SERVICE SPECIFICATIONS

MAINTENANCE (4A–FE)

Engine

Drive belt tension				
w/ Borroughs drive belt tension gauge No. BT–33–73F				
or Nippondenso BTG–20 (95506–00020)	New belt	160 ± 20 lb		
Alternator	Used belt	130 ± 20 lb		
PS	New belt	125 ± 25 lb		
	Used belt	80 ± 20 lb		
A/C	New belt	160 ± 20 lb		
	Used belt	100 ± 20 lb		
Coolant capacity (w/ heater) M/T (Ex. AE92L–ACMXKK		5.6 liters	5.9 US qts	4.9 Imp. qts
M/T (AE92L–ACMXKK)		6.2 liters	6.6 US qts	5.5 Imp. qts
A/T		6.1 liters	6.4 US qts	5.4 Imp. qts
Engine oil capacity Drain and refill				
w/ oil filter– change		3.7 liters	3.9 US qts	3.3 Imp. qts
Spark plug				
Type	ND	Q16R-U		
	NGK	BCPR5EY		
Gap		0.8 mm	0.031 in.	
Firing order		1 – 3 – 4 – 2		
Valve clearance (cold)	Intake	0.15 – 0.25 mm	0.006 – 0.010 in.	
	Exhaust	0.20 – 0.30 mm	0.008 – 0.012 in.	
Idle speed	2WD	700 rpm		
	4WD	800 rpm		

Chassis

Front brake				
Pad thickness	Limit	1.0 mm	0.039 in.	
Disc thickness	Limit	17.0 mm	0.669 in.	
Disc runout	Limit	0.09 mm	0.0035 in.	
Rear brake				
Lining thickness	Limit	1.0 mm	0.039 in.	
Drum inside diameter	Limit	201.0 mm	7.913 in.	
Front axle and suspension				
Ball joint vertical play	Limit	0 mm	0 in.	
Steering wheel freeplay	Limit	30 mm	1.18 in.	
Torque specifications:				
Front seat mounting bolt		375 kg-cm	27 ft-lb	37 N·m
Engine center member		620 kg-cm	45 ft-lb	61 N·m
Front suspension crossmember x Body		2,100 kg-cm	152 ft-lb	206 N·m
Rear suspension member x Body (2W/D only)		760 kg-cm	55 ft-lb	75 N·m

MAINTENANCE (4A–GE)

Engine

Drive belt tension w/ Borroughs drive belt tension gauge No. BT–33–73F or Nippondenso BTG–20 (95506–00420)				
Alternator	New belt	175 ± 15 lb		
	Used belt	115 ± 20 lb		
PS and/or A/C	New belt	175 ± 5 lb		
	Used belt	115 ± 20 lb		
Coolant capacity (w/ heater)		6.0 liters	6.3 US qts	5.3 Imp. qts
Engine oil capacity Drain and refill				
w/ oil filter change		3.7 liters	3.9 US qts	3.3 Imp. qts
Spark plug				
Type	ND	RK20R8		
	NGK	BKR6EP8		
Gap		0.8 mm	0.031 in.	
Firing order		1 – 3 – 4 – 2		
Valve clearance (cold)	Intake	0.15 – 0.25 mm	0.006 – 0.010 in.	
	Exhaust	0.20 – 0.30 mm	0.008 – 0.012 in.	
Idle speed		800 rpm		

Chassis

Front brake					
Pad thickness		Limit	1.0 mm	0.039 in.	
Disc thickness		Limit	21.0 mm	0.827 in.	
Disc runout		Limit	0.09 mm	0.0035 in.	
Rear brake					
Pad thickness		Limit	1.0 mm	0.039 in.	
Disc thickness		Limit	8.0 mm	0.315 in.	
Disc runout	Limit	Front	0.09 mm	0.0035 in.	
		Rear	0.10 mm	0.0039 in.	
Front axle and suspension					
Ball joint vertical play		Limit	0 mm	0 in.	
Steering wheel freeplay		Limit	30 mm	1.18 in.	
Torque specifications:					
Front seat mounting bolt			375 kg-cm	27 ft-lb	37 N·m
Engine center member x Body			620 kg-cm	45 ft-lb	61 N·m
Front suspension crossmember x Body			2,100 kg-cm	152 ft-lb	206 N·m
Rear– suspension member x Body			760 kg-cm	55 ft-lb	75 N·m

ENGINE MECHANICAL (4A–FE)

Specifications

Compression pressure	at 250 rpm		STD	13.5 kg/cm²	191 psi	1,320 kPa
			Limit	10.0 kg/cm²	142 psi	981 kPa
	Differential of pressure between each cylinder			1.0 kg/cm² (14 psi, 98 kPa) or less		
Idler pulley tension spring	Free length			38.4 mm	1.512 in.	
	Installed tension	at 50.2 mm (1.976 in.)		3.6 – 4.0 kg	7.9 – 8.8 lb	35 – 39 N
Cylinder head	Head surface warpage		Limit	0.05 mm	0.0020 in.	
	Manifold surface warpage		Limit	0.10 mm	0.0039 in.	
	Cylinder head thickness			95.3 mm	3.75 in.	
	Valve seat Refacing angle			30°, 45°, 60°		
	Contacting angle			45°		
	Contacting width			1.2 – 1.6 mm	0.047 – 0.063 in.	
	Spark plug tube protrusion height			46.8 – 47.6 mm	1.843 – 1.874 in.	
Valve guide bushing	Inside diameter			6.01 – 6.03 mm	0.2366 – 0.2374 in.	
	Outside diameter		STD	11.000 – 11.027 mm	0.4331 – 0.4341 in.	
			O/S 0.05	11.050 – 11.077 mm	0.4350 – 0.4361 in.	
	Protrusion height			12.7 – 13.1 mm	0.500 – 0.516 in.	
	Replacing temperature (cylinder head side)			80 – 100°C	176 – 212°F	
Valve	Valve overall length	STD	Intake	91.45 mm	3.6004 in.	
			Exhaust	91.90 mm	3.6181 in.	
		Limit	Intake	90.95 mm	3.5807 in.	
			Exhaust	91.40 mm	3.5984 in.	
	Valve face angle			45.5°		
	Stem diameter		Intake	5.970 – 5.985 mm	0.2350 – 0.2356 in.	
			Exhaust	5.965 – 5.980 mm	0.2348 – 0.2354 in.	
	Stem oil clearance	STD	Intake	0.025 – 0.060 mm	0.0010 – 0.0024 in.	
			Exhaust	0.030 – 0.065 mm	0.0012 – 0.0026 in.	
		Limit	Intake	0.08 mm	0.0031 in.	
			Exhaust	0.10 mm	0.0039 in.	
	Valve head edge thickness	Limit		1.0 mm	0.039 in.	
Valve spring	Free length			43.8 mm	1.724 in.	
	Installed length			34.7 mm	1.366 in.	
	Installed load		STD	15.8 kg	34.8 lb	155 N
			Limit	14.6 kg	32.2 lb	143 N
	Squareness		Limit	2.0 mm	0.075 in.	
Valve lifter	Outer diameter		STD	27.975 – 27.985 mm	1.1014 – 1.1018 in.	
	Inner diameter (Cylinder head lifter bore)		STD	28.005 – 28.026 mm	1.1025 – 1.1033 in.	
	Oil clearance		STD	0.020 – 0.051 mm	0.0008 – 0.0020 in.	
			Limit	0.10 mm	0.0039 in.	
Intake and exhaust manifold	Manifold surface warpage	Limit	Intake	0.20 mm	0.0079 in.	
			Exhaust	0.30 mm	0.0118 in.	

Specifications (Cont'd)

Camshaft	Thrust clearance	STD	Intake	0.030 – 0.085 mm	0.0012 – 0.0033 in.
			Exhaust	0.035 – 0.090 mm	0.0014 – 0.0035 in.
		Limit		0.11 mm	0.0043 in.
	Journal oil clearance	STD		0.035 – 0.072 mm	0.0014 – 0.0028 in.
		Limit		0.10 mm	0.0039 in.
	Journal diameter	STD			
		Exhaust No. 1		24.949 – 24.965 mm	0.9822 – 0.9829 in.
		Others		22.949 – 22.965 mm	0.9035 – 0.9041 in.
	Circle runout	Limit		0.04 mm	0.0016 in.
	Cam lobe height	STD	Intake	35.21 – 35.31 mm	1.3862 – 1.3902 in.
			Exhaust	34.91 – 35.01 mm	1.3744 – 1.3783 in.
		Limit	Intake	34.81 mm	1.3705 in.
			Exhaust	34.51 mm	1.3587 in.
	Camshaft gear spring end free distance			17.1 – 17.5 mm	0.6732 – 0.6890 in.
	Camshaft gear backlash		STD	0.020 – 0.200 mm	0.0008 – 0.0079 in.
			Limit	0.30 mm	0.0188 in.
Cylinder block	Cylinder head surface warpage		Limit	0.05 mm	0.0020 in.
	Cylinder bore diameter	STD	Mark "1"	81.00 – 81.01 mm	3.1890 – 3.1894 in.
			Mark "2"	81.01 – 81.02 mm	3.1894 – 3.1898 in.
			Mark "3"	81.02 – 81.03 mm	3.1898 – 3.1902 in.
	On standard sized piston		Limit	81.23 mm	3.1980 in.
	On O/S 0.50 sized piston		Limit	81.73 mm	3.2177 in.
	Cylinder bore wear		Limit	0.2 mm	0.008 in.
	Difference of bore between cylinder			0.05 mm	0.0020 in.
	Taper and out–of–round		Limit	0.02 mm	0.0008 in.
Piston and piston ring	Piston diameter	STD	Mark "1"	80.93 – 80.94 mm	3.1862 – 3.1866 in.
			Mark "2"	80.94 – 80.95 mm	3.1866 – 3.1870 in.
			Mark "3"	80.95 – 80.96 mm	3.1870 – 3.1874 in.
		O/S 0.50		81.43 – 81.46 mm	3.2059 – 3.2071 in.
	Piston to cylinder clearance			0.06 – 0.08 mm	0.0024 – 0.0031 in.
	Piston ring end gap	No. 1	STD	0.25 – 0.45 mm	0.0098 – 0.0177 in.
			Limit	1.05 mm	0.0413 in.
		No. 2	STD	0.15 – 0.40 mm	0.0059 – 0.0157 in.
			Limit	1.00 mm	0.0394 in.
		Oil	STD	0.10 – 0.70 mm	0.0039 – 0.0276 in.
			Limit	1.30 mm	0.0512 in.
	Piston ring groove clearance		No. 1	0.04 – 0.08 mm	0.0016 – 0.0031 in.
			No. 2	0.03 – 0.07 mm	0.0012 – 0.0028 in.
	Piston pin installing temperature			20°C	68°F
Connecting rod	Thrust clearance		STD	0.15 – 0.25 mm	0.0059 – 0.0098 in.
			Limit	0.30 mm	0.0118 in.
	Connecting rod bearing center wall thickness				
		STD	No. 1	1.486 – 1.490 mm	0.0585 – 0.0587 in.
			No. 2	1.490 – 1.494 mm	0.0587 – 0.0588 in.
			No. 3	1.494 – 1.498 mm	0.0588 – 0.0590 in.
		U/S 0.25		1.607 – 1.613 mm	0.0633 – 0.0635 in.

Specifications (Cont'd)

Connecting rod (cont'd)	Bearing oil clearance	STD	0.020 – 0.051 mm	0.0008 – 0.0020 in.
		Limit	0.08 mm	0.0031 in.
	Rod bend	Limit	0.05 mm	0.0020 in.
	Rod twist	Limit	0.05 mm	0.0020 in.
Crankshaft	Thrust clearance	STD	0.02 – 0.22 mm	0.008 – 0.0087 in.
		Limit	0.30 mm	0.0118 in.
	Thrust washer thickness	STD	2.440 – 2.490 mm	0.0961 – 0.0980 in.
	Main journal oil clearance	STD	0.015 – 0.033 mm	0.0006 – 0.0013 in.
		U/S 0.25	0.018 – 0.056 mm	0.0007 – 0.0022 in.
		Limit	0.10 mm	0.0039 in.
	Main journal diameter STD		47.982 – 48.000 mm	1.8891 – 1.8898 in.
	Main journal finished diameter U/S 0.25		47.745 – 47.755 mm	1.8797 – 1.8801 in.
	Main bearing center wall thickness STD	Mark "1"	2.002 – 2.005 mm	0.0788 – 0.0789 in.
		Mark "2"	2.005 – 2.008 mm	0.0789 – 0.0791 in.
		Mark "3"	2.008 – 2.011 mm	0.0791 – 0.0792 in.
		Mark "4"	2.011 – 2.014 mm	0.0792 – 0.0793 in.
		Mark "5"	2.014 – 2.017 mm	0.0793 – 0.0794 in.
	U/S 0.25		2.121 – 2.127 mm	0.0835 – 0.0837 in.
	Crank pin diameter STD		39.985 – 40.000 mm	1.5742 – 1.5748 in.
	Crank pin finished diameter U/S 0.25		39.745 – 39.755 mm	1.5648 – 1.5652 in.
	Circle runout	Limit	0.06 mm	0.0024 in.
	Main journal taper– and out–of–round	Limit	0.02 mm	0.0008 in.
	Crank pin journal taper and out–or–round	Limit	0.02 mm	0.0008 in.

Torque Specifications

Part tightened	kg-cm	ft-lb	N·m
Cylinder head bolt	610	44	60
Cylinder head x Camshaft bearing cap	130	9	13
Cylinder head x Spark plug	180	13	18
Cylinder head x Intake manifold	195	14	19
Cylinder head x Exhaust manifold	250	18	25
Cylinder block x Timing belt idler pulley	375	27	37
Cylinder block x Oil pump	220	16	22
Cylinder block x Crankshaft bearing cap	610	44	60
Cylinder block x Oil pan	50	43 in.-lb	4.9
Camshaft x Camshaft timing pulley	600	43	59
Crankshaft x Crankshaft pulley	1,200	87	118
Crankshaft x Flywheel	800	58	78
Connecting rod cap x Connecting rod	500	36	49
Oil pump x Oil strainer	95	82 in.-lb	9.3

ENGINE MECHANICAL (4A–GE)

Specifications

Compression pressure	at 250 rpm		STD	13.4 kg/cm²	190 psi	1,314 kPa
			Limit	10.0 kg/cm²	142 psi	981 kPa
	Difference of pressure between each cylinder			1.0 kg/cm² (14 psi, 98 kPa) or less		
Idler pulley tension spring	Free length			43.5 mm	1.713 in.	
	Installed tension at 50.2 mm (1.976 in.)			9.47 – 10.47 kg	20.9 – 23.1 lb	93 – 103 N
Cylinder head	warpage Cylinder block side		Limit	0.05 mm	0.0020 in.	
	Intake manifold side		Limit	0.05 mm	0.0020 in.	
	Exhaust manifold side		Limit	0.10 mm	0.0039 in.	
	Valve seat Refacing angle			30°, 45°, 60°		
	Contacting angle			45°		
	Contacting width			1.0 – 1.4 mm	0.039 – 0.055 in.	
Valve guide bushing	Inside diameter			6.01 – 6.03 mm	0.2366 – 0.2374 in.	
	Outside diameter		STD	11.033 – 11.044 mm	0.4344 – 0.4348 in.	
			O/S 0.05	11.083 – 11.094 mm	0.4363 – 0.4368 in.	
	Replacing temperature (Cylinder head side)			80 – 100°C	176 – 212°F	
Valve	Valve overall length	STD	Intake	99.60 mm	3.9213 in.	
			Exhaust	99.75 mm	3.9272 in.	
		Limit	Intake	99.10 mm	3.9016 in.	
			Exhaust	99.25 mm	3.9075 in.	
	Valve face angle			44.5°		
	Stem diameter		Intake	5.970 – 5.985 mm	0.2350 – 0.2356 in.	
			Exhaust	5.965 – 5.980 mm	0.2348 – 0.2354 in.	
	Stem oil clearance	STD	Intake	0.025 – 0.060 mm	0.0010 – 0.0024 in.	
			Exhaust	0.030 – 0.065 mm	0.0012 – 0.0026 in.	
		Limit	Intake	0.08 mm	0.0031 in.	
			Exhaust	0.10 mm	0.0039 in.	
	Margin thickness	STD		0.8 – 1.2 mm	0.031 – 0.047 in.	
		Limit		0.5 mm	0.020 in.	
Valve spring	Free length			41.09 mm	1.6177 in.	
	Installed load	at 34.7 mm (1.366 in.)				
			STD	16.3 kg	35.9 lb	160 N
			Limit	14.6 kg	32.2 lb	143 N
	Squareness		Limit	1.8 mm	0.071 in.	
Valve lifter	Lifter diameter			27.975 – 27.985 mm	1.1014 – 1.1018 in.	
	Inner diameter (Cylinder head lifter bore)		STD	28.005 – 28.026 mm	1.1026 – 1.1034 in.	
	Oil clearance		STD	0.015 – 0.046 mm	0.0005 – 0.0018 in.	
			Limit	0.10 mm	0.0039 in.	
Manifold	Manifold surface warpage	Limit	Intake	0.05 mm	0.0020 in.	
			Exhaust	0.30 mm	0.0118 in.	

Specifications (Cont'd)

Camshaft	Thrust clearance		STD	0.08 – 0.190 mm	0.0031 – 0.0075 in.
			Limit	0.30 mm	0.0118 in.
	Journal oil clearance		STD	0.035 – 0.072 mm	0.0014 – 0.0028 in.
			Limit	0.10 mm	0.0039 in.
	Journal diameter			26.949 – 26.965 mm	1.0610 – 1.0616 in.
	Circle runout		Limit	0.04 mm	0.0016 in.
	Cam lobe height		STD	35.419 – 35.510 mm	1.3823 – 1.3980 in.
			Limit	35.21 mm	1.3862 in.
Cylinder block	Cylinder head surface warpage		Limit	0.05 mm	0.0020 in.
	Cylinder bore diameter	STD	Mark "1"	81.00 – 81.01 mm	3.1890 – 3.1894 in.
			Mark "2"	81.01 – 81.02 mm	3.1894 – 3.1898 in.
			Mark "3"	81.02 – 81.03 mm	3.1898 – 3.1902 in.
	On standard sized piston		Limit	81.23 mm	3.1980 in.
	On O/S 0.50 sized piston		Limit	81.73 mm	3.2177 in.
	Cylinder bore wear		Limit	0.2 mm	0.008 in.
	Difference of bore between cylinder			0.05 mm	0.0020 in.
	Taper and out–of–round		Limit	0.02 mm	0.0008 in.
Piston and piston ring	Piston diameter	STD	Mark "1"	80.89 – 80.90 mm	3.1846 – 3.1850 in.
			Mark "2"	80.90 – 80.91 mm	3.1850 – 3.1854 in.
			Mark "3"	80.91 – 80.92 mm	3.1854 – 3.1858 in.
		O/S 0.50		81.39 – 81.42 mm	3.2043 – 3.2055 in.
	Piston oil clearance			0.10 – 0.12 mm	0.0039 – 0.0047 in.
	Piston ring groove clearance		No. 1	0.03 – 0.08 mm	0.0012 – 0.0031 in.
			No. 2	0.03 – 0.07 mm	0.0012 – 0.0028 in.
	Piston ring end gap	STD	No. 1	0.25 – 0.47 mm	0.0098 – 0.0185 in.
			No. 2	0.20 – 0.42 mm	0.0079 – 0.0165 in.
			Oil	0.15 – 0.52 mm	0.0059 – 0.0205 in.
		Limit	No. 1	1.07 mm	0.0421 in.
			No. 2	1.02 mm	0.0402 in.
			Oil	1.12 mm	0.0441 in.
Connecting rod	Thrust clearance		STD	0.15 – 0.25 mm	0.0059 – 0.0098 in.
			Limit	0.30 mm	0.0118 in.
	Connecting rod oil clearance				
		STD	STD	0.020 – 0.051 mm	0.0008 – 0.0020 in.
			U/S 0.25	0.019 – 0.073 mm	0.0007 – 0.0029 in.
		Limit		0.08 mm	0.0031 in.
	Connecting rod bearing center wall thickness				
		STD	No. 1	1.486 – 1.490 mm	0.0585 – 0.0587 in.
			No. 2	1.490 – 1.494 mm	0.0587 – 0.0588 in.
			No. 3	1.494 – 1.498 mm	0.0588 – 0.0590 in.
			U/S 0.25	1.607 – 1.613 mm	0.0633 – 0.0635 in.
	Rod bent	Limit	per 100 mm (3.94 in.)	0.03 mm	0.0012 in.
	Rod twist	Limit	per 100 mm (3.94 in.)	0.05 mm	0.0020 in.
	Connecting rod bolt		STD	8.860 – 9.000 mm	0.3488 – 0.3543 in.
			Limit	8.600 mm	0.3386 in.

Specifications (Cont'd)

Connecting rod (cont'd)	Bushing inside diameter			20.012 – 20.022 mm	0.7879 – 0.7883 in.
	Piston pin diameter			20.006 – 20.016 mm	0.7876 – 0.7880 in.
	Piston pin oil clearance		STD	0.004 – 0.008 mm	0.0002 – 0.0003 in.
			Limit	0.05 mm	0.0020 in.
Crankshaft	Thrust clearance		STD	0.02 – 0.22 mm	0.0008 – 0.0087 in.
			Limit	0.30 mm	0.0118 in.
	Thrust washer thickness		STD	2.440 – 2.490 mm	0.0961 – 0.0980 in.
	Main journal oil clearance	STD	STD	0.015 – 0.033 mm	0.0006 – 0.0013 in.
			U/S 0.25	0.018 – 0.056 mm	0.0007 – 0.0022 in.
		Limit		0.10 mm	0.0039 in.
	Main journal diameter		STD	47.982 – 48.000 mm	1.8891 – 1.8898 in.
			U/S 0.25	47.745 – 47.755 mm	1.8797 – 1.8801 in.
	Main bearing center wall thickness				
		STD	Mark "1"	2.002 – 2.005 mm	0.0788 – 0.0789 in.
			Mark "2"	2.005 – 2.008 mm	0.0789 – 0.0791 in.
			Mark "3"	2.008 – 2.011 mm	0.0791 – 0.0792 in.
			Mark "4"	2.011 – 2.014 mm	0.0792 – 0.0793 in.
			Mark "5"	2.014 – 2.017 mm	0.0793 – 0.0794 in.
		U/S 0.25		2.121 – 2.127 mm	0.0835 – 0.0837 in.
	Crank pin diameter		STD	41.985 – 42.000 mm	1.6529 – 1.6535 in.
			U/S 0.25	41.745 – 41.755 mm	1.6435 – 1.6439 in.
	Circle runout		Limit	0.06 mm	0.0024 in.
	Main journal taper and out–of–round		Limit	0.02 mm	0.0008 in.
	Crank pin journal taper and out–of–round				
			Limit	0.02 mm	0.0008 in.

Torque Specifications

Part tightened		kg-cm	ft-lb	N-m
Camshaft timing pulley x Camshaft		600	43	59
Idler pulley x Cylinder block		375	27	37
Crankshaft pulley x Crankshaft		1,400	101	137
Cylinder head x Cylinder block	1st	300	22	29
	2nd	90° turns		
	3rd	90° turns		
Oil nozzle x Cylinder block		250	18	25
Cylinder head x Union		300	22	29
Camshaft bearing cap x Cylinder head		130	9	13
Intake manifold x Cylinder head		280	20	27
Intake manifold stay x Intake manifold		220	16	22
Intake manifold stay x Cylinder block		400	29	39
EGR pipe x Exhaust manifold		700	51	69
Exhaust manifold x Cylinder head		250	29	39
Exhaust manifold stay x Exhaust manifold		400	29	39
Exhaust manifold stay x Cylinder block		400	29	39
Main bearing cap x Cylinder block		610	44	60
Connecting rod cap x Connecting rod	1st	400	29	39
	2nd	Additional 90°		
Flywheel x Crankshaft		750	54	74

EFI SYSTEM (4A–FE)

Specifications

Fuel pressure regulator	Fuel pressure	at No vacuum	2.7 – 3.1 kg/cm² (38 – 44 psi, 265 – 304 kPa)	
Cold start injector	Resistance		2 – 4 Ω	
	Fuel leakage		Less than one drop of fuel per minute	
Injector	Resistance		Approx. 13.8 Ω	
	Injection volume		40 – 50 cc/15 sec (2.4 – 3.1 cu in.)	
	Difference between each injector		5 cc (0.31 cu in.) or less	
	Fuel leakage		One drop or less of fuel per minute	
Throttle body	Throttle valve fully closed angle		6°	
Throttle position sensor	Throttle opening angle (from vertical)	Clearance between stop screw and lever	IDL – E2	PSW – E2
	–	0.60 mm (0.0236 in.)	Continuity	No continuity
	–	0.80 mm (0.0315 in.)	No continuity	No continuity
	Less than 7.5°	–	Continuity	No continuity
	73° (M/T), 63° (A/T)	–	No continuity	No continuity
	79° (M/T), 69° (A/T)	–	No continuity	Continuity
Start injector time switch	Resistance	STA – STJ	20 – 40 Ω	Below 30°C (86°F)
			40 – 60 Ω	Above 40°C (104°F)
		STA – Ground	20 – 80 Ω	–
Water temp. sensor and air temp. sensor	Resistance	at –20°C (–4°F)	10 – 20 kΩ	
		0°C (32°F)	4 – 7 kΩ	
		40°C (104°F)	0.9 – 1.3 kΩ	
		60°C (140°F)	0.4 – 0.7 kΩ	
		80°C (176°F)	0.2 – 0.4 kΩ	

HINT:
1. Perform all voltage and resistance measurements with the computer connected.
2. Verify that the battery voltage is 11 V or above when the ignition switch is ON.
3. The testing probes must not make contact with the computer OX and VF terminals.

Terminal	STD voltage	Condition	
+ B – E1	10 – 14	Ignition switch ON	
+ B1 – E1			
BATT – E1		–	
IDL – E2	10 – 14	Ignition switch ON	Throttle valve open
PSW – E2			Throttle valve fully closed
No. 10 – E01 No. 20 – E02	10 – 14	Ignition switch ON	
W – E1	0	Ignition switch ON	
	10 – 14	Engine start	

Specifications (Cont'd)

Terminal	STD voltage	Condition	
PIM – E2	3.3 – 3.9	Ignition switch ON	
VCC – E2	4.5 – 5.5		
THA – E2	2.0 – 2.5	Ignition switch ON	Intake air temperature 20 ˚C (68˚F)
THW – E2	0.4 – 0.7		Coolant temperature 80 ˚C (176 ˚ F)
STA – E1	6 – 14	Cranking	
IGT – E1	0.7 – 1.0	Idling	
A/C – E1	5 – 14	Ignition switch ON	A/C switch ON
	0		A/C switch OFF
T – E1	10 – 14	Ignition switch ON	Check connector TE 1 – E 1 not connect
	0		Check connector– TE 1 – E 1 connect

Terminal	Condition	Resistance
IDL – E2	Throttle valve open	Infinity
	Throttle valve fully closed	0
PSW – E2	Throttle valve fully open	0
	Throttle valve fully closed	Infinity
THA – E2	Intake temperature 20 ˚C (68˚F)	2 – 3 kΩ
THW – E2	Coolant temperature 80 ˚C (176˚F)	0.2 – 0.4 kΩ
G1 – G ⊖	–	140 – 180 Ω
NE – G ⊖	–	140 – 180 Ω

Fuel cut rpm	Fuel cut rpm	1,800 rpm (A/C OFF)	2,500 rpm (A/C ON)
	Fuel return rpm	1,200 rpm (A/C OFF)	1,700 rpm (A/C ON)

Torque Specifications

Part tightened	kg-cm	ft-lb	N-m
Pressure regulator x Delivery pipe	95	82 in.-lb	9.3
Fuel inlet pipe x Delivery pipe	300	22	29
Cold start injector pipe x Delivery pipe	180	13	18
Cold start injector pipe x Cold start injector	180	13	18
Fuel tank band x Fuel tank	400	29	39
Fuel inlet pipe x Fuel tank	35	30 in.-lb	3.4
Fuel pump x Fuel tank	40	35 in.-lb	3.9
Fuel sender gauge x Fuel tank	15	13 in.-lb	1.5
Drain plug	130	9	13

EFI SYSTEM (4A–GE)

Specifications

Fuel pressure regulator	Fuel pressure	at No vacuum	2.7 – 3.1 kg/cm² (38 – 44 psi, 265 – 304 kPa)
Cold start injector	Resistance		3 – 5 Ω
	Fuel leakage		Less than one drop of fuel per minute
Injector	Resistance		Approx. 13.8 Ω
	Injection volume		50 – 53 cc/15 sec (3.1 – 3.2 cu in.)
	Difference between each injector		5 cc (0.31 cu in.) or less
	Fuel leakage		One drop or less of fuel per minute
Throttle body	Throttle valve fully closed angle		6°

Throttle position sensor	Clearance between stop screw and lever	Between terminals	Resistance
	0.35 mm 0.0138 in.	IDL – E2	Less than 2.3 kΩ
	0.59 mm 0.0232 in.	IDL – E2	Infinity
	Throttle valve fully opened position	VTA – E2	3.3 – 10 kΩ
	–	VCC – E2	3 – 7 kΩ

Start injector time switch	Resistance	STA – STJ	20 – 40 Ω	Below 30°C (86°F)
			40 – 60 Ω	Above 40°C (104°F)
		STA – Ground	20 – 80 Ω	–
Air flow meter	Resistance	VS – E2	20 – 400 Ω (Measuring plate fully closed)	
			20 – 3,000 Ω (Measuring plate fully open)	
		VC – E2	100 – 300 Ω	
		FC – E1	∞ (Measuring plate closed)	
			0 (Measuring plate open)	
		THA – E2	10 – 20 kΩ (–20°C, –4°F)	
			4 – 7 kΩ (0°C, 32°F)	
			2 – 3 kΩ (20°C, 68°F)	
			0.9 – 1.3 kΩ (40°C, 104°F)	
			0.4 – 0.7 kΩ (60°C, 140°F)	
		VB – E2	200 – 400 Ω	
Water temp. sensor and air temp. sensor	Resistance	at –20°C (–4°F)	10 – 20 kΩ	
		0°C (32°F)	4 – 7 kΩ	
		40°C (104°F)	0.9 – 1.3 kΩ	
		60°C (140°F)	0.4 – 0.7 kΩ	
		80°C (176°F)	0.2 – 0.4 kΩ	
Oxygen sensor	Heater resistance	at 20°C (68°F)	4.95 – 6.05Ω (Federal and Canada)	
			5.1 – 6.3 (California)	
EG R gas temp. sensor	Resistance	at 50°C (112°F)	69.40 – 88.50 kΩ	
		100°C (212°F)	11.89 – 14.37 kΩ	
		150°C (302°F)	2.79 – 3.59 kΩ	

Specifications (Cont'd)

HINT:
1. Perform all voltage and resistance measurements with the computer connected.
2. Verify that the battery voltage is 11 V or above when the ignition switch is ON.
3. The testing probes must not make contact with the computer OX and VF terminals.

Terminal	STD voltage	Condition	
BATT – E1	10 – 14	–	
+B – E1		Ignition switch ON	
+B1 – E1			
IDL – E1	10 – 14	Ignition switch ON	Throttle valve open
VC – E1	6 – 10	Ignition switch ON	–
VTA – E2	0.1 – 1.0		Throttle valve fully closed
	4 – 5		Throttle valve fully open
VCC – E2	4 – 6	Ignition switch ON	
VS – E2	2 – 5.5	Ignition switch ON	Measuring plate fully closed
	6 – 9		Measuring plate fully open
	2 – 8	Idling	
THA – E2	1 – 3	Ignition switch ON	Intake air temperature 20 0 C (68˚ F)
THW – E2	0.1 – 1.0		Coolant temperature 80 ˚C (176˚ F)
STA – E1	6 – 14	Cranking	
No. 10 – E01 No. 20 – E02	10 – 14	Ignition switch ON	
IGT – E1	0.7 – 1.0	Idling	
T – E1	10 – 14	Ignition switch ON	Check connector TE1 – E1 not connect
	0.5 or less		Check connector– TE1 – E1 connect
A/C – E1	5 – 14	Ignition switch ON	A/C switch ON
	0.5 or less		A/C switch OFF
W – E1	0.5 or less	Ignition switch ON	
	10 – 14	Engine start	

Specifications (Cont'd)

Terminal	Condition	Resistance
IDL – E2	Throttle valve open	Infinity
	Throttle valve fully closed	Less than 2.3 kΩ
VTA – E2	Throttle valve fully open	3.3 – 10 kΩ
	Throttle valve fully closed	0.2 – 0.8 kΩ
VC – E2	–	100 – 300 Ω
VS – E2	Measuring plate fully closed	20 – 400 Ω
	Measuring plate fully open	20 – 3,000 Ω
VCC – E2	–	3 – 7 kΩ
THA – E2	Intake air temperature 20 ˚C (68˚ F)	2 – 3 kΩ
THW – E2	Coolant temperature 80 ˚C (176˚F)	0.2 – 0.4 kΩ
G ⊕ – G ⊖	–	140 – 180 Ω

Fuel cut rpm w/ Vehicle speed 0 km/h, coolant temperature 80˚C (176˚F) and A/C switch off	Fuel cut rpm Fuel return rpm	1,600 (A/C OFF) 1,200 (A/C OFF)	1,900 (A/C ON) 1,500 (A/C ON)

Torque Specifications

Part tightened	kg-cm	ft-lb	N·m
Pressure regulator x Delivery pipe	75	65 in.-lb	7.4
Fuel inlet pipe x Delivery pipe	300	22	29
Cold start injector pipe x Delivery pipe	180	13	18
Cold start injector pipe x Cold start injector	180	13	18
Fuel tank band x Fuel tank	400	29	39
Fuel inlet pipe x Fuel tank	35	30 in.-lb	3.4
Fuel pump x Fuel tank	35	30 in.-lb	3.4
Fuel sender gauge x Fuel tank	15	13 in.-lb	1.5
Drain plug	130	9	13

COOLING SYSTEM

Coolant capacity (w/ heater)					
4A– F E		M/T(Ex. AE92–ACM X K K)	5.6 liters	5.9 US qts	4.9 Imp. qts
		M/T(AE92L–ACMXKK)	6.2 liters	6.6 US qts	5.5 Imp. qts
		A/T	6.1 liters	6.4 US qts	5.4 Imp. qts
	4A–GE		6.0 liters	6.3 US qts	5.3 Imp. qts
Radiator	Relief valve opening pressure	STD	0.75 – 1.05 kg/cm² (10.7 – 14.9 psi, 74 – 103 kPa)		
		Limit	0.6 kg/cm²	8.5 psi	59 kPa
Thermostat	Valve opening temperature				
	Starts to open at		80 – 84°C	176 – 183°F	
	Fully opens at		95°C	203°F	
	Valve opening travel		8 mm (0.31 in.) or more		

LUBRICATION SYSTEM

Oil pressure (normal operating temperature)				
	at Idle speed		More than 0.3 kg/cm² (4.3 psi, 29 kPa)	
	at 3,000 rpm		2.5 – 5.0 kg/cm² (35.6 – 71.1 psi, 245 – 490 kPa)	
Oil pump	4A–FE			
	Body clearance	STD	0.080 –0.180 mm	0.0031 – 0.0071 in.
		Limit	0.20 mm	0.0079 in.
	Tip clearance	STD	0.025 – 0.085 mm	0.0010 – 0.0033 in.
		Limit	0.35 mm	0.0138 in.
	Side clearance	STD	0.025 – 0.085 mm	0.0010 – 0.0033 in.
		Limit	0.10 mm	0.0039 in.
	4A–GE			
	Body clearance	STD	0.100 – 0.191 mm	0.0039 – 0.0075 in.
		Limit	0.20 mm	0.0079 in.
		STD	0.060 – 0.180 mm	0.0023 – 0.0071 in.
		Limit	0.35 mm	0.0138 in.
	Side clearance	STD	0.025 – 0.075 mm	0.0010 – 0.0030 in.
		Limit	0.10 mm	0.0039 in.

IGNITION SYSTEM (4A–FE)

Ignition timing	T/ M i n N range		10° BTDC @ Idling (Check connector TE1 – E1 connect)
Spark plug	Type	ND NGK	Q16R-U BCPR5EY
	Gap		0.8 mm 0.031 in.
Firing order			1 – 3 – 4 – 2
High–tension cord	Resistance		25 kΩ per cord or less
Ignition coil	Primary coil resistance Secondary coil resistance		1.28 – 1.56 Ω 10.4 – 14.0 kΩ
Distributor	Signal generator resistance	G1 – G ⊖ NE – G ⊖	140 – 180 Ω 140 – 180 Ω

IGNITION SYSTEM (4A–GE)

Ignition timing	T/ M i n N range		10° BTDC @ Idling (Check connector TE1 – E1 connect)
Spark plug	Type	ND NGK	PK20R8 BKR6EP8
	Gap		0.8 mm 0.031 in.
Firing order			1 – 3 – 4 – 2
High–tension cord	Resistance		25 kΩ per cord less
Ignition coil	Primary coil resistance Secondary coil resistance		0.4 – 0.5 Ω 10.2 – 13.8 kΩ
Distributor	Signal generator resistance	G ⊕ – G ⊖ NE ⊕ – NE ⊖	140 – 180 Ω 140 – 180 Ω

STARTING SYSTEM

Reduction type starter	Rating voltage and output power		12V, 1.0 kW	12V, 1.4 kW
	No–load characteristic at 11.5V	Current	Less than 90A	Less than 90A
		rpm	More than 3,000 rpm	More than 3,500 rpm
	Brush length	STD	13.5 mm 0.531 in.	15.5 mm 0.610 in.
		Limit	8.5 mm 0.335 in.	←
	Commutator			
	Outer diameter	STD	30 mm 1.18 in.	←
		Limit	29 mm 1.14 in.	←
	Undercut depth	STD	0.6 mm 0.024 in.	←
		Limit	0.2 mm 0.008 in.	←
	Circle runout	Limit	0.05 mm 0.002 in.	←
	Spring installed load	STD	1,785 – 2,415 g (3.9 – 5.3 lb, 18 – 24 N)	←

CHARGING SYSTEM

Battery specific gravity When fully charged at 20˚C (68˚F) Delco			1.25 – 1.27 Green dot visible	
Alternator	Rated output ampere		70 A	
	Rotor coil resistance		2.8 – 3.0 Ω	
	Slip ring diameter	STD	14.2 – 14.4 mm	0.559 – 0.567 in.
		Limit	12.8 mm	0.504 in.
	Brush exposed length	STD	10.5 mm	0.413 in.
		Limit	1.5 mm	0.059 in.
Alternator regulator (IC)	Regulating voltage	at 25°C (77°F)	13.9 – 15.1 V	
		at 115°C (239°F)	13.5 – 14.3 V	

CLUTCH

Specifications

Pedal height (from asphalt sheet)		145 – 155 mm	5.71 – 6.10 in.
Push rod play at pedal top		1.0 – 5.0 mm	0.039 – 0.197 in.
Pedal freeplay		5.0 – 15.0 mm	0.197 – 0.591 in.
Clutch release point (from full stroke and position)		25 mm (0.98 in.) or more	
Release fork end play		Non-adjustable type	
Disc rivet head depth	Limit	0.3 mm	0.012 in.
Disc runout	Limit	0.8 mm	0.031 in.
Diaphragm spring out of alignment	Limit	0.5 mm	0.020 in.
Diaphragm spring finger wear Depth	Limit	0.6 mm	0.024 in.
Width	Limit	5.0 mm	0.197 in.
Flywheel runout	Limit	0.1 mm	0.004 in.

Torque Specifications

Part tightened		kg-cm	ft-lb	N·m
Clutch line union .		155	11	15
Master cylinder set nut		130	9	13
Clutch pedal setting nut		250	18	25
Release cylinder set bolt		120	9	12
Clutch cover x Flywheel		195	14	19
Bleeder plug x Release cylinder		85	75 in.-lb	8.3
Release fork support	2WD	375	27	37
	4WD	480	35	47

MANUAL TRANSAXLE (C50 and C52)

Specifications

Input shaft				
Roller bearing journal diameter		Limit	24.970 mm	0.9831 in.
3rd gear journal diameter		Limit	30.970 mm	1.2193 in.
4th gear journal diameter		Limit	26.470 mm	1.0421 in.
5th gear journal diameter		Limit	24.870 mm	0.9791 in.
Runout		Limit	0.05 mm	0.0020 in.
Output shaft				
Roller bearing journal diameter		Limit	32.970 mm	1.2980 in.
1st gear journal diameter		Limit	37.970 mm	1.4949 in.
2nd gear journal diameter		Limit	31.970 mm	1.2587 in.
Runout		Limit	0.05 mm	0.0020 in.
Gear thrust clearance	1st	STD	0.10 – 0.40 mm	0.0039 – 0.0157 in.
		Limit	0.45 mm	0.0177 in.
	2nd	STD	0.10 – 0.45 mm	0.0039 – 0.0177 in.
		Limit	0.50 mm	0.0197 in.
	3rd	STD	0.10 – 0.35 mm	0.0039 – 0.0138 in.
		Limit	0.40 mm	0.0157 in.
	4th	STD	0.10 – 0.55 mm	0.0039 – 0.0217 in.
		Limit	0.60 mm	0.0236 in.
	5th	STD	0.10 – 0.57 mm	0.0039 – 0.0224 in.
		Limit	0.65 mm	0.0256 in.
Gear oil clearance				
1st, 2nd, 3rd, 4th and 5th		STD	0.015 – 0.058 mm	0.0006 – 0.0023 in.
		Limit	0.070 mm	0.0028 in.
Shift fork to hub sleeve clearance		Limit	1.0 mm	0.039 in.
Synchronizer ring to gear clearance		Limit	0.6 mm	0.024 in.
Oil seal drive in depth				
Speedometer driven gear			25 mm	0.98 in.
Input shaft snap ring thickness				
No. 2 clutch hub		Mark		
		0	2.30 mm	0.0906 in.
		1	2.36 mm	0.0929 in.
		2	2.42 mm	0.0953 in.
		3	2.48 mm	0.0976 in.
		4	2.54 mm	0.1000 in.
		5	2.60 mm	0.1024 in.
Input rear bearing		Mark		
		A	2.29 mm	0.0902 in.
		B	2.35 mm	0.0925 in.
		C	2.41 mm	0.0949 in.
		D	2.47 mm	0.0972 in.
		E	2.53 mm	0.0996 in.
		F	2.59 mm	0.1020 in.

Specifications (Cont'd)

Output shaft snap ring thickness				
No. 1 clutch hub	Mark			
	A	2.50 mm	0.0984 in.	
	B	2.56 mm	0.1008 in.	
	C	2.62 mm	0.1031 in.	
	D	2.68 mm	0.1055 in.	
	E	2.74 mm	0.1079 in.	
	F	2.80 mm	0.1102 in.	
No. 3 clutch hub	Mark			
	A	2.25 mm	0.0886 in.	
	B	2.31 mm	0.0909 in.	
	C	2.37 mm	0.0933 in.	
	D	2.43 mm	0.0957 in.	
	E	2.49 mm	0.0980 in.	
	F	2.55 mm	0.1004 in.	
	G	2.61 mm	0.1028 in.	
Side bearing preload				
(at starting)	New bearing	8 – 16 kg-cm	6.9 – 13.9 in.-lb	0.8 – 1.6 N·m
	Reused bearing	5 – 10 kg-cm	4.3 – 8.7 in.-lb	0.5 – 1.0 N·m
Pinion to side gear backlash		0.05 – 0.20 mm	0.0020 – 0.0079 in.	
Side gear thrust washer thickness		0.95 mm	0.0374 in.	
		1.00 mm	0.0394 in.	
		1.05 mm	0.0413 in.	
		1.10 mm	0.0433 in.	
		1.15 mm	0.0453 in.	
		1.20 mm	0.0472 in.	
Side bearing adjusting shim thickness	Mark			
	A	2.10 mm	0.0827 in.	
	B	2.15 mm	0.0846 in.	
	C	2.20 mm	0.0866 in.	
	D	2.25 mm	0.0886 in.	
	E	2.30 mm	0.0906 in.	
	F	2.35 mm	0.0925 in.	
	G	2.40 mm	0.0945 in.	
	H	2.45 mm	0.0965 in.	
	J	2.50 mm	0.0984 in.	
	K	2.55 mm	0.1004 in.	
	L	2.60 mm	0.1024 in.	
	M	2.65 mm	0.1043 in.	
	N	2.70 mm	0.1063 in.	
	P	2.75 mm	0.1083 in.	
	Q	2.80 mm	0.1102 in.	
	R	2.85 mm	0.1122 in.	
	S	2.90 mm	0.1142 in.	
	T	2.95 mm	0.1161 in.	
	U	3.00 mm	0.1181 in.	
Shift lever vertical play		0.15 mm	0.0059 in.	

Torque Specifications

	Part tightened		kg-cm	ft-lb	N·m
C50 and C52 transmissions	Transmission case x Transaxle case		300	22	29
	Transmission case x Case cover		185	13	18
	Transmission case protector		130	9	13
	Rear bearing retainer		195	14	19
	Output shaft bearing lock plate		115	8	11
	5th driven gear lock nut		1,200	87	118
	Reverse idler shaft lock bolt		300	22	29
	Reverse shift arm bracket		175	13	17
	Oil receiver pipe		175	13	17
	Shift fork x Set bolt		160	12	16
	Reverse restrict pin holder		200	14	20
	Shift and select lever shaft lock bolt		300	22	29
	Filler plug		400	29	39
	Drain plug		400	29	39
	Back–up light switch		410	30	40
	Front bearing retainer		110	8	11
	Speedometer driven gear lock plate		115	8	11
	Straight screw plug (shift fork shaft)		250	18	25
	Lock ball assembly		400	29	39
	Control shaft cover bolt		200	14	20
	Transaxle x Engine	12 mm bolt	650	47	64
		10 mm bolt	470	34	46
	Transaxle x Rear end plate	10 mm bolt	240	17	24
		8 mm bolt	115	8	11
	Ball joint x Lower arm		650	47	64
	Transaxle x Starter		400	29	39
	Engine mounting center member x Body		620	45	61
	Engine mounting center member x Mounting		620	45	61
	Front mounting insulator bolt		800	58	78
	Exhaust pipe x Exhaust manifold		630	46	62
	Exhaust pipe x Converter		440	32	43
	Exhaust pipe clamp bolt		195	14	19
	Bond cable x Body		195	14	19
	Release cylinder x Transaxle		120	9	12
Differential	Ring gear x Differential case		985	71	97

MANUAL TRANSAXLE (E55F5 and E57F5)

Specifications

TRANSMISSION ASSEMBLY				
Input shaft				
Roller bearing journal diameter		Limit	32.930 mm	1.2964 in.
3rd gear journal diameter		Limit	35.950 mm	1.4154 in.
4th gear journal diameter		Limit	35.950 mm	1.4154 in.
Runout		Limit	0.060 mm	0.0024 in.
Output shaft				
1st gear journal diameter		Limit	43.950 mm	1.7303 in.
2nd gear bushing diameter		Limit	44.950 mm	1.7697 in.
Runout		Limit	0.060 mm	0.0024 in.
Gear thrust clearance	1st	STD	0.10 – 0.35 mm	0.0039 – 0.0138 in.
		Limit	0.40 mm	0.0157 in.
	2nd	STD	0.10 – 0.45 mm	0.0039 – 0.0177 in.
		Limit	0.50 mm	0.0197 in.
	3rd	STD	0.10 – 0.35 mm	0.0039 – 0.0138 in.
		Limit	0.40 mm	0.0157 in.
	4th	STD	0.10 – 0.55 mm	0.0039 – 0.0217 in.
		Limit	0.60 mm	0.0236 in.
	5th	STD	0.10 – 0.57 mm	0.0039 – 0.0224 in.
		Limit	0.65 mm	0.0256 in.
Gear oil clearance				
1st and 4th gear		STD	0.009 – 0.051 mm	0.0004 – 0.0020 in.
		Limit	0.080 mm	0.0031 in.
2nd and 3rd gear		STD	0.009 – 0.053 mm	0.0004 – 0.0021 in.
		Limit	0.080 mm	0.0031 in.
5th gear		STD	0.009 – 0.050 mm	0.0004 – 0.0020 in.
		Limit	0.070 mm	0.0028 in.
Shift fork to hub sleeve clearance		Limit	1.0 mm	0.039 in.
Synchronizer ring to gear clearance		Limit	0.6 mm	0.024 in.
Oil pump assembly				
Rotor body clearance		STD	0.10 – 0.16 mm	0.0039 – 0.0063 in.
		Limit	0.30 mm	0.0118 in.
Rotor tip clearance		STD	0.08 – 0.15 mm	0.0031 – 0.0059 in.
		Limit	0.30 mm	0.0118 in.
Side clearance		STD	0.03 – 0.08 mm	0.0012 – 0.0031 in.
		Limit	0.15 mm	0.0059 in.
Input shaft snap ring thickness				
No. 2 clutch hub		Mark		
		H	2.30 – 2.35 mm	0.0906 – 0.0925 in.
		J	2.35 – 2.40 mm	0.0925 – 0.0945 in.
		K	2.40 – 2.45 mm	0.0945 – 0.0965 in.
		L	2.45 – 2.50 mm	0.0965 – 0.0984 in.
		M	2.50 – 2.55 mm	0.0984 – 0.1004 in.
		N	2.55 – 2.60 mm	0.1004 – 0.1024 in.
		P	2.60 – 2.65 mm	0.1024 – 0.1043 in.

Specifications (Cont'd)

Input shaft snap ring thickness (cont'd)				
4th gear and rear bearing	Mark			
	1	2.35 – 2.40 mm		0.0925 – 0.0945 in.
	2	2.40 – 2.45 mm		0.0945 – 0.0965 in.
	3	2.45 – 2.50 mm		0.0965 – 0.0984 in.
	4	2.50 – 2.55 mm		0.0984 – 0.1004 in.
	5	2.55 – 2.60 mm		0.1004 – 0.1024 in.
	6	2.60 – 2.65 mm		0.1024 – 0.1043 in.
	7	2.65 – 2.70 mm		0.1043 – 0.1063 in.
	8	2.70 – 2.75 mm		0.1063 – 0.1083 in.
DIFFERENTIAL ASSEMBLY				
Differential side bearing preload (at starting)				
	New bearing	3.2 – 6.3 kg	7.1 – 13.9 lb	31.4 – 61.8 N
	Reused bearing	2.0 – 4.0 kg	4.4 – 8.8 lb	19.6 – 39.2 N
No. 1 case bushing inner diameter	STD	104.000 – 104.035 mm		4.0945 – 4.0959 in.
	Limit	104.060 mm		4.0968 in.
No. 2 case bushing inner diameter	STD	97.000 – 97.035 mm		3.8189 – 3.8203 in.
	Limit	97.060 mm		3.8213 in.
Front case outer diameter				
No. 1 case side	STD	103.929 – 103.964 mm		4.0917 – 4.0931 in.
	Limit	103.850 mm		4.0886 in.
No. 2 case side	STD	96.929 – 96.964 mm		3.8161 – 3.8175 in.
	Limit	96.850 mm		3.8130 in.
Conical spring washer height				
For No. 1 case	STD	1.85 – 2.05 mm		0.073 – 0.081 in.
	Limit	1.75 mm		0.069 in.
For No. 2 case	STD	2.60 – 2.80 mm		0.102 – 0.110 in.
	Limit	2.50 mm		0.098 in.
Differential No. 1 case backlash		0.05 – 0.20 mm		0.0020 – 0.0079 in.
Front differential case backlash		0.05 – 0.20 mm		0.0020 – 0.0079 in.
Differential No. 2 case thrust clearance		0.17 – 0.26 mm		0.0067 – 0.0102 in.
Front differential case thrust clearance		0.155 – 0.250 mm		0.0061 – 0.0098 in.
Thrust washer thickness				
For No. 1 case side gear		0.80 mm		0.0315 in.
		0.85 mm		0.0335 in.
		0.90 mm		0.0354 in.
		0.95 mm		0.0374 in.
		1.00 mm		0.0394 in.
		1.05 mm		0.0413 in.
		1.00 mm		0.0433 in.
		1.15 mm		0.0453 in.
		1.20 mm		0.0472 in.
		1.25 mm		0.0492 in.
		1.30 mm		0.0512 in.
		1.35 mm		0.0531 in.
		1.40 mm		0.0551 in.

Specifications (Cont'd)

Thrust washer thickness (cont'd)			
For front case side gear	Mark		
	B	1.00 mm	0.0394 in.
	C	1.05 mm	0.0413 in.
	D	1.10 mm	0.0433 in.
	E	1.15 mm	0.0453 in.
	F	1.20 mm	0.0472 in.
	G	1.25 mm	0.0492 in.
For No. 2 case side gear	Mark		
	A	0.95 mm	0.0374 in.
	B	1.00 mm	0.0394 in.
	C	1.05 mm	0.0413 in.
	D	1.10 mm	0.0433 in.
	E	1.15 mm	0.0453 in.
	F	1.20 mm	0.0472 in.
	G	1.25 mm	0.0492 in.
	H	1.30 mm	0.0512 in.
	J	1.35 mm	0.0531 in.
	K	1.40 mm	0.0551 in.
For No. 2 case and front case		0.80 mm	0.0315 in.
		0.85 mm	0.0335 in.
		0.90 mm	0.0354 in.
		0.95 mm	0.0374 in.
		1.00 mm	0.0394 in.
		1.05 mm	0.0413 in.
		1.10 mm	0.0433 in.
		1.15 mm	0.0453 in.
		1.20 mm	0.0472 in.
		1.25 mm	0.0492 in.
		1.30 mm	0.0512 in.
		1.35 mm	0.0531 in.
		1.40 mm	0.0551 in.
Shim thickness			
For differential side bearing preload	Mark		
	0	2.00 mm	0.0787 in.
	1	2.05 mm	0.0807 in.
	2	2.10 mm	0.0827 in.
	3	2.15 mm	0.0846 in.
	4	2.20 mm	0.0866 in.
	5	2.25 mm	0.0886 in.
	6	2.30 mm	0.0906 in.
	7	2.35 mm	0.0925 in.
	8	2.40 mm	0.0945 in.
	9	2.45 mm	0.0965 in.
	A	2.50 mm	0.0984 in.
	B	2.55 mm	0.1004 in.
	C	2.60 mm	0.1024 in.
	D	2.65 mm	0.1043 in.
	E	2.70 mm	0.1063 in.

Specifications (Cont'd)

Shim thickness (cont'd)				
For differential side bearing preload (cont'd)	Mark			
	F	2.75 mm		0.1083 in.
	G	2.80 mm		0.1102 in.
	H	2.85 mm		0.1122 in.
TRANSFER ASSEMBLY				
Ring gear runout	Limit	0.1 mm		0.004 in.
Ring gear mounting case runout	Limit	0.1 mm		0.004 in.
Ring gear backlash		0.13 – 0.18 mm		0.0051 – 0.0071 in.
Driven pinion preload (at starting)	New bearing	1.8 – 2.9 kg	4.0 – 6.4 lb	17.6 – 28.4 N
Transfer total preload (at starting)	Reused bearing	0.9 – 1.4 kg	2.0 – 3.1 lb	8.8 – 13.7 N
(Add driven pinion preload)				
Adjusting shim thickness		0.5 – 0.9 kg	1.1 – 2.0 lb	4.9 – 8.8 N
For ring gear backlash	Mark			
	1	2.13 mm		0.0839 in.
	2	2.16 mm		0.0850 in.
	3	2.19 mm		0.0862 in.
	4	2.22 mm		0.0874 in.
	5	2.25 mm		0.0886 in.
	6	2.28 mm		0.0898 in.
	7	2.31 mm		0.0909 in.
	8	2.34 mm		0.0921 in.
	9	2.37 mm		0.0933 in.
	10	2.40 mm		0.0945 in.
	11	2.43 mm		0.0957 in.
	12	2.46 mm		0.0968 in.
	13	2.49 mm		0.0980 in.
	14	2.52 mm		0.0992 in.
	15	2.55 mm		0.1004 in.
	16	2.58 mm		0.1016 in.
	17	2.61 mm		0.1028 in.
	18	2.64 mm		0.1039 in.
	19	2.67 mm		0.1051 in.
	20	2.70 mm		0.1063 in.
	21	2.73 mm		0.1075 in.
	22	2.76 mm		0.1087 in.
	23	2.79 mm		0.1098 in.
	24	2.82 mm		0.1110 in.
For tooth contact	Mark			
	A	0.30 mm		0.0118 in.
	B	0.33 mm		0.0130 in.
	C	0.36 mm		0.0142 in.
	D	0.39 mm		0.0154 in.
	E	0.42 mm		0.0165 in.
	F	0.45 mm		0.0177 in.
	G	0.48 mm		0.0189 in.
	H	0.51 mm		0.0201 in.
	J	0.54 mm		0.0213 in.
	K	0.57 mm		0.0224 in.

Torque Specifications

Part tightened		kg-cm	ft-lb	N·m
Oil pump x Cover		105	8	10
Ring gear x Differential case		1,260	91	124
Rear bearing retainer x Transmission case		430	31	42
Transmission case x Transaxle case		300	22	29
Oil pump assembly x Transaxle case		175	13	17
Shift fork x Shaft		240	17	24
Oil pipe x Housing		175	13	17
Transaxle case x Transaxle case receiver		75	65 in.-lb	7.4
Transmission case x Transmission case cover		300	22	29
Shift and select lever shaft assembly x Transmission case		200	14	20
Bellcrank x Transmission case		200	14	20
Back–up light switch x Transmission case		410	30	40
Drive pinion x Bearing cage		See page MT–110		
Ring gear x Ring gear mounting case		985	71	97
Driven pinion cage x Transfer case		400	29	39
Transfer left case x Transfer right case		450	33	44
Transfer case x Inspection hole cover		160	12	16
Differential lock sleeve x Shift fork		160	12	16
Transfer right case x Transfer case cover		175	13	17
Driven pinion cage x Extension housing		260	19	25
Transaxle assembly x. Transfer assembly		700	51	69
Differential lock indicator switch		400	29	39
Filler plug		500	36	49
Drain plug		500	36	49
Oil cooler pipe X Elbow		350	25	34
Elbow x Transaxle		275	20	27
Lock bolt x Transaxle case		500	36	49
Breezer plug x Transmission case		500	36	49
No. 1 and No. 2 oil receiver pipe X Transmission case		175	13	17
Reverse idler gear retaining bolt		300	22	29
Transmission case x Plug (for shift fork shaft)		250	18	25
(for reverse restrict pin)		130	9	13
Speedometer cable adopter		175	13	17
Oil tube x Transfer left case		130	9	13
Transfer left case x Plug	(Large)	400	29	39
	(Small)	250	18	25
Transfer case x Actuator bracket		380	27	37
Transaxle assembly x Engine	M12 bolt	650	47	64
	M10 bolt	470	34	46
Drive shaft x Rotor disc		1,900	137	186
Tie rod end x Steering knuckle		500	36	49
PS pump x Pump bracket		400	29	39
Engine mounting insulator x Bracket		890	64	87
Engine mounting insulator bracket x Transaxle		790	57	77
Engine mounting insulator bracket x Member		490	35	48
Starter x Transaxle		400	29	39
Transaxle x Stiffener plate	10 mm bolt	380	27	37
	8 mm bolt	200	14	20

Torque Specifications (Cont'd)

Part tightened	kg-cm	ft-lb	N·m
Exhaust manifold x Exhaust front pipe	630	46	62
Exhaust front pipe x Exhaust center pipe	440	32	43
Lower arm x Ball joint	1,450	105	142
Engine mounting insulator LH x Engine mounting insulator LH bracket	490	35	48
Engine mounting insulator– LH bracket x Transaxle	530	38	52
Engine mounting insulator RH x Engine Nut	530	38	52
Bolt	650	47	64
Transfer vacuum actuator bracket x Stiffener plate 10 mm bolt	380	27	37
Engine mounting insulator LH x Transaxle	210	15	21
Engine mounting insulator RH x RH bracket	430	31	42
Protector x Transaxle	250	18	25

AUTOMATIC TRANSAXLE (A131L)

Automatic Transmission Specifications

Governor pressure		
Counter drive gear	(Vehicle speed reference)	
1,000	(approx. 30 km/h, 19 mph)	0.4 – 1.2 kg/cm² (5.7 – 17 psi, 39 – 118 kPa)
1,800	(approx. 54 km/h, 34 mph)	1.4 – 22 kg/cm² (20 – 31 psi, 137 – 216 kPa)
3,500	(approx. 104 km/h, 65 mph)	3.8 – 4.6 kg/cm² (54 – 65 psi, 373 – 451 kPa)
Line pressure		
Engine idling	D range	3.7 – 4.3 kg/cm² (53 – 61 psi, 363 – 422 kPa)
	R range	5.4 – 7.2 kg/cm² (77 – 102 psi, 530 – 706 kPa)
At stall	D range	9.2 – 10.7 kg/cm² (131 – 152 psi, 902 – 1,049 kPa)
	R range	14.4 – 16.8 kg/cm² (205 – 239 psi, 1,412 – 1,648 kPa)
Engine stall revolution		2,350 ± 150 rpm
Time lag	N range → D range	Less than 1.2 seconds
	N range → R range	Less than 1.5 seconds
Engine idle speed (Cooling fan and A/C OFF)		650 – 750 rpm
Speedometer driven gear oil seal drive in depth		19 mm 0.75 in.
Throttle cable adjustment (Throttle valve fully opened)		Between boot end face and inner cable stopper 0 – 1 mm 0 – 0.04 in.
Input shaft thrust play		0.3 – 0.9 mm 0.012 – 0.035 in.

Specifications (Cont'd)

Drive plate runout	Limit	Less than 0.20 mm (0.0079 in.)
Torque converter runout	Limit	Less than 0.30 mm (0.0118 in.)
Torque converter correct distance		23.0 mm 0.906 in.

Shift point km/h (mph)	Differential gear ratio	D range (Throttle valve fully open) *Throttle valve is closed.						L range
		1→2	2→3	*Lock-up ON	*Lock-up OFF	3→2	2→1	2→1
	3.526	53 – 69 (33 – 43)	102 – 118 (63 – 73)	71 – 80 (44 – 50)	66 – 75 (41 – 47)	96 – 115 (60 – 71)	38 – 48 (24 – 30)	41 – 51 (25 – 32)
	3.722*	50 – 65 (31 – 40)	97 – 112 (60 – 70)	67 – 75 (42 – 47)	62 – 71 (39 – 44)	91 – 109 (57 – 68)	36 – 46 (22 – 29)	39 – 49 (24 – 30)

* : OPT for– U.S.A.

Valve body spring mm (in.)		Free length	Coil outer diameter	No. coils	Color
	Upper valve body				
	Throttle modulator valve	21.7 (0.854)	9.5 (0.374)	9.5	None
	Accumulator control valve	33.2 (1.307)	10.4 (0.409)	13.5	None
	Low coast modulator valve	23.4 (0.921)	7.9 (0.311)	11.5	Red
	Down shift plug	29.8 (1.173)	8.7 (0.343)	13.5	White
	2nd coast modulator valve	20.9 (0.823)	8.5 (0.335)	10	Light Green
	Throttle valve	30.7 (1.209)	9.2 (0.362)	9.5	None
	Lock–up relay valve	26.6 (1.047)	10.2 (0.402)	11.5	White
	Lower valve body (AISI N A.W)				
	Primary regulator valve	66.7 (2.626)	18.6 (0.732)	12.5	Purple
	1–2 shift valve	27.2 (1.071)	6.4 (0.252)	15.5	Yellow
	Detent regulator valve	29.1 (1.146)	7.9 (0.311)	12.5	Orange
	2–3 shift valve	27.7 (1.091)	8.3 (0.327)	11	None
	Lock–up signal valve	31.4 (1.236)	8.0 (0.318)	14.3	Light Blue
	Secondary regulator valve	43.6 (1.717)	10.9 (0.429)	11.5	None
	Pressure relief valve	11.2 (0.441)	6.4 (0.252)	7.5	None
	Cooler– by–pass valve	19.9 (0.783)	11.0 (0.433)	8.5	None
	Lower– valve body (TOYOTA)				
	Primary regulator valve	66.7 (2.626)	18.6 (0.732)	12.5	Purple
	1–2 shift valve	27.2 (1.071)	6.4 (0.252)	15.5	Yellow
	Detent regulator valve	29.7 (1.169)	7.9 (0.311)	12.5	Gray
	2–3 shift valve	27.7 (1.091)	8.3 (0.327)	11	None
	Lock–up signal valve	31.4 (1.236)	8.0 (0.318)	14.3	Light Blue
	Secondary regulator valve	43.6 (1.717)	10.9 (0.429)	11.5	None
	Pressure relief valve	11.2 (0.441)	6.4 (0.252)	7.5	None
	Cooler by–pass valve	19.9 (0.783)	11.0 (0.433)	8.5	None
Accumulator piston spring mm (in.)	B2 (Center)	35.18 (1.3850)	–	–	Yellow
		56.68 (2.2315)	–	–	Yellow
	C1 (Transaxle rear cover side)	48.00 (1.8898)	–	–	Red
		81.09 (3.1925)	–	–	Yellow Green
	C2 (Torque converter side)	74.54 (2.9346)	–	–	Blue

Specifications (Cont'd)

Oil pump	Side clearance		STD	0.02 – 0.05 mm	0.0008 – 0.0020 in.
			Limit	0.1 mm	0.004 in.
	Body clearance		STD	0.07 – 0.15 mm	0.0028 – 0.0059 in.
			Limit	0.3 mm	0.012 in.
	Tip clearance	Driven gear	STD	0.11 – 0.14 mm	0.0043 – 0.0055 in.
			Limit	0.3 mm	0.012 in.
Clutch piston stroke	Forward clutch (C1)			1.11 – 1.47 mm	0.0437 – 0.0579 in.
	Direct clutch (C2)			1.37 – 1.70 mm	0.0539 – 0.0669 in.
Brake piston stroke	Second coast brake (B1)			1.5 – 3.0 mm	0.059 – 0.118 in.

Bushing mm (in.)	Bushing		Finished bore	Bore limit
	Stator support	Front	21.500 – 21.526 (0.8465 – 0.8475)	21.576 (0.8494)
		Rear	27.000 – 27.026 (1.0630 – 1.0640)	27.076 (1.0660)
	Oil pump body		38.113 – 38.138 (1.5005 – 1.5015)	38.188 (1.5035)
	Direct clutch drum		47.000 – 47.025 (1.8504 – 1.8514)	47.075 (1.8533)
	Front planetary ring gear flange		19.025 – 19.050 (0.7490 – 0.7500)	19.100 (0.7520)
	Input sun gear (Front and Rear)		22.025 – 22.046 (0.8671 – 0.8680)	22.096 (0.8699)

Front planetary pinion gear thrust clearance	STD	0.2 – 0.5 mm	0.008 – 0.020 in.
	Limit	0.5 mm	0.020 in.
Rear planetary pinion gear thrust clearance	STD	0.2 – 0.5 mm	0.008 – 0.0020 in.
	Limit	0.5 mm	0.020 in.

Torque Specifications

Part tightened		kg-cm	ft-lb	N·m
Engine mounting		530	38	52
Transaxle case x Engine	12 mm	650	47	64
Drive plate x Crankshaft	10 mm	470	34	46
Torque converter x Drive plate		650	47	64
Oil pump x Transaxle case		280	20	27
Oil pump body x Stator shaft		225	16	22
Second coast brake band guide		100	7	10
Upper valve body x Lower valve body		55	48 in.-lb	5.4
Valve body		55	48 in.-lb	5.4
Accumulator cover		100	7	10
Oil strainer		100	7	10
Oil pan		100	7	10
Oil pan drain plug		50	43 in.-lb	4.9
Cooler pipe union nut		500	36	49
Testing plug		275	20	27
Parking lock pawl bracket		75	65 in.-lb	7.4
Transaxle rear cover x Transaxle case		75	65 in.-lb	7.4
Neutral start switch x Transaxle case (bolt)		250	18	25
Neutral start switch (nut)		55	48 in.-lb	5.4
Ball joint x Lower arm		70	61 in.-lb	6.9
		1,450	105	142

Torque Specifications (Cont'd)

Part tightened	kg-cm	ft-lb	N-m
Lower– crossmember x Body	2,100	152	206
Center member x Body	620	45	61
Center member x Transaxle mounting bracket	490	35	48
Exhaust pipe x Exhaust manifold	630	46	62

Differential Specifications

Side bearing preload (at Starting)				
	New bearing	10 – 16 kg-cm	8.7 – 13.9 in.-lb	1.0 – 1.6 N·m
	Reused bearing	5 – 8 kg-cm	4.3 – 6.9 in.-lb	0.5 – 0.8 N·m
Drive pinion preload (at Starting)				
	New bearing	10 – 16 kg-cm	8.7 – 13.9 in.-lb	1.0 – 1.6 N·m
	Reused bearing	5 – 8 kg-cm	4.3 – 6.9 in.-lb	0.5 – 0.8 N·m
Total preload (at Starting)		Add drive pinion preload		
	New bearing	2.6 – 4.3 kg-cm	2.3 – 3.7 in.-lb	0.3 – 0.4 N·m
	Reused bearing	1.3 – 2.2 kg-cm	1.1 – 1.9 in.-lb	0.1 – 0.2 N·m
Pinion to side gear backlash		0.05 – 0.20 mm	0.0020 – 0.0079 in.	
Side gear thrust washer thickness		0.95 mm	0.0374 in.	
		1.00 mm	0.0394 in.	
		1.05 mm	0.0413 in.	
		1.10 mm	0.0433 in.	
		1.15 mm	0.0453 in.	
		1.20 mm	0.0472 in.	
Side bearing adjusting shim thickness		1.60 mm	0.0630 in.	
		1.65 mm	0.0650 in.	
		1.70 mm	0.0669 in.	
		1.75 mm	0.0689 in.	
		1.80 mm	0.0709 in.	
		1.85 mm	0.0728 in.	
		1.90 mm	0.0748 in.	
		1.95 mm	0.0768 in.	
		2.00 mm	0.0787 in.	
		2.05 mm	0.0807 in.	
		2.10 mm	0.0827 in.	
		2.15 mm	0.0846 in.	
		2.20 mm	0.0866 in.	
		2.25 mm	0.0886 in.	
		2.30 mm	0.0906 in.	
		2.35 mm	0.0925 in.	
		2.40 mm	0.0945 in.	
		2.45 mm	0.0965 in.	
		2.50 mm	0.0984 in.	
		2.55 mm	0.1004 in.	
		2.60 mm	0.1024 in.	
		2.65 mm	0.1043 in.	

Torque Specifications

Part tightened	kg-cm	ft-lb	N-m
Ring gear– x Differential case	985	71	97
Side bearing cap	500	36	49
Side bearing retainer	195	14	19
Drive pinion nut	1,750 – 2,950	127 – 213	172 – 289
Differential carrier cover	250	18	25
Filler plug	400	29	39
Drain plug	400	29	39

AUTOMATIC TRANSAXLE (A240L)

Automatic Transmission Specifications

Governor pressure				
Differential drive pinion rpm (Vehicle speed reference)				
800 (28 km/h, 17 mph)		0.5 – 1.3 kg/cm²	7.1 – 18 psi	49 – 127 kPa
1,600 (57 km/h, 35 mph)		1.8 – 2.6 kg/cm²	26 – 37 psi	177 – 255 kPa
2,400 (85 km/h, 53 mph)		3.3 – 4.1 kg/cm²	47 – 58 psi	324 – 402 kPa
Line pressure				
Engine idling	D range	3.7 – 4.3 kg/cm²	53 – 61 psi	363 – 422 kPa
	R range	5.4 – 7.2 kg/cm²	77 – 102 psi	530 – 706 kPa
At stall	D range	9.2 – 10.7 kg/cm²	131 – 152 psi	902 – 1,049 kPa
	R range	14.4 – 16.8 kg/cm²	205 – 239 psi	1,412 – 1,648 kPa
Engine stall revolution		2,700 ± 150 rpm		
Time lag	N range → D range	Less than 1.2 seconds		
	N range → R range	Less than 1.5 seconds		
Engine idle speed (Cooling fan and A/C OFF)		650 – 750 rpm		
Speedometer driven gear oil seal drive in depth		19 mm	0.75 in.	0.75 in.
Throttle cable adjustment (Throttle valve fully opened)		Between boot end face and inner cable stopper		
		0 – 1 mm		0 – 0.04 in.
Input shaft thrust play		0.3 – 0.9 mm		0.112 – 0.035 in.
Drive plate runout	Limit	Less than 0.20 mm (0.0079 in.)		
Torque converter runout	Limit	Less than 0.30 mm (0.0118 in.)		
Torque converter correct distance		23 mm		0.906 in.

Shift point km/h (mph)	Differential gear ratio	D range (Throttle valve fully open) * Throttle valve is closed								L range
		1 → 2	2 → 3	3 → OD	Lock-up ON	Lock-up OFF	OD → 3	3 → 2	2 → 1	2 → 1
	2.962	45–61 (28–38)	90–105 (56–65)	*30–46 (19–29)	*69–77 (43–48)	*65–73 (40–45)	*15–28 (9–17)	85–103 (53–64)	33–44 (21–27)	41–53 (25–33)

Specifications (Cont'd)

			Free length	Coil outer diameter	No. coils	Color
Valve body spring mm (in.)	Upper valve body					
	Primary regulator valve		66.7 (2.626)	18.6 (0.732)	12.5	Purple
	Lock–up relay valve		18.8 (0.740)	5.1 (0.201)	14.5	None
	2nd coast modulator valve		29.6 (1.165)	8.3 (0.327)	12.5	Red
	Down shift plug		29.8 (1.173)	8.7 (0.343)	13.5	White
	Throttle valve		29.2 (1.145)	9.2 (0.362)	9.5	Light Green
	Throttle modulator valve		29.9 (1.177)	9.0 (0.354)	15.5	Green
	Accumulator control valve		35.9 (1.413)	10.0 (0.394)	11.5	Blue
	Lower valve body					
	3–4 shift valve		27.7 (1.091)	8.3 (0.327)	11.0	None
	1–2 shift valve		27.2 (1.070)	6.4 (0.252)	15.5	Yellow
	Secondary regulator valve		27.4 (1.079)	11.0 (0.433)	11.5	Blue
	2–3 shift valve		27.7 (1.092)	8.3 (0.327)	11.0	None
	Low modulator valve		29.2 (1.148)	8.3 (0.327)	12.5	None
	Lock–up signal valve		35.7 (1.406)	8.1 (0.319)	14.5	Yellow
	Detent regulator valve		32.0 (1.313)	8.3 (0.327)	15.5	Pink
	3–4 switch valve		30.9 (1.217)	7.0 (0.276)	18.5	None
	Cooler by–pass valve		18.3 (0.719)	12.0 (0.472)	6.5	Yellow
	Pressure relief valve		11.2 (0.441)	6.4 (0.252)	7.5	None
Accumulator piston spring mm (in.)	B_2	No. 1	35.18 (1.3850)	–	–	Yellow
		No. 2	56.68 (2.2315)	–	–	Yellow
	C_1	Inner	42.50 (1.6732)	–	–	None
		Outer	71.10 (2.7992)	–	–	White
	C_2		63.50 (2.5000)	–	–	Orange
	C_3		64.72 (2.5480)	–	–	Red and Yellow

Oil pump	Side clearance		STD	0.02 – 0.05 mm	0.0008 – 0.0020 in.
			Limit	0.1 mm	0.004 in.
	Body clearance		STD	0.07 – 0.15 mm	0.0028 – 0.0059 in.
			Limit	0.3 mm	0.012 in.
	Tip clearance	Driven gear	STD	0.11 – 0.14 mm	0.0043 – 0.0055 in.
			Limit	0.3 mm	0.012 in.
Clutch piston stroke	Forward clutch (C1)			1.42 – 1.81 mm	0.0559 – 0.0713 in.
	Direct clutch (C2)			1.37 – 1.70 mm	0.0539 – 0.0669 in.
	Underdrive clutch (C3)			1.50 – 1.86 mm	0.0591 – 0.0732 in.
Brake piston stroke	Second coast brake (B1)			1.5 – 3.0 mm	0.059 – 0.118 in.

Specifications (Cont'd)

Bushing mm (in.)	Bushing		Finished bore	Bore limit
	Stator– support	Front	21.500 – 21.526 (0.8465 – 0.8475)	21.576 (0.8494)
		Rear	27.000 – 27.026 (1.0630 – 1.0640)	27.076 (1.0660)
	Oil pump body		38.113 – 38.138 (1.5005 – 1.5015)	38.188 (1.5035)
	Direct clutch drum		47.000 – 47.025 (1.8504 – 1.8514)	47.075 (1.8533)
	Front planetary ring gear flange		19.025 – 19.050 (0.7490 – 0.7500)	19.100 (0.7520)
	Input sun gear (Front and Rear)		22.025 – 22.046 (0.8671 – 0.8680)	22.096 (0.8699)
	Under drive clutch drum	Front	46.500 – 46.525 (1.8307 – 1.8317)	46.570 (1.8335)
		Rear	55.000 – 55.030 (2.1654 – 2.1665)	55.080 (2.1685)
	Planetary sun gear		29.800 – 29.825 (1.1732 – 1.1742)	29.870 (1.1760)
Flange thickness	Direct clutch		3.00 mm	0.1181 in.
			3.37 mm	0.1327 in.
	Underdrive clutch		2.04 mm	0.0803 in.
			2.40 mm	0.0945 in.
	Forward clutch		3.00 mm	0.1181 in.
			3.37 mm	0.1327 in.
Intermediate shaft protrusion length (Reference)			254 mm	10.0 in.
Second coast piston rod length			71.4 mm	2.811 in.
			72.9 mm	2.870 in.
Counter– shaft	End play		0.23 – 0.89 mm	0.0091 – 0.0350 in.
	Height		33.3 – 35.5 mm	1.311 – 1.398 in.
	Starting torque	w/ spring tension gauge	1.2 – 2.0 kg	2.6 – 4.4 lb
		w/ torque gauge	6 – 10 kg-cm	5.2 – 8.7 in.-lb 0.6 – 1.0 N·m
Front planetary pinion gear thrust clearance		STD	0.2 – 0.5 mm	0.008 – 0.020 in.
		Limit	0.5 mm	0.020 in.
Rear planetary pinion gear thrust clearance		STD	0.2 – 0.5 mm	0.008 – 0.020 in.
Under–drive planetary pinion gear thrust clearance		Limit	0.5 mm	0.020 in.
		STD	0.2 – 0.5 mm	0.008 – 0.020 in.
		Limit	0.5 mm	0.020 in.

Torque Specifications

Part tightened		kg-cm	ft-lb	N·m
Engine mounting		530	38	52
Transaxle housing x Engine	12 mm	650	47	64
	10 mm	470	34	46
Drive plate x Crank shaft		650	47	64
Torque converter x Drive plate		280	20	37
Oil pump x Transaxle case		225	16	22
Oil pump body x Stator shaft		100	7	10
Second coast brake band guide		55	48 in.-lb	5.4
Upper valve body x Lower valve body		65	56 in.-lb	6.4
Valve body		100	7	10
Accumulator cover		100	7	10

Torque Specifications (Cont'd)

Part tightened	kg-cm	ft-lb	N·m
Oil strainer	100	7	10
Oil pan	50	43 in.-lb	4.9
Oil pan drain plug	175	13	17
Cooler pipe union nut x Union elbow	350	25	34
Union elbow x Transaxle case	275	20	27
Testing plug	75	65 in.-lb	7.4
Parking lock pawl bracket	75	65 in.-lb	7.4
Transaxle rear cover x Transaxle case	300	22	29
Neutral start switch x Transaxle case	55	48 in.-lb	5.4
Neutral start switch	70	61 in.-lb	6.9
Ball joint x Lower arm	1,450	105	142
Lower crossmember x Body	2,100	152	206
Center member x Body	620	45	61
Center member x Transaxle mounting bracket	620	45	61
Exhaust pipe x Exhaust manifold	630	46	62

Differential Specifications

Side bearing preload (at Starting)	New bearing	8 – 14 kg-cm	6.9 – 12.2 in.-lb	0.8 – 1.4 N·m
	Reused bearing	4 – 7 kg-cm	3.5 – 6.1 in.-lb	0.4 – 0.7 N·m
Pinion to side gear backlash		0.05 – 0.20 mm	0.0020 – 0.0079 in.	
Side gear thrust washer thickness		0.95 mm	0.0374 in.	
		1.00 mm	0.0394 in.	
		1.05 mm	0.0413 in.	
		1.10 mm	0.0433 in.	
		1.15 mm	0.0453 in.	
		1.20 mm	0.0472 in.	
Side bearing adjusting shim thickness		2.00 mm	0.0787 in.	
		2.05 mm	0.0807 in.	
		2.10 mm	0.0827 in.	
		2.15 mm	0.0846 in.	
		2.20 mm	0.0866 in.	
		2.25 mm	0.0886 in.	
		2.30 mm	0.0906 in.	
		2.35 mm	0.0925 in.	
		2.40 mm	0.0945 in.	
		2.45 mm	0.0965 in.	
		2.50 mm	0.0984 in.	
		2.55 mm	0.1004 in.	
		2.60 mm	0.1024 in.	
		2.65 mm	0.1043 in.	
		2.70 mm	0.1063 in.	
		2.75 mm	0.1083 in.	
		2.80 mm	0.1102 in.	
		2.85 mm	0.1122 in.	
		2.90 mm	0.1142 in.	

Torque Specifications

Part tightened	kg-cm	ft-lb	N·m
Ring gear– x Differential case	985	71	97
Transaxle housing x Transmission case	300	22	29

AUTOMATIC TRANSAXLE (A241H)

Automatic Transmission Specifications

Governor pressure				
Drive pinion rpm (Vehicle speed reference)				
800 (28 km/h, 17 mph)		0.9 – 1.7 kg/cm²	13 – 24 psi	88 – 167 kPa
1,600 (57 km/h, 35 mph)		1.8 – 2.6 kg/cm²	26 – 37 psi	177 – 255 kPa
2,400 (85 km/h, 53 mph)		3.3 – 4.1 kg/cm²	47 – 58 psi	324 – 402 kPa
Line pressure				
Engine idling	D range	3.7 – 4.3 kg/cm²	53 – 61 psi	363 – 422 kPa
	R range	5.4 – 7.2 kg/cm²	77 – 102 psi	530 – 706 kPa
At stall	D range	9.2 – 10.7 kg/cm²	131 – 152 psi	902 – 1,049 kPa
	R range	14.4 – 16.8 kg/cm²	205 – 239 psi	1,412–1,648 kPa
Engine stall revolution		2,350 ± 150 rpm		
Time lag	N range → D range	Less than 1.2 seconds		
	N range → R range	Less than 1.5 seconds		
Engine idle speed (Cooling fan and A/C OFF)		750 – 900 rpm		
Speedometer driven gear oil seal drive in depth		19 mm	0.75 in.	
Throttle cable adjustment (Throttle valve fully opened)		Between boot end face and inner cable stopper		
		0 – 1 mm	0 – 0.04 in.	
Input shaft thrust play		0.3 – 0.9 mm	0.012 – 0.035 in.	
Drive plate runout	Limit	Less than 0.20 mm (0.0079 in.)		
Torque converter runout	Limit	Less than 0.30 mm (0.0118 in.)		
Torque converter correct distance		23.0 mm	0.906 in.	

Shift point km/h (mph)	D range (Throttle valve fully open) * Throttle valve is closed								L range
	1 → 2	2 → 3	3 → OD	Lock-up ON	Lock-up OFF	OD → 3	3 → 2	2 → 1	2 → 1
	45–61 (28–38)	90–105 (56–65)	*18–31 (11–19)	*66–76 (42–47)	*62–72 (39–45)	*14–25 (9–16)	83–101 (52–63)	38–46 (24–29)	41–53 (25–33)

Valve body spring mm (in.)	Free length	Coil outer diameter	No. coils	Color
Upper valve body				
Primary regulator valve	66.7 (2.626)	18.6 (0.732)	12.5	Purple
Lock–up relay valve	18.8 (0.740)	5.1 (0.201)	14.5	None
2nd coast modulator– valve	32.6 (1.283)	8.3 (0.327)	12.5	Blue
Down shift plug	29.3 (1.154)	8.7 (0.343)	12.0	Pink
Throttle valve	29.2 (1.150)	9.2 (0.362)	9.5	Light green
Throttle modulator valve	29.9 (1.177)	9.0 (0.354)	15.5	Green
Accumulator– control valve	38.2 (1.504)	10.0 (0.394)	11.5	Yellow
No. 2 pressure regulator valve	29.4 (1.157)	7.5 (0.295)	12.0	Red

Specifications (Cont'd)

			Free length	Coil outer diameter	No. coils	Color
Valve body spring (cont'd) mm (in.)	Lower valve body					
	Secondary regulator		27.4 (1.079)	11.0 (0.433)	11.5	Blue
	1–2 shift valve		27.2 (1.071)	6.4 (0.252)	15.5	Yellow
	Low modulator valve		29.2 (1.150)	8.3 (0.327)	12.5	None
	2–3 shift valve		27.7 (1.091)	8.3 (0.327)	11.0	None
	Cooler by–pass valve		18.3 (0.720)	12.0 (0.472)	6.5	Yellow
	Pressure relief valve		11.2 (0.441)	6.4 (0.252)	7.5	None
	3–4 shift valve		34.9 (1.374)	8.2 (0.323)	13.5	None
	Lock–up signal valve		41.4 (1.630)	8.2 (0.323)	14.5	White
	Detent regulator valve		32.0 (1.260)	8.3 (0.327)	15.5	Brown
	3–4 switch valve		30.9 (1.217)	7.0 (0.276)	18.5	None
Accumulator piston spring mm (in.)	B_2	No. 1	36.5 (1.437)	–	–	White
		No. 2	56.7 (2.232)	–	–	Yellow
	C_1	Inner	41.0 (1.614)	–	–	Pink
		Outer	74.1 (2.917)	–	–	Pink
	C_2		66.2 (2.606)	–	–	Blue
	C_3		62.1 (2.445)	–	–	Light Green

Oil pump	Side clearance		STD	0.02 – 0.05 mm	0.0008 – 0.0020 in.
			Limit	0.1 mm	0.004 in.
	Body clearance		STD	0.07 – 0.15 mm	0.0028 – 0.0059 in.
			Limit	0.3 mm	0.012 in.
	Tip clearance	Driven gear	STD	0.11 – 0.14 mm	0.0043 – 0.0055 in.
			Limit	0.3 mm	0.012 in.
Clutch piston stroke	Forward clutch (C1)			1.42 – 1.81 mm	0.0559 – 0.0713 in.
	Direct clutch (C2)			1.13 – 1.50 mm	0.0445 – 0.0591 in.
	Underdrive clutch (C3)			1.50 – 1.86 mm	0.0591 – 0.0732 in.
Brake piston stroke	Second coast brake (B1)			1.5 – 3.0 mm	0.059 – 0.118 in.

	Bushing		Finished bore	Bore limit
Bushing mm (in.)	Stator support	Front	21.500 – 21.526 (0.8465 – 0.8475)	21.576 (0.8494)
		Rear	27.000 – 27.026 (1.0630 – 1.0640)	27.076 (1.0660)
	Oil pump body		38.113 – 38.138 (1.5005 – 1.5015)	38.188 (1.5035)
	Direct clutch drum		47.000 – 47.025 (1.8504 – 1.8514)	47.075 (1.8533)
	Front planetary ring gear flange		19.025 – 19.050 (0.7490 – 0.7500)	19.100 (0.7520)
	Input sun gear		22.025 – 22.046 (0.8671 – 0.8680)	22.096 (0.8699)
	Under drive clutch drum	Front	46.500 – 46.525 (1.8307 – 1.8317)	46.570 (1.8335)
		Rear	55.000 – 55.030 (2.1654 – 2.1665)	55.080 (2.1685)
	Planetary sun gear		29.800 – 29.825 (1.1732 – 1.1742)	29.870 (1.1760)

Specifications (Cont'd)

Flange thickness	Direct clutch		3.00 mm	0.1181 in.	
			3.37 mm	0.1327 in.	
	Underdrive clutch		2.04 mm	0.0803 in.	
			2.40 mm	0.0945 in.	
	Forward clutch		3.00 mm	0.1181 in.	
			3.37 mm	0.1327 in.	
Intermediate shaft protrusion length (Reference)			254 mm	10.0 in.	
Second coast piston rod length			71.4 mm	2.811 in.	
			72.9 mm	2.870 in.	
Counter shaft	End play		0.23 – 0.89 mm	0.0091 – 0.0350 in.	
	Height		33.3 – 35.5 mm	1.311 – 1.398 in.	
	Starting torque	w/ spring tension gauge	1.2 – 2.0 kg	2.6 – 4.4 lb	
		w/ torque gauge	6 – 10 kg-cm	5.2 – 8.7 in.-lb	0.6 – 1.0 N·m
Front planetary pinion gear thrust clearance		STD	0.2 – 0.5 mm	0.008 – 0.020 in.	
		Limit	0.5 mm	0.020 in.	
Rear planetary pinion gear thrust clearance		STD	0.2 – 0.5 mm	0.008 – 0.020 in.	
		Limit	0.5 mm	0.020 in.	
Underdrive planetary pinion gear thrust clearance		STD	0.2 – 0.5 mm	0.008 – 0.020 in.	
		Limit	0.5 mm	0.020 in.	

Torque Specifications

Part tightened		kg-cm	ft-lb	N·m
Transaxle housing x Engine	12 mm	650	47	64
	10 mm	470	34	46
Drive plate x Crankshaft		650	47	64
Torque converter x Drive plate		280	20	37
Oil pump x Transaxle case		225	16	22
Oil pump body x Stator shaft		100	7	10
No. 2 pressure regulator valve body x Upper valve body		65	56 in.-lb	6.4
Upper valve body x Lower valve body		65	56 in.-lb	6.4
Valve body		100	7	10
Detent spring		100	7	10
Oil tube bracket		100	7	10
Oil pan		50	43 in.-lb	4.9
Oil pan drain plug		175	13	17
Union elbow x Transaxle case		275	20	27
Testing plug		75	65 in.-lb	7.4
Par–king lock pawl stopper plate		75	65 in.-lb	7.4
Transaxle rear cover x Transaxle case		300	22	29
Transaxle case x Transaxle housing		300	22	29
Neutral start switch x Transaxle case		55	48 in.-lb	5.4
Neutral start switch		70	61 in.-lb	6.9
Counter shaft lock nut		1,610 – 1,970	116 – 142	157 – 193
Driven gear lock nut		1,600	116	157

Differential and Transfer Specifications

Differential side bearing preload (at starting)				
	New bearing	2.5 – 4.4 kg	5.5 – 9.7 lb	24.5 – 43.1 N
	Reused bearing	1.3 – 2.2 kg	2.9 – 4.9 lb	12.7 – 21.6 N
Transfer driven pinion preload (at starting)		0.9 – 1.4 kg	2.0 – 3.1 lb	8.8 – 13.7 N
w/ Transfer (Add driven pinion preload)				
	New bearing	1.3 – 1.4 kg	2.9 – 3.1 lb	12.7 – 13.7 N
	Reused bearing	0.5 – 0.9 kg	1.1 – 2.0 lb	4.9 – 8.8 N
Drive pinion bearing cage preload (at starting)				
	New bearing	1.8 – 2.9 kg	4.0 – 6.4 lb	17.7 – 28.4 N
	Reused bearing	0.9 – 1.4 kg	2.0 – 3.1 lb	8.8 – 13.7 N
Backlash				
Differential side gear		0.05 – 0.20 mm	0.0020 – 0.0079 in.	
Center differential		0.13 – 0.18 mm	0.0051 – 0.0071 in.	
Transfer ring gear		0.13 – 0.18 mm	0.0051 – 0.0071 in.	
Differential end play		0.18 – 0.82 mm	0.0071 – 0.0323 in.	
Center differential case thrust clearance	STD	0.18 – 0.63 mm	0.0071 – 0.0248 in.	
Oil seal depth				
Transfer left case		3 mm	0.12 in.	
Transfer right case	Left side	0 mm	0 in.	
	Right side	0 mm	0 in.	
Extension housing		0.1 – 0.9 mm	0.004 – 0.035 in.	
Differential side thrust washer	Mark			
	51	2.00 mm	0.0787 in.	
	B	2.05 mm	0.0807 in.	
	C	2.10 mm	0.0827 in.	
	D	2.15 mm	0.0846 in.	
	E	2.20 mm	0.0866 in.	
	54	2.25 mm	0.0886 in.	
	G	2.30 mm	0.0906 in.	
	H	2.35 mm	0.0925 in.	
	J	2.40 mm	0.0945 in.	
	K	2.27 mm	0.0894 in.	
	57	2.30 mm	0.0906 in.	
	M	2.33 mm	0.0917 in.	
	N	2.36 mm	0.0929 in.	
	P	2.39 mm	0.0941 in.	
	Q	2.42 mm	0.0953 in.	
	60	2.45 mm	0.0965 in.	
	61	2.50 mm	0.0984 in.	
	62	2.55 mm	0.1004 in.	
	63	2.60 mm	0.1024 in.	
	64	2.65 mm	0.1043 in.	
	65	2.70 mm	0.1063 in.	
	66	2.75 mm	0.1083 in.	
	67	2.80 mm	0.1102 in.	
	68	2.85 mm	0.1122 in.	

Specifications (Cont'd)

Conical spring washer	Mark		
	A	1.00 mm	0.0394 in.
	B	1.05 mm	0.0413 in.
	C	1.10 mm	0.0433 in.
	D	1.15 mm	0.0453 in.
	E	1.20 mm	0.0472 in.
	F	1.25 mm	0.0492 in.
	G	1.30 mm	0.0512 in.
	H	1.35 mm	0.0531 in.
	J	1.40 mm	0.0551 in.
	K	1.45 mm	0.0571 in.
	L	1.50 mm	0.0591 in.
Center differential side gear thrust washer	Mark		
	A	1.00 mm	0.0394 in.
	B	1.05 mm	0.0413 in.
	C	1.10 mm	0.0433 in.
	D	1.15 mm	0.0453 in.
	E	1.20 mm	0.0472 in.
	F	1.25 mm	0.0492 in.
	G	1.30 mm	0.0512 in.
	H	1.35 mm	0.0531 in.
	J	1.40 mm	0.0551 in.
Transfer left case side plate washer	Mark		
	71	2.13 mm	0.0839 in.
	72	2.16 mm	0.0850 in.
	73	2.19 mm	0.0862 in.
	74	2.22 mm	0.0874 in.
	75	2.25 mm	0.0886 in
	76	2.28 mm	0.0898 in
	77	2.31 mm	0.0909 in.
	78	2.34 mm	0.0921 in.
	79	2.37 mm	0.0933 in.
	80	2.40 mm	0.0945 in.
	81	2.43 mm	0.0957 in.
	82	2.46 mm	0.0969 in.
	83	2.49 mm	0.0980 in.
	84	2.52 mm	0.0992 in.
	85	2.55 mm	0.1004 in.
	86	2.58 mm	0.1016 in.
	87	2.61 mm	0.1028 in.
	88	2.64 mm	0.1039 in.
	89	2.67 mm	0.1051 in.
	90	2.70 mm	0.1063 in.
	91	2.73 mm	0.1075 in.
	92	2.76 mm	0.1087 in.
	93	2.79 mm	0.1098 in.
	94	2.82 mm	0.1110 in.

Specifications (Cont'd)

Transfer ring gear adjusting shim	Mark		
	A	0.30 mm	0.0118 in.
	B	0.33 mm	0.0130 in.
	C	0.36 mm	0.0142 in.
	D	0.39 mm	0.0154 in.
	E	0.42 mm	0.0165 in.
	F	0.45 mm	0.0177 in.
	G	0.48 mm	0.0189 in.
	H	0.51 mm	0.0201 in.
	J	0.54 mm	0.0213 in.
	K	0.57 mm	0.0224 in.

Torque Specifications

Part tightened	kg-cm	ft-lb	N·m
Transfer x Transaxle (nut)	700	51	69
Ring gear mounting left case x Right case	984	71	97
Left case x Driven pinion bearing cage	400	29	39
Left case x Control valve sleeve cover	170	12	17
Left case x Case retainer	260	19	25
Left case x Inspection hole cover	170	12	17
Right case x Level gauge guide plate	100	7	10
Extension housing x Driven pinion bearing cage	260	19	25
Mode select lever and rod	130	9	13
Driven pinion lock nut	1,000	72	98
Left case x Ring gear	1,260	91	124
Left case x Right case	340	25	33

PROPELLER SHAFT

Specifications

Bearing axial play		0.05 mm	0.0020 in.
Front propeller shaft runout	Limit	0.8 mm	0.0315 in.
Intermediate shaft runout	Limit	0.8 mm	0.0315 in.
Rear propeller shaft runout	Limit	0.8 mm	0.0315 in.
Inter–mediate shaft flange runout	Limit	0.1 mm	0.0039 in.

Torque Specifications

Part tightened		kg-cm	ft-lb	N·m
Propeller shaft x Differential		380	27	37
Intermediate shaft x Propeller shaft		380	27	37
Center support bearing x Body		375	27	37
Intermediate shaft x Center bearing x Joint flange				
	1st	1,850	134	181
	2nd	Loosen nut		
	3rd	700	51	69
Cross groove joint set bolt		275	20	27

SUSPENSION AND AXLE

Specifications

Cold tire inflation pressure kg/cm^2 (psi, kPa)	Tire size			Front	Rear
	2WD	155 SR 13		2.0 (28, 200)	←
		P155/80R 13		2.1 (29, 210)	←
		175/70R 13 82S, 175/70 SR 13		1.8 (26, 180)	←
		P175/70R 13		2.1 (29, 210)	←
		185/60R 14 82H		1.8 (26, 180)	←
	4WD	165 SR 13		2.0 (28, 200)	←
		185/70 SR 13, 185/70R 13 85S		1.8 (26, 180)	←
Chassis ground clearance mm (in.)	Tire size			Front	Rear
	2WD	155 SR 13 P155/80R 13	Coupe	183 (7.20)	238 (9.37)
			Ex. coupe	186 (7.32)	242 (9.53)
		175/70R 13 82S 175/70 SR 13 P175/70R 13	Coupe	184 (7.24)	239 (9.41)
			Ex. coupe	187 (7.36)	243 (9.57)
		185/60R 14 82H		178 (7.01)	236 (9.29)
	4WD	All models		211 (8.31)	242 (9.53)
Front wheel alignment				Inspection STD	Adjustment STD
	Toe–in			1 ± 2 mm (0.04 ± 0.08 in.)	1 ± 1 mm (0.04 ± 0.04 in.)
	Left–right error			1.0 mm (0.04 in.)	←
	Camber	2WD	4A–F engine	–10′ ± 45′	–
			4A–GE engine	–15′ ± 45′	–
		4WD		0°10′ ± 30′	–
	Left–right error			30′ or less	–
	Caster	2WD	4A–F engine	Coupe	1°30′ ± 45′	–
				Ex. coupe	1°20′ ± 45′	–
			4A–GE engine		1°20′ ± 45′	–
		4W/D			1°15′ ± 30′	–
	Left–right error				30′ or less	–
	Steering axis inclination	2WD	4A–F engine		12°40′ ± 45′	–
			4A–GE engine		12°50′ ± 45′	–
		4WD			12°05′ ± 30′	–
	Left–right error				30′ or less	–

Specifications (Cont'd)

Front wheel alignment (cont'd)	Wheel angle		Engine	Grade	Maximum		Outside wheel at 20°
					Inside wheel	Outside wheel	Inside wheel
		2W D	4A–F (w/o PS)	LE, DX	38°30′	33°	21°30′
				Others	37°30′	32°30′	
			4A–F (w/ PS)	All			
			4A–G E (w/o PS)				
			4 A–G E (w/ PS)		37°	32°	
		4WD	All		38°		

Rear wheel alignment (2WD)	Toe–in mm (in.)		Inspection STD	Adjustment STD
			4 ± 2 (0.16 ± 0.08)	4 ± 1 (0.16 ± 0.04)
	Camber	4A–F engine	Coupe	–41′ ± 45′
			Ex. coupe	–35′ ± 45′
		4A–GE engine	All	–41′ ± 45′
		Left–right error	30′ or less	
Wheel later–al runout			Less than 1.0 mm (0.039 in.)	
Front axle and suspension	Hub bearing axial direction play (4WD) Limit		0.05 mm	0.0020 in.
	Ball joint rotation condition		10–35 kg-cm	9 – 30 in.-lb 1.0–3.4 N·m
	Ball joint vertical play		0 mm	0 in.
	Drive shaft standard length	2WD SAGINAW TYPE LH	623.6 mm	24.551 in.
		2WD SAGINAW TYPE RH	938.1 mm	36.993 in.
		2WD TOYOTA TYPE LH	523.2 – 533.2 mm	20.598 – 20.992 in.
		2WD TOYOTA TYPE RH	837.7 – 847.7 mm	32.980 – 33.374 in.
		4WD LH	501.0 – 511.0 mm	19.724 – 20.118 in.
		4WD RH	504.2 – 514.2 mm	19.850 – 20.244 in.
Rear axle and suspension (4WD)	Rear axle shaft bearing inner retainer installing temperature		150°C	302°F
	Rear axle shaft runout	Max. limit	1.5 mm	0.059 in.
	Rear axle shaft flange runout	Max. limit	0.1 mm	0.004 in.
Differential (4WD)	Drive pinion bearing preload at Starting	New bearing	10–16 kg-cm	8.7–13.9 in.-lb 1.0–1.6 N·m
		Reused bearing	5 – 8 kg-cm	4.3–6.9 in.-lb 0.5–0.8 N·m
	Total preload	at Starting	Add drive pinion bearing preload	
			3 – 5 kg-cm	2.6–4.3 in.-lb 0.3–0.5 N·m
	Drive pinion to ring gear backlash		0.13 – 0.18 mm	0.0051 – 0.0071 in.
	Pinion gear to side gear backlash		0.05 – 0.20 mm	0.0020 – 0.0079 in.
	Ring gear runout		0.07 mm	0.0028 in.
	Companion flange runout	Limit Radial	0.10 mm	0.0039 in.
		Lateral	0.10 mm	0.0039 in.
	Ring gear installing temperature		90 – 110°C	194 – 230°F
	Oil seal drive depth		4.0 mm	0.157 in.

Specifications (Cont'd)

Differential (4WD) (cont'd)	Side gear thrust washer thickness	0.95 mm	0.0374 in.
		1.00 mm	0.0394 in.
		1.05 mm	0.0413 in.
		1.10 mm	0.0433 in.
		1.15 mm	0.0453 in.
		1.20 mm	0.0472 in.
	Drive pinion adjusting plate washer thickness	2.27 mm	0.0894 in.
		2.30 mm	0.0906 in.
		2.33 mm	0.0917 in.
		2.36 mm	0.0929 in.
		2.39 mm	0.0941 in.
		2.42 mm	0.0953 in.
		2.45 mm	0.0965 in.
		2.48 mm	0.0976 in.
		2.51 mm	0.0988 in.
		2.54 mm	0.1000 in.
		2.57 mm	0.1012 in.
		2.60 mm	0.1024 in.
		2.63 mm	0.1035 in.
		2.66 mm	0.1047 in.
		2.69 mm	0.1059 in.

Torque Specifications

Part tightened	kg-cm	ft-lb	N-m
[Front Axle and Suspension]			
Tie rod end lock nut	570	41	56
Shock absorber x Steering knuckle	2,800	203	275
Tie rod end x Steering knuckle	500	36	49
Ball joint x Lower arm	1,450	105	142
Disc brake caliper x Steering knuckle	900	65	88
Hub bearing lock nut	1,900	137	186
Ball joint x Steering knuckle	1,050	76	103
Suspension support x Body	400	29	39
Piston rod x Suspension support	475	34	47
Front disc brake hose union bolt	310	22	30
Suspension crossmember x Body			
(Front bolts of left and right side)	2,100	152	206
(Rear bolts of left and right side)	1,300	94	127
(Bolts and nuts of center part)	620	45	61
Stabilizer bar x Lower arm (2WD 4A–F engine & 4WD)	180	13	18
(2WD 4A–GE engine)	360	26	35
Lower arm bushing nut	1,400	101	137
Lower arm front bolt	2,400	174	235
Lower arm rear bracket x Body			
(Lower arm side)	1,300	94	127
(Stabilizer side)	510	37	50
(Small bolt and nut)	195	14	19

Torque Specifications (Cont'd)

Part tightened	kg-cm	ft-lb	N-m
[Rear Axle and Suspension]			
(2WD)			
Axle bearing lock nut	1,250	90	123
Axle carrier x Shock absorber	1,450	105	142
Axle hub x Axle carrier	820	59	80
Strut rod x Axle carrier	900	65	88
No. 1 and No. 2 suspension arm x Axle carrier	900	65	88
Piston rod x Suspension support	500	36	49
No. 1 suspension arm x Body	900	65	88
No. 2 suspension arm x Body	1,100	80	108
Strut rod x Body	900	65	88
Stabilizer bar x Stabilizer bar link	360	26	35
Shock absorber x Stabilizer bar link	360	26	35
Stabilizer bar bracket x Body	195	14	19
Fuel tank band x Body	400	29	39
Hub nut	1,050	76	103
(4WD)			
Rear axle shaft bearing retainer x Backing plate	670	48	66
Propeller shaft x Companion flange	380	27	37
Ring gear x Differential case	985	71	97
Side bearing cap x Differential carrier	800	58	78
Side bearing adjusting lock nut	130	9	13
Differential carrier x Axle housing	315	23	31
Rear shock absorber x Body	250	18	25
Rear– shock absorber x Rear axle housing	375	27	37
Lateral control rod x Body	1,000	72	98
Upper control arm x Rear axle housing	1,000	72	98
Upper control arm x Body	1,000	72	98
Lower control arm x Rear axle housing	1,000	72	98
Lower control arm x Body	1,000	72	98
Stabilizer bar bracket x Rear axle housing	375	27	37
Stabilizer bar link x Stabilizer bar	310	22	30
Hub nut	1,050	76	103

BRAKE SYSTEM

Specifications

Brake pedal	Pedal height (from asphalt sheet)	139 – 149 mm 5.47 – 5.87 in.
	Pedal freeplay	3 – 6 mm 0.12 – 0.24 in.
	Pedal reserve distance at 50 kg (110.2 l b, 490 N)	
	Rear drum brake	More than 55 mm (2.17 in.)
	Rear disc brake	More than 60 mm (2.36 in.)
	4WD	More than 65 mm (2.56 in.)

Specifications (Cont'd)

Brake booster	Booster push rod to piston clearance w/ SST			0 mm	0 in.
Front brake	Pad thickness		STD	10.0 mm	0.394 in.
			Limit	1.0 mm	0.039 in.
	Disc thickness	4A–GE	STD	22.0 mm	0.866 in.
			Limit	21.0 mm	0.827 in.
		4A–FE	STD	18.0 mm	0.709 in.
			Limit	17.0 mm	0.669 in.
	Disc runout		Limit	0.09 mm	0.0035 in.
Rear brake (Drum)	Lining thickness		STD	4.0 mm	0.157 in.
			Limit	1.0 mm	0.039 in.
	Drum inner diameter		STD	200.0 mm	7.874 in.
			Limit	201.0 mm	7.913 in.
	Shoe to parking brake shoe lever clearance			0 – 0.35 mm	0 – 0.0138 in.
	Parking brake shoe lever shim thickness			0.2 mm	0.008 in.
				0.3 mm	0.012 in.
				0.4 mm	0.016 in.
				0.5 mm	0.020 in.
				0.6 mm	0.024 in.
				0.9 mm	0.035 in.
	Drum to shoe clearance			0.6 mm	0.024 in.
Rear brake (Disc)	Pad thickness		STD	10.0 mm	0.394 in.
			Limit	1.0 mm	0.039 in.
	Disc thickness		STD	9.0 mm	0.354 in.
			Limit	8.0 mm	0.315 in.
	Disc runout		Limit	0.10 mm	0.0039 in.
Parking brake	Lever travel	at 20 kg (44.1 lb, 196 N)			
			Rear drum brake	4 – 7 clicks	
			Rear disc brake	5 – 8 clicks	

Torque Specifications

Part tightened	kg-cm	ft-lb	N·m
Master cylinder x Piston stopper bolt	100	7	10
Master cylinder x Reservoir	17.5	15.2 in.-lb	1.7
Master cylinder x Brake booster	130	9	13
Brake booster x Pedal bracket	130	9	13
Brake booster clevis lock nut	260	19	25
Front brake cylinder installation bolt	255	18	25
Front disc brake torque plate x Steering knuckle	900	65	88

Torque Specifications (Cont'd)

Part tightened	kg-cm	ft-lb	N·m
Front disc brake cylinder x Union bolt	310	22	30
Brake tube union nut	155	11	15
Bleeder plug	85	74 in.-lb	8.3
Rear– drum brake wheel cylinder installation bolt	100	7	10
Rear disc brake cylinder torque plate x Rear axle carrier	475	34	47
Rear disc brake cylinder installation bolt	200	14	20
Rear disc brake cylinder x Union bolt	310	22	30
Brake pedal setting nut	375	27	37
Parking brake lever x Body	130	9	13

STEERING

Specifications

Steering column	Steering wheel freeplay	Maximum	30 mm	1.18 in.	
	Collar outer diameter	Mark			
		0 or A	11.483 – 11.493 mm	0.4521 – 0.4525 in.	
		2 or 6	11.499 – 11.509 mm	0.4527 – 0.4531 in.	
		3 or 7	11.494 – 11.504 mm	0.4525 – 0.4529 in.	
		4 or 8	11.488 – 11.498 mm	0.4523 – 0.4527 in.	
Manual gear housing	Steering rack runout	Maximum	0.3 mm	0.012 in.	
	Pinion bearing preload	at Turning	2.3–3.3 kg-cm	2.0–2.9 in.-lb	0.2–0.3 N·m
	Total preload	at Turning	10–13 kg-cm	8.7–11.3 in.-lb	1.0–1.3 N·m
Power steering	Drive belt tension				
	4A–FE engine	New belt	125 ± 25 lb		
		Used belt	80 ± 20 lb		
	4A–GE engine	New belt	175 ± 5 lb		
		Used belt	115 ± 20 lb		
	Maximum rise of oil level		Below 5 mm (0.20 in.)		
	Oil pressure	at Idle speed	65 kg/cm^2	924 psi	6,374 kPa
	Steering effort	Maximum	60 kg-cm	52 in.-lb	5.9 N·m
	Rotor shaft to bushing oil clearance	STD	0.01 – 0.03 mm	0.0004 – 0.0012 in.	
		Maximum	0.07 mm	0.0028 in.	
	Vane plate				
	Height	Minimum	8.00 mm	0.3150 in.	
	Thickness	Minimum	1.77 mm	0.0697 in.	
	Length	Minimum	14.97 mm	0.5894 in.	
	Vane plate to rotor groove clearance	Maximum	0.03 mm	0.0012 in.	
	Vane plate length Rotor and cam ring mark				
		None	14.996 – 14.998 mm	0.5904 – 0.5905 in.	
		1	14.994 – 14.996 mm	0.5903 – 0.5904 in.	
		2	14.992 – 14.994 mm	0.5902 – 0.5903 in.	
		3	14.990 – 14.992 mm	0.59016 – 0.59024 in.	
		4	14.988 – 14.990 mm	0.5901 – 0.5902 in.	
	Flow control spring length	STD	38 mm	1.49 in.	
		Minimum	36 mm	1.42 in.	

Specifications (Cont'd)

Power steering (cont'd)	Pump rotating torque	Maximum	2.8 kg-cm	2.4 in.-lb	0.3 N-m
	Steering rack runout	Maximum	0.3 mm	0.012 in.	
	Rotor– shaft bushing oil clearance (TOYOTA type)				
		STD	0.021 – 0.083 mm	0.0008 – 0.0033 in.	
		Maximum	0.125 mm	0.0049 in.	
	Rack housing bushing drive in depth				
		(TOYOTA type)	69.5 mm	2.736 in.	
	Total preload at Turning	(KOYO type)	9–12 kg-cm	7.8–10.4 in.-lb	0.9–1.2 N-m
		(TOYOTA type)	8–13 kg-cm	6.9–11.3 in.-lb	0.8–1.3 N-m

Torque Specifications

	Part tightened	kg-cm	ft-lb	N-m
Steering column	Tilt pawl set nut	80	69 in.-lb	7.8
	Tilt lever retainer set nut			
	(Tilt lever side)	80	69 in.-lb	7.8
	(Steering bolt side)	100	7	10
	Lower column tube x Steering support	195	14	19
	Compression spring bushing bolt	80	69 in.-lb	7.8
	Steering wheel nut	350	25	34
	Column hole cover x Body	50	43 in.-lb	4.9
	Breakaway bracket x Body	260	19	25
	Main shaft x Intermediate shaft	360	26	35
	Column tube x Body	260	19	25
Manual gear housing	Column hole cover x Body	50	43 in.-lb	4.9
	Gear housing bracket x Body	600	43	59
	Tie rod end x Steering knuckle	500	36	49
	Universal joint bolt	360	26	35
	Engine rear mount bracket insulator	800	58	78
	Lower crossmember x Body			
	(Front lower arm –bolts of left and right side)	2,100	152	206
	(Rear bolts of left and right side)	1,500	109	147
	(Bolts of center part)	620	45	61
	(Nuts of center part)	490	35	48
	Ball joint x Lower arm	1,450	105	142
	Stabilizer bar x Lower arm	180	13	18
	Lower– arm rear bracket x Body			
	(Lower arm side)	1,500	109	147
	(Stabilizer side)	510	37	50
	(Small bolt and nut)	195	14	19
	Center crossmember x Body			
	(Front bolts)	620	45	61
	(Center bolts and nuts)	490	35	48
	(Rear nut)	195	14	19
	Pinion bearing adjusting screw lock nut	930	67	91
	Rack guide spring cap lock nut	570	41	56
	Rack x Rack end	730	53	72
	Tie rod end lock nut	570	41	56

Torque Specifications (Cont'd)

	Part tightened	kg-cm	ft-lb	N-m
Power steering	Pressure tube x Pump body (4A–GE)	360	26	35
	Pressure tube union bolt (4A–FE)	450	33	44
	Power steering pump mounting bolt	400	29	39
	Adjusting bracket x Engine (4A–FE)	400	29	39
	Union bolt (4A–FE)	700	51	69
	Pump bracket x Pump body (4A–GE)	400	29	39
	Pump bracket x Engine (4A–GE)	400	29	39
	Idler pulley bracket x Pump body (4A–GE)	400	29	39
	Suction port union x Housing (4A–GE)	130	9	13
	Drive pulley nut (4A–FE)	440	32	43
	Drive pulley nut (4A–GE)	390	28	38
	Pressure port union x Front housing	700	51	69
	Reservoir tank x Housing (4A–FE)	130	9	13
	Reservoir tank bracket x Housing (4A–FE)	130	9	13
	Air control valve	370	27	36
	Pressure and return line x Housing (TOYOTA type)	450	33	44
	Pressure and return line x Housing (KOYO type)	200	14	20
	Gear housing bracket x Body	600	43	59
	Column hole cover x Body	50	43 in.-lb	4.9
	Tie rod end x Steering knuckle	500	36	49
	Universal joint bolt	360	26	35
	Pressure line x Bracket	55	48 in.-lb	5.4
	Engine rear mount bracket	530	38	52
	Front exhaust pipe Front	630	46	62
	Rear	195	14	19
	Propeller shaft	380	27	37
	Lower crossmember x Body			
	(Front lower arm bolts of left and right side)	2,100	152	206
	(Rear bolts of left and right side)	1,500	109	147
	(Bolts of center– part)	620	45	61
	(Nuts of center part)	490	35	48
	Ball joint x Lower arm	1,450	105	142
	Stabilizer bar x Lower arm	180	13	18
	Lower arm rear bracket x Body			
	(Lower arm side)	1,500	109	147
	(Stabilizer side)	510	37	50
	(Small bolt and nut)	195	14	19
	Center crossmember x Body			
	(Front bolts)	620	45	61
	(Center bolts and nuts)	490	35	48
	(Rear nut)	195	14	19
	(KOYO type)			
	Rack x Rack end	730	53	72
	Tie rod end lock nut	570	41	56
	Control valve housing x Rack housing	185	13	18
	Control valve shaft x Bearing	250	18	25
	Rack housing cap	600	43	59
	Rack guide spring cap lock nut	540	39	53

Torque Specifications (Cont'd)

Power–steering (cont'd)	Part tightened	kg-cm	ft-lb	N·m
	Turn pressure tube x Housing (TOYOTA type)	110	8	11
	Rack x Rack end	730	53	72
	Tie rod end lock nut	570	41	56
	Control valve shaft x Bearing	600	43	59
	Rack housing cap	700	51	69
	Rack guide spring cap lock nut	390	48	38
	Turn pressure tube x Housing	200	14	20
	Air control valve x Housing	370	27	36

BODY

Specifications

Sun roof	Difference between sliding roof panel and roof panel	0^{+1}_{-2} mm	$0^{+0.039}_{-0.079}$ in.

Torque Specifications

Part tightened	kg-cm	ft-lb	N·m
Rear bumper set bolt	1,500	109	147
SEAT			
Front Seat			
Seat back x Seat adjuster	185	13	18
Seat cushion x Seat adjuster	185	13	18
Seat adjuster x Body	375	27	37
Rear seat (Sedan/Fixed Type)			
Seat back x Body	55	48 in.-lb	5.4
Rear seat (Sedan/Separate Type)			
Seat back x Body	185	13	18
Seat back side hinge x Seat back	185	13	18
Seat backside hinge x Body	80	69 in.-lb	7.8
Seat back center hinge x Seat back	80	69 in.-lb	7.8
Seat back center hinge x Body	80	69 in.-lb	7.8
Rear seat (Coupe/Fixed Type)			
Seat back x Body	50	43 in.-lb	4.9
Rear seat (Coupe/Separate Type)			
Seat back side hinge x Seat back	200	14	20
Seat backside hinge x Body	80	69 in.-lb	7.8
Seat back center hinge x Seat back	80	69 in.-lb	7.8
Seat back center hinge x Body	80	69 in.-lb	7.8
Rear seat (FWD Wagon)			
Seat cushion x Body	185	13	18
Seat back hinge x Body	185	13	18
Seat back side hinge x Seat back	185	13	18
Seat backside hinge x Body	80	69 in.-lb	7.8
Seat back center hinge x Seat back	80	69 in.-lb	7.8
Seat back center hinge x Body	80	69 in.-lb	7.8

Torque Specifications (Cont'd)

Part tightened		kg-cm	ft-lb	N·m
Rear seat (AII–Track/4WD Wagon)				
Seat back side hinge x Seat back		185	13	18
Seat backside hinge x Body		80	69 in.-lb	7.8
Seat back center hinge x Seat back		80	69 in.-lb	7.8
Seat back center hinge x Body		80	69 in.-lb	7.8
SEAT BELT				
Front Seat Belt (Canada)				
Shoulder belt anchor x Body		440	32	43
Shoulder belt lower side x Body		440	32	43
ELR upper side X Body		55	48 in.-lb	5.4
Inner belt x Body		440	32	43
Belt guide x Body		80	69 in.-lb	7.8
Front seat belt (USA)				
Shoulder buckle x Door glass run		150	11	15
Clevis x Body		110	8	11
Bracket x Front seat (Ex. Coupe)		195	14	19
Anchor– bracket x Lower arm (Coupe)		195	14	19
Inner guide x Lower arm (Coupe)		195	14	19
Inner backle x Bracket (Ex. Coupe)		440	32	43
Lap inner belt x Anchor bracket (Coupe)		440	32	43
Plate x Body		440	32	43
Shoulder inner guide x Front seat (Ex. Coupe)		195	14	19
Shoulder retractor x Body	Front	55	48 in.-lb	5.4
	Rear	440	32	43
Side retractor x Body		195	14	19
Rear Seat Belt				
ELR x Body		440	32	43
Outer belt shoulder anchor x Body	Upper	55	48 in.-lb	5.4
	Lower	440	32	43
Outer belt lower anchor x Body	Upper	55	48 in.-lb	5.4
	Lower	440	32	43
Inner belt x Body		440	32	43
CRS tether– anchor x Body		210	15	21

LUBRICANT

Item	Capacity			Classification
	Liters	US qts	Imp. qts	
Engine oil				API service SG, multigrade fuel–efficient and recommended viscosity oil
(4A–FE) Dry fill	3.7	3.9	3.3	
Drain and refill				
w/ Oil filter change w/o Oil filter change	3.2	3.3	2.8	
(4A–GE) Dry fill	3.0	3.2	2.6	
Drain and refill	4.1	4.3	3.6	
w/ Oil filter change w/o Oil filter– change				
	3.7	3.9	3.3	
	3.4	3.6	3.0	

LUBRICANT (Cont'd)

Item	Capacity			Classification
	Liters	US qts	Imp. qts	
Manual transaxle oil C50, C52 (w/ Differential oil)	2.6	2.7	2.3	API G L–4 or G L–5, SAE 75W–90 or 80W–90
E55F5, E57F5 (w/ Differential oil and transfer)	5.0	5.3	4.4	Transaxle oil E50 (08885–80206) or equivalent (Recommended oil Oil grade : API GL–5 Viscosity : Above –18˚ C (0˚ F) SAE 75W–90, 80W–90 o r 90 Below –18˚C (0˚ F) SAE 75W–90,80W–90 or 80W)
Automatic transmission fluid A131L Dry fill	5.5	5.8	4.8	ATF DEXRON® II
Drain and refill	2.5	2.6	2.2	
A240L Dry fill	7.2	7.6	6.3	
Drain and refill	3.1	3.3	2.7	
A241H Dry fill	8.2	8.7	7.2	TOYOTA ATF type T (Part No. 08886–00405) or equivalent
Drain and refill	3.1	3.3	2.8	
Differential oil (A131L A/T only)	1.4	1.5	1.2	ATF DEXRON® 19
Transfer oil (A241H A/T only) Dry fill	0.8	0.8	0.7	Transaxle oil E50 (08885–80206) or equivalent
Drain and refill	0.7	0.7	0.6	(Recommended oil Oil grade : API GL–5 Viscosity : Above –18˚ C (0˚ F) SAE 75W–90, 80W–90 o r 90 Below –18˚C (0˚ F) SAE 75W–90,80W–90 or 80W)
Rear differential oil	1.1	1.2	1.0	API grade GL–5 Hypoid gear oil Viscosity: Above –18˚C (0˚F) SAE90 Below –18˚C (0˚F) SAE 80W–90 or 80W
Power steering fluid Pump	0.35	0.37	0.31	ATF DEXRON ® II
Total	0.80	0.85	0.70	
Steering gear housing grease	–			Molybdenum disulphide lithium base, N LG I No. 2
Brake fluid	–			SAE J1703 or FM VSS No. 116 DOT 3

AIR CONDITIONING SYSTEM

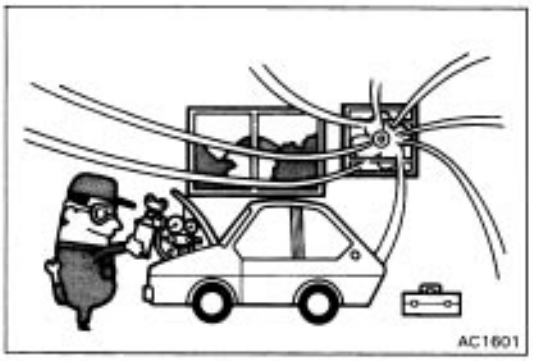

GENERAL INFORMATION

1. WHEN HANDLING REFRIGERANT (R–12), FOLLOWING PRECAUTIONS MUST BE OBSERVED

(a) Do not handle refrigerant in an enclosed area or near an open flame.

(b) Always wear eye protection.

(c) Be careful that liquid refrigerant does not get in your eyes or on your skin.

If liquid refrigerant gets in your eyes or on your skin;

- Do not rub.
- Wash the area with a lot of cool water.
- Apply clean petroleum jelly to the skin.
- Go immediately to a physician or hospital for professional treatment.
- Do not attempt to treat yourself.

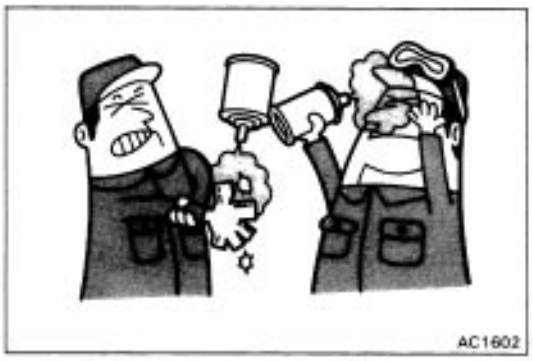

2. WHEN REPLACING PARTS ON REFRIGERANT LINE;

(a) Discharge refrigerant slowly before replacement.

(b) Insert a plug immediately in disconnected parts to prevent entry of moisture and dust.

(c) Do not leave a new condenser or receiver, etc., lying around with the plug removed.

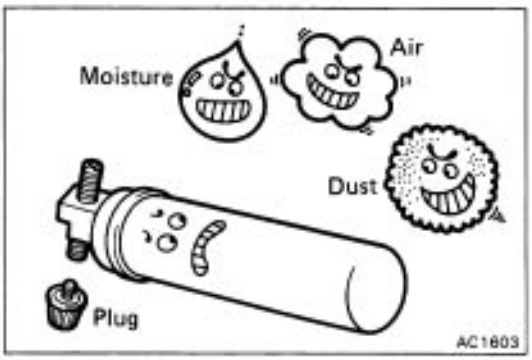

(d) Discharge refrigerant from the charging valve before installing the new compressor.

If the refrigerant is not discharged first, compressor oil will spray out with the refrigerant gas when the plug is removed.

(e) Do not use a burner for bending or lengthening operations on tubes.

If tubes are heated with a burner, a layer of oxidation forms inside the tube, causing the same kind of trouble as an accumulation of dust.

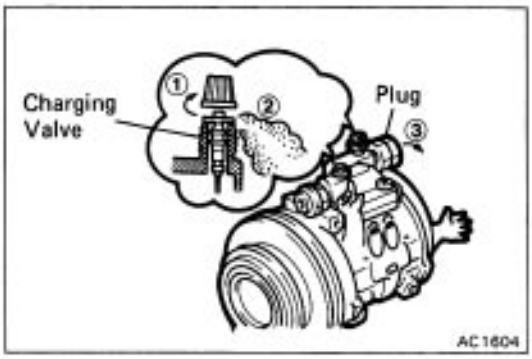

3. WHEN TIGHTENING CONNECTING PARTS;

(a) Apply a few drops of compressor oil to O–ring fittings for easy tightening and to prevent leaking of refrigerant gas.

(b) Tighten the nut using two wrenches to avoid twisting the tube.

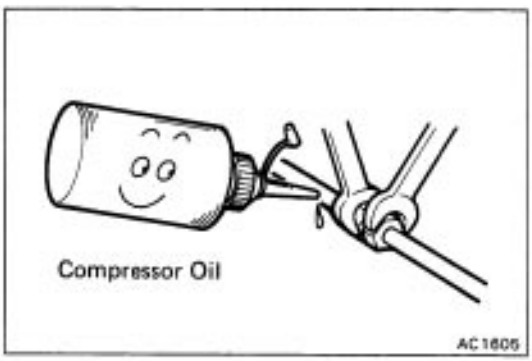

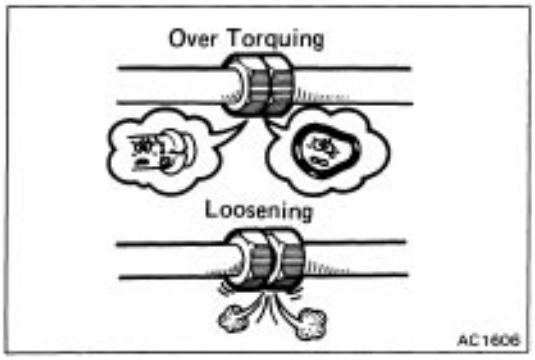

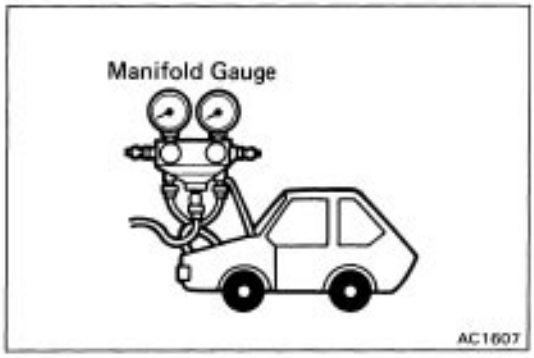

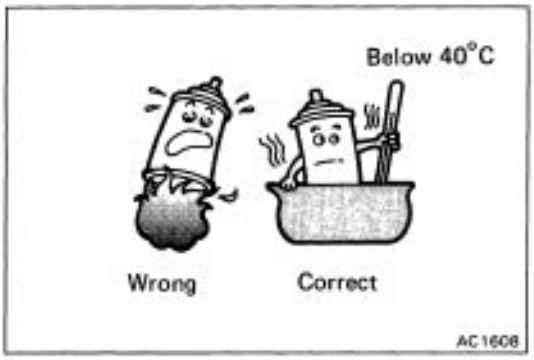

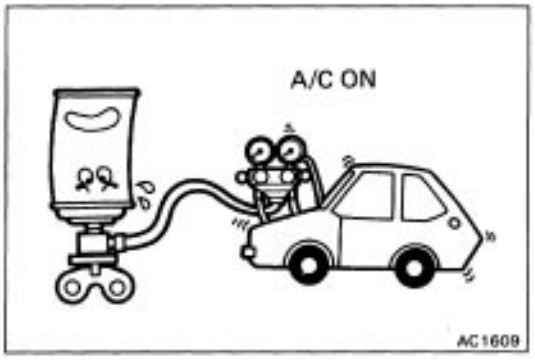

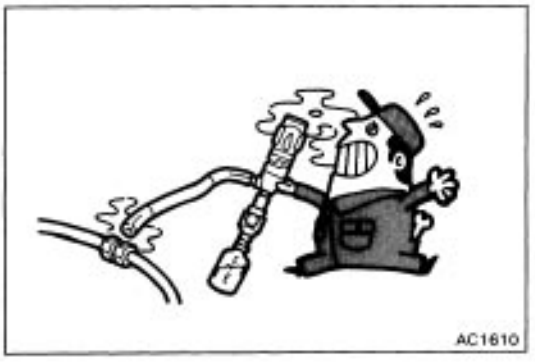

(c) Tighten the 0–ring fittings or the bolted type fittings to the specified torque

4. WHEN CONNECTING MANIFOLD GAUGE;

(a) Be sure to connect the charging hose end with a pin to the compressor charging valve.

(b) The letter ”D” engraved near the compressor service valve indicates the high pressure side, and ”S” indicates the low pressure side. Pay careful attention when connecting the hose.

(c) Tighten hose by hand.

(d) To prevent loosening of connected hose, do not ap–ply drops of compressor oil to the seat of connection.

HINT: After connecting the manifold gauge and the refrigerant container (service can), discharge any air in the hoses.

5. WHEN EVACUATING;

Approx. 15 minutes after removal, check the system for leaks, then take at least another 15 minutes to make sure the air is fully removed.

6. WHEN HANDLING REFRIGERANT CONTAINER (SERVICE CAN);

(a) Must never be heated.

(b) Must be kept below 40˚C (104˚F).

(c) If warming service can with hot water, be careful that the valve on top of the service can is never immersed in the water, as the water may permeate into the refrigerant cycle.

(d) Empty service cans must never be re–used.

7. WHEN A/C IS ON AND REFRIGERANT GAS IS BEING REPLENISHED;

(a) If there is not enough refrigerant gas in the refrigerant cycle, oil lubrication becomes insufficient and compressor burnout may occur, so take care to avoid this.

(b) If the valve on the high pressure side is opened, refrigerant flows in reverse and causes the service can to rupture, so only open and close the valve on the low pressure side.

(c) If the service can is inverted and refrigerant is inserted in a liquid state, the liquid is compressed and the compressor breaks down, so the refrigerant must be inserted in a gaseous state.

(d) Be careful not to insert too much refrigerant gas, as this causes trouble such as inadequate cooling, poor fuel economy, engine overheat, etc.

8. WHEN USING GAS–CYLINDER TYPE LEAK DETECTION INSTRUMENT;

(a) As a naked flame is used, first make sure that there are no flammable substances nearby before using it.

(b) Be careful, as poisonous gas is produced when refrigerant gas comes in contact with heat parts.

AIR CONDITIONING SYSTEM CIRCUIT

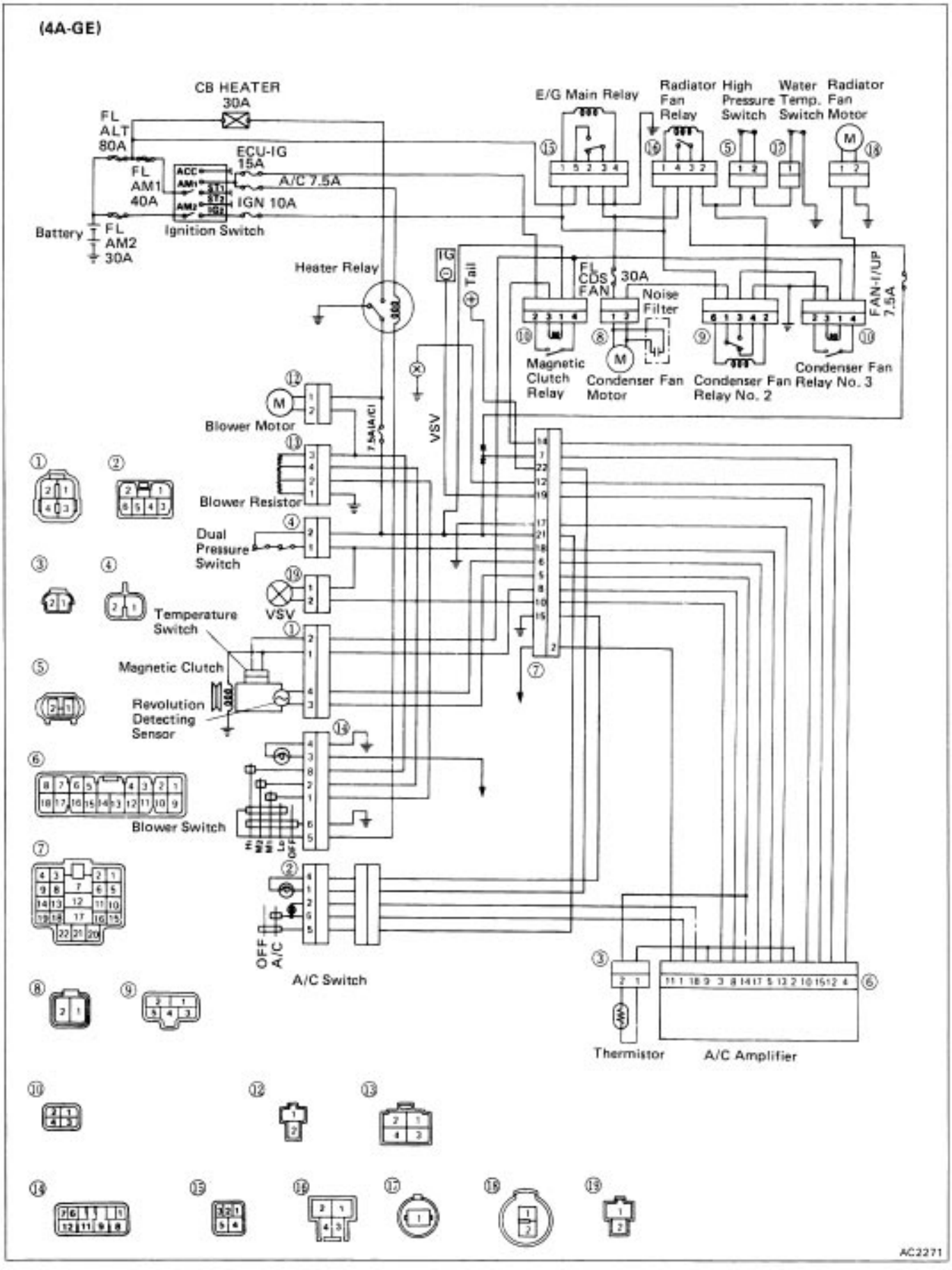

AIR CONDITIONING SYSTEM CIRCUIT (Cont'd)

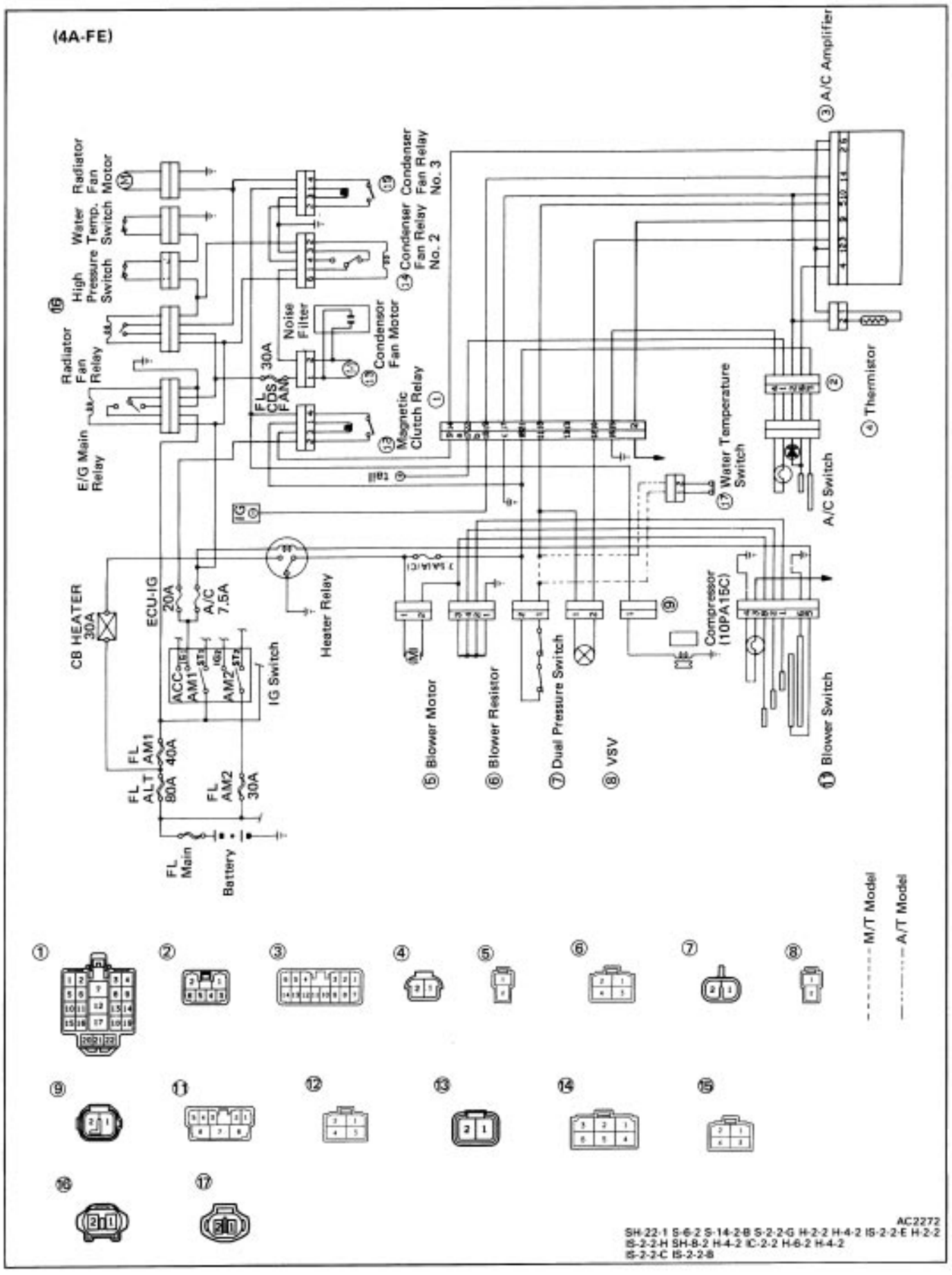

SYSTEM COMPONENTS

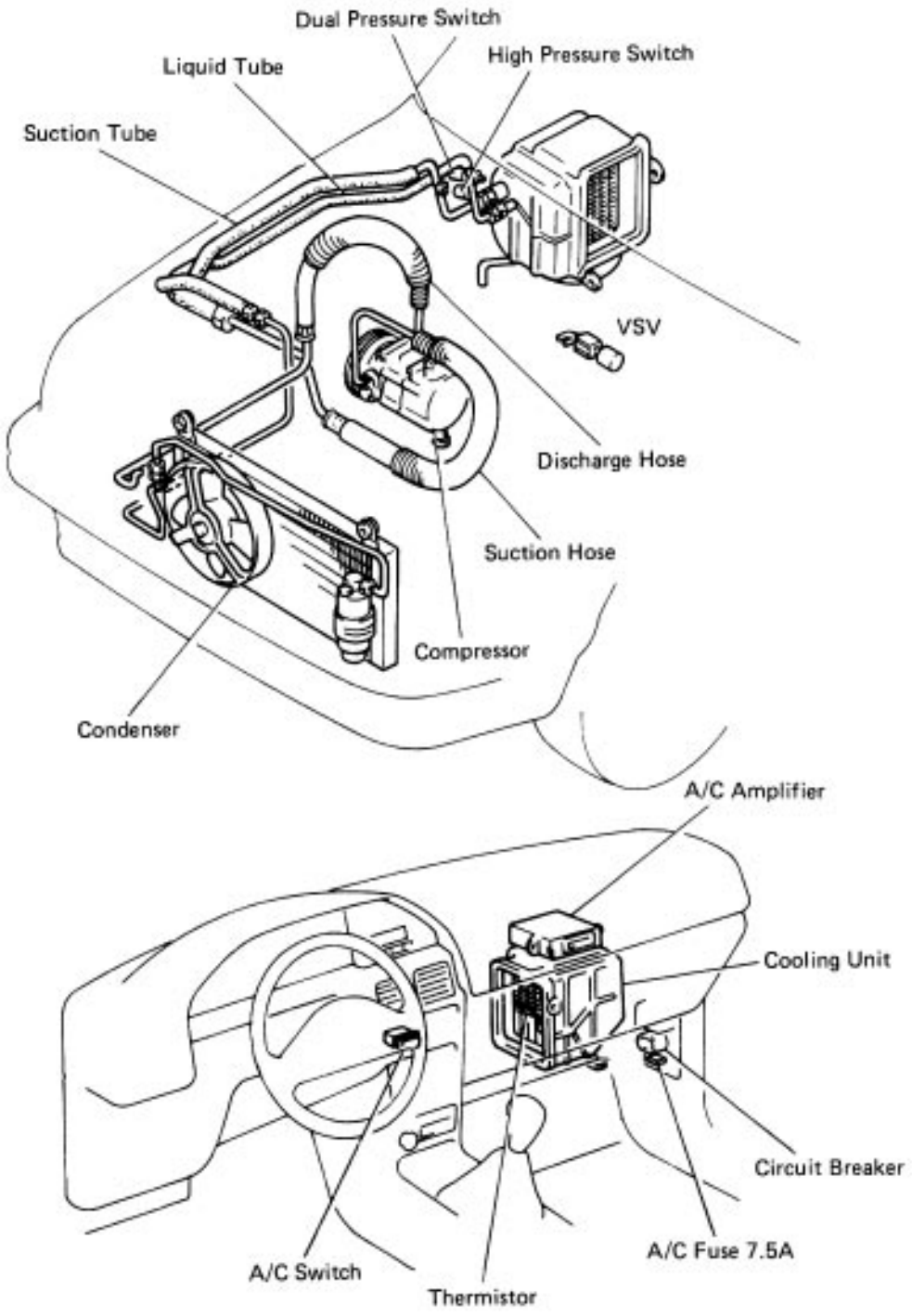

Fuse, Fusible Link (FL), Circuit Breaker (CB), Relay etc.; See page BE-7 to 11.

Specified torque: kg-cm (ft-lb, N·m)

0.31 in. Tube		140 (10, 14)
0.50 in. Tube		230 (17, 23)
0.62 in. Tube		330 (24, 32)
Bolted Type	For Compressor	250 (18, 25)
	For Condenser	130 (9, 13)
	For Receiver	55 (48 in.-lb, 5.4 N·m)

AC1521

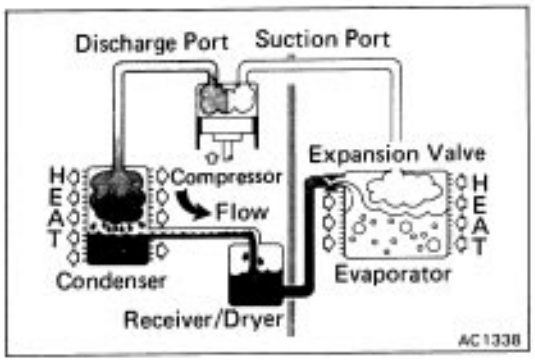

GENERAL DESCRIPTION

REFRIGERATION CYCLE

1. The compressor discharges high temperature and high pressure refrigerant containing the heat absorbed from the evaporator plus the heat created by the compressor in a discharge stroke.
2. This gaseous refrigerant flows into the condenser. In the condenser, the gaseous refrigerant condenses into liquid refrigerant.
3. This liquid refrigerant flows into the receiver which stores and filters the liquid refrigerant till the evaporator requires the refrigerant.
4. The liquid refrigerant is changed by the expansion valve into a low temperature, low pressure liquid and gaseous mixture.
5. This cold and foggy refrigerant flows to the evaporator. Vaporizing the liquid in the evaporator, the heat from the warm air stream passing through the evaporator core is transferred to the refrigerant. All the liquid is changed into gaseous refrigerant in the evaporator and only heat–laden gaseous refrigerant is drawn into the compressor. Then the process is repeated again.

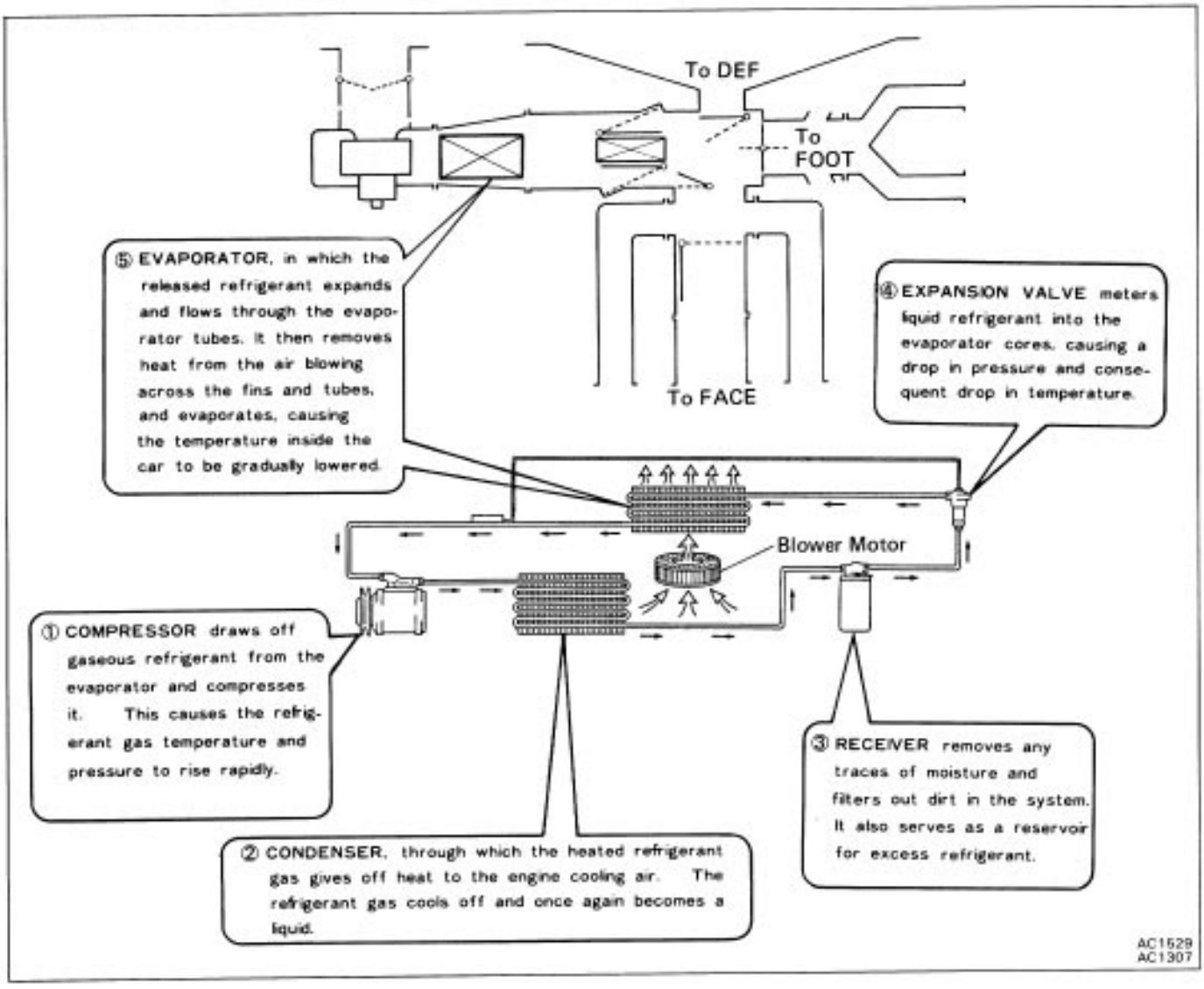

1. PRINCIPLE OF A/C ELECTRICAL CIRCUIT

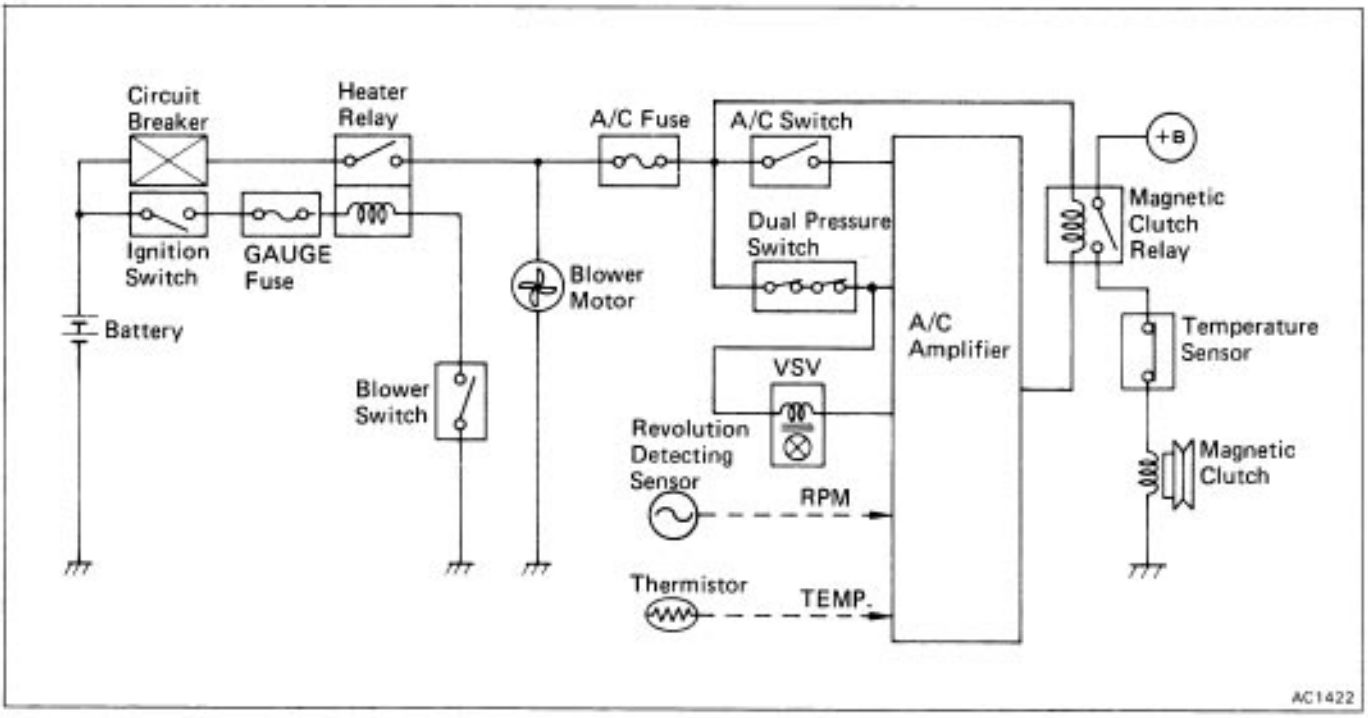

2. HOW IS MAGNETIC CLUTCH ENERGIZED?

The general process until the magnetic clutch is energized is shown below.

1. Ignition Switch ”ON”
2. Blower Switch ”ON” → Heater Relay ”ON” (Blower Motor ”RUN”)
3. A/C Switch ”ON” → A/C Amplifier ”ON” (A/C Amp. Main Power Supply)
4. Dual Pressure Switch ”ON”:
   Refrigerant Condition (2.1 kg/cm^2 (30 psi, 206 kPa) less than 27 kg/cm^2 (384 psi, 2,648 kPa))
5. Thermistor supplies temperature signal of evaporator to A/C amplifier.
6. VSV ”ON” ——————→ E/G Idle–Up
7. Magnetic Clutch Relay ”ON”’
8. Temperature Sensor ”ON”:
   Temperature of Temperature Sensor is less than 180˚C (356˚F).
9. Magnetic Clutch ”ON”
10. Revolution Detecting Sensor supplies RPM signal of compressor to A/C amplifier.

If compressor is not locked, magnetic clutch is continuously energized.

SPECIAL TOOLS AND EQUIPMENT

Tool	SST No.	Use
Ohmmeter	—	To perform electrical diagnosis
Voltmeter		To perform electrical diagnosis
Ammeter	—	To perform electrical diagnosis
Air conditioner Service Tool Set	07110-58011	To evacuate and charge system
Magnetic clutch remover	07112-66040	To remove pressure plate
Magnetic clutch stopper	07112-76060	To remove and install pressure plate
Snap ring pliers (External type)	07114-84020	To remove and install rotor and stator

SSM (SPECIAL SERVICE MATERIALS)

Part Name	Part No.	Use etc.
DENSOOIL 7 or equivalent	07117-68030 —	Compressor for 4A–GE E/G
DENSOOIL 6, SUNISO No.5GS or equivalent	07117-68040 —	Compressor for 4A–FE E/G

TROUBLESHOOTING

Problem	Possible cause	Remedy	Page
No cooling			
	Blower does not operate		
	(a) GAUGE fuse blown	Replace fuse and check for short	AC–4 to 5
	(b) FL blown	Replace FL and check for short	AC–4 to 5
	(c) Circuit breaker faulty	Check circuit breaker	AC–4 to 5
	(d) HEATER relay faulty	Check relay	BE–56
	(e) HEATER fuse blown	Replace fuse and check for short	AC–4 to 5
	(f) Blower motor faulty	Check blower motor	BE–56
	(g) Blower resistor faulty	Check blower resistor	BE–56
	(h) Blower switch faulty	Check blower switch	BE–56
	(i) Wiring or ground faulty	Repair as necessary	AC–4 to 5
	Magnetic clutch does not engage		
	(a) FL (30A CDS) blown	Replace FL and check for short	AC–4 to 5
	(b) Magnet clutch relay faulty	Check relay	AC–4 to 5
	(c) Magnetic clutch faulty	Check magnetic clutch	AC–16
	(d) A/C fuse faulty	Replace fuse and check for short	AC–4 to 5
	(e) ECU–IG fuse faulty	Replace fuse and check for short	AC–4 to 5
	(f) A/C switch faulty	Check switch	AC–36
	(g) Thermistor faulty	Check thermistor	AC–35
	(h) A/C amplifier faulty	Check amplifier	AC–37 to 38
	(i) Temperature switch on the compressor faulty (4A–GE E/G)	Check switch	AC–16
	(j) Pressure switch faulty	Check switch	AC–30
	(k) Wiring or ground faulty	Repair as necessary	AC–4 to 5
	(l) Refrigerant empty	Check refrigerant pressure	AC–11, 15

FL: Fusible Link

TROUBLESHOOTING (Cont'd)

Problem	Possible cause	Remedy	Page
No cooling (cont'd)	Compressor does not rotate properly (a) Drive belt loose or broken (b) Compressor faulty Expansion valve faulty Leak in system Fusible plug on receiver blown or clogged screen	 Adjust or replace drive belt Replace compressor Check expansion valve Test system for leaks Check receiver	 AC–14 AC–17 AC–31 AC–34 AC–26
Insufficient cooling	Condenser clogged Drive belt slipping Magnetic clutch faulty Compressor faulty Expansion valve faulty Thermistor faulty A/C amplifier faulty Insufficient or too much refrigerant Air or excessive compressor oil in system Receiver clogged Water valve cable set faulty	Check condenser Check or replace drive belt Check magnetic clutch Check compressor Check expansion valve Check thermistor Check amplifier Check refrigerant volume Evacuate and charge system Check receiver Reset water valve cable	AC–27 AC–14 AC–16 AC–16 AC–31 AC–35 AC–37 to 38 AC–11, 15 AC–26 BE–55
Insufficient velocity of cool air	Evaporator clogged or frosted Air leakage from cooling unit or air duct Air inlet blocked Blower motor faulty A/C amplifier faulty	Clean evaporator fins or filters Repair as necessary Repair as necessary Replace blower motor Check amplifier	AC–33 AC–38 to 39
A/C switch indicator flashing	Drive belt slipping A/C amplifier faulty	Check or replace drive belt Check amplifier	AC–14 AC–37 to 38
Cool air comes out intermittently	Magnetic clutch slipping Expansion valve faulty Excessive moisture in the system A/C amplifier faulty Wiring connection faulty	Check magnetic clutch Check expansion valve Evacuate and charge system Check amplifier Repair as necessary	AC–16 AC–31 AC–37 to 38 AC–4 to 5
Cool air comes out only at high speed	Condenser clogged Drive belt slipping Compressor faulty Insufficient or too much refrigerant Air in system	Check condenser Check or replace drive belt Check compressor Check refrigerant volume Evacuate and charge system	AC–27 AC–14 AC–16 AC–11, 15

Discharging of Refrigeration System Evacuating and Charging of Refrigeration System

(See Air Conditioning Fundamentals and Repairs Pub. No. 36950E)

Checking of Refrigeration System with Manifold Gauge

This is a method in which the trouble is located by using a manifold gauge. Read the manifold gauge pressure when the following conditions are established:

(a) Temperature at the air inlet is 30 – 35˚C (86 – 95˚F)
(b) Engine running at 1,500 rpm
(c) Blower fan speed switch set at high speed
(d) Temperature control lever set at cool side

HINT: It should be noted that the gauge indications may vary slightly due to ambient temperature conditions.

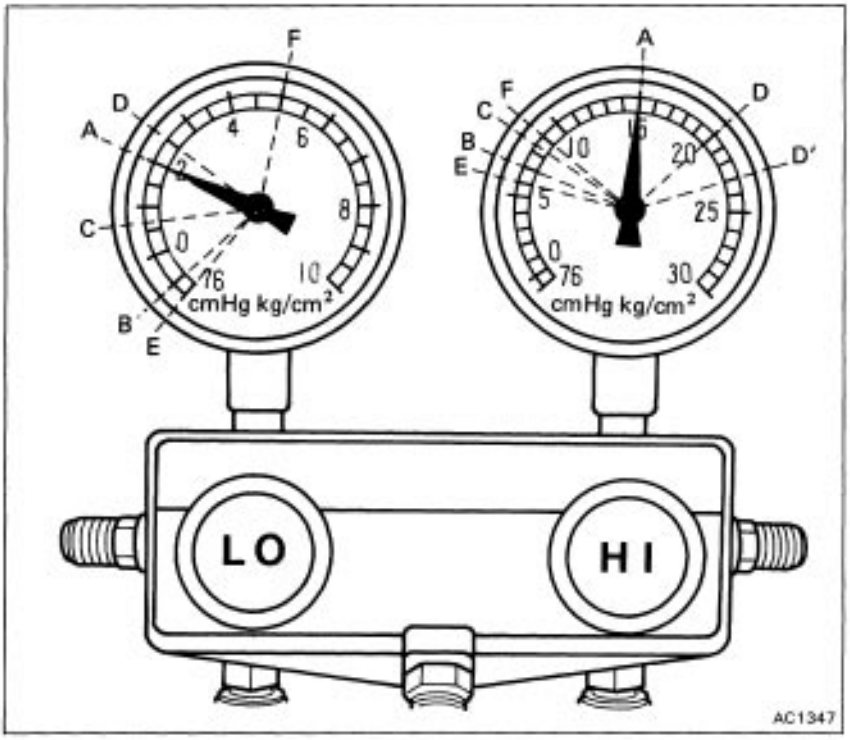

NORMALLY FUNCTIONING REFRIGERATION SYSTEM:
Gauge reading
Low pressure side
1.5 – 2.0 kg/cm^2
(21 – 28 psi, 147 – 196 kPa)
High pressure side
14.5 – 15.0 kg/cm^2
(206 – 213 psi,
1,422 – 1,471 kPa)
Each pointer of manifold gauge point to position A.

No.	Trouble	Condition	Position of Pointers
1	Moisture present in refrigeration system	Periodically cools and then fails to cool	Between A and B
2	Insufficient refrigerant	Insufficient cooling	C
3	Poor circulation of refrigerant	Insufficient cooling	C
4	Refrigerant overcharge or insufficient cooling of condenser	Does not cool sufficiently	D
5	Expansion valve improperly mounted, heat sensing tube defective (opens too wide)	Insufficient cooling	D
6	Air present in refrigeration system	Does not cool sufficiently	Low is D High is D'
7	Refrigerant does not circulate	Does not cool (Cools from time to time in some cases)	E
8	Insufficient compression	Does not cool	F

Checking of Refrigeration System with Manifold Gauge (Cont'd)

No.	Symptom seen in refrigeration system	Probable cause	Diagnosis	Remedy
1	During operation, pressure at low pressure side sometimes becomes a vacuum and sometimes normal	Moisture entered in refrigeration system freezes at expansion valve orifice and temporarily stops cycle, but normal state is restored after a time when the ice melts	Drier in oversaturated state ↓ Moisture in refrigeration system freezes at expansion valve orifice and blocks circulation of refrigerant	(1) Replace receiver and drier (2) Remove moisture in cycle through repeated vacuum purging (3) Charge refrigerant to proper amount
2	Pressure low at both low and high pressure sides Bubbles seen in sight glass Insufficient cooling performance	Gas leakage at some place in refrigeration system	Insufficient refrigerant in system ↓ Refrigerant leaking	(1) Check with gas leak tester and repair (2) Charge refrigerant to proper amount
3	Pressure low at both low and high pressure sides Frost on tubes from receiver to unit	Refrigerant flow obstructed by dirt in receiver	Receiver clogged	Replace receiver
4	Pressure too high at both low and high pressure sides	Unable to develop sufficient performance due to excessive refrigerant in system Condenser cooling insufficient	Excess refrigerant in cycle→ refrigerant overcharged Condenser cooling insufficient → condenser fins clogged or fan motor faulty	(1) Clean condenser (2) Check fan motor operation (3) If (1) and (2) are normal, check refrigerant amount HINT: Vent out refrigerant through gauge manifold low pressure side by gradually opening valve.
5	Pressure too high at both low and high pressure sides Frost or large amount of dew on piping at low pressure side	Trouble in expansion valve or heat sensing tube not installed correctly Refrigerant flow out	Excessive refrigerant in low pressure piping Expansion valve opened too wide	(1) Check heat sensing tube installed condition (2) If (1) is normal, test expansion valve in unit (3) Replace if defective
6	Pressure too high at both low and high pressure sides	Air entered refrigeration system	Air present in refrigeration system ↓ Insufficient vacuum purging	(1) Replace receiver and drier (2) Check compressor oil to see if dirty or insufficient (3) Vacuum purge and charge new refrigerant

* Note at No. 6
These gauge indications are shown when the refrigeration system has been opened and the refrigerant charged without vacuum purging.

Checking of Refrigeration System with Manifold Gauge (Cont'd)

No.	Symptom seen in refrigeration system	Probable cause	Diagnosis	Remedy
7	Vacuum indicated at low pressure side, very low pressure indicated at high pressure side Frost or dew seen on piping before and after receiver and drier or expansion valve	Refrigerant flow obstructed by moisture or dirt in refrigerant freezing or adhering to expansion valve orifice Refrigerant flow obstructed by gas leakage from expansion valve	Expansion valve orifice clogged ↓ Refrigerant does not flow	Allow to stand for some time and then restart operation to determine if trouble is caused by moisture or dirt. If caused by moisture refer to procedures Step 2 on page AC–12. If caused by dirt, remove expansion valve and clean off dirt by blowing with air. If unable to remove dirt, replace valve. Vacuum purge and charge new refrigerant to proper amount. For gas leakage from heat sensing tube, replace expansion valve.
8	Pressure too high at low pressure side Pressure too low at high pressure side	Internal leak in compressor	Compression defective ↓ Valve leaking or broken sliding parts (Piston, cylinder, gasket, etc.) broken	Repair or replace compressor

ON–VEHICLE INSPECTION

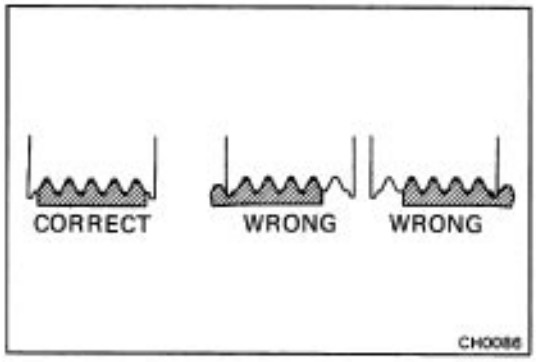

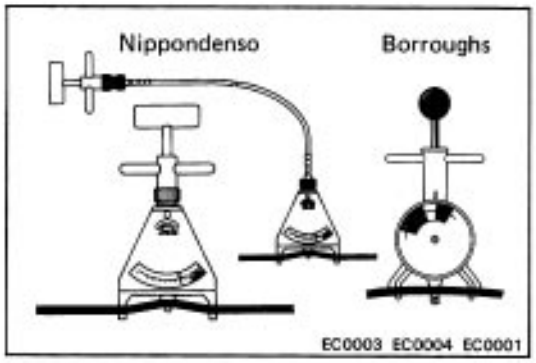

1. CHECK CONDENSER FINS FOR BLOCKAGE OR DAMAGE

If the fins are clogged, clean them with pressurized water.

NOTICE: Be careful not to damage the fins.

2. MAKE SURE THAT DRIVE BELT IS INSTALLED CORRECTLY

Check that the drive belt fins properly in the ribbed grooves.

3. CHECK DRIVE BELT TENSION

Using a belt tension gauge, check the drive belt tension.

Belt tension gauge:

Nippondenso BTG–20 (95506–00020 and 09216–00030) or

Borroughs No. BT–33–73F

Engine	New belt	Used belt
4A-FE	160 ± 20 lb	100 ± 20 lb
4A-GE	175 ± 5 lb	115 ± 20 lb

HINT:

- ”New belt” refers to a belt which has been used less than 5 minutes on a running engine.
- ”Used belt” refers to a belt which has been used on a running engine for 5 minutes or more.
- After installing the drive belt, check that if fits properly in the ribbed grooves.

4. START ENGINE

5. TURN ON A/C SWITCH

Check that the A/C operates at each position of the blower switch.

If blower does not operate, check circuit breaker.

6. CHECK MAGNETIC CLUTCH OPERATION

If magnetic clutch does not engage, check the A/C fuse.

7. CHECK THAT IDLE INCREASES

When the magnetic clutch engages, engine revolution should increase.

Standard idle–up rpm: 900 – 1,000 rpm

8. CHECK CONDENSER FAN MOTOR ROTATES

9. CHECK AMOUNT OF REFRIGERANT

If you can see bubbles in the sight glass, additional refrigerant is needed. (See page AC–15)

10. IF NO COOLING OR IT IS INSUFFICIENT, INSPECT FOR LEAKAGE

Using a gas leak tester, inspect each component of the refrigeration system.

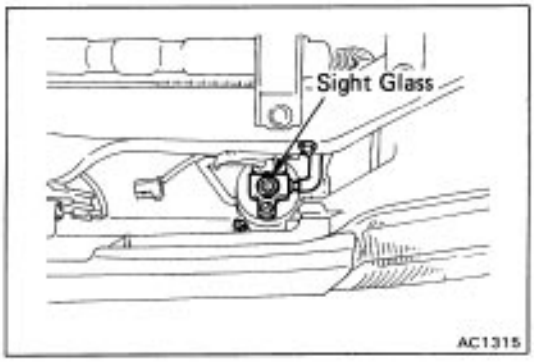

REFRIGERATION SYSTEM

Checking of Refrigerant Volume

1. RUN ENGINE AT APPROX. 1,500 RPM

2. OPERATE AIR CONDITIONER AT MAXIMUM COOLING FOR A FEW MINUTES

3. CHECK AMOUNT OF REFRIGERANT

Observe the sight glass on the receiver.

Item	Symptom	Amount of refrigerant	Remedy
1	Bubbles present in sight glass	Insufficient	Check for leak with gas leak tester
2	No bubbles present in sight glass	Empty, proper or too much	Refer to items 3 and 4
3	No temperature difference between compressor inlet and outlet	Empty or nearly empty	Evacuate and charge system. Then check for leak with gas leak detector.
4	Temperature between compressor inlet and outlet is noticeably different	Proper or too much	Refer to items 5 and 6
5	Immediately after air conditioner is turned off, refrigerant in sight glass stays clean	Too much	Discharge excess refrigerant to specified amount
6	When air conditioner is turned off, refrigerant foams and then stays clear	Empty, proper or too much	Refer to items 3 and 4

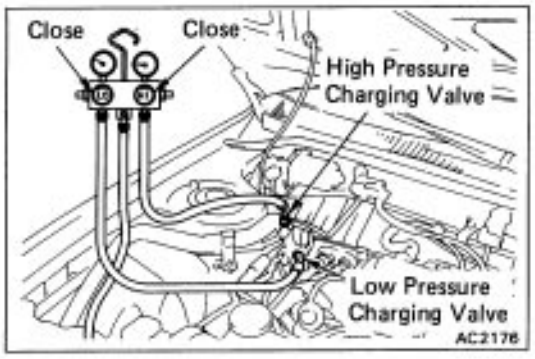

Installation of Manifold Gauge Set

1. CLOSE BOTH HAND VALVES OF MANIFOLD GAUGE SET

2. INSTALL CHARGING HOSES OF GAUGE SET TO CHARGING VALVES

Connect the low pressure hose to the low pressure charging valve and the high pressure hose to the high pressure charging valve. Tighten the hose nuts by hand.

HINT: Do not apply compressor oil to the seat of the connection.

COMPRESSOR

ON–VEHICLE INSPECTION

1. INSTALL MANIFOLD GAUGE SET

(See page AC–15)

2. RUN ENGINE AT APPROX. 1,500 RPM

3. CHECK COMPRESSOR FOR FOLLOWING:

(a) High pressure gauge reading is not lower and low pressure gauge reading is not higher than normal.

(b) Metallic sound

(c) Leakage from shaft seal

If defects are found, repair the compressor.

4. CHECK MAGNETIC CLUTCH

(a) Inspect the pressure plate and the rotor for signs of oil.

(b) Check the clutch bearings for noise and grease leakage.

(e) Using an ohmmeter, measure the resistance of the stator coil between the clutch lead wire and ground.

Standard resistance: 3.4 – 3.8 Ω at 20˚C (68˚F)

If resistance value is not as specified, replace the coil.

(d) Connect the positive (+) lead from the battery to terminal 1, check that the magnetic clutch is energized.

If magnetic clutch is not energized, replace the coil.

NOTICE: Do not short the positive (+) lead wire on the vehicle by applying battery voltage.

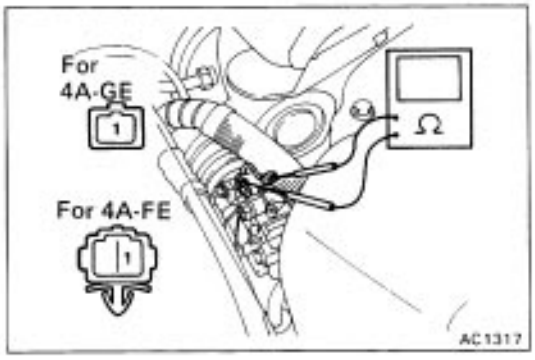

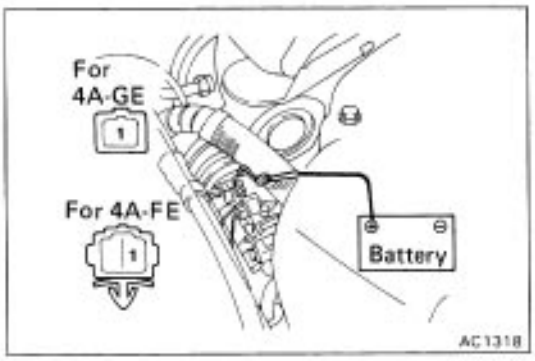

5. CHECK TEMPERATURE SWITCH

(4A–GE engine model only)

Check that the continuity between terminals C and D.

If continuity is not as specified, replace the switch.

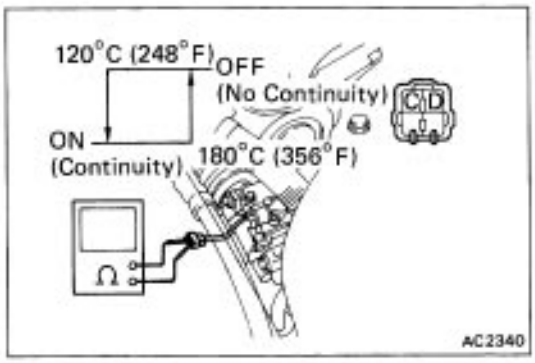

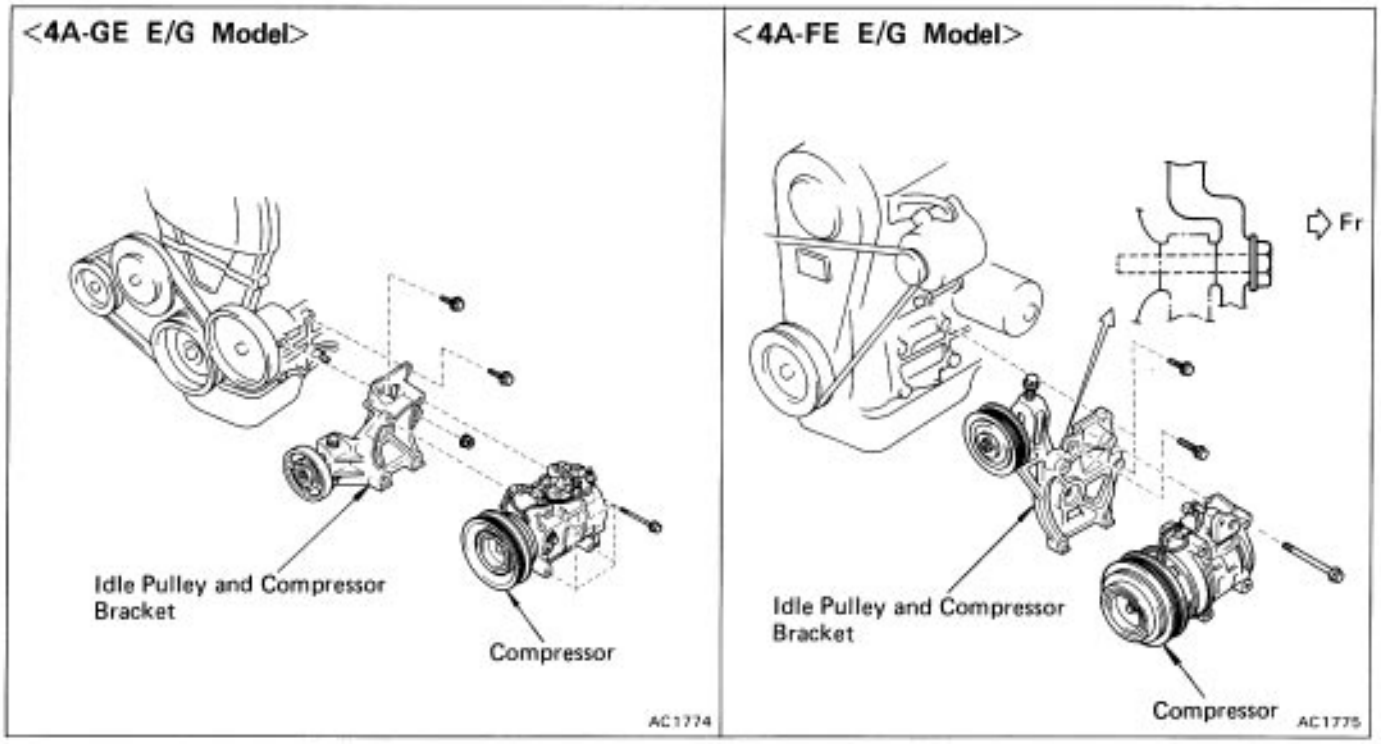

REMOVAL OF COMPRESSOR

1. RUN ENGINE AT IDLE SPEED FOR 10 MINUTES WITH AIR CONDITIONING ON

2. STOP ENGINE

3. DISCONNECT NEGATIVE CABLE FROM BATTERY

4. DISCONNECT CONNECTOR FOR MAGNETIC CLUTCH, TEMPERATURE SWITCH

5. DISCHARGE REFRIGERANT FROM REFRIGERATION SYSTEM

6. DISCONNECT TWO HOSES FROM COMPRESSOR SERVICE VALVES

Cap the open fitting immediately to keep moisture out of the system.

7. REMOVE COMPRESSOR

(a) Loosen the drive belt.

(b) Remove the compressor mounting bolts and the compressor.

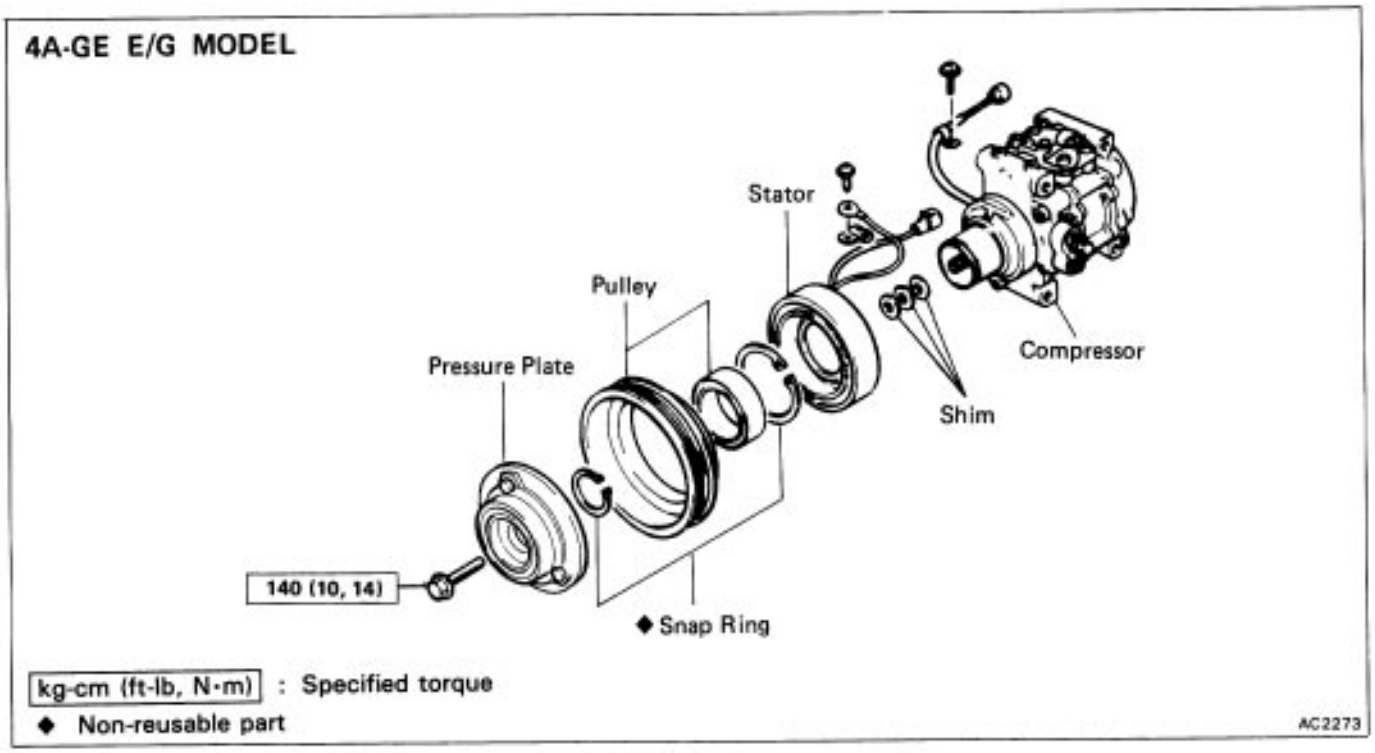



DISASSEMBLY OF MAGNETIC CLUTCH

(4A–GE EIG MODEL)

1. REMOVE PRESSURE PLATE

(a) Using a socket and SST, remove the shaft nut.
SST 07112–76060

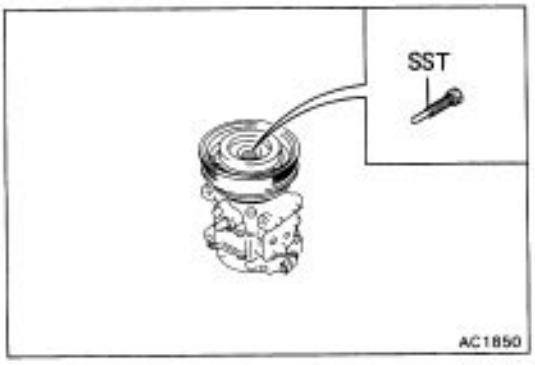

(b) Install SST to the pressure plate.
SST 07112–66040



(c) Using SST and the socket, remove the pressure plate.
SST 07112–76060 and 07112–66040

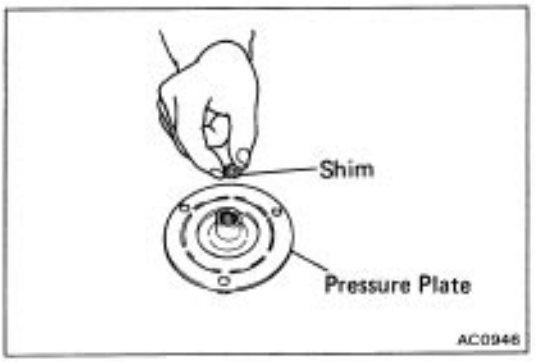

(d) Remove the shims from the shaft.

2. REMOVE ROTOR

(a) Using SST, remove the snap ring.
SST 07114–84020



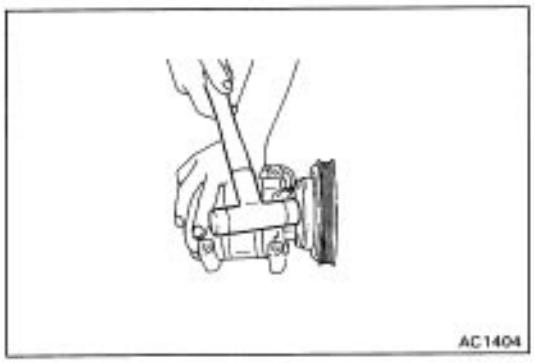

(b) Using a plastic hammer, tap the rotor off the shaft.
NOTICE: Be careful not to damage the pulley when tapping on the rotor.

3. REMOVE STATOR

(a) Disconnect the stator lead wires from the compressor housing.

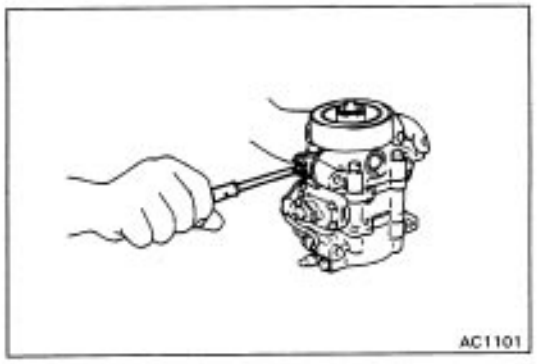

(b) Using SST, remove the snap ring.
SST 07114–84020

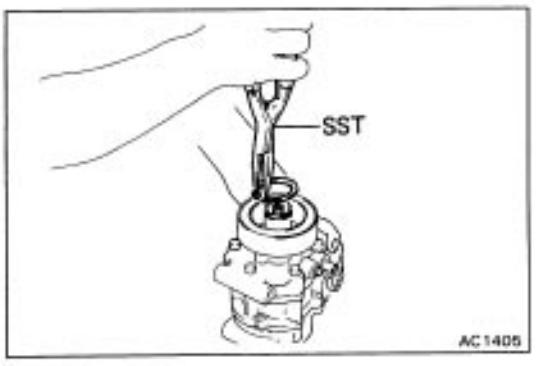

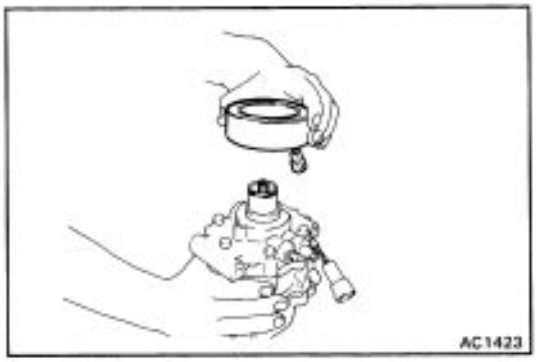

(c) Remove the stator.

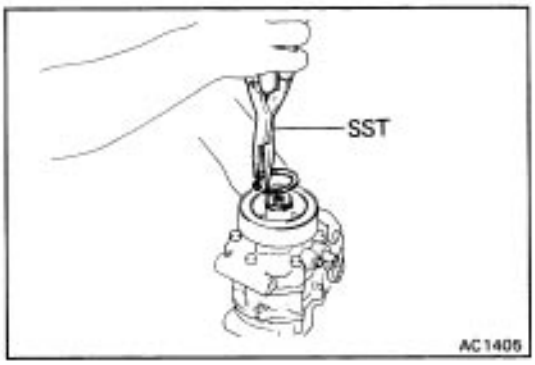

ASSEMBLY OF MAGNETIC CLUTCH

1. INSTALL STATOR

(a) Install the stator on the compressor.

(b) Using SST, install the new snap ring.
SST 07114–84020

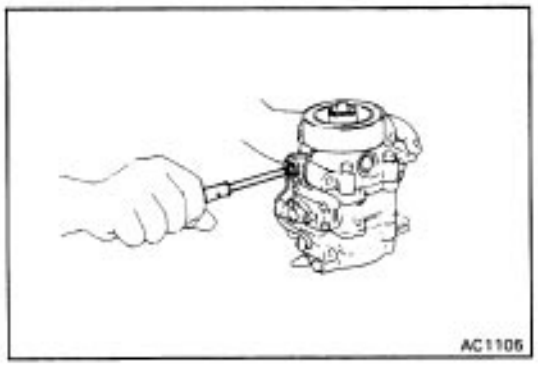

(c) Connect the stator lead wires to the compressor housing.



2. INSTALL ROTOR

(a) Install the rotor on the compressor shaft.

(b) Using SST, install the new snap ring.
SST 07114–84020

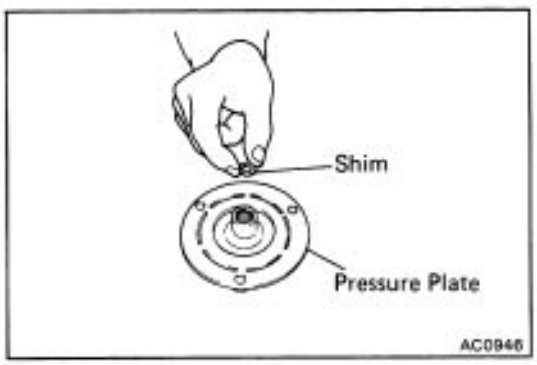

3. INSTALL PRESSURE PLATE

(a) Adjust the clearance between the pressure plate and rotor by putting shims on the compressor shaft.

Standard clearance: 0.5 + 0.15 mm
(0.020 ± 0.0059in.)

If the clearance is not within tolerance, change the number of shims to obtain the standard clearance.

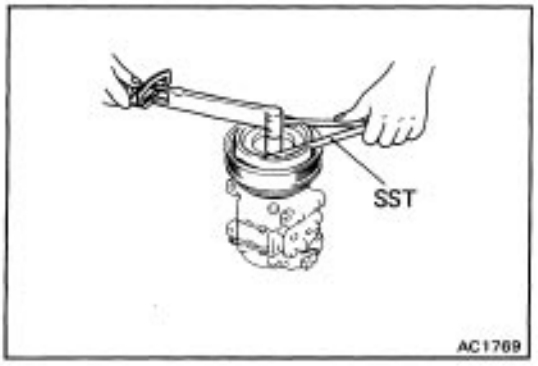

(b) Using SST and torque wrench, install the shaft nut.
SST 07112–76060
Torque: 140 kg–cm (10 ft–lb, 14 N–m)

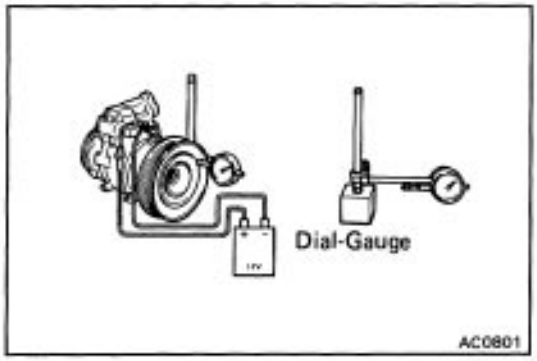

CHECK CLEARANCE OF MAGNETIC CLUTCH
(4A GE E/G MODEL)
(a) Set the dial–gauge to the pressure plate of the magnetic clutch.
(b) Connect the magnetic clutch lead wire to the positive (+) terminal of the battery.
(c) Check the clearance between the pressure plate and rotor, when connect the negative (–) terminal of the battery.
Standard clearance: 0.5 ± 0.15 mm
(0.020 ± 0.0059 in.)
If the clearance is not within standard clearance adjust the clearance using shims to obtain the standard clearance.

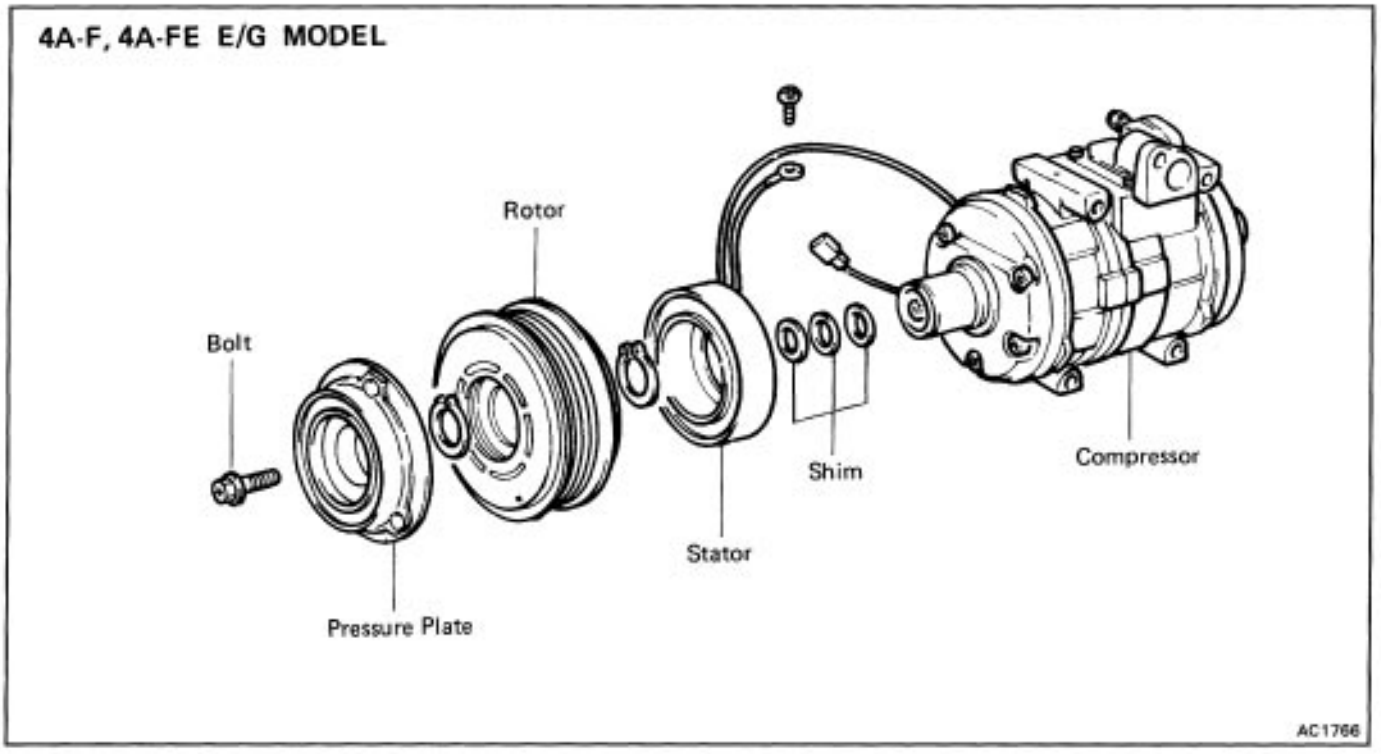

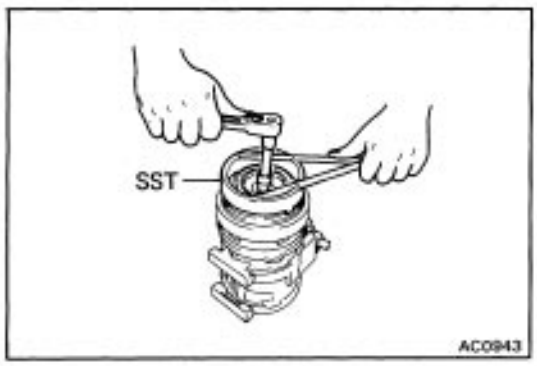

DISASSEMBLY OF MAGNETIC CLUTCH

(4A–FE E/G MODEL)

1. REMOVE PRESSURE PLATE

(a) Using SST and socket, remove the shaft bolt.
SST 07112–76060

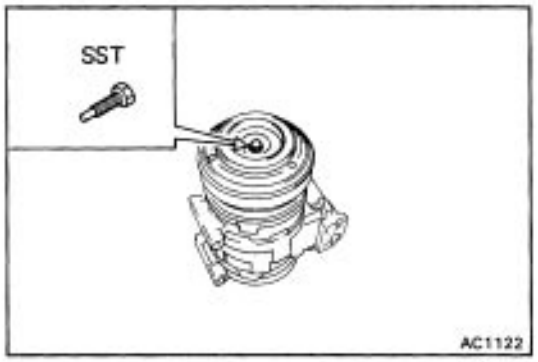

(b) Install SST to the pressure plate.
SST 07112–66040

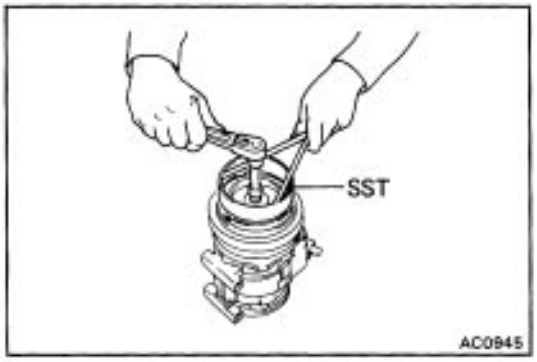

(c) Using SST and the socket, remove the pressure plate.
SST 07112–76060

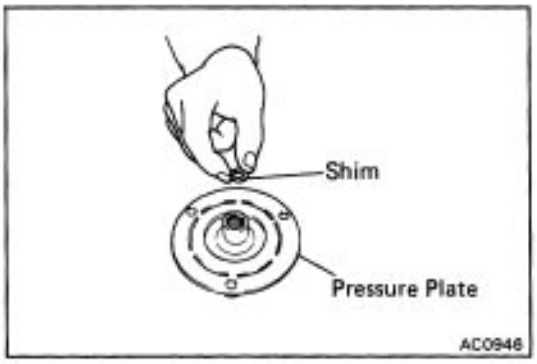

(d) Remove the shims from the pressure plate.

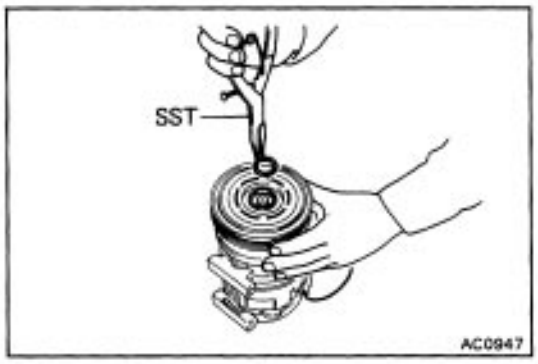

2. REMOVE ROTOR

(a) Using SST, remove the snap ring.
SST 07114–84020

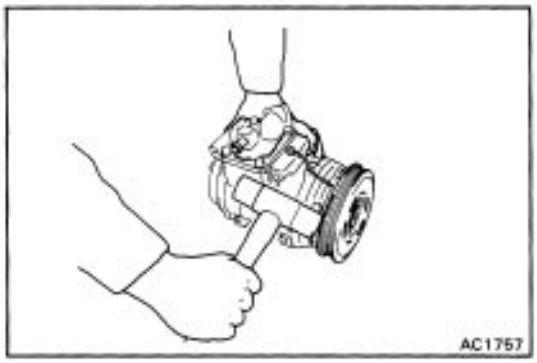

(b) Using a plastic hammer, tap the rotor off the shaft.
NOTICE: Be careful not to damage the pulley when tapping on the rotor.

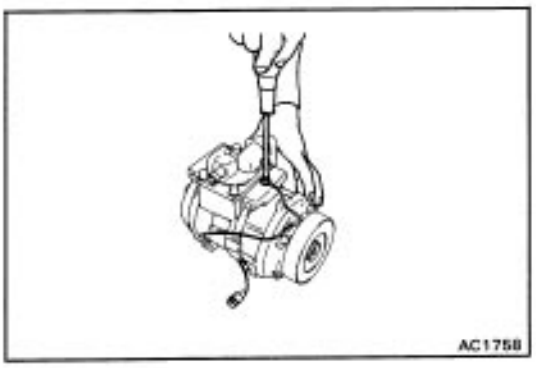

3. REMOVE STATOR

(a) Disconnect the stator lead wire from the compressor housing.

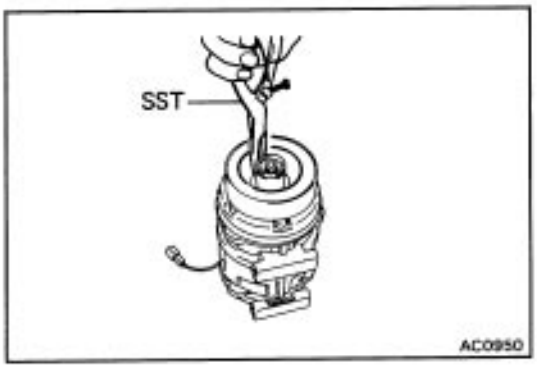

(b) Using SST, remove the snap ring.
SST 07114–84020

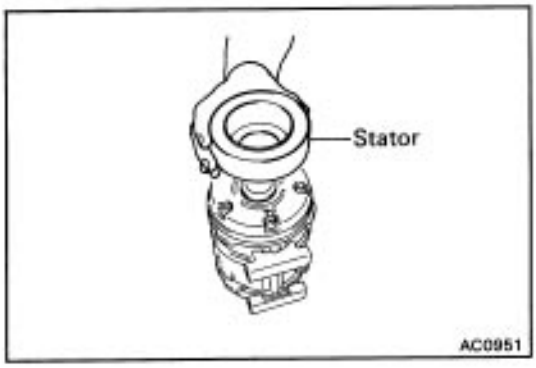

(c) Remove the stator.

ASSEMBLY OF MAGNETIC CLUTCH

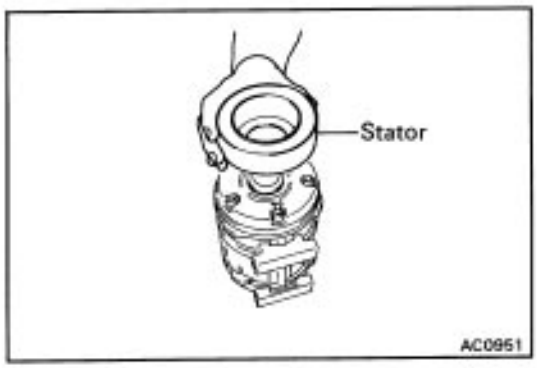

1. INSTALL STATOR

(a) Install the stator on the compressor.

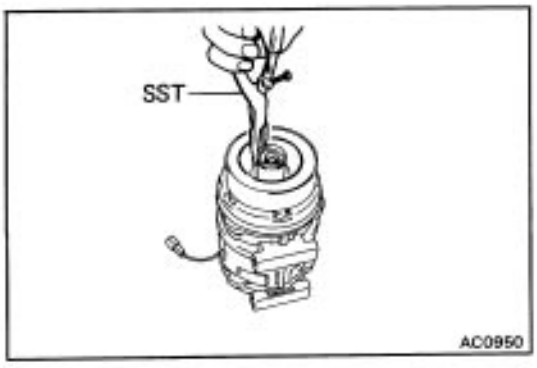

(b) Using SST, install the new snap ring.
SST 07114–84020

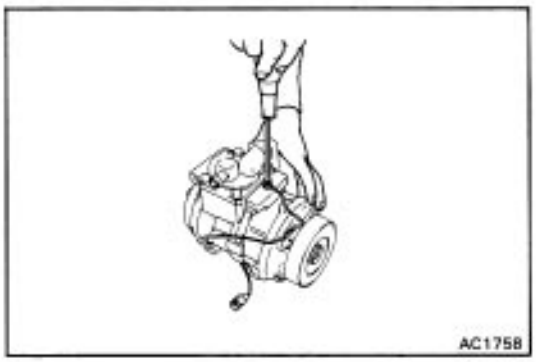

(c) Connect the stator lead wires to the compressor housing.

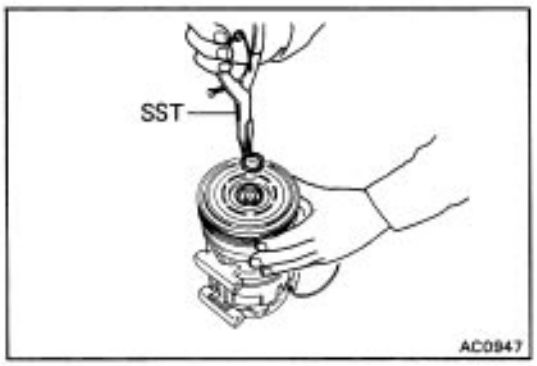

2. INSTALL ROTOR

(a) Install the rotor on the compressor shaft.

(b) Using SST, install the new snap ring.

SST 07114–84020

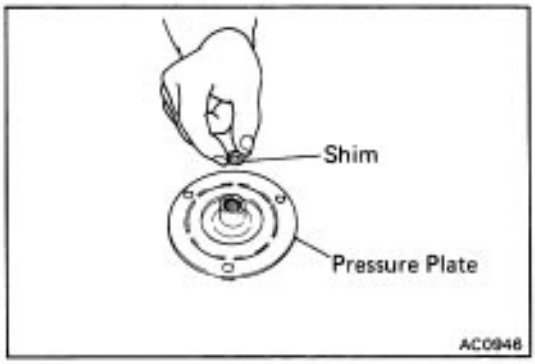

3. INSTALL PRESSURE PLATE

(a) Install the shims to the pressure plate.

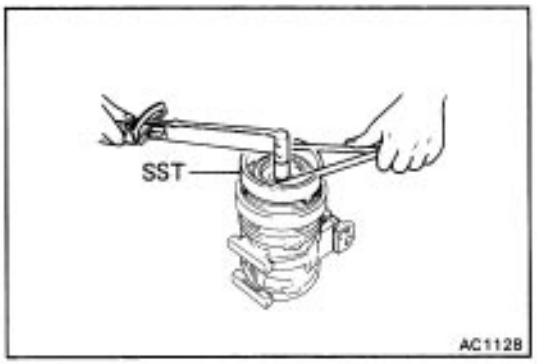

(b) Using SST and torque wrench, install the shaft bolt.

SST 07112–76060

Torque: 140 kg–cm (10 ft–lb, 14 N–m)

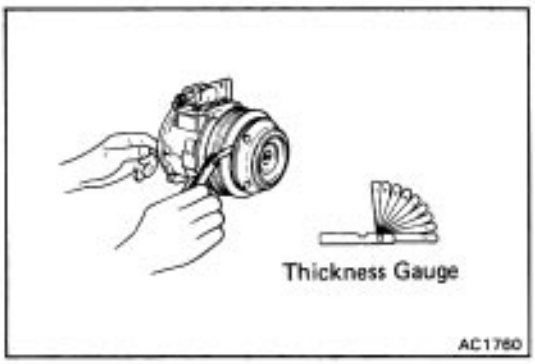

4. CHECK CLEARANCE OF MAGNETIC CLUTCH

Check the clearance between the pressure plate and rotor using thickness gauge.

Standard clearance: 0.5 ± 0.15 mm
(0.020 ± 0.0059 in.)

If the clearance is not within tolerance, change the number of shims to obtain the standard clearance.

INSTALLATION OF COMPRESSOR

(See page AC–17)

1. INSTALL COMPRESSOR WITH FOUR MOUNTING BOLTS

Torque: 250 kg–cm (18 ft–lb, 25 N–m)

2. INSTALL DRIVE BELT

(a) Install the drive belt to the pulley.

(b) Tighten the belt with the adjusting bolts.

(c) Adjust drive belt tension

(See step 2 and 3 on page AC–14)

3. CONNECT TWO HOSES TO COMPRESSOR SERVICE VALVES

Torque:

Discharge line 250 kg–cm (18 ft–lb, 25 N–m)

Suction line 250 kg–cm (18 ft–lb, 25 N–m)

4. CONNECT EACH LEAD WIRE TO WIRING HARNESS

5. CONNECT NEGATIVE CABLE TO BATTERY

6. EVACUATE AIR FROM AIR CONDITIONING SYSTEM

7. CHARGE AIR CONDITIONING SYSTEM WITH REFRIGERANT AND CHECK FOR GAS LEAKAGE

Specified amount: 650 – 750 g (1.4 – 1.7 lb)

RECEIVER

ON–VEHICLE INSPECTION

CHECK SIGHT GLASS, FUSIBLE PLUG AND FITTINGS FOR LEAKAGE

Use a gas leak tester. Repair as necessary.

REMOVAL OF RECEIVER

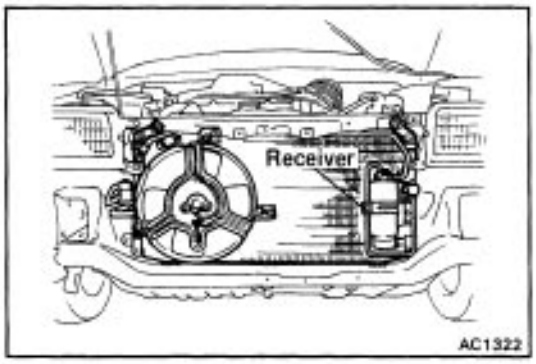

(See page AC–6)

1. DISCHARGE REFRIGERATION SYSTEM

2. DISCONNECT TWO LIQUID TUBES FROM RECEIVER

HINT: Cap the open fittings immediately to keep moisture out of the system.

3. REMOVE RECEIVER FROM RECEIVER HOLDER

INSTALLATION OF RECEIVER

(See page AC–6)

1. INSTALL RECEIVER IN RECEIVER HOLDER

HINT: Do not remove the blind plugs until ready for connection.

2. CONNECT TWO LIQUID TUBES TO RECEIVER

Torque: 55 kg–cm (48 in.–lb, 5.4 N–m)

3. IF RECEIVER WAS REPLACED, ADD COMPRESSOR OIL TO COMPRESSOR

Add 20cc (0.7 fl.oz.)

Compressor oil:

4A–GE E/G	DENSOOIL 7 or equivalent
4A–FE EIG	DENSOOIL 6, SUNISO No. 5GS or equivalent

4. EVACUATE AIR FROM AIR CONDITIONING SYSTEM

5. CHARGE AIR CONDITIONING SYSTEM WITH REFRIGERANT AND CHECK FOR GAS LEAKAGE

Specified amount: 650 – 750 g (1.4 – 1.7 lb)

CONDENSER

ON–VEHICLE INSPECTION

1. CHECK CONDENSER FINS FOR BLOCKAGE OR DAMAGE

If the fins are clogged, wash them with water and dry with compressed air.

NOTICE: Be careful not to damage the fins.

If the fins are bent, straighten them with a screwdriver or pliers.

2. CHECK CONDENSER FITTINGS FOR LEAKAGE

Repair as necessary.

REMOVAL OF CONDENSER

(See page AC–6)

1. DISCHARGE REFRIGERATION SYSTEM

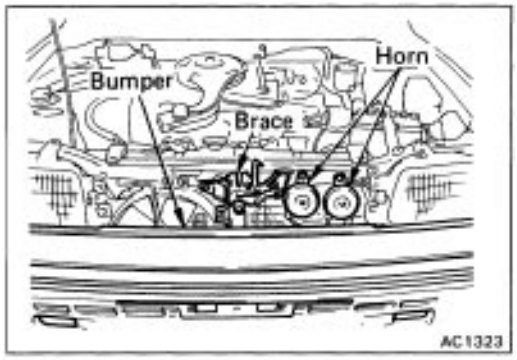

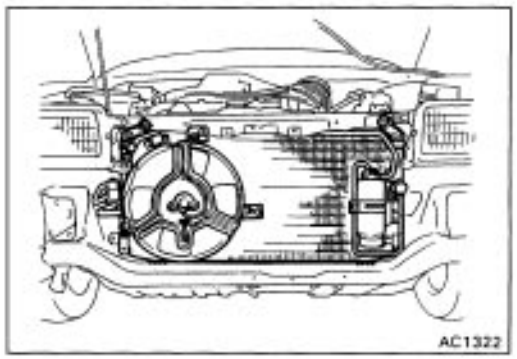

2. REMOVE FOLLOWING PARTS:

(a) Front grille
(b) Hood lock and center brace
(c) Condenser fan motor
(d) Horn
(e) Bumper
(f) Oil cooler (4A–GE engine only)

HINT: Oil cooler hoses are not removed.

3. DISCONNECT LIQUID TUBE AND DISCHARGE HOSE FROM CONDENSER OUTLET FITTING

HINT: Cap the open fittings immediately to keep moisture out of the system.

4. REMOVE CONDENSER

Remove the two bolts.

INSTALLATION OF CONDENSER

(See page AC–6)

1. INSTALL CONDENSER

2. CONNECT LIQUID TUBE, DISCHARGE HOSE TO CONDENSER

Torque:

Discharge hose	**250 kg–cm (18 ft–lb, 25 N–m)**
Liquid tube	**135 kg–cm (10 ft–lb, 13 N–m)**

3. INSTALL FOLLOWING PARTS:

(a) Front grille
(b) Hood lock and center brace
(c) Condenser fan motor
(d) Horn
(e) Bumper
(f) Oil cooler (4A–GE. engine only)

4. IF CONDENSER WAS REPLACED, ADD COMPRESSOR OIL TO COMPRESSOR

Add 40 – 50cc (1.4 – 1.7 fl.oz.)

Compressor oil:

4A–GE E/G	**DENSOOIL 7 or equivalent**
4A–FE EIG	**DENSOOIL 6, SUNISO No. 5SG or equivalent**

5. EVACUATE AIR FROM AIR CONDITIONING SYSTEM

6. CHARGE AIR CONDITIONING SYSTEM WITH REFRIGERANT AND CHECK FOR GAS LEAKAGE

Specified amount: 650 – 750 g (1.4 – 1.7 lb)

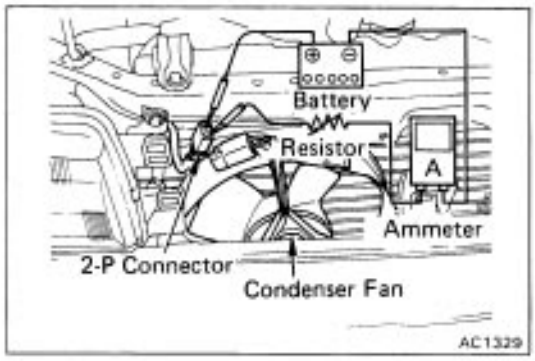

CONDENSER FAN MOTOR

(See page AC–6)

1. INSPECT FAN MOTOR

(a) Disconnect 2–P connector of the fan motor.
(b) Using wire harness, apply battery voltage to the connector.
(c) Confirm smooth rotation of the motor within the specified current flow.

Standard current: 6.7 ± 0.7A

If defective, replace the motor.

INSPECTION OF CONDENSER FAN MOTOR

CHECK OPERATION OF FAN MOTOR

HINT: The fan motor operates at two speeds depending on the water temperature and the A/C switch.

A/C switch	Magnetic clutch	Water temperature	Fan motor speed
OFF or ON	OFF	83°C (181°F) or below	Off
		90°C (194°F) or above	High
ON	ON	83°C (181°F) or below	Low
		90°C (194°F) or above or the refrigerant pressure is approx. 15.5 kg/cm^2 (220 psi, 1,520 kPa) or greater.	High

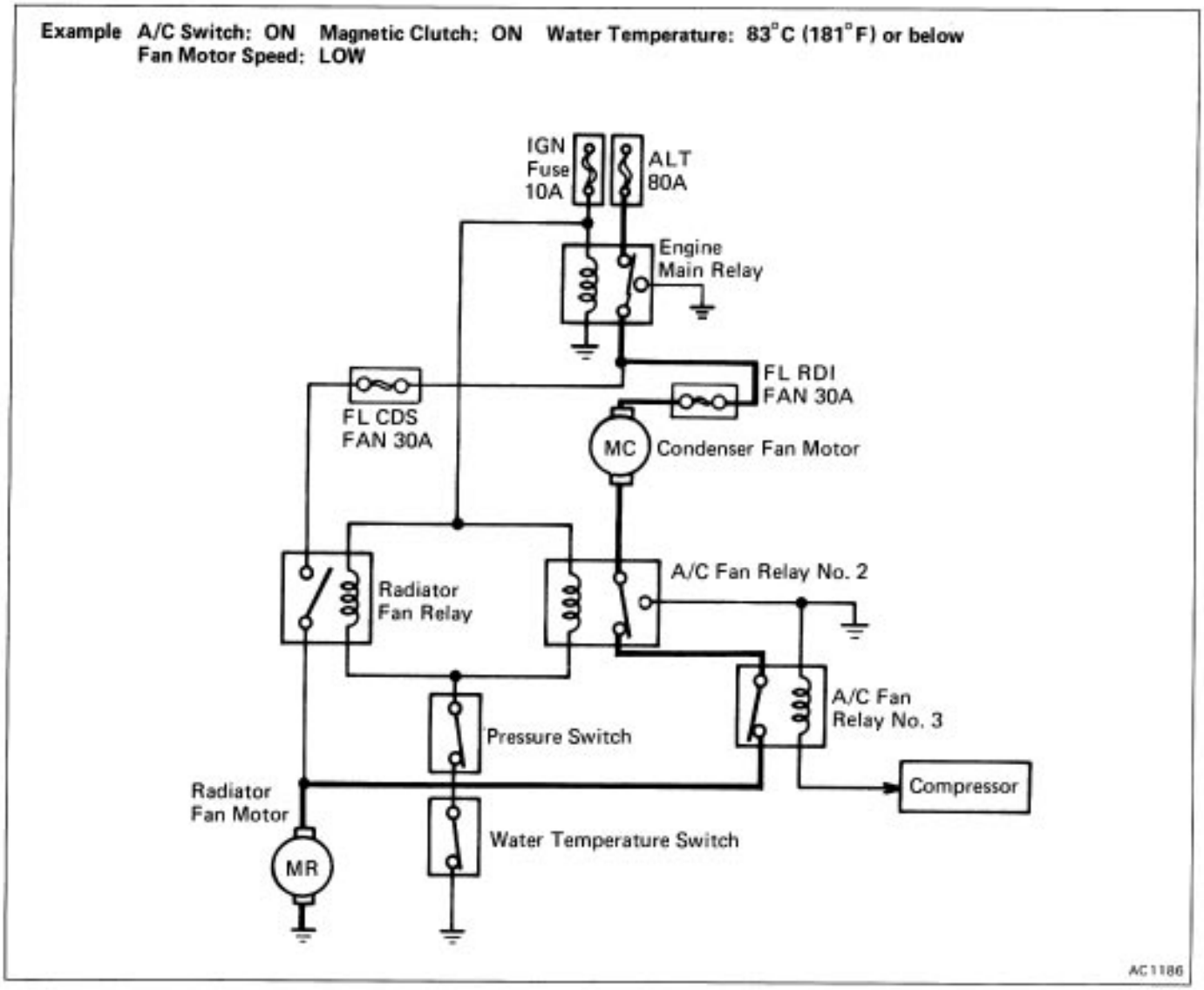

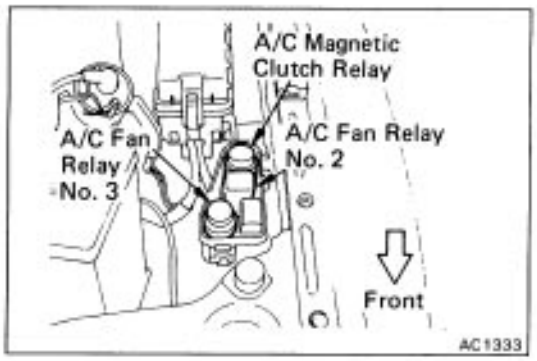

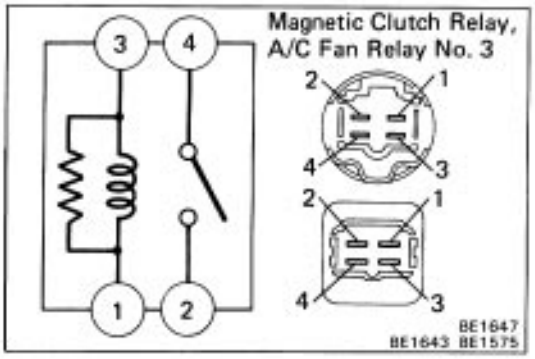

RELAYS

INSPECT RELAY CONTINUITY

CHECK MAGNETIC CLUTCH RELAY AND A/C FAN RELAY NO.3 CONTINUITY

Terminal / Condition	1	2	3	4
Constant	○	∿	○	
Apply battery voltage to terminals 1 and 3		○		○

If continuity is not as specified, replace the relay.

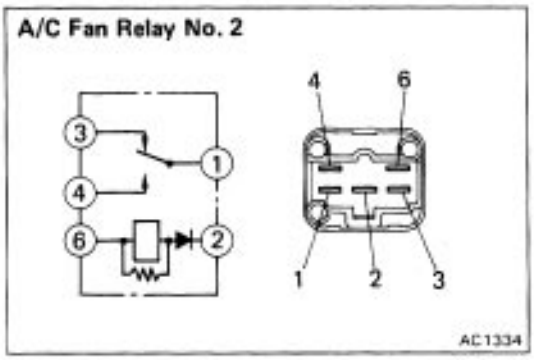

A/C RELAY N0.2

Condition \ Terminal	1	2	3	4	6
Constant	○		○		○
		○	◀	W	
Apply battery voltage to terminals 6(+) and 2(–)	○			○	

If continuity is not as specified, replace the relay.

PRESSURE SWITCH

(See page AC–7)

ON–VEHICLE INSPECTION

1. DISCONNECT CONNECTOR OF PRESSURE SWITCH

2. INSPECT PRESSURE SWITCH

(a) Install the manifold gauge set.

(b) Observe the gauge reading.

(c) Check the continuity between the two terminals of the pressure switch shown in the below.

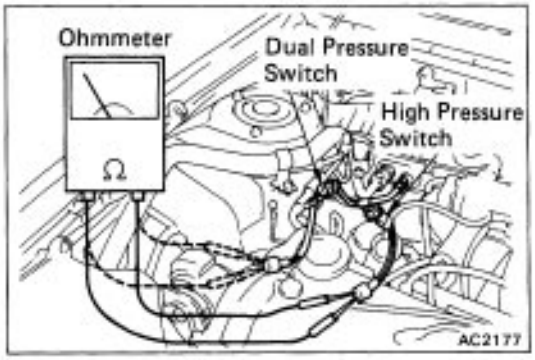

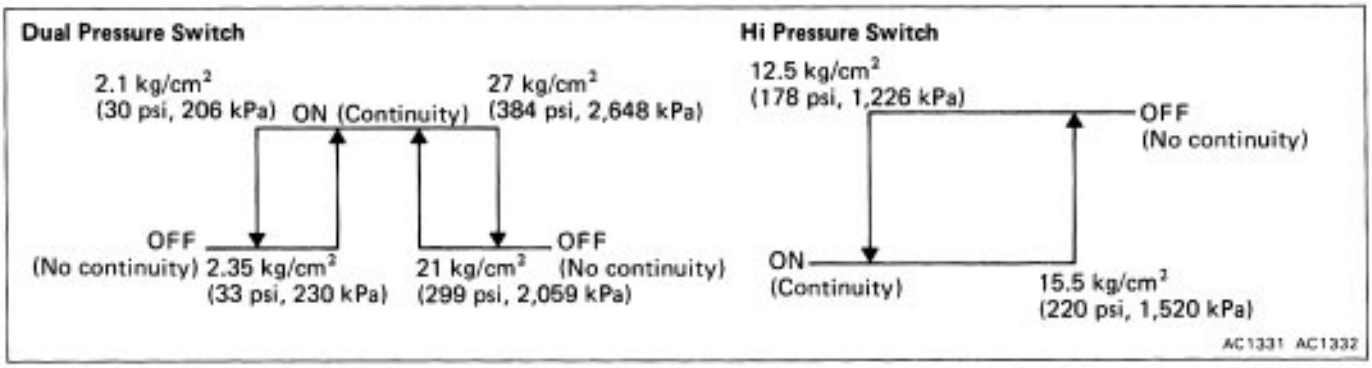

If defective, replace the pressure switch.

3. CONNECT CONNECTOR OF PRESSURE SWITCH

WATER TEMPERATURE SWITCH

INSPECT SWITCH CONTINUITY

Inspect the switch continuity between each terminal at each the water temperature.

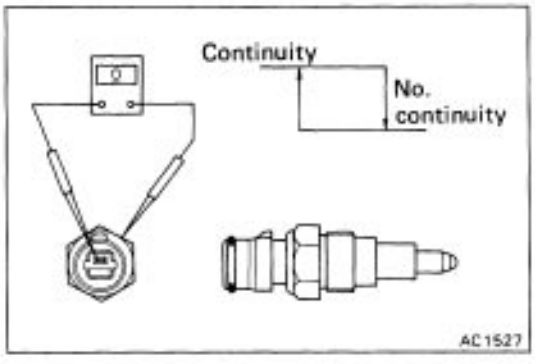

Switch \ Specified value	Continuity	No continuity
A	83°C (181°F) or less	90°C (194°F) or more
B	98°C (208°F) or less	103°C (217°F) or more

Connector color (Wire Harness Side);

A: WHITE – For condenser fan

B: BLUE – For A/C cut (4A–FE Engine: with A/T)

COOLING UNIT

(See page AC–6)

ON–VEHICLE INSPECTION OF EXPANSION VALVE

1. CHECK QUANTITY OF REFRIGERANT GAS DURING REFRIGERATION CYCLE

2. INSTALL MANIFOLD GAUGE SET

(See page AC–15)

3. RUN ENGINE

Run the engine at 2,000 rpm for at least 5 minutes.

4. CHECK EXPANSION VALVE

If the expansion valve is clogged, the low pressure reading will drop to 0 kg/cm^2 (0 psi, 0 kPa), otherwise it is OK.

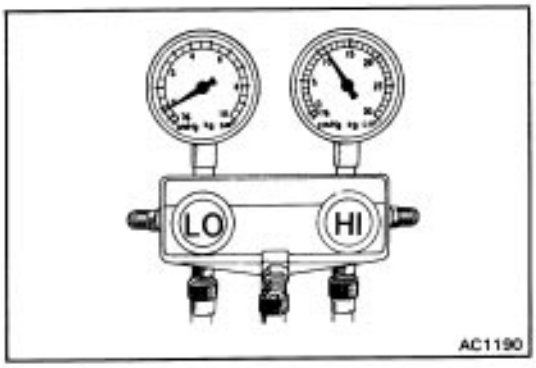

REMOVAL OF COOLING UNIT

1. DISCONNECT NEGATIVE CABLE FROM BATTERY

2. DISCHARGE REFRIGERATION SYSTEM

3. DISCONNECT SUCTION TUBE FROM COOLING UNIT OUTLET FITTING

4. DISCONNECT LIQUID TUBE FROM COOLING UNIT INLET FITTING

HINT: Cap the open fittings immediately to keep moisture out of the system.

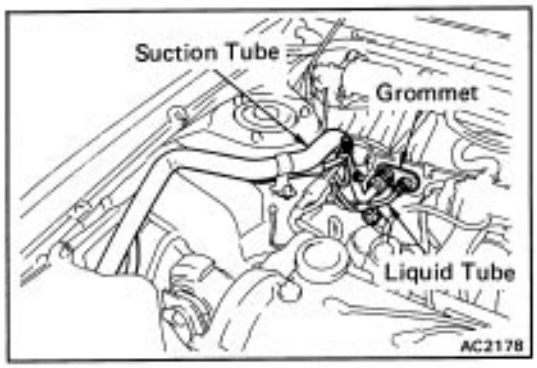

5. REMOVE GROMMETS FROM INLET AND OUTLET FITTINGS

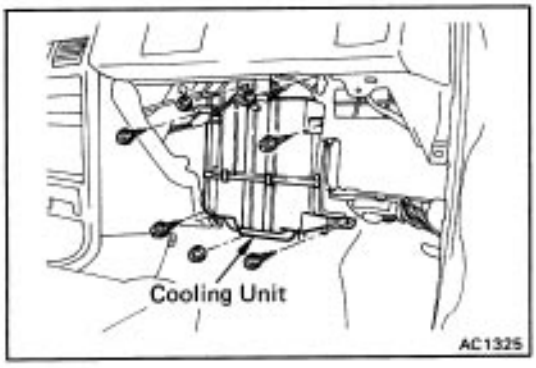

6. REMOVE GLOVE BOX COMPARTMENT

7. DISCONNECT CONNECTORS

8. REMOVE COOLING UNIT

Remove four nuts and four screws.

DISASSEMBLY OF COOLING UNIT

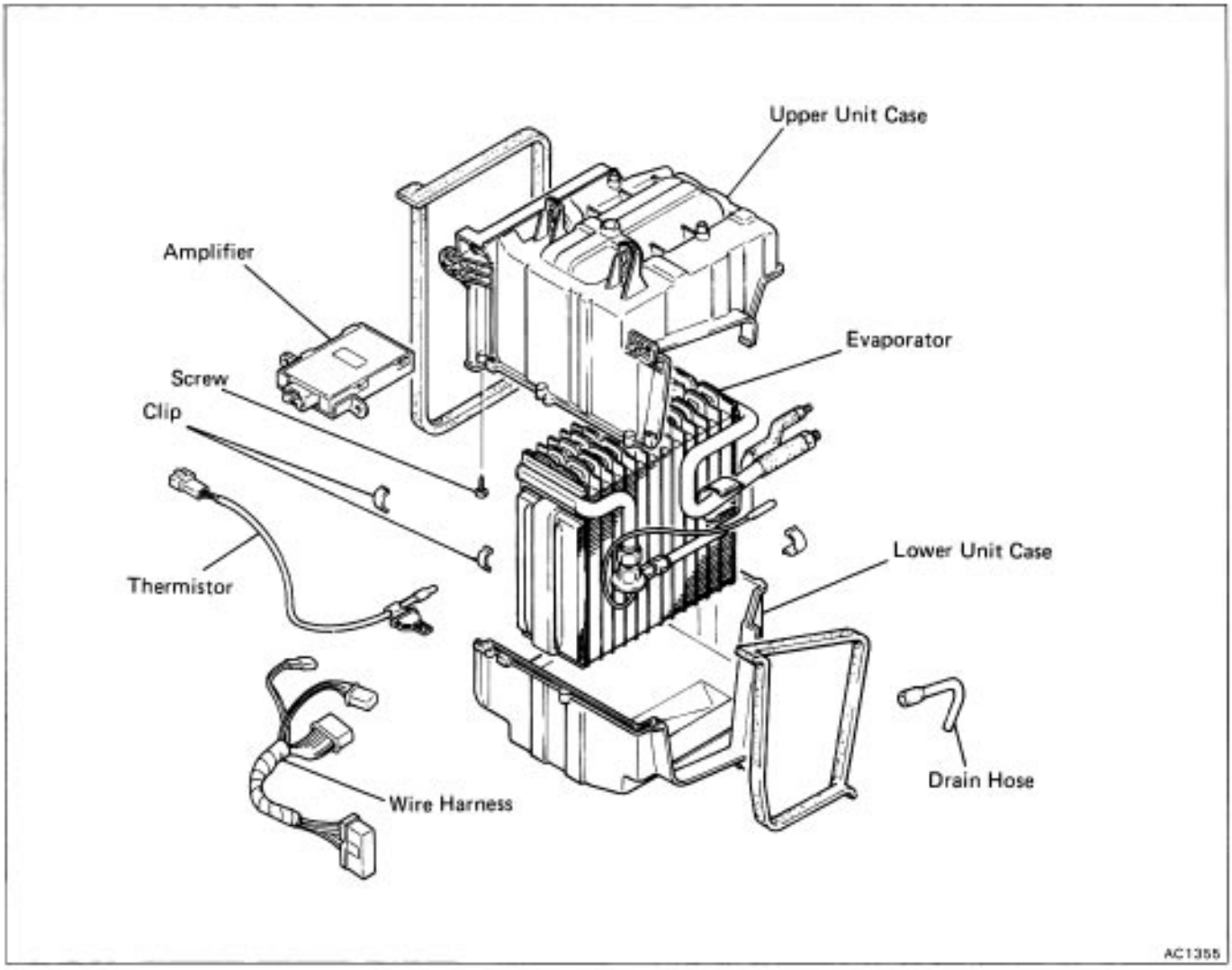

1. REMOVE LOWER AND UPPER UNIT CASE

(a) Disconnect connectors.
(b) Remove the wire harness.
(c) Remove four clips.
(d) Remove four screws.
(e) Remove upper unit case.
(f) Remove lower unit case.

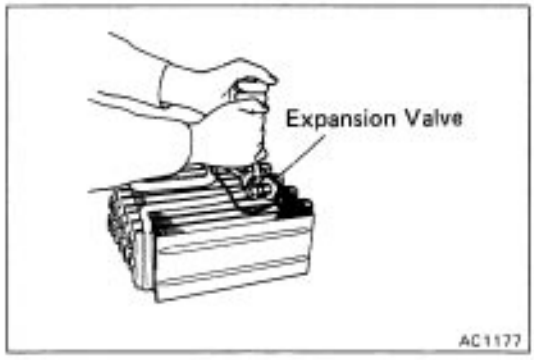

2. REMOVE EXPANSION VALVE

(a) Disconnect the liquid tube from the inlet fitting of the expansion valve.
(b) Remove the packing and heat sensing tube from suction tube of evaporator.

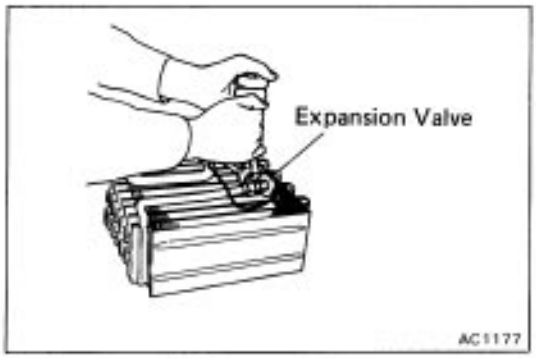

(c) Remove expansion valve.

Evaporator

INSPECTION OF EVAPORATOR

1. CHECK EVAPORATOR FINS FOR BLOCKAGE

If the fins are clogged, clean them with compressed air.

NOTICE: Never use water to clean the evaporator.

2. CHECK FITTINGS FOR CRACKS OR SCRATCHES

Repair as necessary.

ASSEMBLY OF COOLING UNIT

INSTALL COMPONENTS OF EVAPORATOR

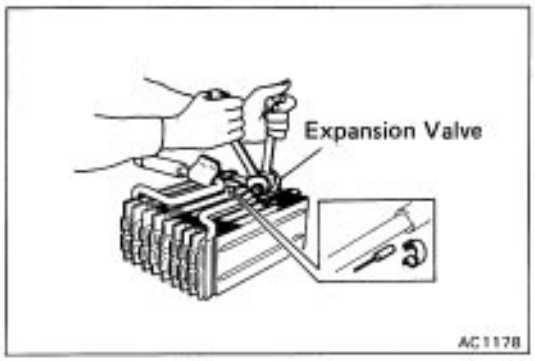

(a) Connect the expansion valve to the inlet fitting of the evaporator. Torque the nut.

Torque: 230 kg–cm (17 ft–lb, 23 N–m)

HINT: Be sure that the 0–rings are positioned on the tube fitting.

(b) Install the holder to the suction tube with heat sensitizing tube.

(c) Connect the liquid tube to the inlet fitting of the expansion valve. Torque the nut.

Torque: 140 kg–cm (10 ft–lb, 14 N–m)

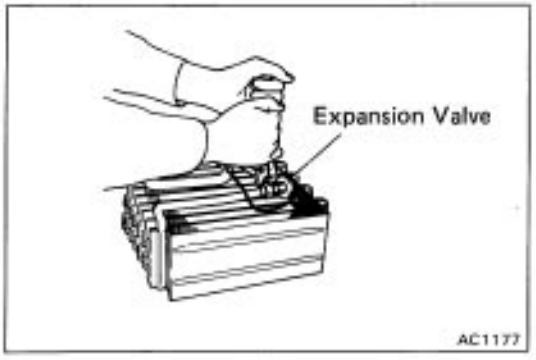

(d) Install lower unit case to the evaporator.

(e) Install thermistor to the evaporator.

(f) Install upper unit case

(g) Install four screws.

(h) Install four clips.

(i) Install wire harness.

(j) Connect connectors.

INSTALLATION OF COOLING UNIT

1. INSTALL COOLING UNIT

Install the cooling unit with three nuts and four bolts.

2. CONNECT CONNECTORS

3. INSTALL GLOVE BOX COMPARTMENT

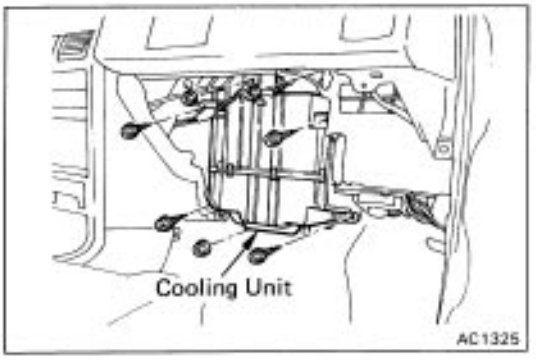

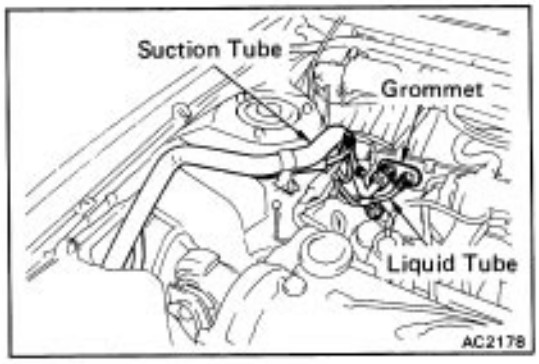

4. INSTALL GROMMETS ON INLET AND OUTLET FITTINGS

5. CONNECT LIQUID TUBE TO COOLING UNIT INLET FITTING

Torque the nut.

Torque: 130 kg–cm (10 ft–lb, 13 N–m)

6. CONNECT SUCTION TUBE TO COOLING UNIT OUTLET FITTING

Torque the nut.

Torque: 330 kg–cm (24 ft–lb, 32 N–m)

7. IF EVAPORATOR WAS REPLACED, ADD COMPRESSOR OIL TO COMPRESSOR

ADD 40 – 50 cc (1.4 – 1.7 fl.oz.)

4A–GE EIG	**DENSOOIL 7 or equivalent**
4A–FE E/G	**DENSOOIL 6, SUNISO No.5GS or equivalent**

8. EVACUATE AIR FROM AIR CONDITIONING SYSTEM

9. CHARGE AIR CONDITIONING SYSTEM WITH REFRIGERANT AND CHECK FOR GAS LEAKAGE

Specified amount: 600 – 750 g (1.3 – 1.7 lb)

REFRIGERANT LINES

(See page AC–6)

ON–VEHICLE INSPECTION

1. INSPECT HOSES AND TUBES FOR LEAKAGE

Use a gas leak tester. Replace, if necessary.

2. CHECK THAT HOSE AND TUBE CLAMPS ARE NO1 LOOSE

Tighten or replace, as necessary.

REPLACEMENT OF REFRIGERANT LINES

1. DISCHARGE REFRIGERATION SYSTEM

2. REPLACE FAULTY TUBE OR HOSE

HINT: Cap the open fittings immediately to keep mois–ture out of the system.

3. TIGHTENING TORQUE FOR O–RING FITTINGS AND BOLTED TYPE FITTINGS (See page AC–7)

4. EVACUATE AIR FROM AIR CONDITIONING SYSTEM

5. CHARGE AIR CONDITIONING SYSTEM WITH REFRIGERANT AND CHECK FOR GAS LEAKAGE

Specified amount: 650 – 750 g (1.4 – 1.7 lb)

THERMISTOR

ON–VEHICLE INSPECTION

(See page AC–6)

1. DISCONNECT NEGATIVE CABLE FROM BATTERY

2. REMOVE GLOVE BOX COMPARTMENT

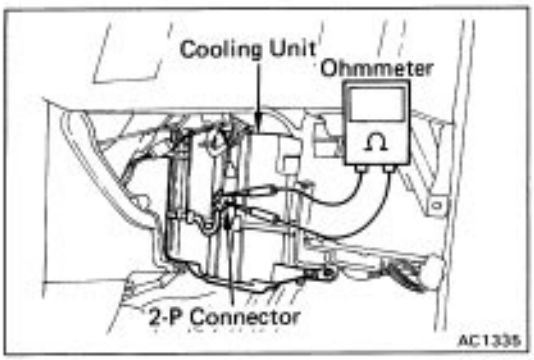

3. CHECK RESISTANCE OF THERMISTOR

Measure the resistance between terminals.

Resistance: 1,500 Ω at 25˚C (75˚F)

If resistance value is not as specified, replace the thermistor.

REMOVAL AND INSPECTION OF THERMISTOR

1. REMOVE AND DISASSEMBLE COOLING UNIT

(See page AC–31)

2. REMOVE THERMISTOR FROM EVAPORATOR

3. CHECK THERMISTOR OPERATION

(a) Place the thermistor in cold water. While varying the temperature of the water, measure the resistance at the connector and, at the same time, measure the temperature of the water with a thermometer.

(b) Compare the two readings on the chart.

If the intersection is not between the two lines, replace the thermistor.

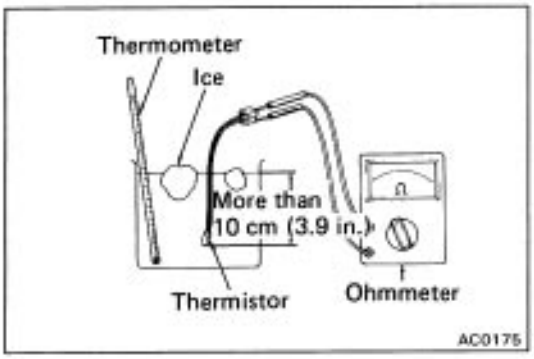

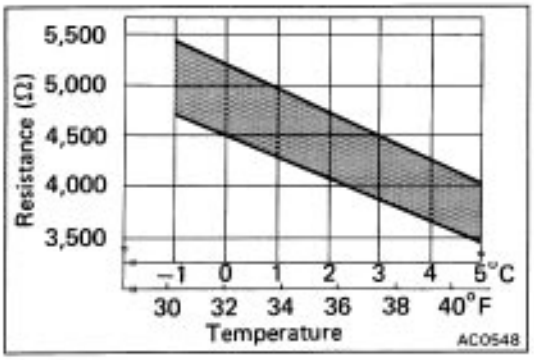

INSTALLATION OF THERMISTOR

1. INSTALL THERMISTOR TO EVAPORATOR

2. ASSEMBLE AND INSTALL COOLING UNIT

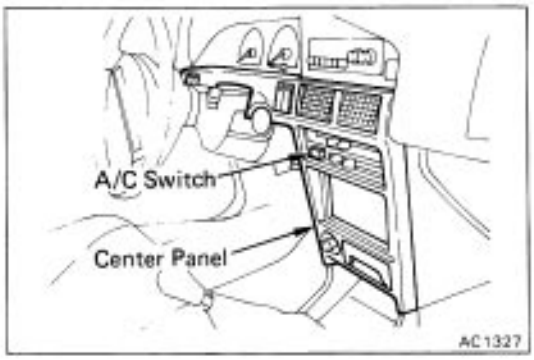

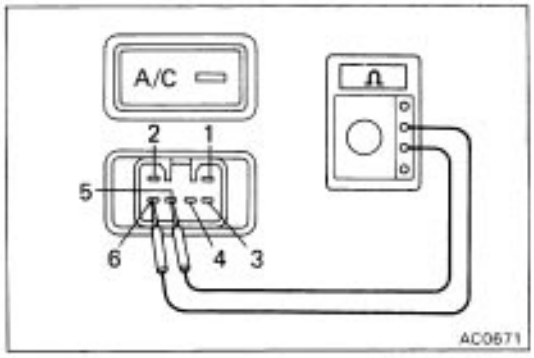

AC SWITCH

1. REMOVE A/C SWITCH

(a) Disconnect negative battery cable.
(b) Remove center panel.
(c) Remove A/C switch.

2. CHECK A/C SWITCH

Inspect the switch continuity between terminals.

Terminal / Switch position	2	6	5	Illumination 1	Illumination 4
OFF					
A/C	○	●	○		

If continuity is not as specified, replace the switch.

3. INSTALL A/C SWITCH

(a) Install A/C switch.
(b) Install center finish panel.
(c) Connect negative battery cable.

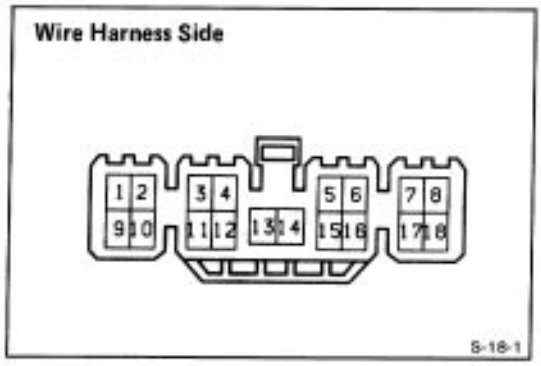

AIR CONDITIONER AMPLIFIER

(See page AC–6)

INSPECTION OF AMPLIFIER

INSPECT AMPLIFIER CIRCUIT

Disconnect the amplifier and inspect the connector o the wire harness side as shown in the chart below.

Test conditions:

(1) Ignition switch: ON

(2) Temperature control lever: MAX COOL

(3) Blower switch: HI

14A–GE engine w/PS)

Check for	Tester connection	Condition	Specified value
Continuity	2 — 9	Constant	Continuity
	8 — Ground	Constant	Continuity
	13 — Ground	Constant	Continuity
Voltage	1 — Ground	Turn A/C switch on	Battery voltage
		Turn A/C switch off	No voltage
	3 — Ground	Turn blower switch on	Battery voltage
		Turn blower switch off	No voltage
	4 — Ground	Turn blower switch on	Battery voltage
		Turn blower switch off	No voltage
	5 — Ground	Turn blower switch on	Battery voltage
		Turn blower switch off	No voltage
	10 — Ground	Start engine	Approx. 10 to 14 V
		Stop engine	No voltage
	12 — Ground	Turn blower switch on	Battery voltage
		Turn blower switch off	No voltage
	18 — Ground	Turn A/C switch on	Battery voltage
		Turn A/C switch off	No voltage
Resistance	9 — 14	Constant	Approx.1.7 kΩ at 25°C (77°F)
	11 — Ground	Constant	Approx. 300 Ω
	14 — 17	Constant	Approx. 250 Ω

If circuit is correct, replace the amplifier.

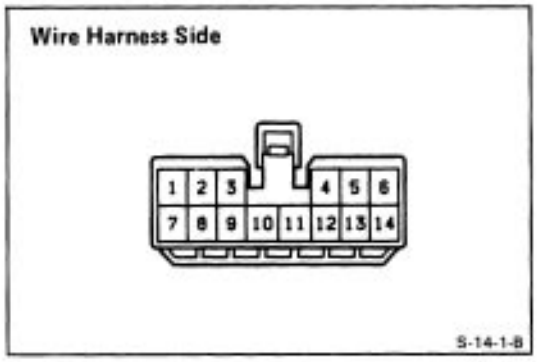

AIR CONDITIONER AMPLIFIER (Cont'd)

(4A–FE engine)

Check for	Tester connection	Condition	Specified value
Continuity	6 – 12	Constant	Continuity
	10 – Ground	Constant	Continuity
Voltage	1 – Ground	Turn blower switch on	Battery voltage
		Turn blower switch off	No voltage
	2 – Ground	Turn blower switch on	Battery voltage
		Turn blower switch off	No voltage
	3 – Ground	Turn blower switch on	Battery voltage
		Turn blower switch off	No voltage
	4 – Ground	Turn A/C switch on	Battery voltage
		Turn A/C switch off	No voltage
	5 – Ground	Turn blower switch on	Battery voltage
		Turn blower switch off	No voltage
	14 – Ground	Start engine	Approx. 10 to 14 V
		Stop engine	No voltage
Resistance	7 – Ground	Constant	Approx. 40 Ω
	11 – 12	Constant	Approx.1.7 kΩ at 25°C (77°F)

If circuit is correct, replace the amplifier.

VACUUM HOSE CIRCUIT

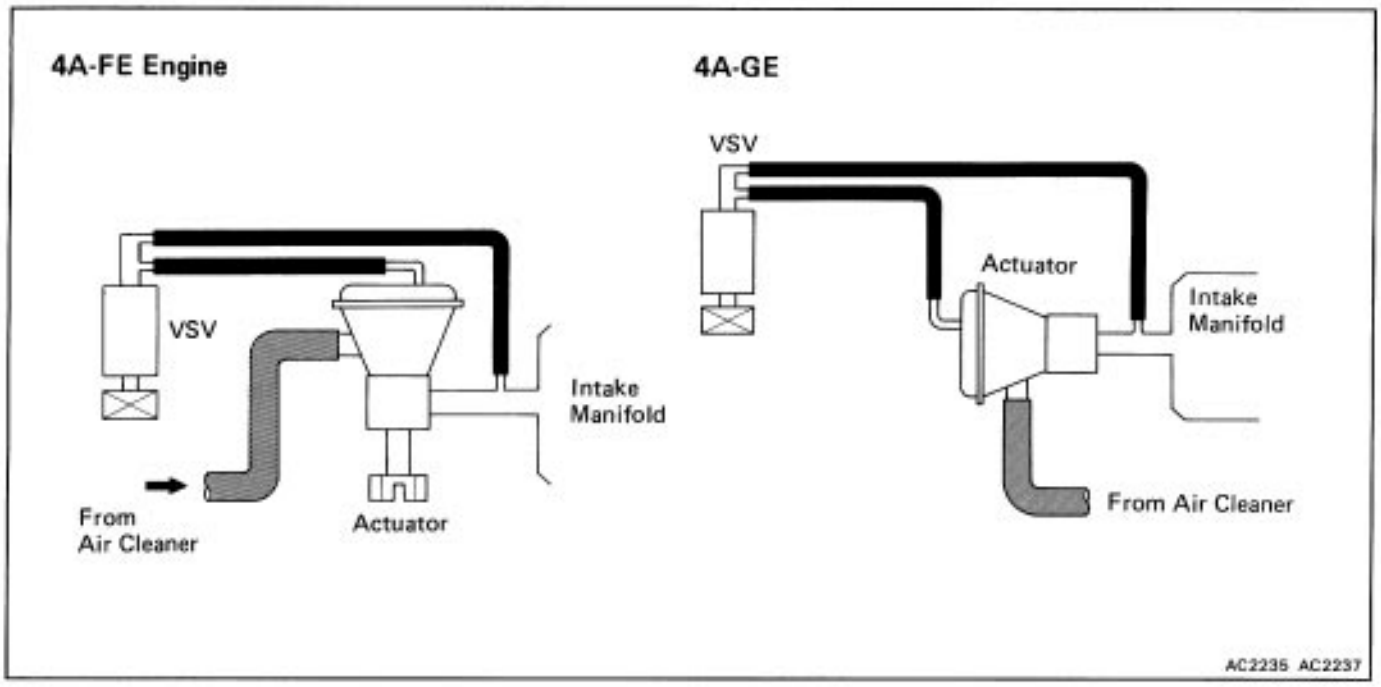

VACUUM SWITCHING VALVE (VSV)

(See page AC–6)

INSPECTION OF VSV

1. REMOVE VSV

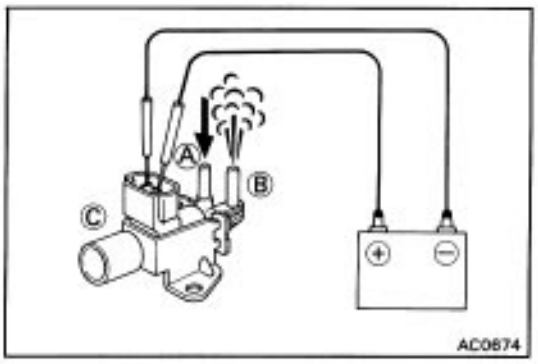

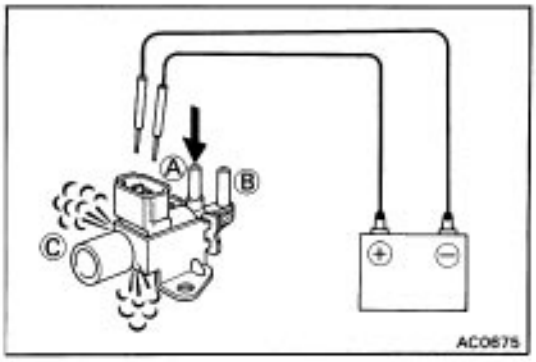

2. CHECK VACUUM CIRCUIT CONTINUITY IN VSV BY BLOWING AIR INTO PIPES

(a) Connect the VSV terminals to the battery terminals as illustrated.

(b) Blow into pipe ”A” and check that air comes out of pipe ”B” but does not come out of filter ”C”.

(c) Disconnect the battery

(d) Blow into pipe ”A” and check that air– comes out of pipe ”C” but does not come out of pipe ”B”.

If a problem is found, replace the VSV.

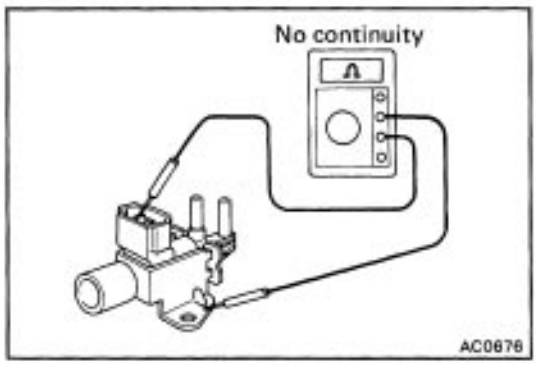

3. CHECK FOR SHORT CIRCUIT

Using an ohmmeter, check that there is no continuity between each terminal and the VSV body.

If a short circuit is found, repair or replace the VSV.

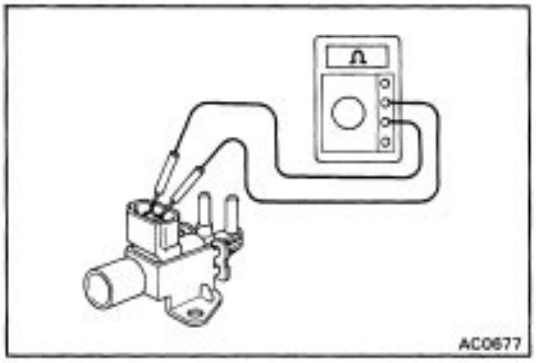

4. CHECK FOR OPEN CIRCUIT

Using an ohmmeter, measure the resistance between the two terminals.

Resistance: 37 – 44 Ω at 20˚C (685˚F)

If resistance value is not as specified, replace the VSV.

AUTOMATIC TRANSAXLE (A131L A240L A241H)

DESCRIPTION

A131L, A240L (For 4–door Sedan, 2–door Coupe and 5–door Wagon)

The A131L and A240L automatic transaxle described in this AT section is a lock–up three–speed or four speed automatic transaxle developed exclusively for use with a transversely–mounted engine.

A131L

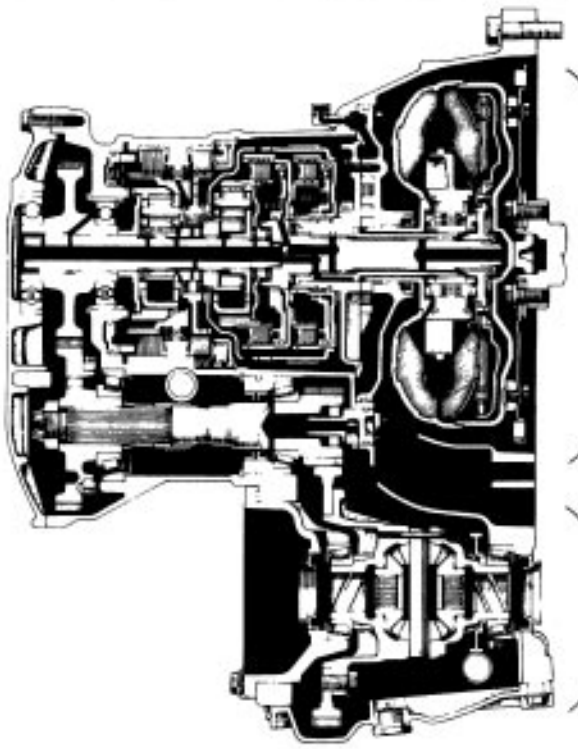

A240L

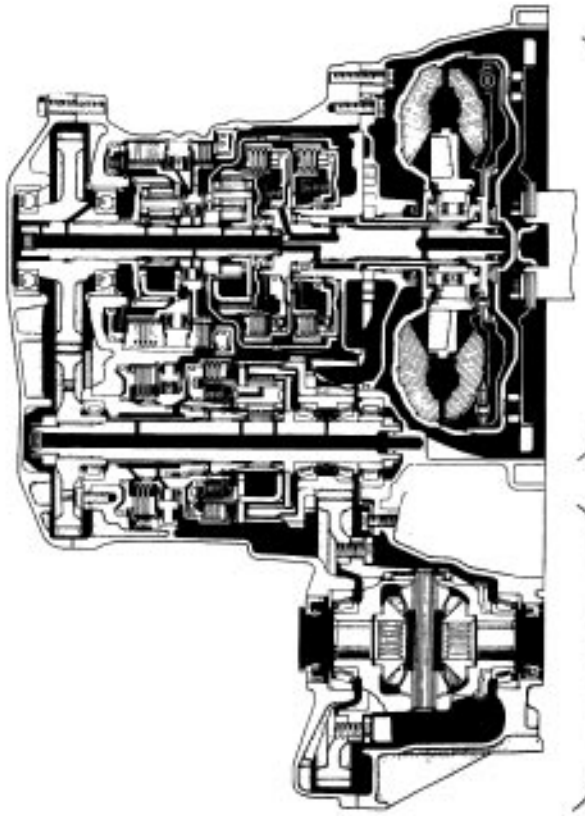

AT4117
AT4118

A241H (For All–Trac 4WD Station Wagon)

The A241H automatic transaxle is a 4–speed automatic transaxle developed for full–time 4WD use. Its construction is that of the favorably received A240L automatic transaxle mounted in the front wheel drive Corolla, combined with a transfer equipped with a center differential. In addition, a center deferential control clutch, which operates in response to driving conditions, has been incorporated.

The center differential control clutch controls excessive differences in the rotation rates of the front and rear wheels to provide the most suitable driving conditions.

NOTICE: Special handling methods are necessary for full–time 4WD vehicles during inspection and maintenance. Instructions concerning these handling methods are given on page IN–8.

A241H

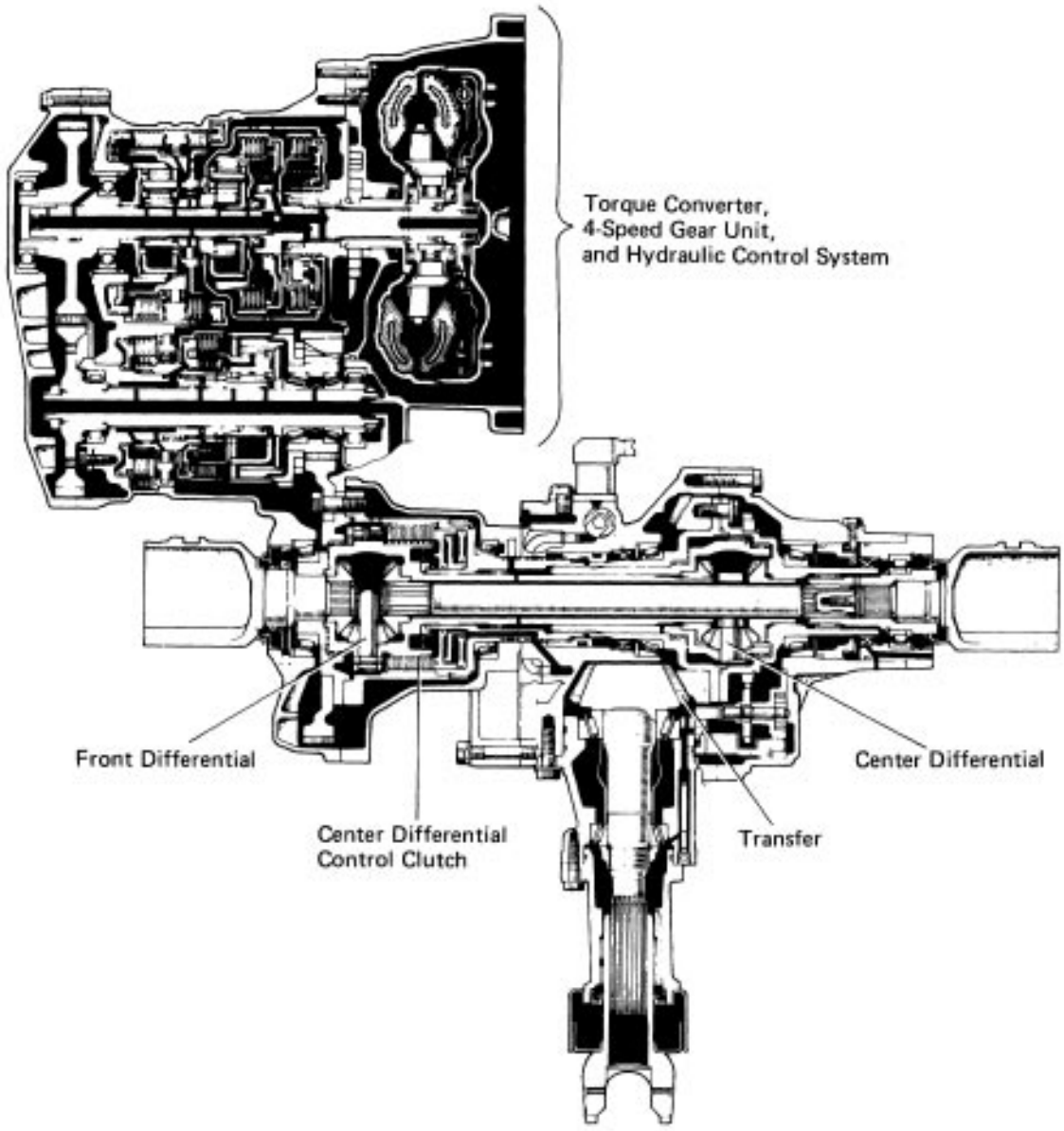

Torque Converter Planetary Gear Unit and Hydraulic Control System

TORQUE CONVERTER

Construction

The torque converter is composed of the pump impeller which is rotated by the engine, the turbine runner and lock–up clutch which are fixed to the transmission input shaft, and the stator which is attached to the stator shaft via the one–way clutch. The torque converter is filled with ATF.

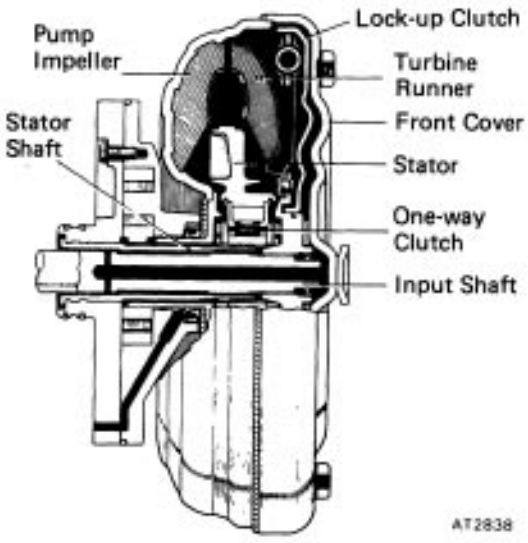

Operation

The pump impeller is rotated by the engine, which causes a flow in the ATF inside the torque converter.
The flow of ATF caused by the pump impeller strikes the turbine runner, providing a force to rotate the turbine runner, and transmits torque to .the input shaft.
The flow of ATF which has hit the turbine runner rebounds and tries to flow in the direction opposite to the direction of rotation of the pump impeller, but the stator returns the flow to the original direction of rotation. So the ATF becomes a force which supports the pump impeller and increases torque.
HINT: Although the stator is immobilized by the one–way clutch, should the one–way clutch become defective the stator will be rotated by the flow of ATF, the flow of ATF will not be reversed, torque will not be increased and the problem of inadequate acceleration will occur.

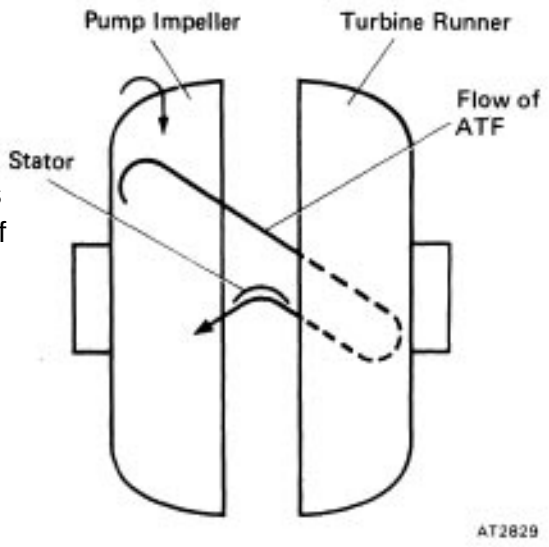

The lock–up clutch is pushed against the front cover by fluid pressure so that the engine revolutions are directly transmitted to the input shaft without the medium of the ATF.

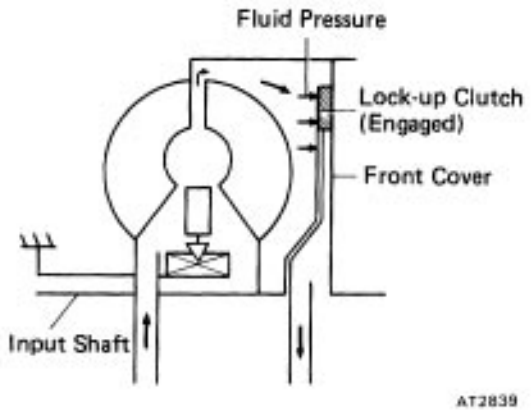

PLANETARY GEAR UNIT

Construction

The planetary gear unit is composed of planetary gears, clutches which transmit power to the planetary gears, and brakes and one–way clutches which immobilize the planetary carrier and planetary sungear.

Number of unit:

	One–way Clutch	Planetary Gear	Clutch	Brake
A131L	2	2	2	3
A240L, A241H	3	3	3	4

Operation

Power from the engine transmitted to the input shaft via the torque converter is then transmitted to the planetary gears by the operation of the clutch.

By operation of the brake and one–way clutch, either the planetary or the planetary sun gear are immobilized, altering the speed of revolution of the planetary gear– unit.

Shift change is carried out by altering the combination of clutch and brake operation.

Each clutch and brake operates by hydraulic pressure; gear position is decided according to the throttle opening angle and vehicle speed, and shift change automatically occurs.

The conditions of operation for each gear position are shown on the following illustrations:

A1311

D or 2 Range 1st Gear

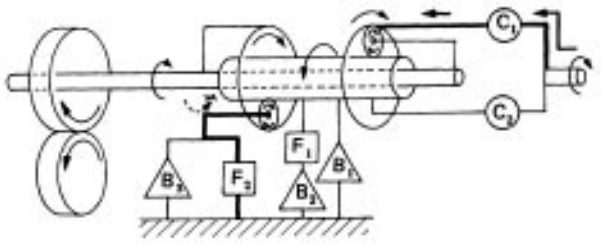

AT2830

2 Range 2nd Gear

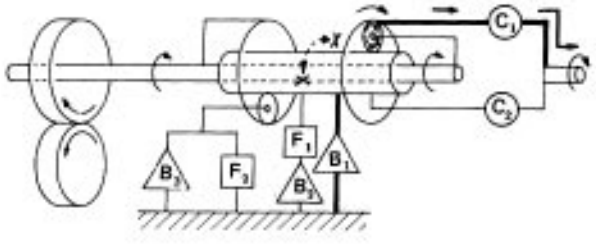

AT2833

D Range 2nd Gear

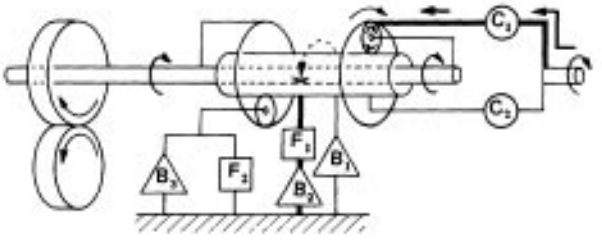

AT2831

L Range 1st Gear

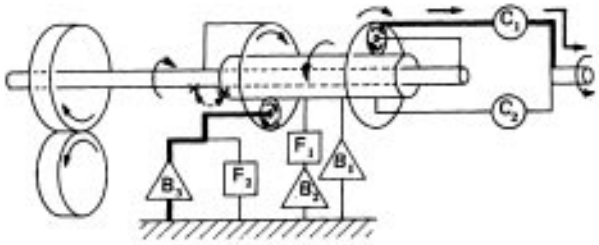

AT2834

D Range 3rd Gear

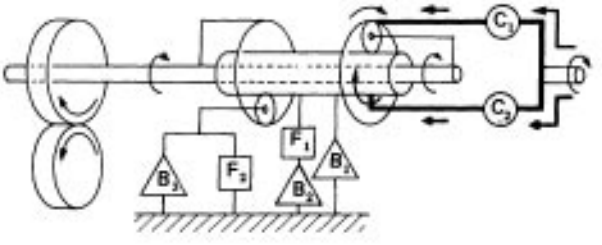

AT2832

R Range Reverse Gear

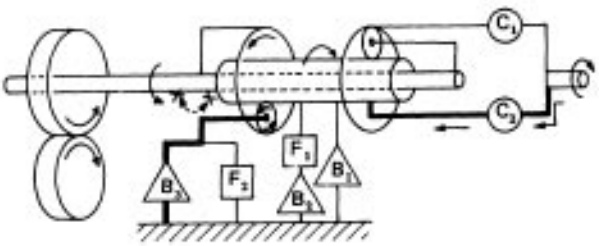

AT2835

A240L, A241H

D or 2 Range 1st Gear

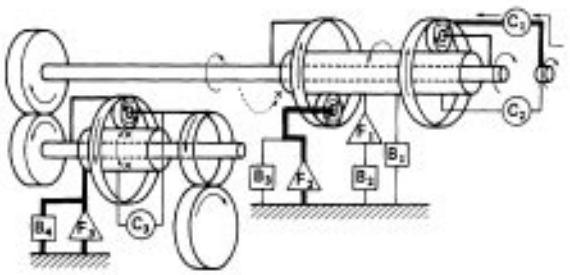

AT3216

2 Range 2nd Gear

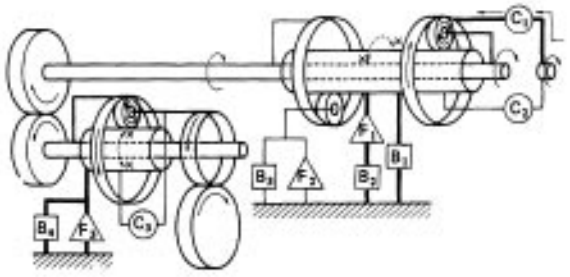

AT3220

D Range 2nd Gear

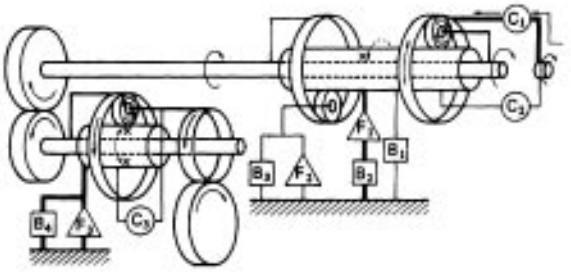

AT3217

L Range 1st Gear

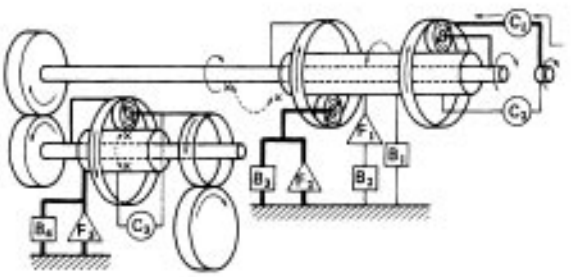

AT3221

D Range 3rd Gear

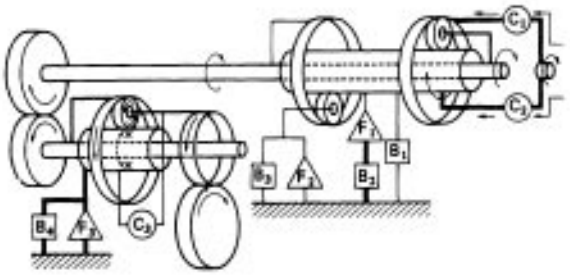

AT3218

R Range Reverse Gear

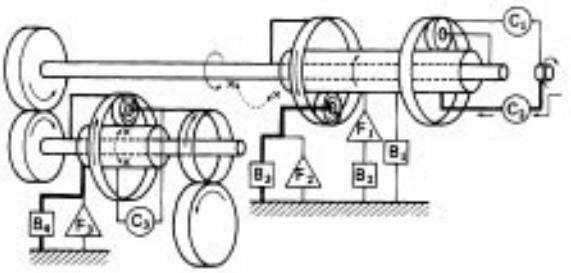

AT3222

D Range O/D

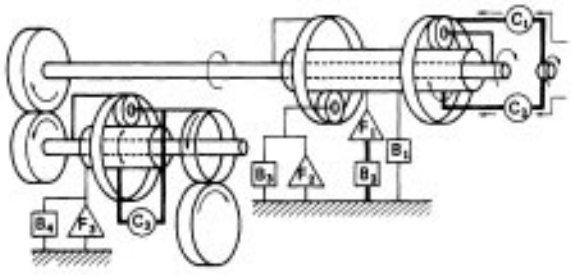

AT3219

HYDRAULIC CONTROL SYSTEM

Construction

The hydraulic control is composed of an oil pump, rotated by the engine, which supplies hydraulic pressure; a valve body which controls the hydraulic pressure and the opening and closing of the fluid passages; and a governor valve which supplies hydraulic pressure in accordance with vehicle speed.

Operation

Hydraulic pressure supplied by the oil pump is controlled by the regulator valve; the resulting oil pressure controlled by the regulator valve is called the line pressure.

Line pressure produces the hydraulic pressure for throttle pressure and governor pressure. Also, line pressure produces hydraulic pressure for the operation of each brake and clutch in the planetary gear unit.

The throttle valve acts to produce hydraulic pressure, called the throttle pressure, which responds to accelerator pedal modulation. Throttle pressure increases as the accelerator pedal is depressed.

The governor valve produces hydraulic pressure, called the governor pressure, in response to vehicle speed. Governor pressure increases as vehicle speed increases.

When shift change occurs, in accordance with the difference between throttle pressure and governor pressure, each shift valve shifts, the fluid passages to the clutches and brakes in the planetary gear unit are opened and the clutches and brakes operate.

The operation of the hydraulic control system, using the 2–3 shift valve of A131L as an example, is shown below:

[Low Speed] Gear Position: 2nd

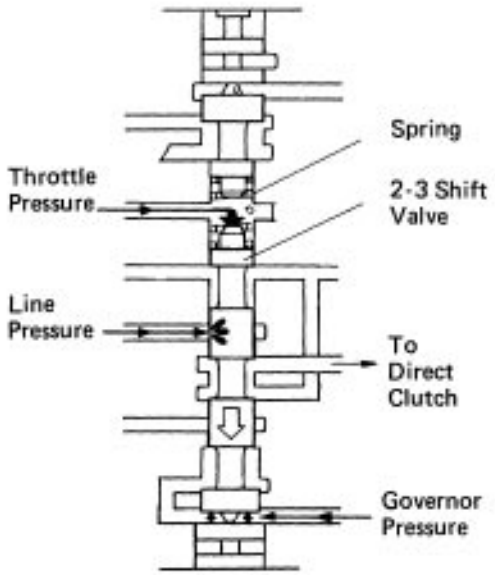

AT2836

Governor pressure is low.
2–3 shift valve is forced downward by throttle pressure and spring tension.
The line pressure fluid passage is closed.

[High Speed] Gear Position: 3rd

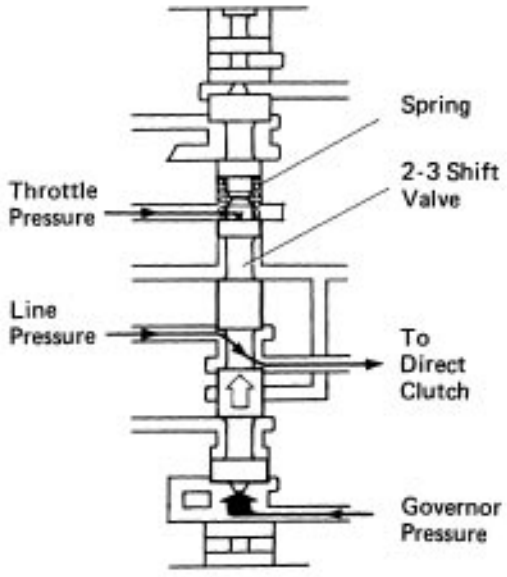

AT2837

When vehicle speed increases the governor pressure increases and overcomes throttle pressure and spring tension; 2–3 shift valve is forced upward. The line pressure fluid passage opens, the direct clutch is operated and the gear is shifted up to third.

Differential and Transfer (A241H)

FRONT DIFFERENTIAL

The front differential is incorporated in the ring gear mounting case. The right edge of the front differential case is integrated with center differential left side gear. The center differential control clutch is joined to the outside of the front differential case.

Front Differential

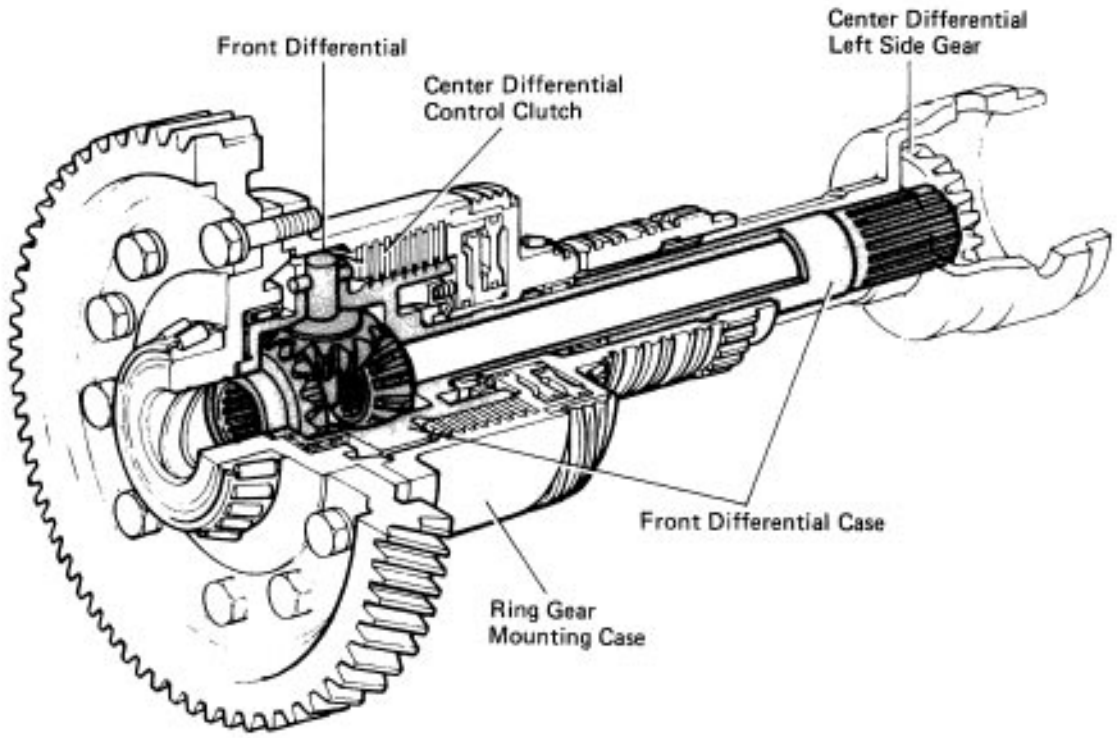

CENTER DIFFERENTIAL

The center differential has the following functions:

- Power from the transmission is delivered equally to the front wheel drive shafts and the rear wheel drive shafts.
- The rotation rate difference of the drive shafts of the front and rear wheels during turning is absorbed.
  Operation of the center differential eliminates the tight corner breaking phenomenon which occurred with part–time 4WD and makes possible full–time 4WD operation.

Center Differential

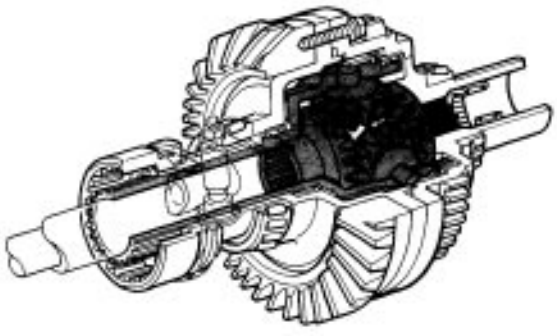

TRANSFER

The right case, which is integrated with the center differential right side gear, rotates and power is transmitted to the driven gear via the transfer ring gear after the direction of power transmission is changed by 90˚.

Transfer

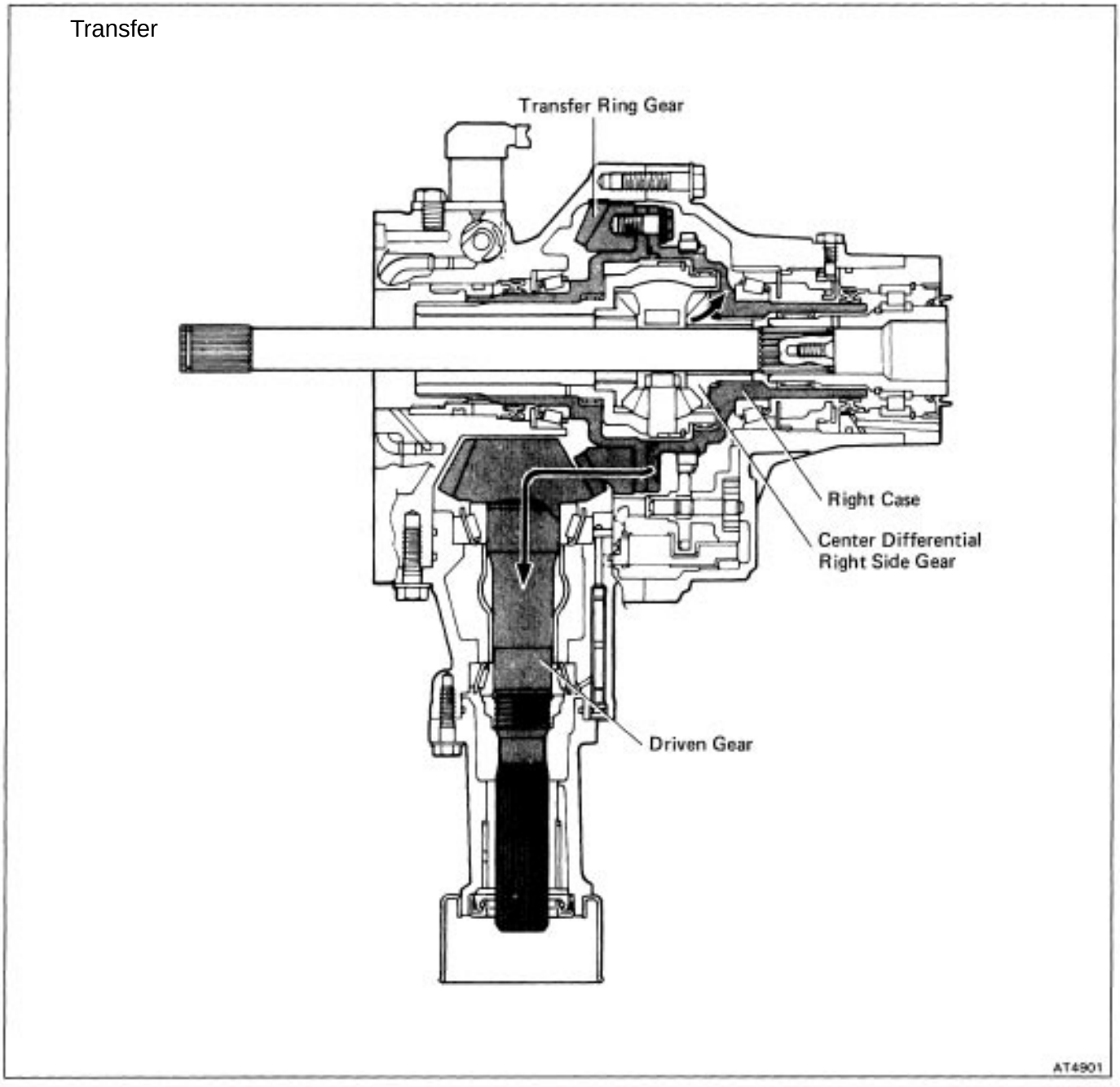

CENTER DIFFERENTIAL CONTROL CLUTCH

- The center differential control clutch operates the piston by hydraulic pressure so that the clutch plates and clutch discs are pressed together. The friction resistance thus created transmits the torque and operation of the center differential is controlled.
- Because the clutch plates and clutch discs are interlocked with the spline of the ring gear mounting case and front differential case repetitively, both cases try to rotate as a unit in response to the friction force from the contact of the clutch plates and discs. In the way, operation of the center differential is restrained and the power to control the difference between the rotation of the front and rear shafts produced.
- The hydraulic pressure operating on the piston is adjusted according to the throttle valve opening angle and the shift position.

Center Differential Control Clutch

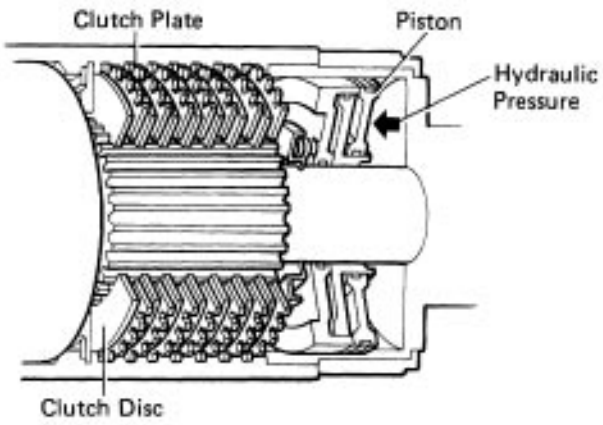

Hydraulic Pressure Control System

The hydraulic pressure operating on the center differential control clutch is adjusted by the No. 2 pressure regulator valve to a pressure corresponding to the throttle valve opening angle and the shift position. By operating the solenoid valve the clutch control valve opens and closes the fluid passages to the piston, and regulates the operation or non–operation of the center differential control clutch.

Hydraulic Pressure Control System

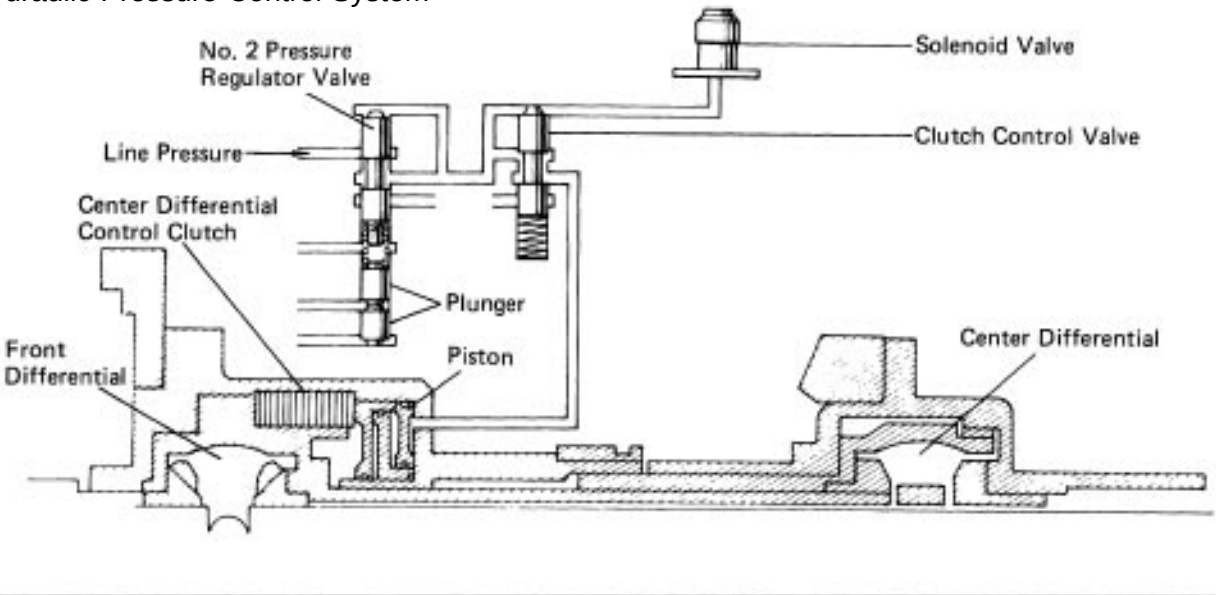

CLUTCH CONTROL VALVE AND SOLENOID VALVE

The clutch control valve is a valve which decides if the center differential control clutch will be operated or not operated.

- When the solenoid valve is ON, the hydraulic pressure acting on the upper part of the clutch valve is drained, the clutch control valve is moved by spring tension, the fluid passage to the center differential control clutch opens and the control clutch operates.
- When the solenoid valve is OFF, hydraulic pressure acts on the upper part of clutch control valve, the valve is moved by the hydraulic pressure and the fluid passage to the control clutch closes.

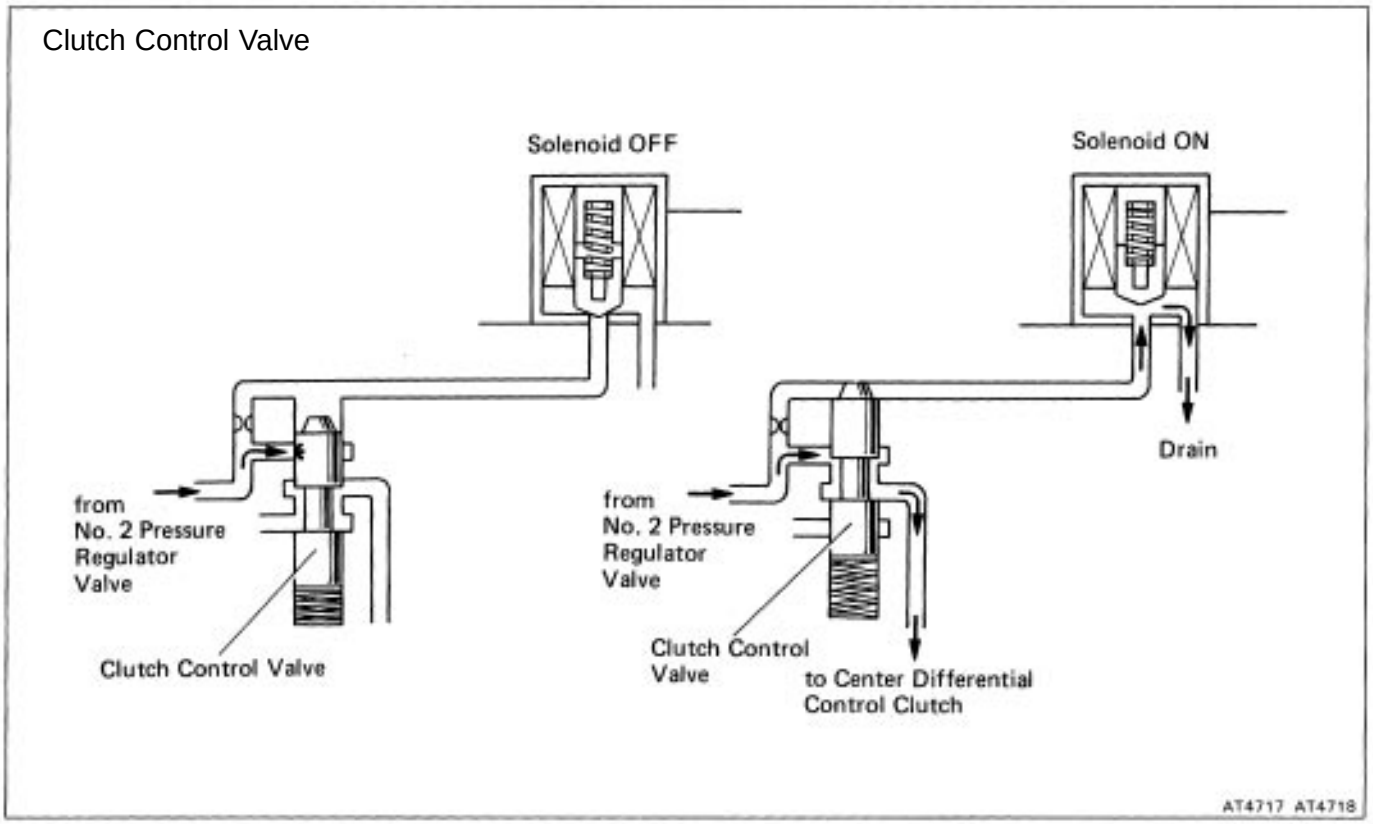

NO. 2 PRESSURE REGULATOR VALVE

This adjusts the hydraulic pressure operating on the center differential control clutch according to the throttle opening angle and shift position in order to provide clutch operation pressure suited to the driving conditions.

- Operation in D, 2 range. D or 2 Range
  Throttle modulator pressure acts on the lower part of the No. 2 pressure regulator valve and the line pressure is adjusted to a pressure corresponding to the throttle valve opening angle.
  Accordingly, the center differential control clutch operates at a pressure corresponding to the throttle valve opening angle.

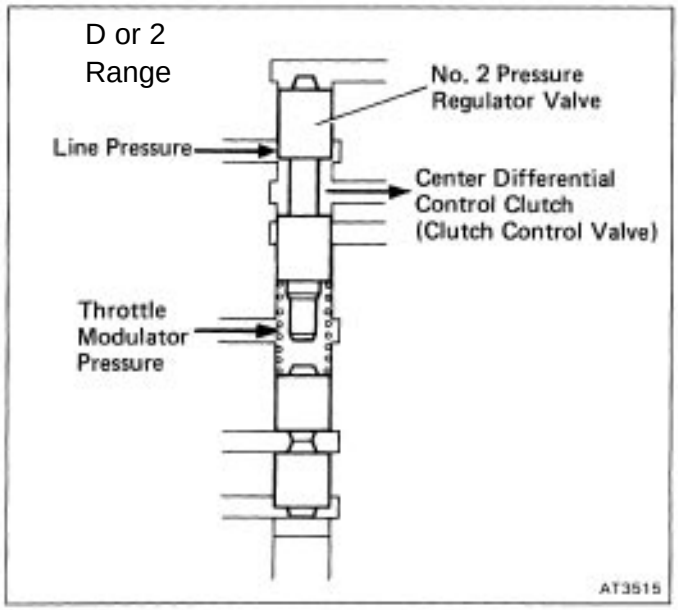

- Operation in L range.
  When the shift lever is shifted into L range, the line pressure acts between plungers (A) and (B), and plunger (A) and No. 2 pressure regulator valve are pushed up. Thus pressure adjustment does not occur at No. 2 pressure regulator valve and the line pressure acts directly on the center differential clutch to provide strong operation pressure.

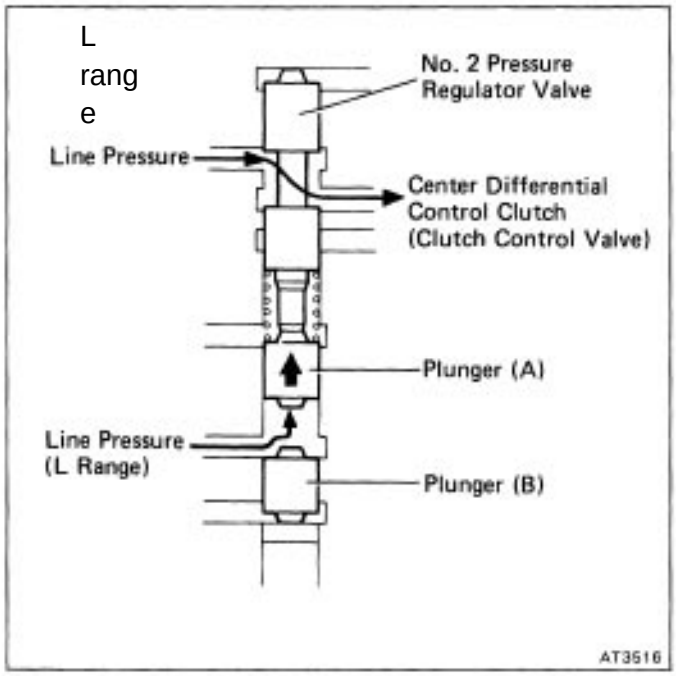

- Operation in R range
  When the shift lever is shifted into R range, the line pressure acts on the lower part of plunger (B); plunger (A) and (B) and No. 2 pressure regulator valve are pushed up. Thus pressure adjustment does not occur at No. 2 pressure regulator valve and the line pressure acts directly on the center differential clutch to provide strong operation pressure.

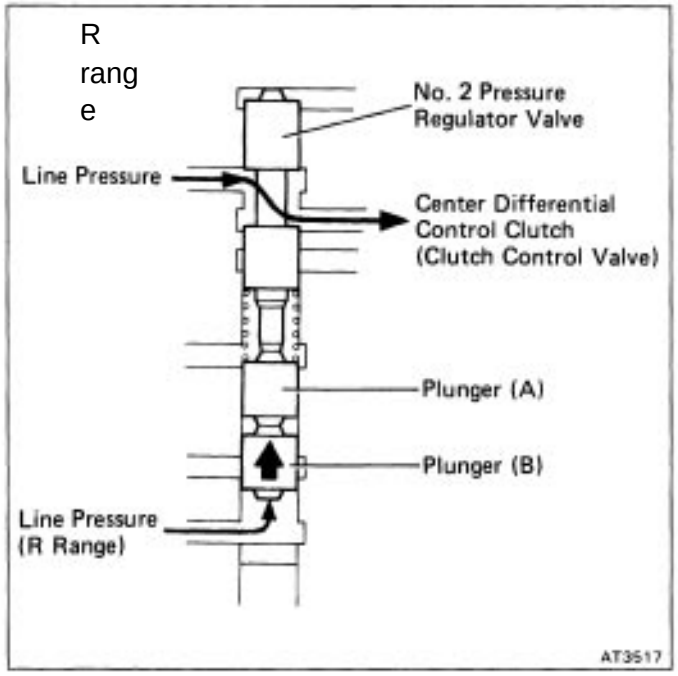

POWER TRAIN

- Power from the transmission is transmitted from the ring gear to the center differential. Also, because the pinion shaft is connected to the inside of the center differential, the power is transmitted from the pinion shaft to the pinion gear and then to the side gear on both sides.
- Power transmitted to the left side gear of the center differential is then transmitted to the front differential case and further transmitted from the pinion shaft –) pinion gear – both side gears. The drive shaft is interlocked with the side gear so power is transmitted from the drive shaft to the front wheels.
- Power transmitted to the right side gear of the center differential is transmitted from the transfer drive gear to the transfer driven gear, changes direction and is then transmitted from the propeller shaft to the rear differential.
- On the other hand, when hydraulic pressure acts on the center differential control clutch, power is also transmitted from the ring gear mounting case to the front differential case.

When the center differential control clutch is not operating

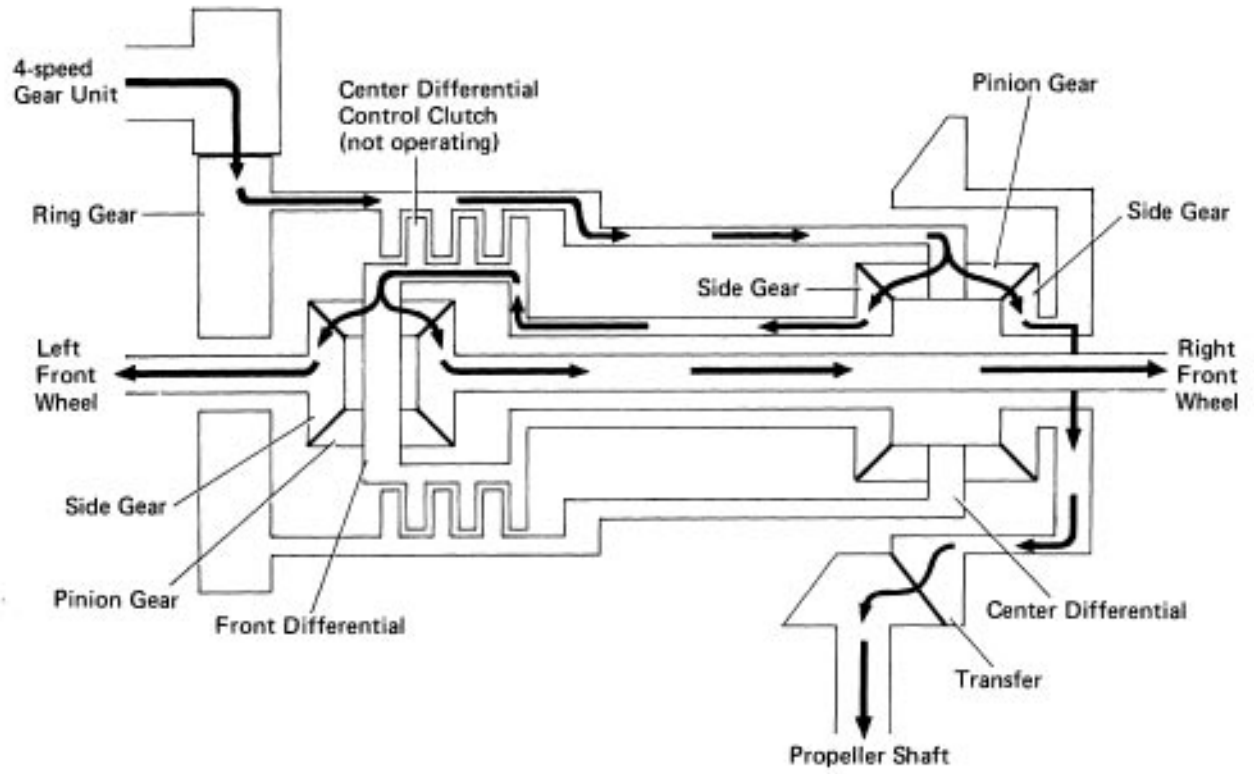

AT3518

When the center differential control clutch is operating

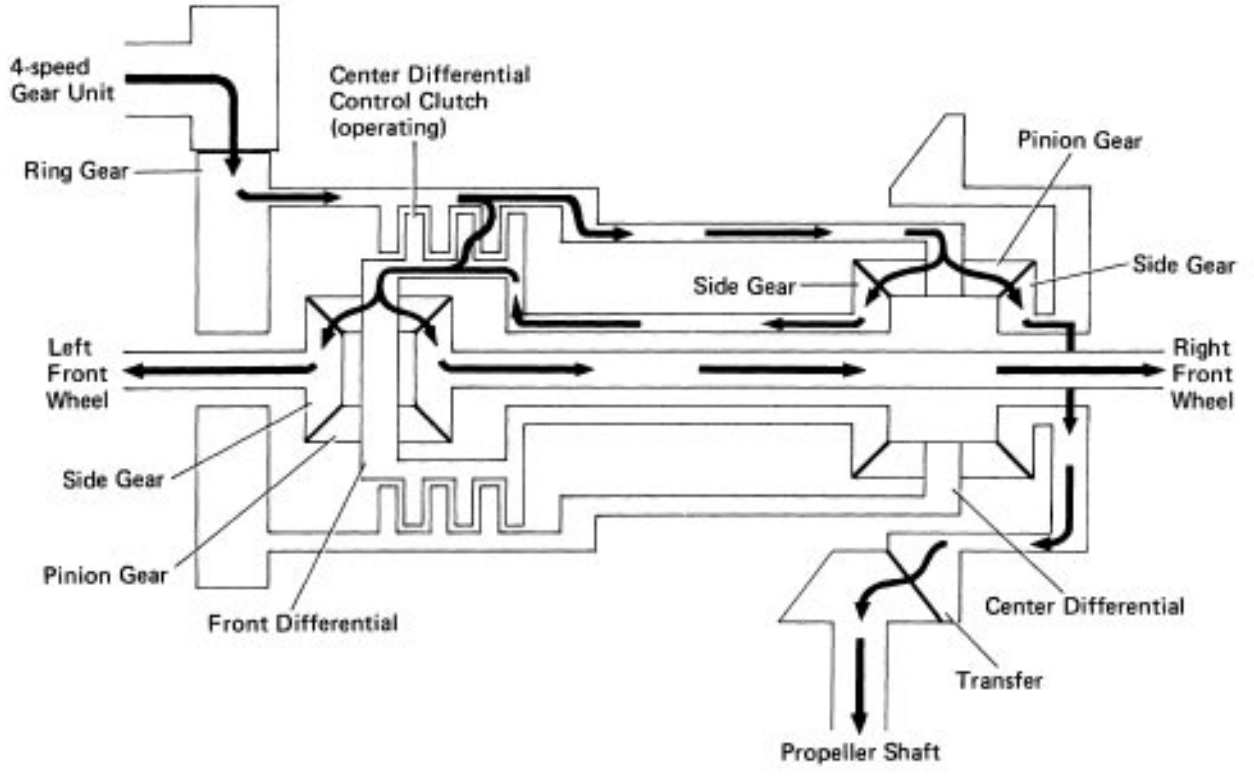

AT3522

Overdrive Cut System (A240L)

In addition to a function which cuts the overdrive when the water temperature is low, the A240L automatic transaxle also has a new function which cuts the overdrive when the throttle valve opening angle reaches 70% or more during overdrive operation.

The overdrive cut system is controlled by the Engine ECU.

CONSTRUCTION

The overdrive cut system can be broadly divided into three sections, the sensors, the ECU and the actuator.

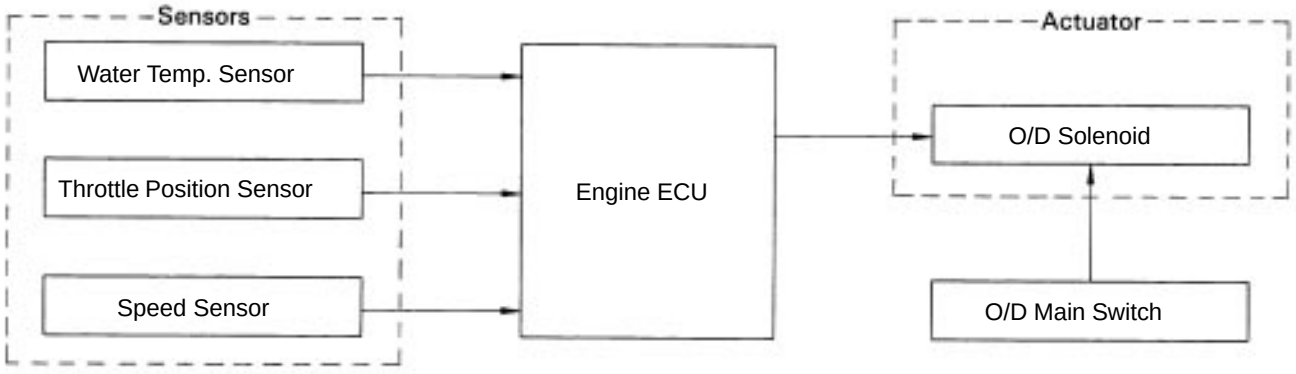

OPERATION

1. O/D Main Switch in ON Position

When the water temperature is 55˚C (131 ˚F) or below, the O/D solenoid is turned ON and the overdrive is cut.

If the water temperature is 55˚C (131 ˚F) or more and the following conditions are both fulfilled, the O/D solenoid is turned ON and the overdrive is cut:

- Vehicle speed (_125 km/h (78 mph)
- Throttle valve opening angle is 70% or more.

2. O/D Main Switch in OFF Position

The O/D solenoid remains ON and the overdrive is cut.

TROUBLESHOOTING

General Notes

. Troubles occurring with the automatic transmission can be caused by either the engine or the transmission itself. These two areas should be distinctly isolated before proceeding with trouble-shooting.

. Troubleshooting should begin with the simplest operation, working up in order of difficulty, but first determine whether the trouble lies within the engine or transmission.

. Proceed with the inspection as follows:

PRELIMINARY CHECK (See page AT–18)

(a) Check the tire inflation.
(b) Check the idle speed.
(c) Check the fluid level and fluid condition.
(d) Check the throttle cable mark.
(e) Check the shift linkage.
(f) Check the neutral start switch.

↓

STALL TEST (See page AT–22)

Check the engine and torque converter.

↓

TIME LAG TEST (See page AT–23)

Check the automatic transmission (each clutch, brake and gear) for wear.

↓

HYDRAULIC TEST (See page AT–24)

Measure the line pressure and make basic check of fluid circuit.

↓

ROAD TEST (See page AT–27)

Confirm if trouble lies within automatic transmission. If noisy or vibrating, the possible cause could be with the compressor, engine, drive shaft, tires, etc.

General Troubleshooting

Problem	Possible cause	Remedy	Page		
			A131L	A240L	A241H
Fluid discolored or smells burnt	Fluid contaminated	Replace fluid	AT–19	←	AT–44
	Torque converter faulty	Replace torque converter	AT–43	←	
	Transmission faulty	Disassemble and inspect transmission	AT–47	AT–64	AT–90
Vehicle does not move in any forward range or reverse	Shift cable out of adjustment	Adjust shift cable	AT–20	AT–171	AT–182
	Valve body or primary regulator faulty	Inspect valve body	AT–160		
	Parking lock pawl faulty	Inspect parking lock pawl	AT–62	AT–86	AT–113
	Torque converter faulty	Replace torque converter	AT–43	←	AT–44
	Oil pump intake screen blocked	Clean oil strainer screen	AT–51	AT–69	AT–96
	Transmission faulty	Disassemble and inspect transmission	AT–47	AT–64	AT–90
Shift lever position incorrect	Shift cable out of adjustment	Adjust shift cable	AT–20	AT–171	AT–182
	Manual valve and lever faulty	Inspect valve body	AT–160	AT–64	AT–90
	Transmission faulty	Disassemble and inspect transmission	AT–47		
Harsh engagement into any drive range	Throttle cable out of adjustment	Adjust throttle cable	AT–20		AT–182
	Valve body or primary regulator faulty	Inspect valve body	AT–160	AT–171	
	Transmission faulty	Disassemble and inspect transmission	AT–47	AT–64	AT–90
Delayed 1–2, 2–3 or 3–OD up–shift, or down–shifts from OD–3 or 3–2 and shifts back to OD or 3	Throttle cable out of adjustment	Adjust throttle cable	AT–20	AT–171	AT–182
	Valve body faulty	Inspect valve body	AT–160	AT–36	
	Solenoid valve faulty	Inspect solenoid valve			
	Governor faulty	Inspect governor	AT–51	AT–68	AT–94
Slips on 1–2, 2–3 or 3–OD up–shift, or slips or shudders on acceleration	Shift cable out of adjustment	Adjust shift cable	AT–20	←	AT–182
	Throttle cable out of adjustment	Adjust throttle cable	AT–20	AT–171	
	Valve body faulty	Inspect valve body	AT–160	AT–36	
	Solenoid valve faulty	Inspect solenoid valve			
	Transmission faulty	Disassemble and inspect transmission	AT–47	AT–64	AT–90
Vehicle does not hold in P range	Control cable out of adjustment	Adjust shift cable	AT–20	AT–86	AT–113
	Parking lock pawl cam and spring faulty	Inspect cam and spring	AT–62		
Drag, binding or tieup on 1–2, 2–3 or 3–OD up–shift	Control cable out of adjustment	Adjust shift cable	AT–20	AT–171	←
	Valve body faulty	Inspect valve body	AT–160	AT–64	AT–182
	Transmission faulty	Disassemble and inspect transmission	AT–47		AT–90

General Troubleshooting (Cont'd)

Problem	Possible cause	Remedy	Page		
			A131L	A240L	A241H
No lock–up	Valve body faulty Torque converter faulty Transmission faulty	Inspect valve body Replace torque converter Disassemble and inspect transmission	AT–160 AT–43 AT–47	AT–171 AT–64	AT–182 AT–44 AT–90
Harsh down–shift	Throttle cable out of adjustment Valve body faulty Transmission faulty	Adjust throttle cable Inspect valve body Disassemble and inspect transmission	AT–20 AT–160 AT–47	AT–171 AT–64	AT–182 AT–90
No down–shift when coasting	Governor faulty Valve body faulty Solenoid valve faulty Electronic control faulty	Inspect governor Inspect valve body Inspect solenoid valve Inspect electronic control	AT–51 AT–160 –	AT–68 AT–171 AT–36 AT–32	AT–94 AT–18 2 ←
Down–shift occurs too quickly or too late while coasting	Throttle cable out of adjustment Governor faulty Valve body faulty Transmission faulty	Adjust throttle cable Inspect governor Inspect valve body Disassemble and inspect transmission	AT–20 AT–51 AT–160 AT–47	AT–68 AT–171 AT–64	AT–94 AT–182 AT–90
No OD–3, 3–2 or 2–1 kick–down	Throttle cable out of adjustment Governor faulty Valve body faulty	Adjust throttle cable Inspect governor Inspect valve body	AT–20 AT–51 AT–160	AT–68 AT–171	AT–94 AT–18 2
No engine braking in 2 or L range	Valve body faulty Transmission faulty	Inspect valve body Disassemble and inspect transmission	AT–160 AT–47	AT–171 AT–64	AT–182 AT–90
No center differential control	Electronic control faulty Valve body faulty Transfer faulty C/D Clutch faulty	Inspect electronic control Inspect valve body Disassemble and inspect transfer Disassemble and inspect C/D clutch	– – – –	– – – –	AT–32 AT–182 AT–235 AT–222

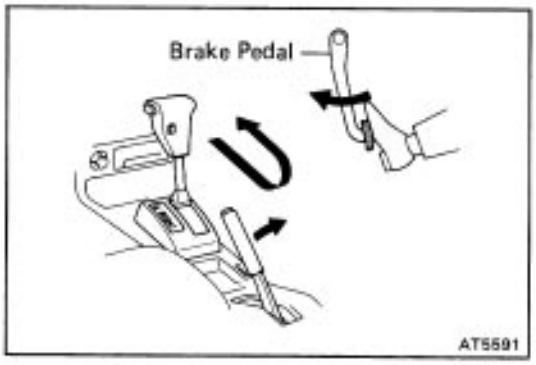

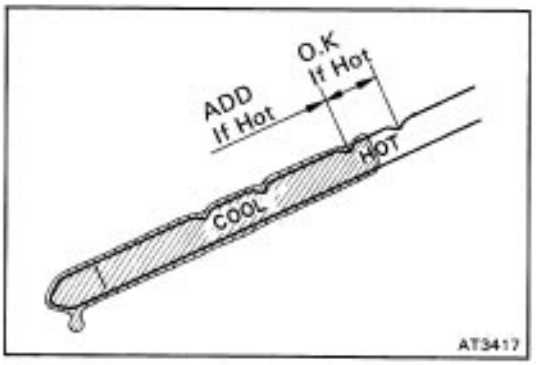

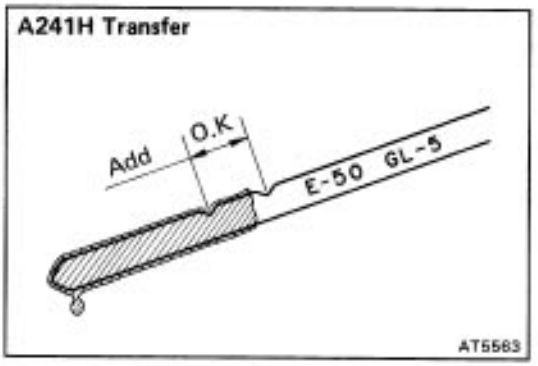

Preliminary Check

1. CHECK TRANSAXLE FLUID LEVEL

HINT: The vehicle must have been driven so that the engine and transaxle are at normal operating temperature. (fluid temperature: 70 – 80˚C or 158 – 176˚F)

(a) Park the vehicle on a level surface, set the parking brake.

(b) With the engine idling and the brake pedal depressed, shift the shift lever into each gear from P range to L range smoothly and return to P range.

(c) Pull out the transaxle dipstick and wipe it clean.

(d) Push it back fully into the tube.

(e) Pull it out and check that the fluid level is in the HOT range.

If low, add fluid.

Fluid type: (A131L, A240L) DEXRON¿ II
(A241H) ATF Type T (08886–00405) or equivalent

NOTICE: Do not overfill.

2. (A241H) CHECK TRANSFER OIL LEVEL

(a) Park the vehicle on a level surface, set the parking brake.

(b) Pull out the transaxle dipstick and wipe it clean.

(c) Push it back fully into the tube.

(d) Pull it out and check the oil level as shown in the illustration.

Oil type:

Transaxle oil E50 (08885–80206), API GL5, SAE75W–90 or equivalent

NOTICE: Do not overfill.

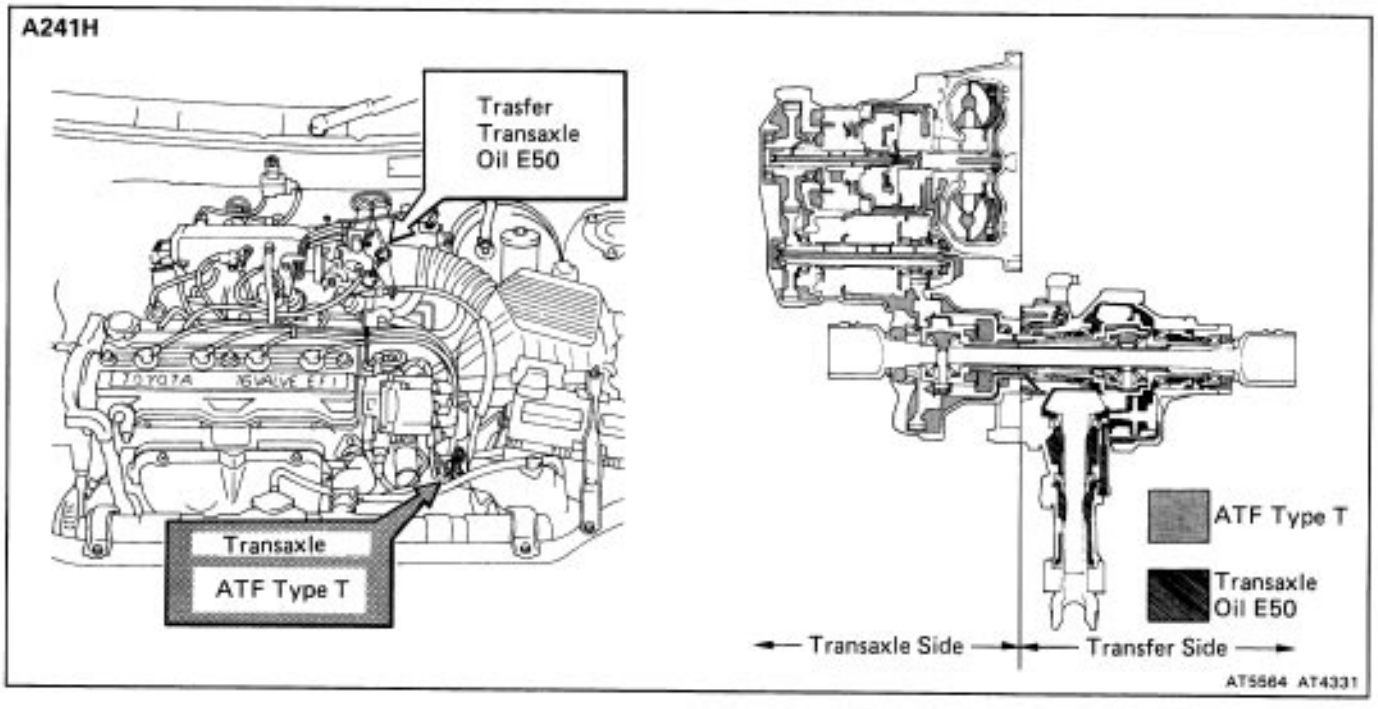

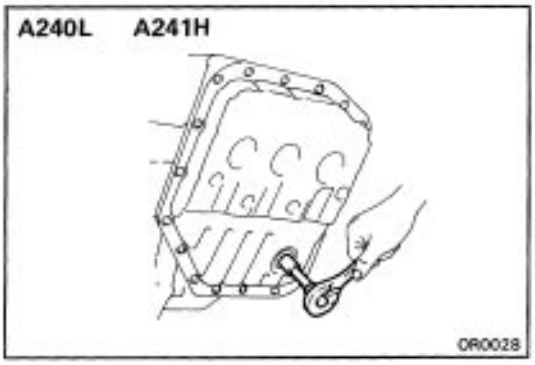

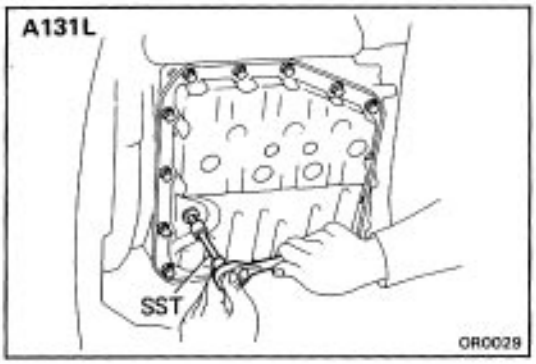

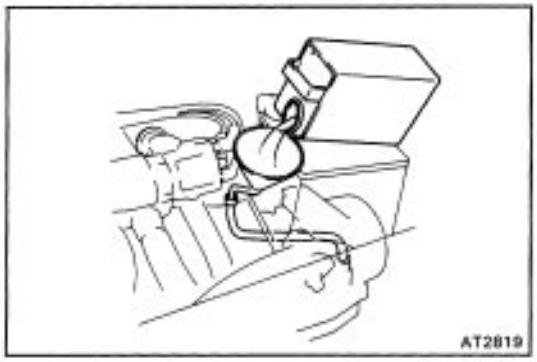

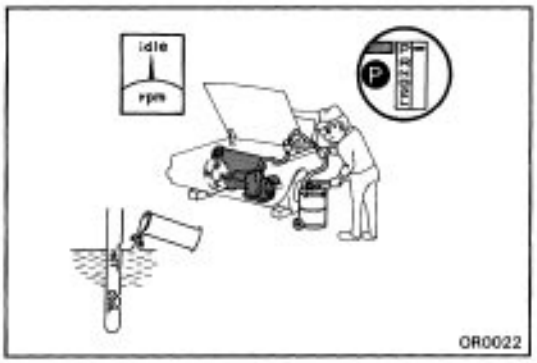

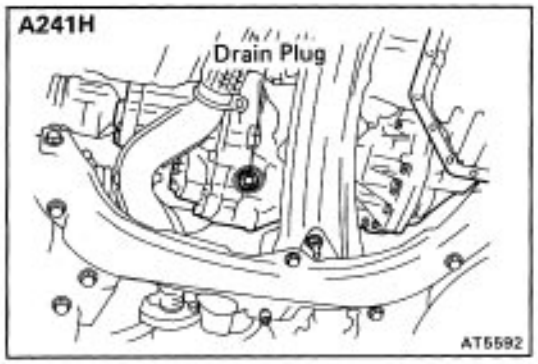

3. CHECK FLUID CONDITION

If the fluid smells burnt or black, replace it.

4. REPLACE TRANSAXLE FLUID

(a) (A240L, A241H)

Remove the drain plug and drain the fluid.

(A131L)

Using SST, remove the drain plug and drain the fluid.

SST 09043–38100

(b) (A240L, A241H)

Install the drain plug.

(A131L)

Using SST, install the drain plug securely.

SST 09043–38100

(e) Add new fluid through the filler tube.

Fluid type: (A131L, A240L) ATF DEXRON© II
(A241H) ATF Type T (08886–00405) or equivalent

Capacity:

A240L 7.2 liters (7.6 US qts, 6.3 Imp. qts)
A131L 5.5 liters (5.8 US qts, 4.8 Imp. qts)
A241H 8.2 liters (8.7 US qts, 7.2 Imp. qts)

Drain and refill:

A240L, A241H
3.1 liters (3.3 US qts, 2.7 Imp. qts)
A131L
2.5 liters (2.6 US qts, 2.2 Imp. qts)

(d) Start the engine and shift the selector– into all positions from P through L and then shift into P.

(e) With the engine idling, check the fluid level. Add fluid up to the COOL level on the dipstick.

(f) Check the fluid level with the normal fluid temperature (70 – 80˚C or 158 – 176˚F) and add as necessary.

NOTICE: Do not overfill.

5. (A241H)

REPLACE TRANSFER OIL

(a) Remove the drain plug and drain the oil.

(b) Install the drain plug.

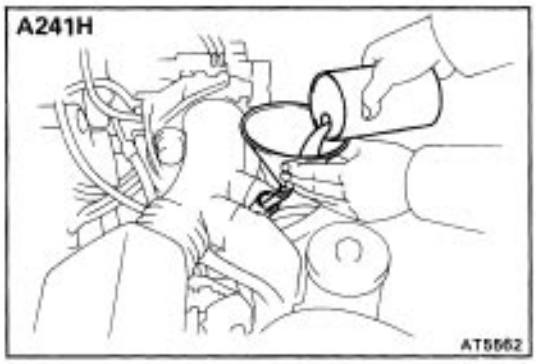

(c) Add new oil through the filler tube.

Oil type:

Transaxle oil E50 (08885–80206), API GI–5, SAE75W–90 or equivalent

Capacity: 0.8 liters (0.8 US qts, 0.7 Imp. qts)

Drain and refill: 0.7 liters (0.7 US qts, 0.6 Imp. qts)

(d) Check the oil level and add as necessary.

NOTICE: Do not overfill

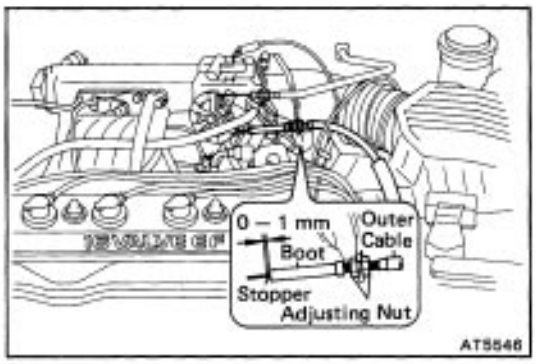

6. INSPECT AND ADJUST THROTTLE CABLE

(a) Depress the accelerator pedal all the way and check that the throttle valve opens fully.

HINT: If the valve does not open fully, adjust the accelerator cable.

(b) Fully depress the accelerator.

(c) Loosen the adjustment nuts.

(d) Adjust the outer cable so that the distance between the end of the boot and stopper on the cable is the standard.

Standard boot and cable stopper distance: 0 – 1 mm (0 – 0.04 in.)

(e) Tighten the adjusting nuts.

(f) Recheck the adjustments.

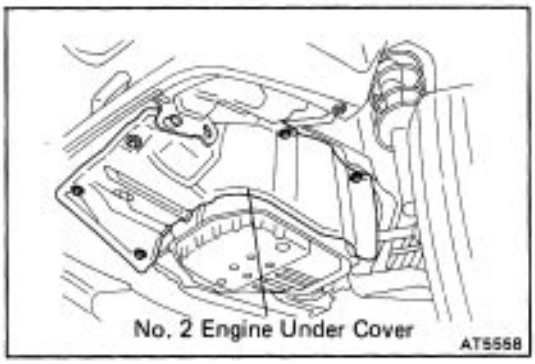

7. INSPECT AND ADJUST SHIFT CABLE

When shifting the shift lever from the N position to other positions, check that the lever can be shifted smoothly and accurately to each position and that the position indicator correctly indicates the position.

If the indicator is not aligned with the correct position, carry out the following adjustment procedures.

(a) Remove the No. 2 engine under cover.

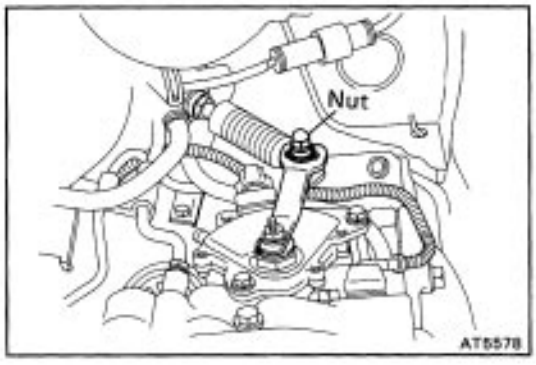

(b) Loosen the nut on manual shift lever.

(c) Push the manual lever fully toward the right side of the vehicle.

(d) Return the lever two notches to NEUTRAL position.

(e) Set the shift lever to N.

M While holding the lever lightly toward the R range side, tighten the nut.

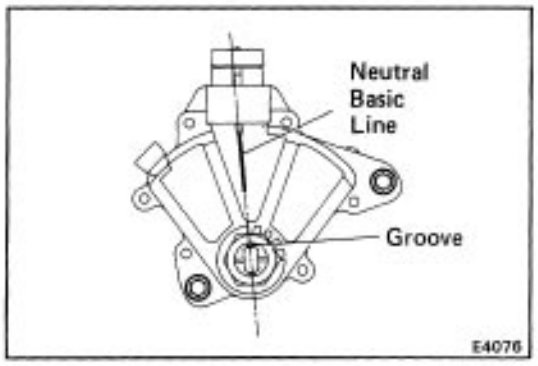

8. ADJUST NEUTRAL START SWITCH

If the engine will start with the shift selector in any range other than N or P range, adjustment is required.

(a) Loosen the neutral start switch bolts and set the shift selector to the N range.

(b) Align the groove and neutral basic line.

(c) Hold in position and tighten the bolts.

Torque: 55 kg–cm (48 in.–lb, 5.4 N–m)

9. INSPECT IDLE SPEED (N RANGE)

Idle speed: 650 – 750 rpm (A131L, A240L)
750 – 900 rpm (A241H)

Stall Test

The object of this test is to check the overall performance of the transmission and engine by measuring the maximum engine speeds in D and R ranges.

NOTICE:

(a) Perform the test at normal operating fluid temperature (50 – 80˚C or 122 – 176˚F).

(b) Do not continuously run this test longer than 5 seconds.

MEASURE STALL SPEED

(a) Chock the four wheels.

(b) Mount an engine tachometer.

(c) Fully apply the parking brake.

(d) Keep your left foot pressed firmly on the brake pedal.

(e) Start the engine.

(f) Shift into the D range. Step all the way down on the accelerator pedal with your right foot. Quickly read the highest engine rpm at this time.

Stall speed: A240L 2,700 ± 150 rpm, A131L ± A241H 2,350 ± 150 rpm

(g) Perform the same test in the R range.

EVALUATION

(a) If the engine speed is the same for both ranges but lower than specified valve:

- Engine output may be insufficient.
- Stator one–way clutch is not operating properly.

(b) If the stall speed at the D range is higher than specified:

- Line pressure too low.
- Forward clutch slipping.
- One–way clutch No. 2 not operating properly.
- U/D one–way clutch not operating properly. (A240L, A241H)

(c) If the stall speed at the R range is higher than specified:

- Line pressure too low.
- Direct clutch slipping.
- First and reverse brake slipping.
- U/D brake slipping. (A240L, A241H)

(d) If the stall speed in the R and D ranges is higher than specified:

- Line pressure too low.
- Improper fluid level.
- U/D brake slipping. (A240L, A241H)

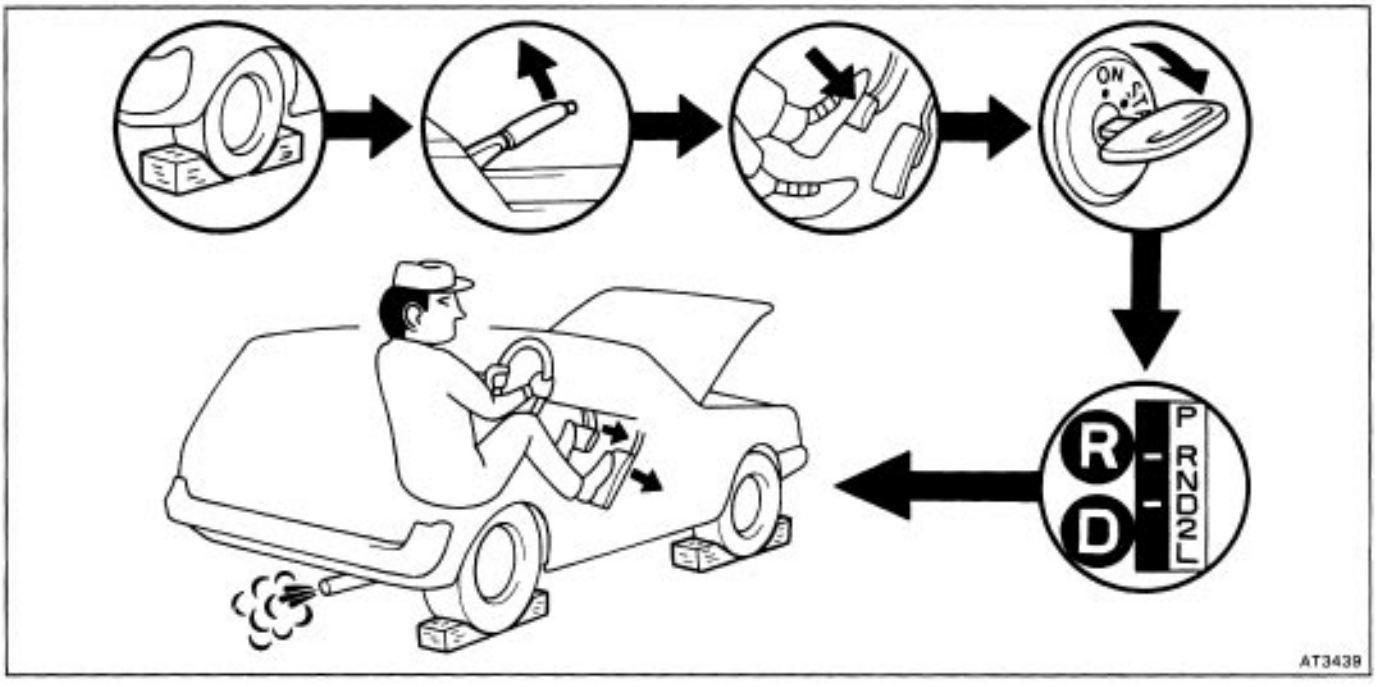

Time Lag Test

If the shift lever is shifted while the engine is idling, there will be a certain time lapse or lag before the shock can be felt. This is used for checking the condition of the forward clutch, direct clutch and first and reverse brake.

NOTICE:

(a) Perform the test at normal operating fluid temperature (50 – 80°C or 122 – 176°F).

(b) Be sure to allow a one minute interval between tests.

(c) Make three measurements and take the average value.

MEASURE TIME LAG

(a) Chock the four wheels.

(b) Fully apply the parking brake.

(c) Start the engine and check the idle speed.

Idling speed: 650 – 750 rpm (A131L, A240L), 750 – 900 rpm (A241H)

(d) Shift the shift lever from N to D range. Using a stop watch, measure the time it takes from shifting the lever until the shock is felt.

Time lag: Less than 1.2 seconds

(e) In same manner, measure the time lag for N to R range.

Time lag: Less than 1.5 seconds

EVALUATION

(a) If N–D time lag is longer than specified:

- Line pressure too low.
- Forward clutch worn.
- No. 2 and U/D one–way clutch not operating properly. (A240L, A241H)

(b) If N–R time lag is longer than specified:

- Line pressure too low.
- Direct clutch worn.
- First and reverse brake worn.
- U/D brake worn. (A240L, A241H)

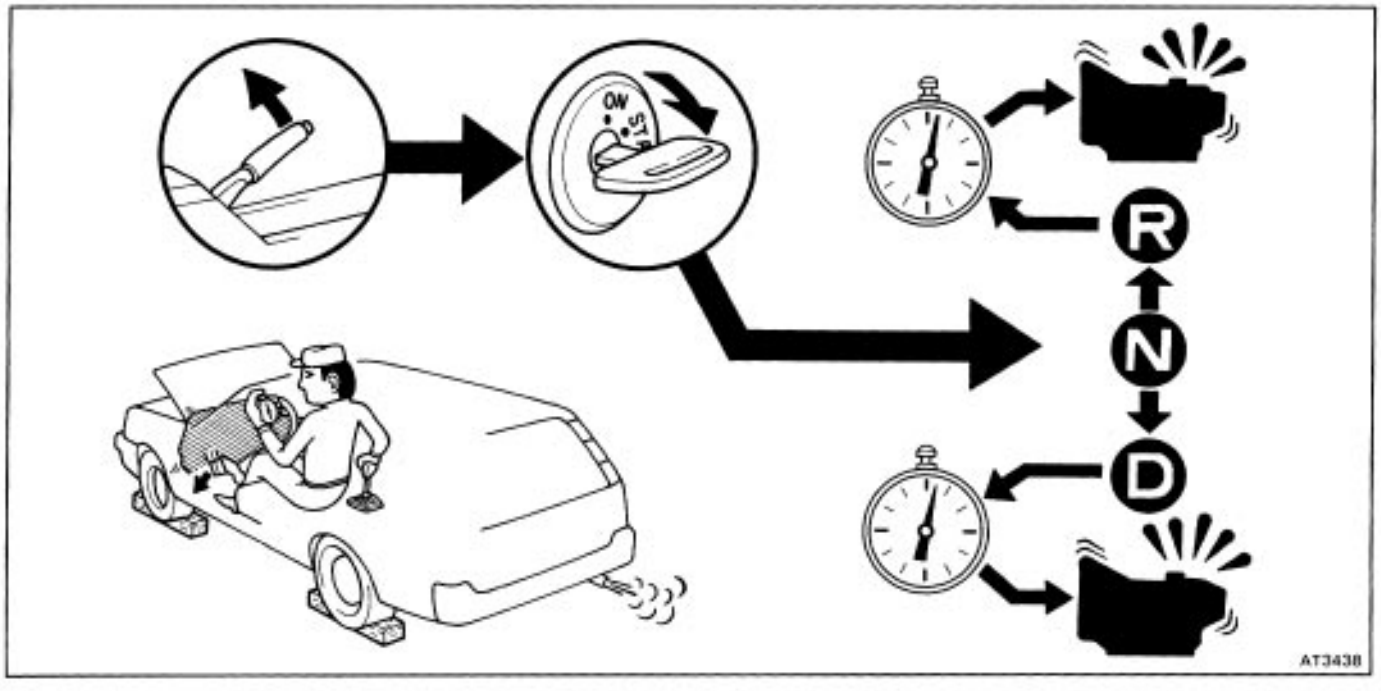

Hydraulic Test

1. MEASURE LINE PRESSURE

(a) warm up the transmission fluid.

(b) Remove the transmission case test plug and mount the oil pressure gauge (SST).
SST 09992–00094

NOTICE: Preform the test at normal operating fluid temperature (50 – 800C or 122 – 1760F).

(c) Fully apply the parking brake and chock the four wheels.

(d) Start the engine and check the idle speed.

(e) Shift into the D range, step down strongly on the brake pedal with your left foot and while manipulating the accelerator pedal with the right foot, measure the line pressure at the engine speeds specified in the table.

(f) In the same manner, perform the test in the R range.

kg/cm^2 (psi, kPa)

D range		R range	
Idling	Stall	Idling	Stall
3.7–4.3 (53–61, 363–422)	9.2–10.7 (131–152, 902–1,049)	5.4–7.2 (77–102, 530–706)	14.4–16.8 (205–239, 1,412–1,648)

(g) If the measured pressures are not up to specified values, recheck the throttle cable adjustment and retest.

EVALUATION

(a) If the measured values at all ranges are higher than specified:
- Throttle cable out of adjustment.
- Throttle valve defective.
- Regulator valve defective.

(b) If the measured values at all ranges are lower than specified:
- Throttle cable out of adjustment.
- Throttle valve defective.
- Regulator valve defective.
- Oil pump defective.
- U/D brake defective. (A240L, A241H)

(c) If pressure is low in the D range only:
- D range circuit fluid leakage.
- Forward clutch defective.

(d) If pressure is low in the R range only:
- R range circuit fluid leakage.
- First and reverse brake defective.
- Direct clutch defective. (A240L, 241 H)

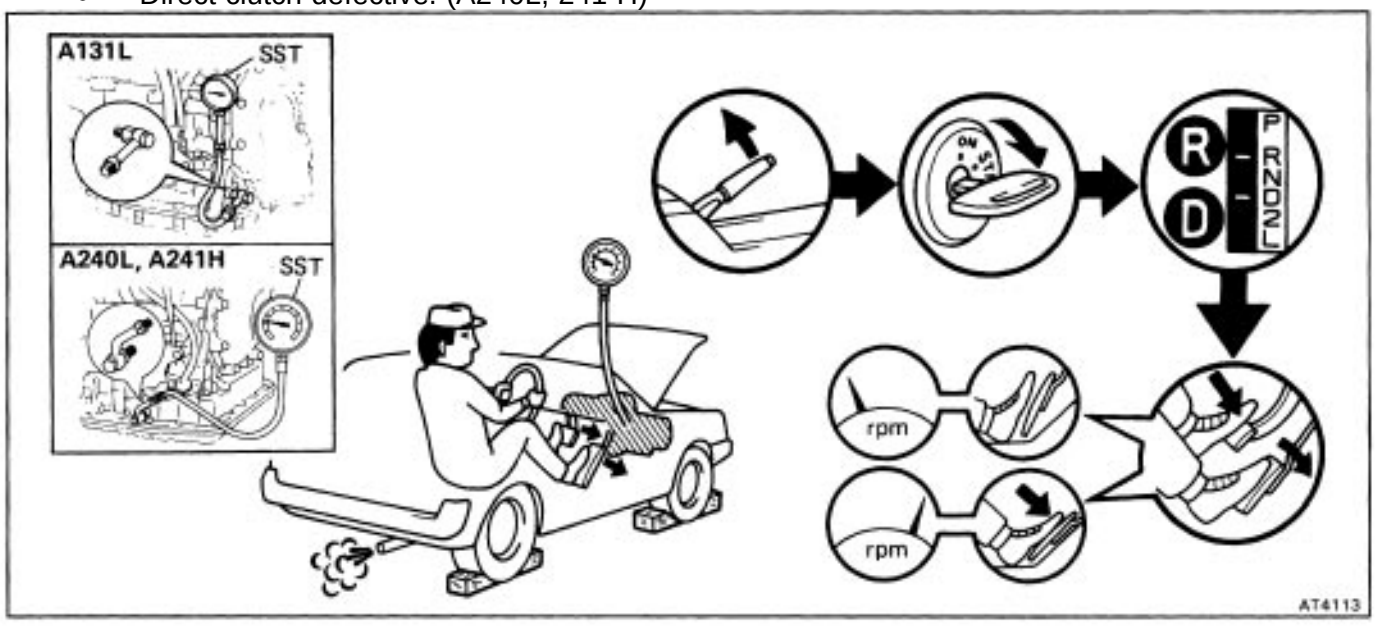

MEASURE GOVERNOR PRESSURE

(a) Warm up the transmission fluid. (50 – 80˚C or 122 – 176˚F)

(b) Jack–up the vehicle.

(c) (A241H) Shift the mode selector lever into the LOCK position.

CAUTION: (A241H) After finishing inspection, be sure to return the mode select lever to FREE position and attach the lock bolt (See page AT–350).

(d) Remove the transmission case test plug and mount the oil pressure gauge (SST).

SST 09992–00094

NOTICE: Perform the test at normal operating fluid temperature (50 – 80˚C or 122 – 176˚F).

(e) Check the parking brake to see that it is not applied.

(f) Start the engine.

(g) Shift into the D range and measure the governor pressures at the speeds specified in the table.

EVALUATION

If governor pressure is defective:

- Line pressure defective.
- Fluid leakage in governor pressure circuit.
- Governor valve operation defective.

Type	Drive pinion	Vehicle speed (Reference)	Governor pressure kg /cm2 (psi, kPa)
A131L	1,000 rpm	30 km/h (19 mph)	0.4 – 1.2 (5.7 – 17, 39 – 118)
	1,800 rpm	54 km/h (34 mph)	1.4 – 2.2 (20 – 31, 137 – 216)
	3,500 rpm	104 km/h (65 mph)	3.8 – 4.6 (54 – 65, 373 – 451)
A 240L	800 rpm	28 km/h (17 mph)	0.5 – 1.3 (7.1 – 18, 49 – 127)
A241H			0.9 – 1.7 (13 – 24, 88 – 167)
A 2 40L , A241H	1,600 rpm	57 km/h (35 mph)	1.8 – 2.6 (26 – 37, 177 – 255)
	2,400 rpm	85 km/h (53 mph)	3.3 – 4.1 (47 – 58, 324 – 402)

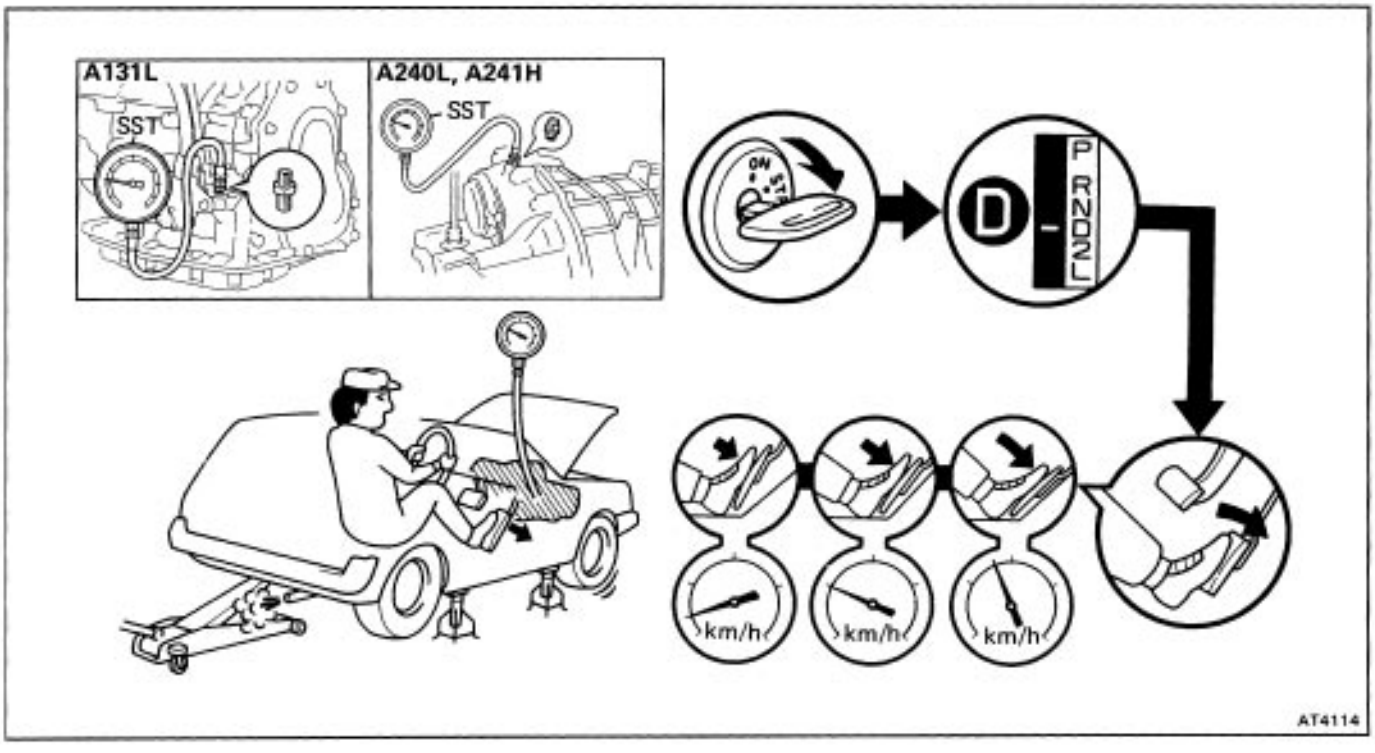

3. MEASURE CENTER DIFFERENTIAL CONTROL PRESSURE (A241H)

(a) Warm up the transaxle fluid (50 – 80˚C or 122 – 176˚F)
(b) Measure the line pressure. (See page AT–24)
(c) Remove the transaxle case test plug and mount the oil pressure gauge (SST).
SST 09992–00094
(d) Check the parking brake to see that it is fully applied chock the four wheels.
(e) Start the engine.
(f) Shift into the D range, Step down strongly on the brake pedal with your left foot and while manipulating the accelerator pedal with the right foot, measure the pressure at the engine speeds specified in the table. In the same manner, perform the test in the L and R ranges.

kg/cm² (psi, kPa)

Differential Control Switch Position	Engine rpm	D range	L range	R range
AUTO	Idling	1.5–2.0 (21–28, 147–196)	7.0–8.6 (100–122, 686–843)	0
	Stall	7.4–9.2 (105–131, 726–902)	8.8–10.7 (125–152, 863–1,049)	0
OFF	Idling	0	0	0
	Stall			

EVALUATION

If the pressure is not within specification:

- Line pressure defective
- Center differential control pressure regulator valve defective
- Center differential control valve defective

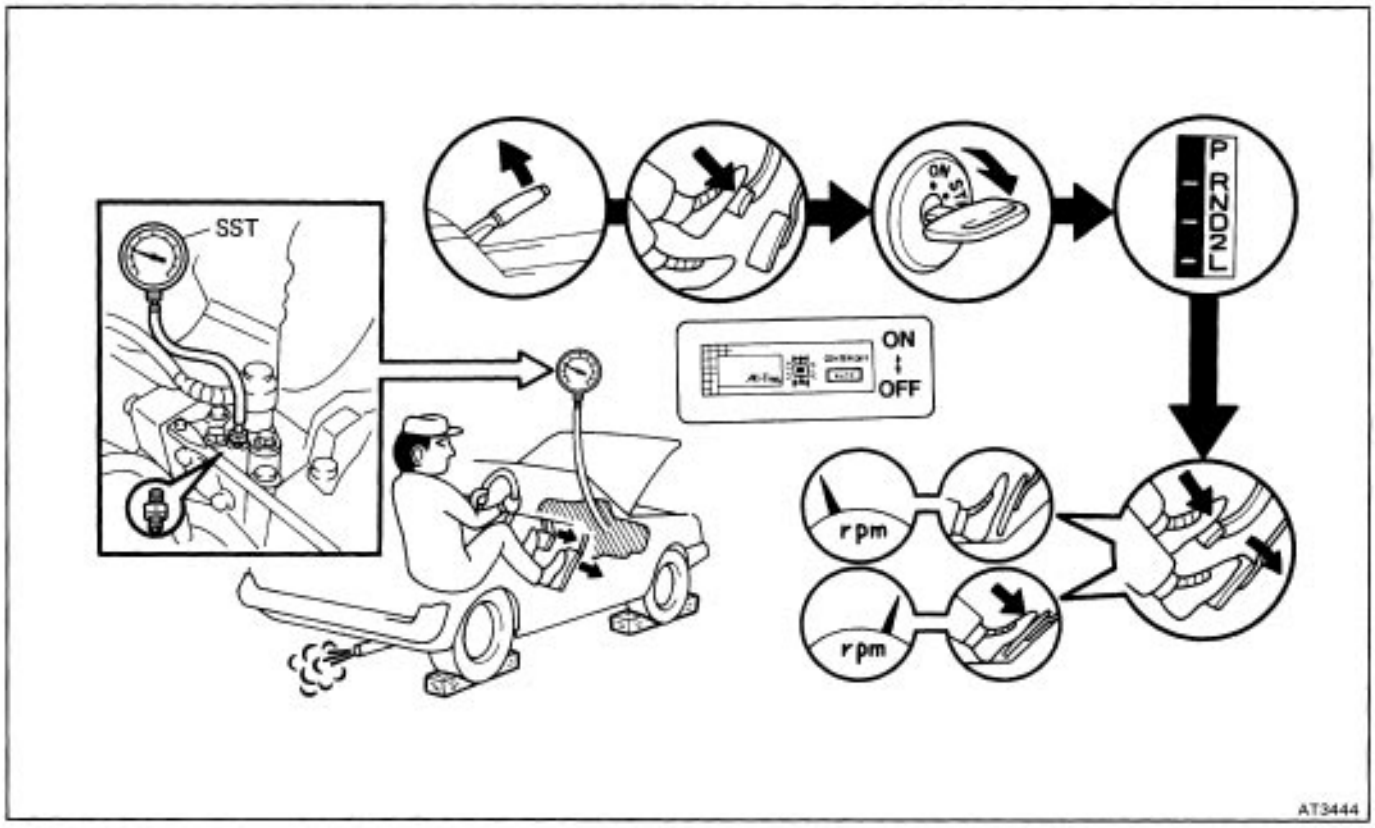

Road Test

NOTICE: Perform this test at normal fluid temperature (50 – 80°C or 122 – 176°F)

1. D RANGE TEST

(A131L)

Shift into D range and white driving with the accelerator pedal held constant at the throttle valve full open, check on the following points:

(a) Check to see that the 1–2 and 2–3 up–shifts take place and also that the shift points conform to those shown in the automatic shift schedule (See page AT–39).

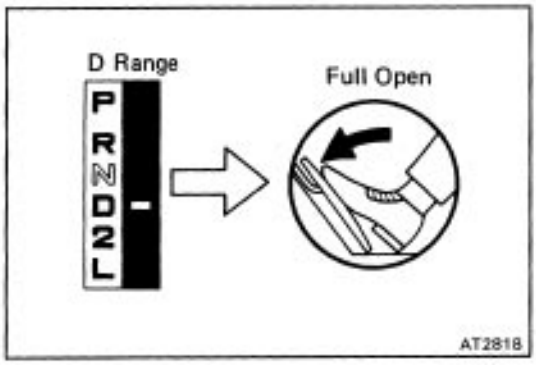

EVALUATION

- If there is no 1–2 up–shift:
  Governor valve is defective
  1–2 shift valve stuck
- If there is no 2–3 up–shift:
  2–3 shift valve stuck
- If the shift point is defective:
  Throttle cable out–of adjustment
  Throttle valve, 1–2 shift valve, 2–3 shift valve, etc. defective

(b) In the same manner, check the shock and the slip at 1–2 and 2–3 up–shifts.

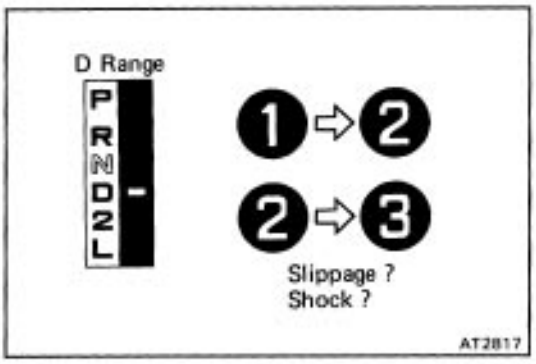

EVALUATION

- If the shock is severe:
  Line pressure is too high
  Accumulator is defective
  Check ball is defective

(c) Run in the 3rd gear of D range, check the abnormal noise and vibration.

HINT: Check for cause of abnormal noise and vibration must be made with extreme care as they could also be due to unbalance in the drive shaft, differential, tires, torque converter, etc..

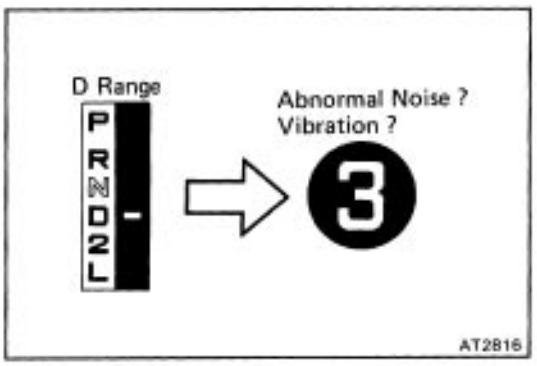

(d) While running in the 3rd gear of D range, check to see that the possible kick–down vehicle speed limits for the 3–1 and 3–2 kick–downs conform to those indicated in the automatic shift schedule (See page AT–39).

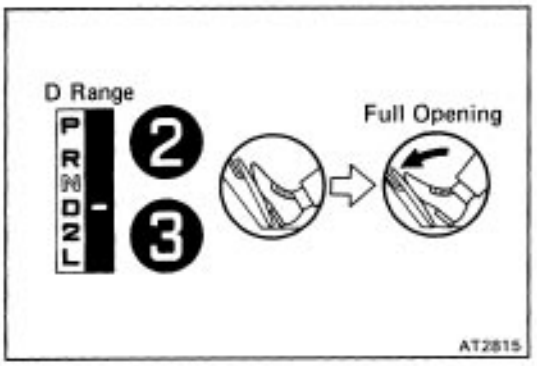

EVALUATION

- If the possible kick–down vehicle speed limit is defective:
  Throttle cable out–of adjustment
  Throttle valve, 1–2 shift valve, 2–3 shift valve, etc. defective

(e) Check the abnormal shock and slip at kick–down.

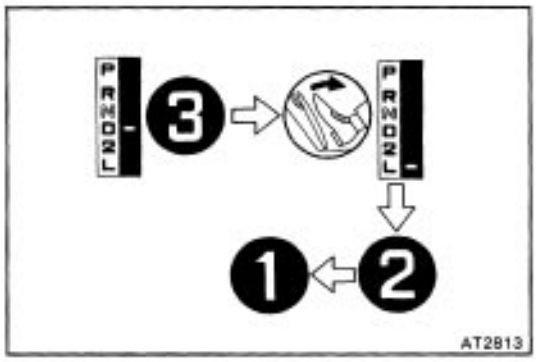

(f) While running about 60 km/h (37 mph) in the 3rd gear of D range, release your foot from the accelerator pedal and shift into L range. Then check to see if the 2–1 down–shift point conform to those indicated in the automatic shift schedule (See page AT–39).

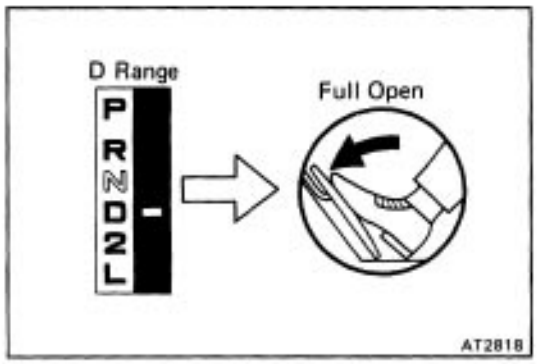

(A240L,A241H)

Shift into D range and while driving with the accelerator pedal held constant at the throttle valve full open, check on the following points:

(a) Check to see that the 1–2, 2–3 and 3–0/13 up–shifts take place and also that the shift points conform to those shown in the automatic shift schedule (See page AT–39).

EVALUATION

- If there is no 1–2 up–shift:
  Governor valve is defective.
  1–2 shift valve stuck.
- If there is no 2–3 up–shift:
  2–3 shift valve stuck.
- If there is no 3–OID up–shift (throttle valve opening less than 86%):
  3–4 shift valve is stuck.
  Solenoid valve or circuit defective.
- If the shift point is defective:
  Throttle cable out–of adjustment.
  Throttle valve, 1–2 shift valve, 2–3 shift valve, 3–4 shift valve, etc. defective.

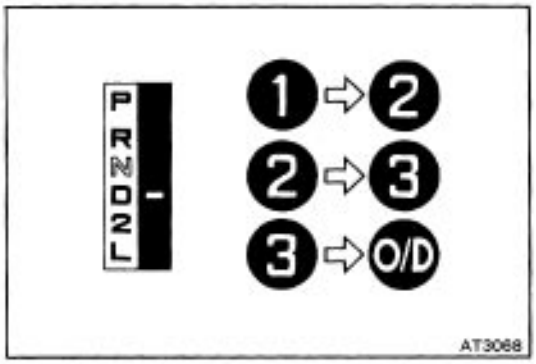

(b) In the same manner, check the shock and the slip at 1–2, 2–3 and 3–O/D up–shifts.

EVALUATION:

- If the shock is severe:
  Line pressure is too high.
  Accumulator is defective.
  Check ball is defective.

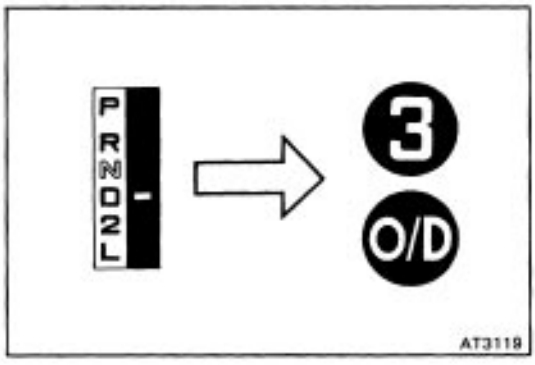

(c) Run in the 3rd gear or O/D of D range and check the abnormal noise and vibration.

HINT: Check for cause of abnormal noise and vibration must be made with extreme care as they could also be due to unbalance in the drive shaft, differential, tires, torque converter, etc..

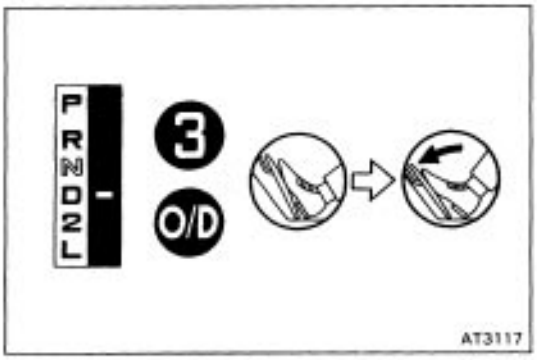

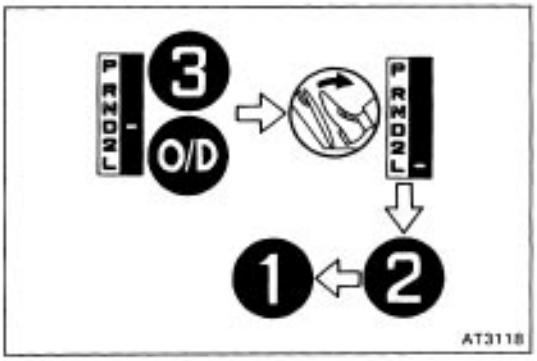

(d) While running in the 3rd gear or O/D of D range, check to see that the possible kick–down vehicle speed limits for the 3–1, 3–2, O/D–3 and O/D–2 kickdowns conform to those indicated in the automatic shift schedule (See page AT–39).

EVALUATION

- If the possible kick–down vehicle speed limit is defective:
  Throttle cable out–of adjustment.
  Throttle valve, 1–2 shift valve, 2–3 shift valve, 3–4 shift valve, etc. defective.

(e) Check for abnormal shock and slip at kick–down.

(f) While running more than 60 km/h (37 mph) in the O/D of D range, release your foot from the accelerator pedal and shift into L range. Then check to see if the 2–1 down–shift point conform to those indicated in the automatic shift schedule (See page AT–39).

2. INSPECT LOCK–UP MECHANISM

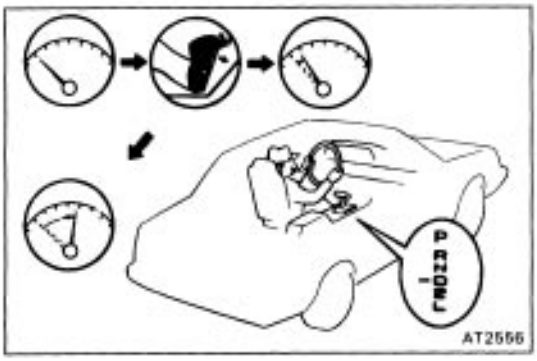

(a) Drive in D range, at a steady speed (Lock–up ON) of about 70 km/h (43 mph).

(b) Lightly depress the accelerator pedal and check that the engine speed does not change abruptly.
If there is a big jump in engine rpm, there is no lock–up.

3. 2 RANGE TEST

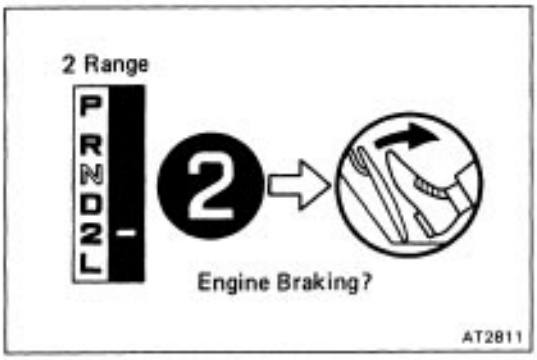

(a) While running in 2 range, 2nd gear, release the accelerator pedal and check the engine braking effect.

EVALUATION

- If there is no engine braking effect:
  Second coast brake is defective.

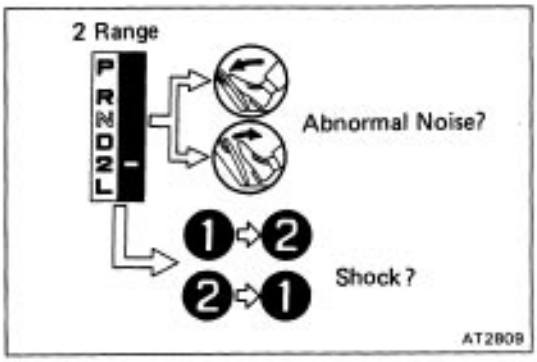

(b) Check the abnormal noise during acceleration and deceleration.

(c) Check the shock at up–shift and down–shift.

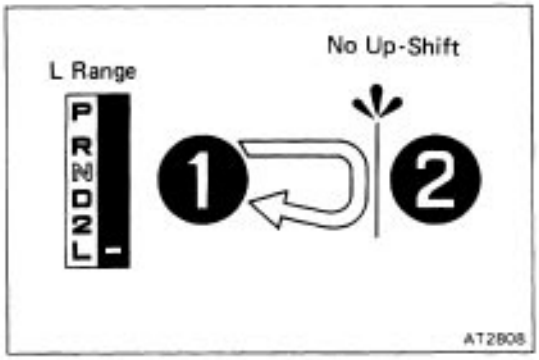

4. L RANGE TEST

(a) While running in L range, check to see that there is no up–shift to 2nd gear.

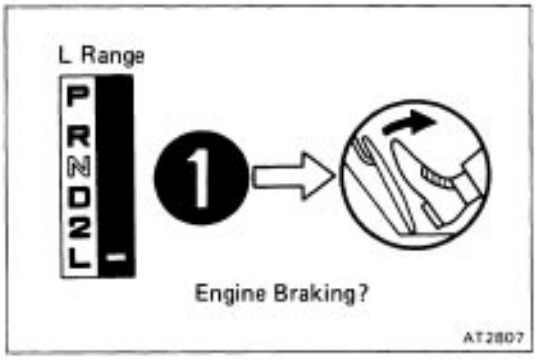

(b) While running in L range, release the accelerator pedal and check the engine braking effect.

EVALUATION

- If there is no engine braking effect:
  First and reverse brake defective.

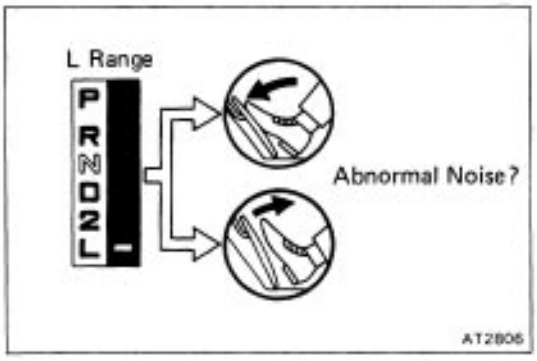

(c) Check the abnormal noise during acceleration and deceleration.

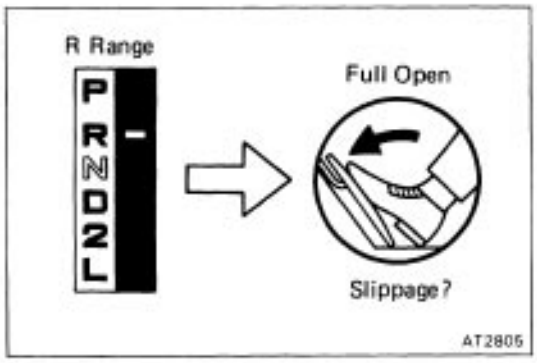

5. R RANGE TEST

Shift into R range and, while running at full throttle, check the slipping.

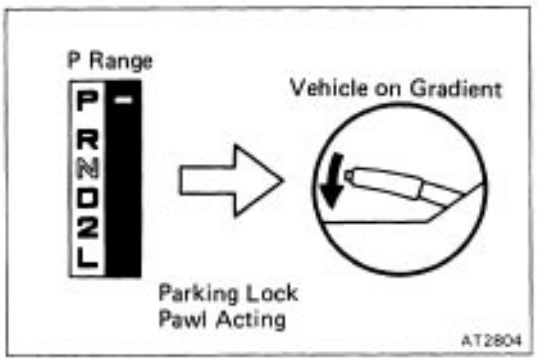

6. P RANGE TEST

Stop the vehicle on a gradient (more than 9%) and, after shifting into P range, release the parking brake. Then check to see that the parking lock pawl prevents the vehicle from moving.

INSPECTION OF CENTER DIFFERENTIAL CONTROL SYSTEM (A241H)

1. PRELIMINARY CHECK

(a) Warm up the engine.
(b) Check idle speed.
Idle speed: 750 – 900 rpm
(c) Check wheel alignment. (See page SA–4)
(d) Check the transaxle fluid and transfer oil level.

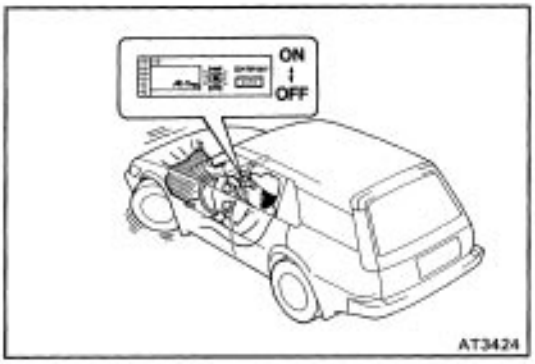

2. CHECK CENTER DIFFERENTIAL CONTROL OPERATION

(a) Turn the steering wheel to left of right lock position.
(b) Shift into the L range.
(c) Start the vehicle, do not depress the accelerator pedal.
(d) Confirm the shock of the center differential control operation and tight corner phenomenon by setting and resetting the center differential control system repeatedly with the center differential control switch (AUTO button).

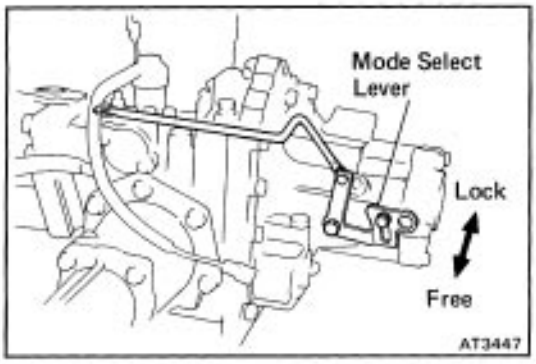

3. INSPECT MODE SELECT LEVER POSITION

Be sure the select lever position to FREE mode and attach the lock bolt.
HINT: If the lever position is not FREE, the center differential control does not operate.

Electric Control System

COMPONENTS

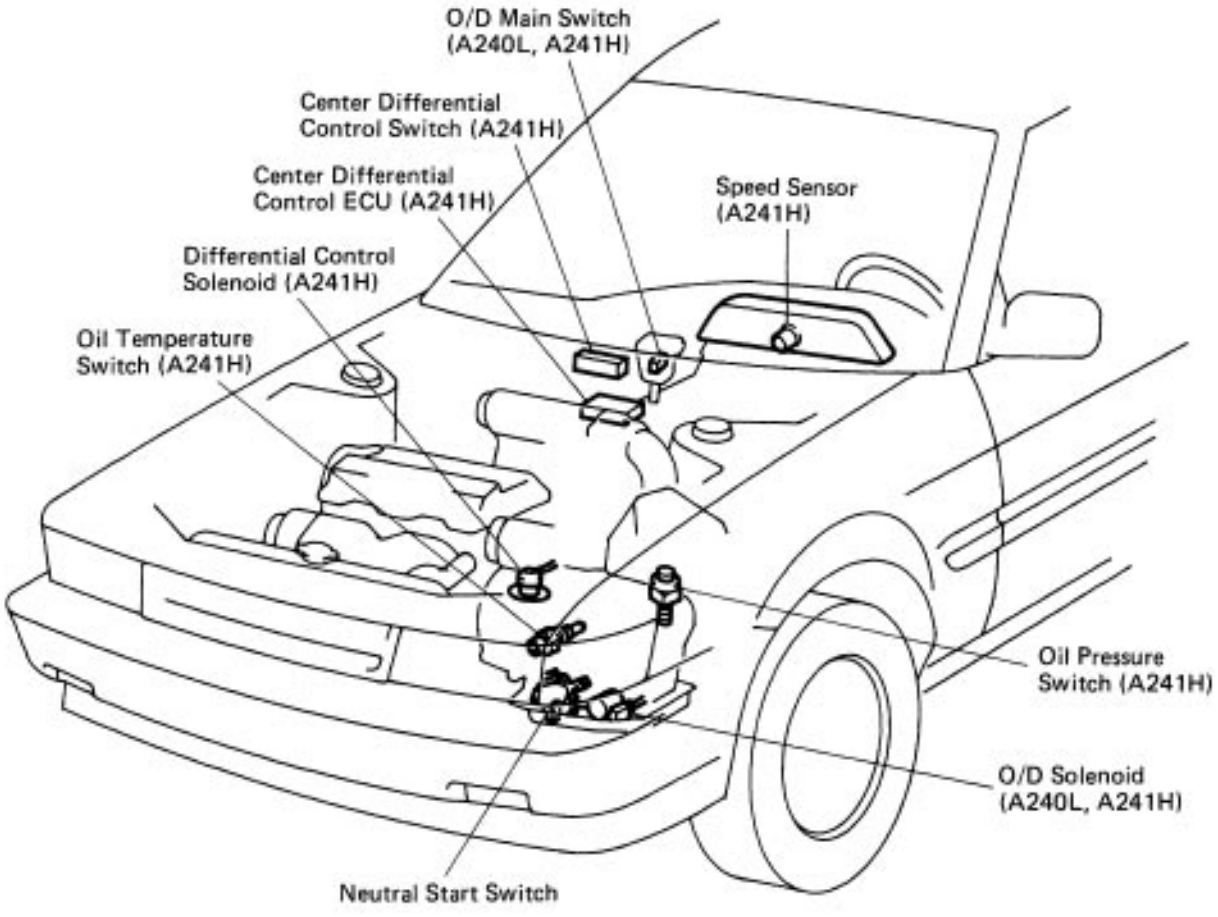

Center Differential Control ECU (A241H)

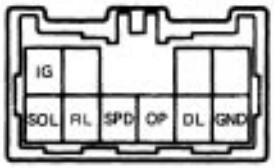

Center Differential Control Switch (A241H)

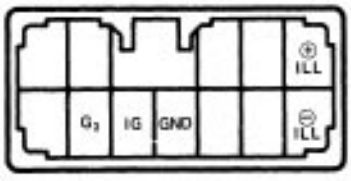

Differential Control Solenoid (A241H)



Oil Pressure Switch (A241H)



Oil Temperature Switch (A241H)



O/D Solenoid (A240L, A241H)



O/D Main Switch (A240L, A241H)



U-10-2 S-12-2 H-1-2
IS-1-2-A IH-1-2-A IS-3-2-A S-4-1-B

CIRCUIT

Center Differential Control Circuit (A241H)

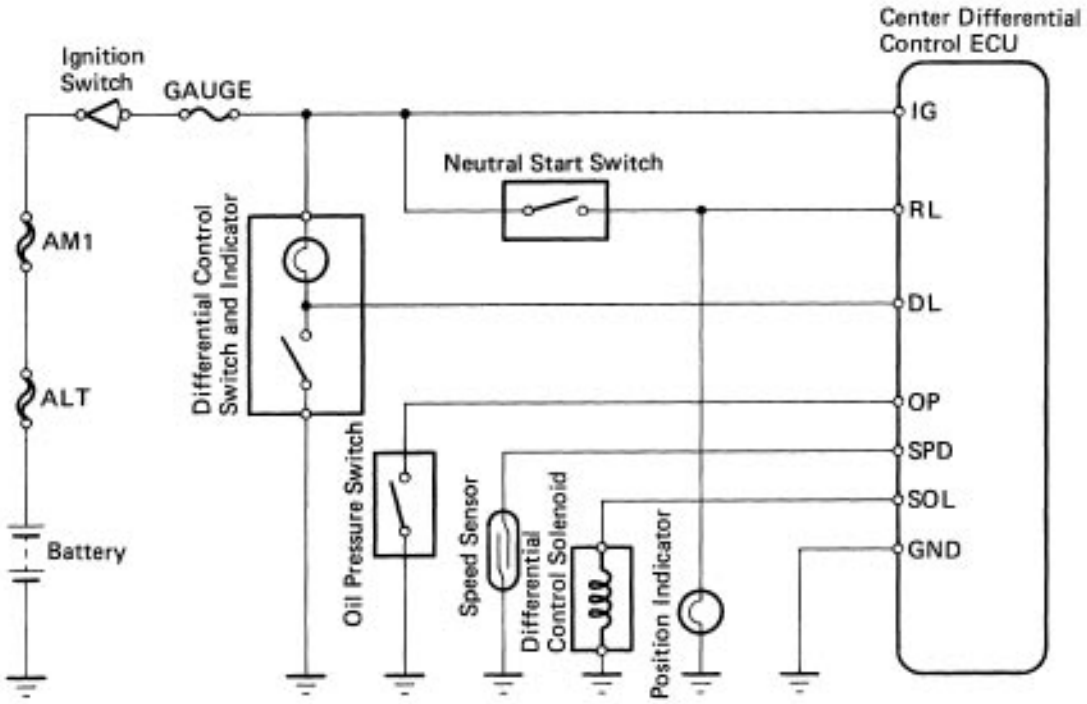

O/D Control Circuit (A240L, A241H)

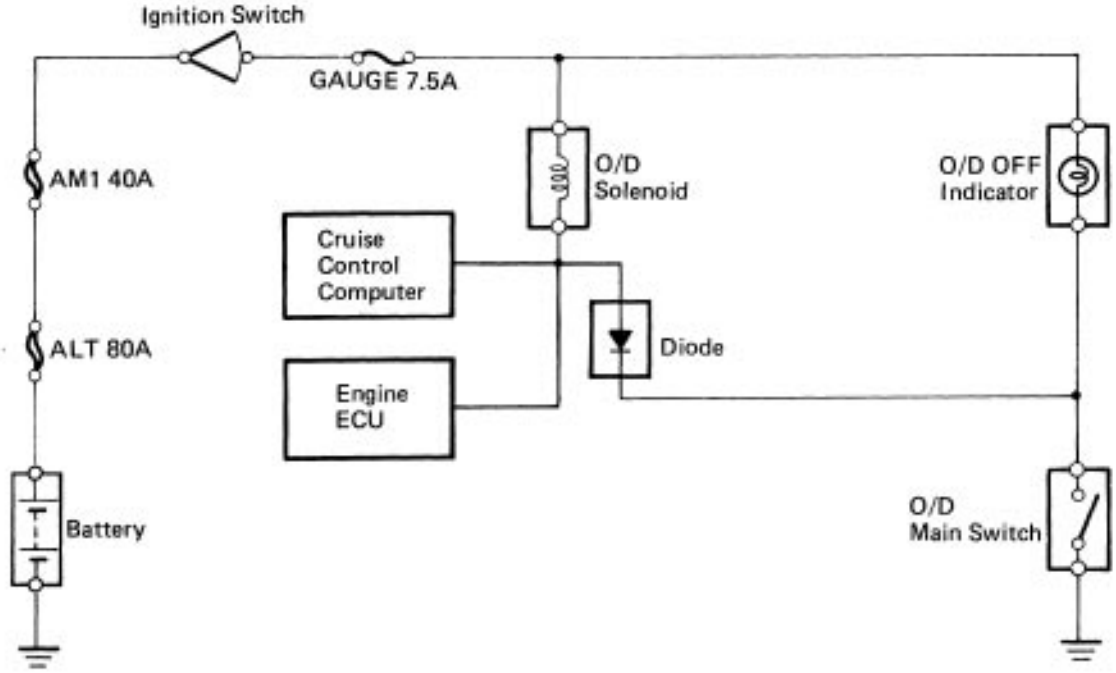

AT5557
AT5697

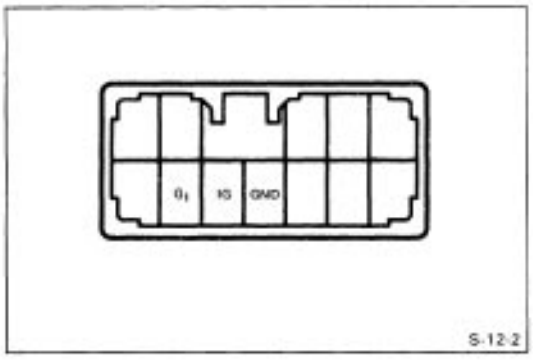

INSPECTION OF ELECTRIC CONTROL COMPONENTS

(A241H/Center Differential Control System)

1. INSPECT DIFFERENTIAL CONTROL SWITCH

(a) Remove the differential control switch.

(b) Using an ohmmeter, measure the resistance at each terminal.

Terminals	Condition	Resistance
IG – G_1	–	0 Ω
IG – GND	Switch positon AUTO	0 Ω
	Switch positon OFF	∞ Ω

If not, replace the switch.

(c) Install the differential control switch.

2. INSPECT SPEED SENSOR (See page BE–37)

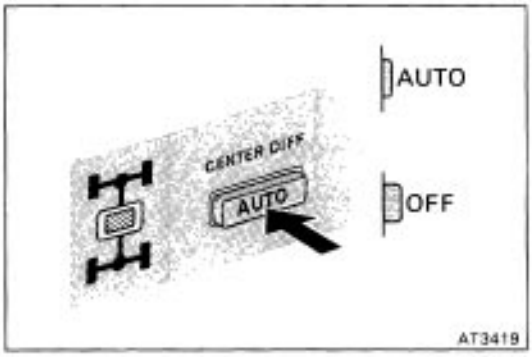

3. INSPECT DIFFERENTIAL CONTROL SOLENOID

(a) Disconnect the differential control solenoid connector.

(b) Using an ohmmeter, measure the resistance between terminal and body ground.

Resistance: 10– 16Ω

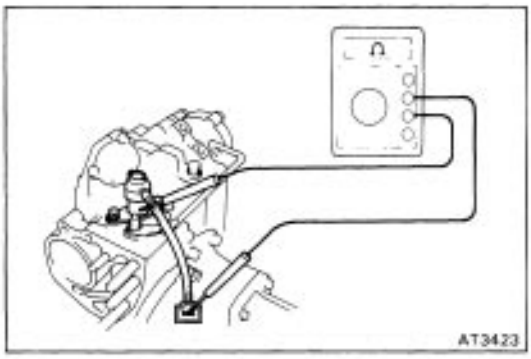

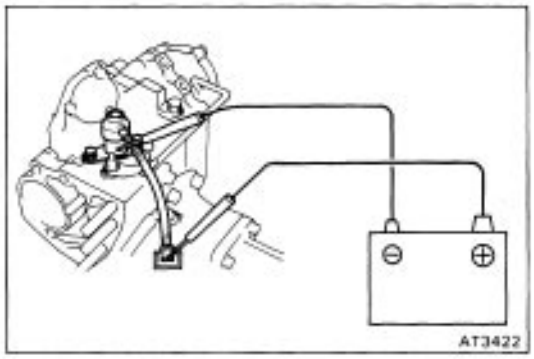

(c) Apply battery voltage between terminal and body ground. At this time, confirm that a solenoid operation sound in head.

If not, replace the solenoid.

(d) Connect the differential control solenoid connector.

4. INSPECT OIL PRESSURE SWITCH

(a) Remove the oil pressure switch.

(b) Using an ohmmeter, measure the resistance between terminal and switch body.

Resistance: ∞ Ω

(c) While blowing low–compressed air (2 kg–cm, 28 psi or 196 kPa) into the switch, measure the resistance.

Resistance: 0Ω

If not, replace the oil pressure switch.

(d) Install the oil pressure switch.

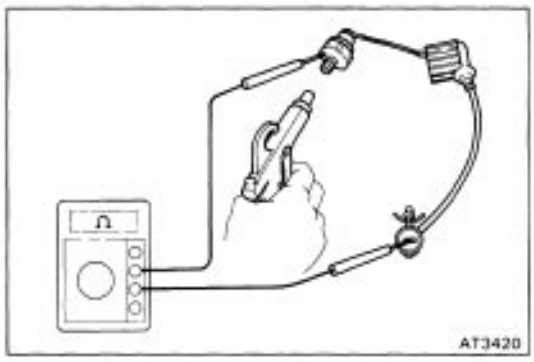

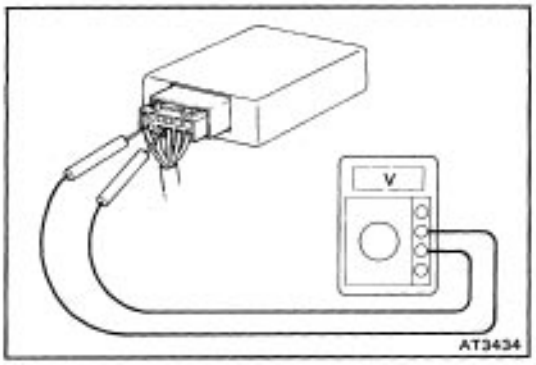

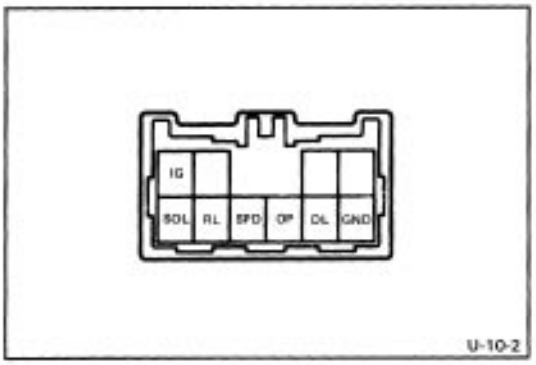

5. INSPECT CENTER DIFFERENTIAL CONTROL COMPUTER CIRCUIT

(a) Remove the center console box.
(b) Turn on the ignition switch.
(c) Measure the voltage at each terminals.

Terminals	Condition	Voltage (V)
IG – GND	–	12
DL – GND	Differential control switch AUTO position	0
	Differential control switch OFF position	12
OP – GND	–	12
	Oil pressure switch ON (O/D gear running)	0
SPD – GND	Slowly rotate front both wheels	0–12–0–12–0
SOL – GND	Differential control solenoid ON	12
	Differential control solenoid OFF	0
RL – GND	Shift the R range	12
	Shift the P, N, D, 2, L range	0

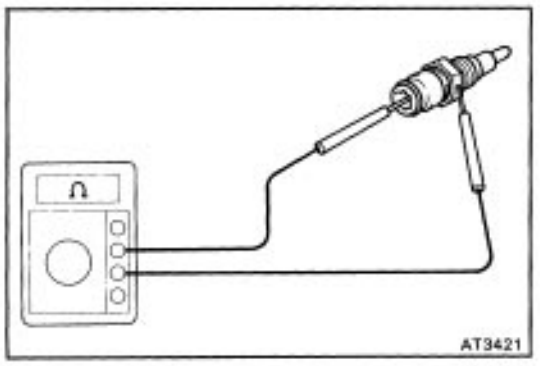

6. INSPECT OIL TEMPERATURE SWITCH

Using an ohmmeter, measure the resistance between terminal and switch body.

Resistance:

Oil temperature Below 130° C (266° F) ∞ Ω
Above 150°C (302° F) 0Ω

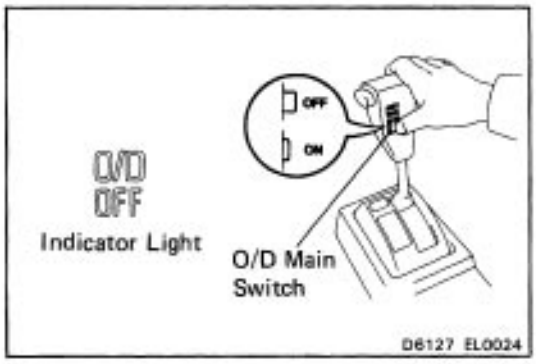

(A240L, A241H/O/D Control System)

1. INSPECT O/D OFF INDICATOR LIGHT

(a) Turn on the ignition switch.

(b) The O/D OFF light will come on when the O/D main switch is placed at OFF.

(c) When the O/D main switch is set to ON, the O/D OFF light should go out.

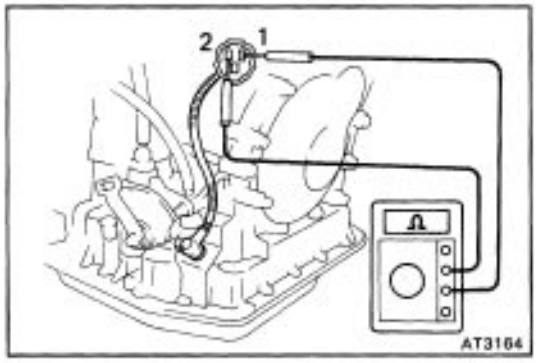

2. INSPECT O/D SOLENOID

(a) Disconnect the solenoid connector.

(b) Using an ohmmeter, measure the resistance between terminal 1 and 2.

Resistance: 11 – 15Ω

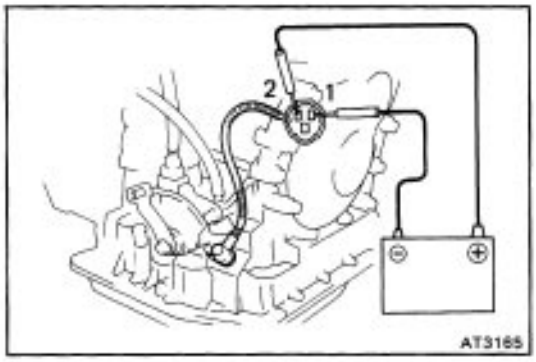

(c) Apply battery voltage between terminal 1 and 2. At this time, confirm that a solenoid operation sound is heard.
If not, replace the solenoid.

(d) Connect the solenoid connector.

3. INSPECT O/D MAIN SWITCH

(a) Remove the center console box.

(b) Using an ohmmeter, check that the continuity of the terminals 1 and 3 for each switch position.

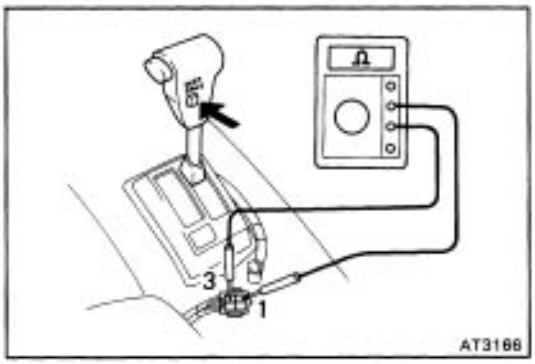

Terminal / Switch position	1	3
ON		
OFF	○	○

If not, replace the switch.

(c) Install the center console box.

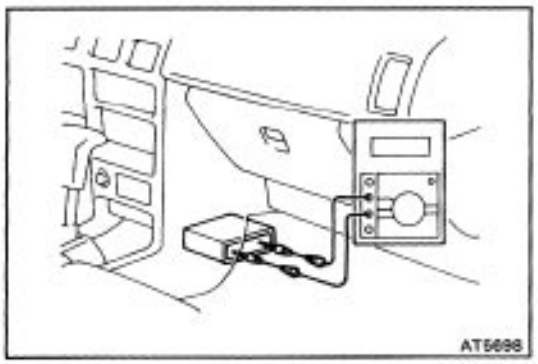

(A240L O D Cut System)

INSPECT VOLTAGE OF ENGINE ECU CONNECTOR

(a) Turn on the ignition switch.

(b) Measure the voltage at each terminal.

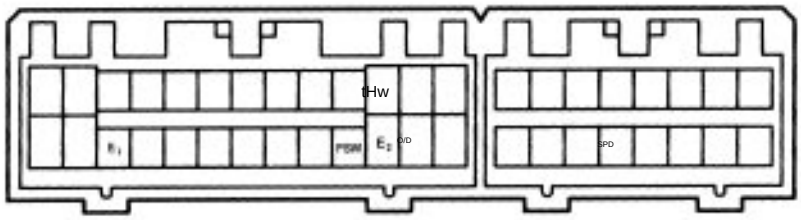

R2879

Terminal	Measuring condition	Voltage (V)
PSW – E2	Throttle valve fully closed	10– 14
	Throttle valve fully open	0.5 or less
THW – E2	Water temp. approx. 68˚F (20˚C)	2.0– 2.5
	Water temp. approx. 176˚F (80˚C)	0.4–0.7
SPD – El	Rotate the front wheel slowly	0↔10 – 14↔0↔10 – 14
O/D – E,	Water temp. 131 ˚F (55˚C) or more	11 or less
	Water temp. 131 ˚F (55˚C) or less	1.5 or less

Neutral Start Switch

INSPECT NEUTRAL START SWITCH

Using an ohmmeter, check the continuity of the terminals for each switch position shown in the table below.

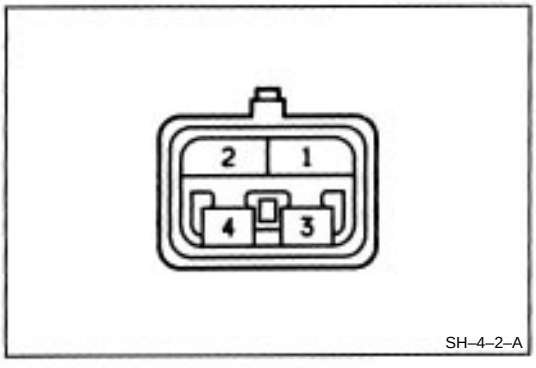

Range \ Terminal	1	2	3	4
P			○—○	
R	○—○			
N			○—○	

If not as shown, replace the switch.

OPERATING MECHANISM FOR EACH GEAR

A731L

○ ...Operating

Shift lever position	Gear position	C_1	C_2	B_1	B_2	B_3	F_1	F_2
P	Parking							
R	Reverse		○			○		
N	Neutral							
D	1st	○						○
	2nd	○			○		○	
	3rd	○	○		○			
2	1 st	○						○
	2nd	○		○	○		○	
L	1st	○				○		○
	* 2nd	○		○	○		○	

* Down–shift in L range, 2nd gear only – no up–shift.

A 240 L, A 241 H

○ ...Operating

Shift lever position	Gear position	C_1	C_2	C_3	B_1	B_2	B_3	B_4	F_1	F_2	F_3
P	Parking							○			
R	Reverse		○				○	○			
N	Neutral							○			
D	1 st	○						○		○	○
	2nd	○				○		○	○		○
	3rd	○	○			○		○			○
	OD	○	○	○		○					
2	1 st	○						○		○	○
	2nd	○			○	○		○	○		○
L	1 st	○					○	○		○	○
	* 2nd	○			○	○		○	○		○

* Down–shift only in L range, 2nd gear – no up–shift.

AUTOMATIC SHIFT SCHEDULE

A131L (Differential Gear Ratio: 3.526)

km/h (mph)

Shift range	D range						L range
Throttle valve opening	100%		0%		100%		0%
Gear position	1→2	2→3	Lock-up ON	Lock-up OFF	3→2	2→1	2→1
Vehicle speed (Reference)	53–69 (33–43)	102–118 (63–73)	71–80 (44–50)	66–75 (41–47)	96–115 (60–71)	38–48 (24–30)	41–51 (25–32)

A131L (Differential Gear Ratio: 3.722, OPT for U.S.A.)

km/h (mph)

Shift range	D range						L range
Throttle valve opening	100%		0%		100%		0%
Gear position	1→2	2→3	Lock-up ON	Lock-up OFF	3→2	2→1	2→1
Vehicle speed (Reference)	50–65 (31–40)	97–112 (60–70)	67–75 (42–47)	62–71 (39–44)	91–109 (57–68)	36–46 (22–29)	39–49 (24–30)

A240L

km/h (mph)

Shift range	D range								L range
Throttle valve opening	100%		0%				100%		0%
Gear position	1→2	2→3	3→OD	Lock-up ON	Lock-up OFF	OD→3	3→2	2→1	2→1
Vehicle speed (Reference)	45–61 (28–38)	90–105 (56–65)	30–46 (19–29)	69–77 (43–48)	65–73 (40–45)	15–28 (9–17)	85–103 (53–64)	33–44 (21–27)	41–53 (25–33)

A241H

km/h (mph)

Shift range	D range								L range
Throttle valve opening	100%		0%				100%		0%
Gear position	1→2	2→3	3→OD	Lock-up ON	Lock-up OFF	OD→3	3→2	2→1	2→1
Vehicle speed (Reference)	46–61 (29–38)	90–105 (56–65)	18–31 (11–19)	66–76 (41–47)	62–72 (39–45)	14–25 (9–16)	83–101 (52–63)	38–46 (24–29)	42–53 (26–33)

ON–VEHICLE REPAIR

Valve Body

REMOVAL OF VALVE BODY

(A131L: See pages AT–51 and AT–52)
(A240L: See pages AT–69 to AT–71)
(A241H: See pages AT–95 to AT–97)

DISASSEMBLY AND ASSEMBLY OF VALVE BODY

(A131L: See page AT–160)
(A240L: See page AT–171)
(A241H: See page AT–182)

INSTALLATION OF VALVE BODY

(A131L: See pages AT–288 to AT–290)
(A240L: See pages AT–316 to AT–318)
(A241H: See pages AT–345 to AT–347)

Throttle Cable

REMOVAL OF THROTTLE CABLE

1. **DISCONNECT THROTTLE CABLE FROM ENGINE**
2. **REMOVE NEUTRAL START SWITCH**
3. **REMOVE VALVE BODY**
4. **REMOVE THROTTLE CABLE**

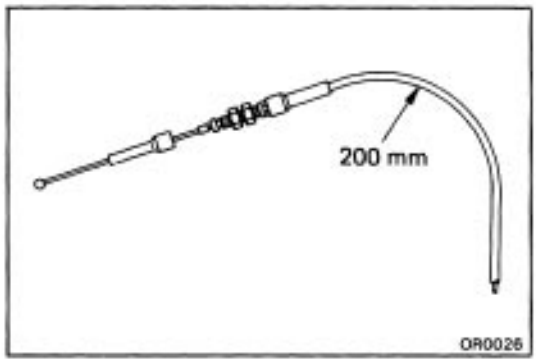

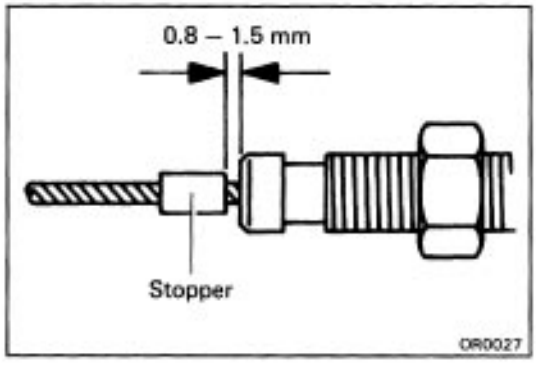

INSTALLATION OF THROTTLE CABLE

1. **INSTALL CABLE INTO TRANSMISSION CASE**
2. **INSTALL VALVE BODY**
3. **IF THROTTLE CABLE IS NEW, STAKE STOPPER ON INNER CABLE**

   HINT: New cable do not have a cable stopper staked.

   (a) Bend the cable so there is a radius of about 200 mm (7.87 in.).

   (b) Pull the inner cable lightly until a slight resistance is felt, and hold it.

   (c) Stake the stopper, 0.8 – 1.5 mm (0.031 – 0.059 in.) from the end of outer cable.
4. **CONNECT THROTTLE CABLE TO ENGINE**
5. **ADJUST THROTTLE CABLE (See page AT–20)**
6. **INSTALL AND ADJUST NEUTRAL START SWITCH**
7. **TEST DRIVE VEHICLE**

Governor Valve

REMOVAL OF GOVERNOR VALVE

1. REMOVAL TRANSAXLE DUST COVER

2. (A131L)

DISCONNECT LH DRIVE SHAFT (See pages SA–16 and SA–17)

3. REMOVE GOVERNOR VALVE

(A131L: See page AT–5 1)

(A240L: See page AT–68)

(A241H: See pages AT–94 and AT–95)

INSTALLATION OF GOVERNOR VALVE

1. INSTALL GOVERNOR VALVE

(A131L: See page AT–290)

(A240L: See page AT–319)

(A241H: See pages AT–347 and AT–348)

2. (Al 31L)

CONNECT LH DRIVE SHAFT (See pages SA–26 and SA–27)

3. INSTALL TRANSAXLE DUST COVER

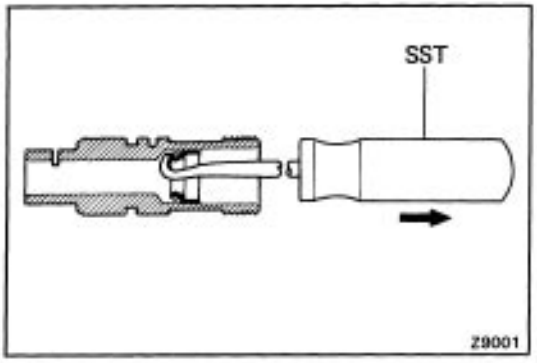

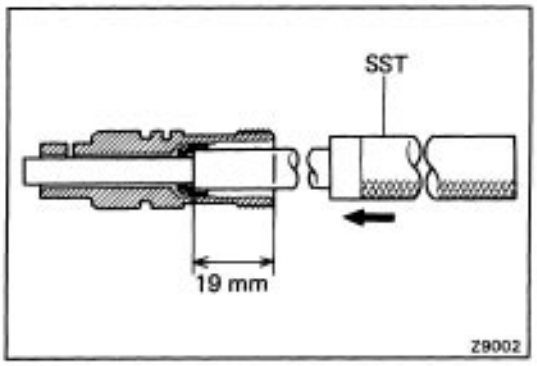

Speedometer Driven Gear

REPLACEMENT OF SPEEDOMETER DRIVEN GEAR OIL SEAL

1. REMOVE SPEEDOMETER DRIVEN GEAR OIL SEAL

Using SST, pull out the oil seal.

SST 09921–00010

2. INSTALL SPEEDOMETER DRIVEN GEAR OIL SEAL

Using SST, drive in the oil seal.

SST 09201–60011

Drive in depth: 19 mm (0.75 in.)

Output Shaft Oil Seal (A241H)

REPLACEMENT OF OUTPUT SHAFT OIL SEAL

1. DRAIN TRANSFER OIL

2. REMOVE PROPELLER SHAFT

(See page PR–3)

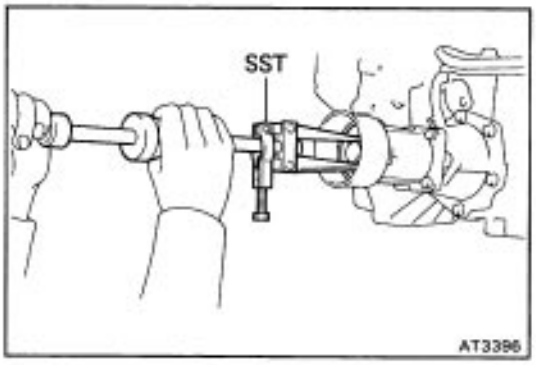

3. REMOVE OUTPUT SHAFT OIL SEAL

Using SST, remove the oil seal.

SST 09308–00010

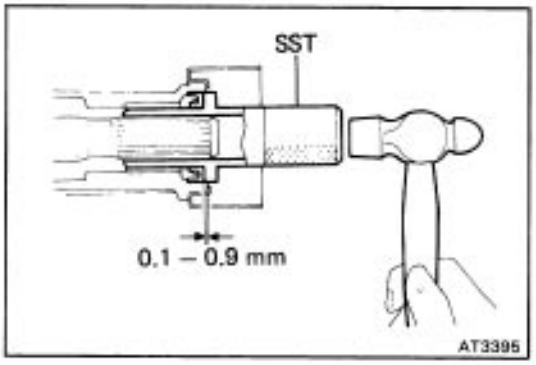

4. INSTALL OUTPUT SHAFT OIL SEAL

Using SST, drive in a new oil seal.

SST 09325–20010

Oil seal depth: 0.1 – 0.9 mm (0.004 – 0.035 in.)

5. INSTALL PROPELLER SHAFT

(See page PR–7)

6. FILL TRANSFER WITH TRANSAXLE OIL

(See page AT–20)

REMOVAL AND INSTALLATION OF TRANSAXLE (A131L A240L)

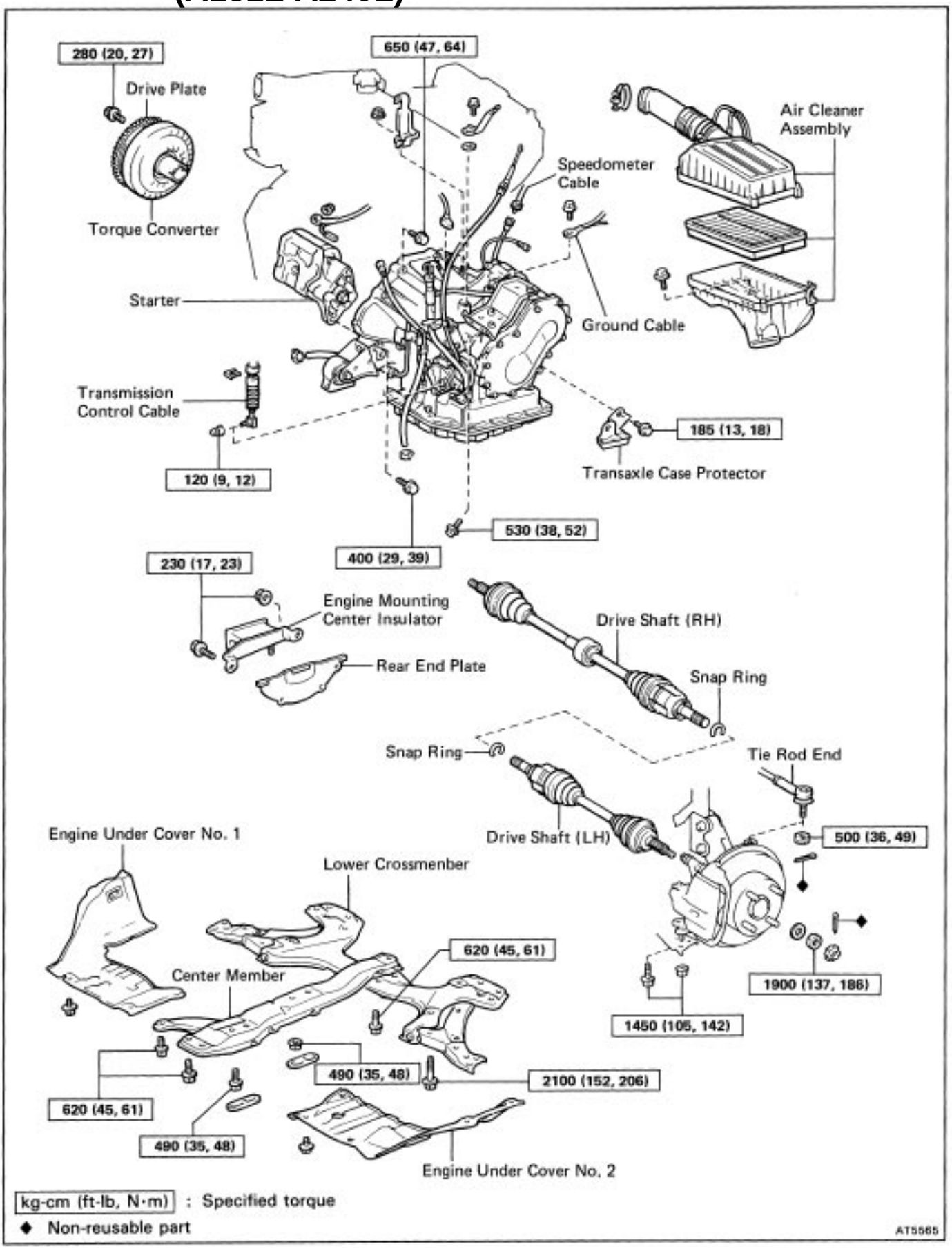

(A241H)

REMOVAL AND INSTALLATION OF ENGINE

(See pages EM–118 and EM–158)

REMOVAL AND INSTALLATION OF TRANSAXLE

(Remove and install transaxle as shown)

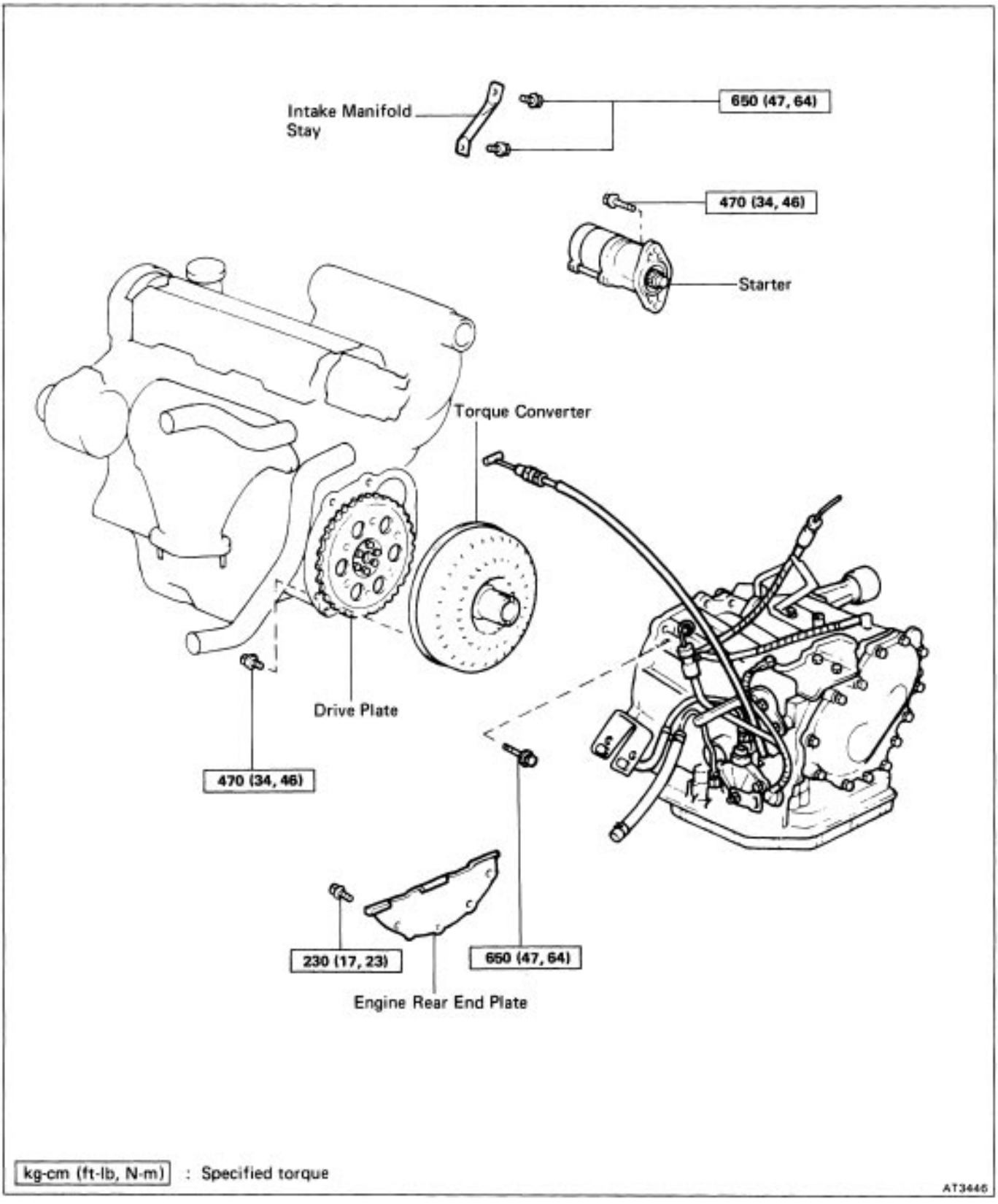

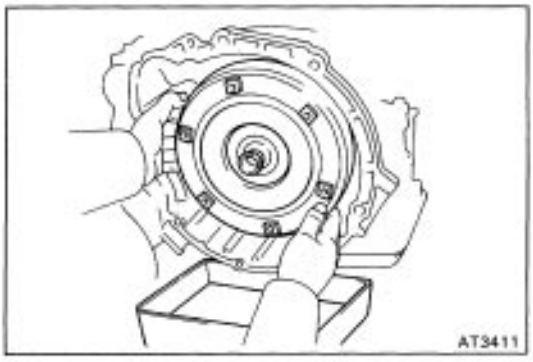

(MAIN POINT OF INSTALLATION)

1. INSTALL TORQUE CONVERTER IN TRANSMISSION

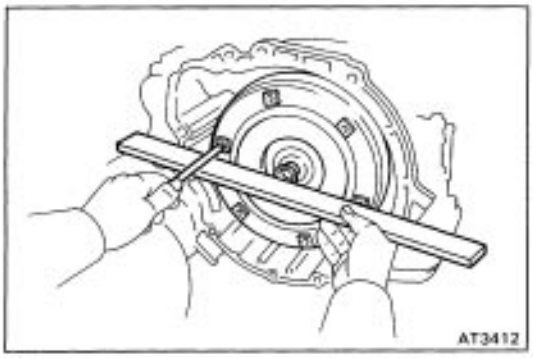

2. CHECK TORQUE CONVERTER INSTALLATION

Using a scale and a straight edge, measure from the installed surface to the front surface of the transmission housing.

Correct distance: 23.0 mm (0.906 in.)

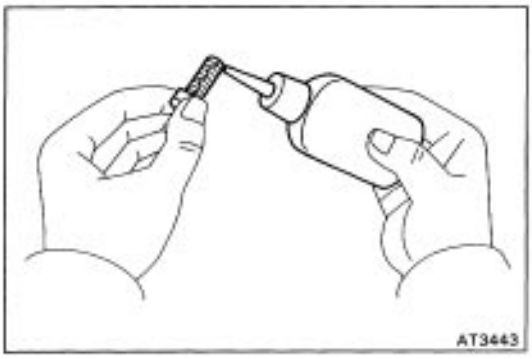

3. INSTALL TORQUE CONVERTER MOUNTING BOLTS

(a) Clean the threads of the bolts with the gasoline.

(b) Coat the threads of the bolts with sealer.

Sealer: Part No. 08833–00070, THREE BOND 1324 or equivalent.

(c) Tighten the bolts evenly.

Torque: 280 kg–cm (20 ft–lb, 27 N–m)

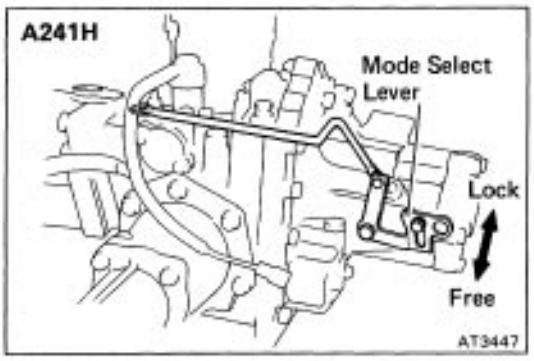

4. (A241H/Transfer)

INSPECT MODE SELECT LEVER POSITION

After finishing inspection or repair the transaxle, be sure the mode select lever position to FREE mode and attach the lock bolt.

TORQUE CONVERTER

CLEAN TORQUE CONVERTER

If the transmission is contaminated, the torque converter and transmission cooler should be thoroughly flushed with ATF.

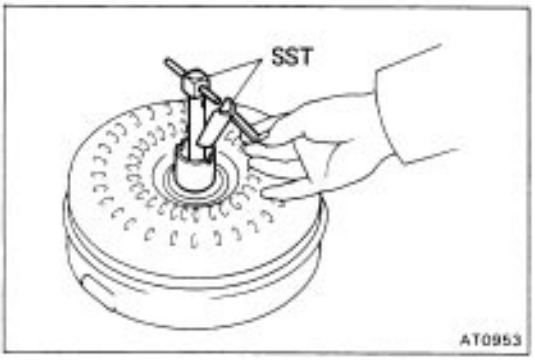

INSPECTION OF TORQUE CONVERTER

1. INSPECT ONE–WAY CLUTCH

(a) Insert SST in the inner race of the one–way clutch.
SST 09350–32014 (09351–32010)

(b) Install SST so that it fits in the notch of the converter hub and outer race of the one–way clutch.
SST 09350–32014 (09351–32020)

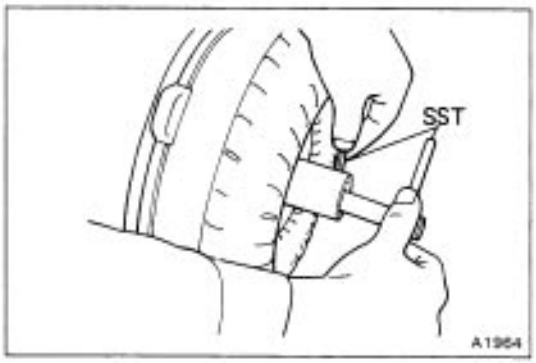

(c) With the torque converter standing on its side, the clutch should lock when turned counterclockwise, and should rotate freely and smoothly clockwise.
If necessary, clean the converter and retest the clutch.
Replace the converter if the clutch still fails the test.

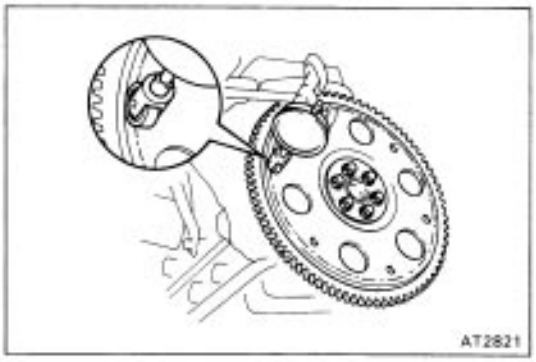

2. MEASURE DRIVE PLATE RUNOUT AND INSPECT RING GEAR

Set up a dial indicator and measure the drive plate runout. If runout exceeds 0.20 mm (0.0079 in.) or if the ring gear is damaged, replace the drive plate. if installing a new drive plate, note the orientation of the spacers and tighten the bolts.

Torque: 650 kg–cm (47 ft–lb, 64 N–m)

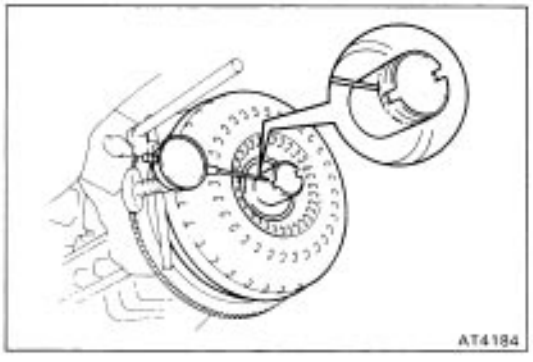

3. MEASURE TORQUE CONVERTER SLEEVE RUNOUT

(a) Temporarily mount the torque converter to the drive plate. Set up a dial indicator.
If runout exceeds 0. 30 mm (0.01 18 in.), try to correct it by reorienting the installation of the converter.
If excessive runout cannot be corrected, replace the torque converter.

HINT: Mark the position of the converter to ensure correct installation.

(b) Remove the torque converter from the drive plate.

REMOVAL OF COMPONENT PARTS (A131L)

COMPONENTS

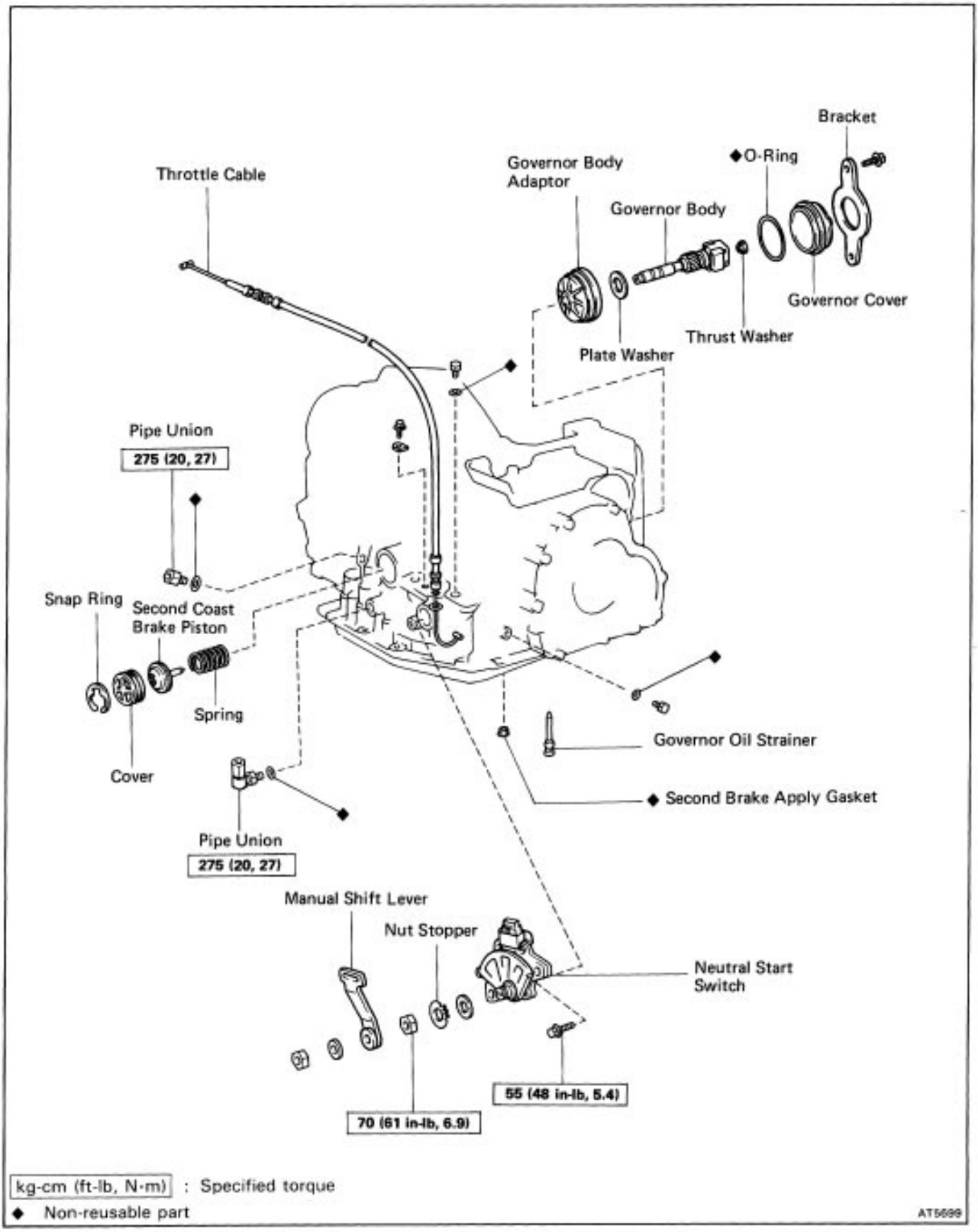

COMPONENTS (Cont'd)

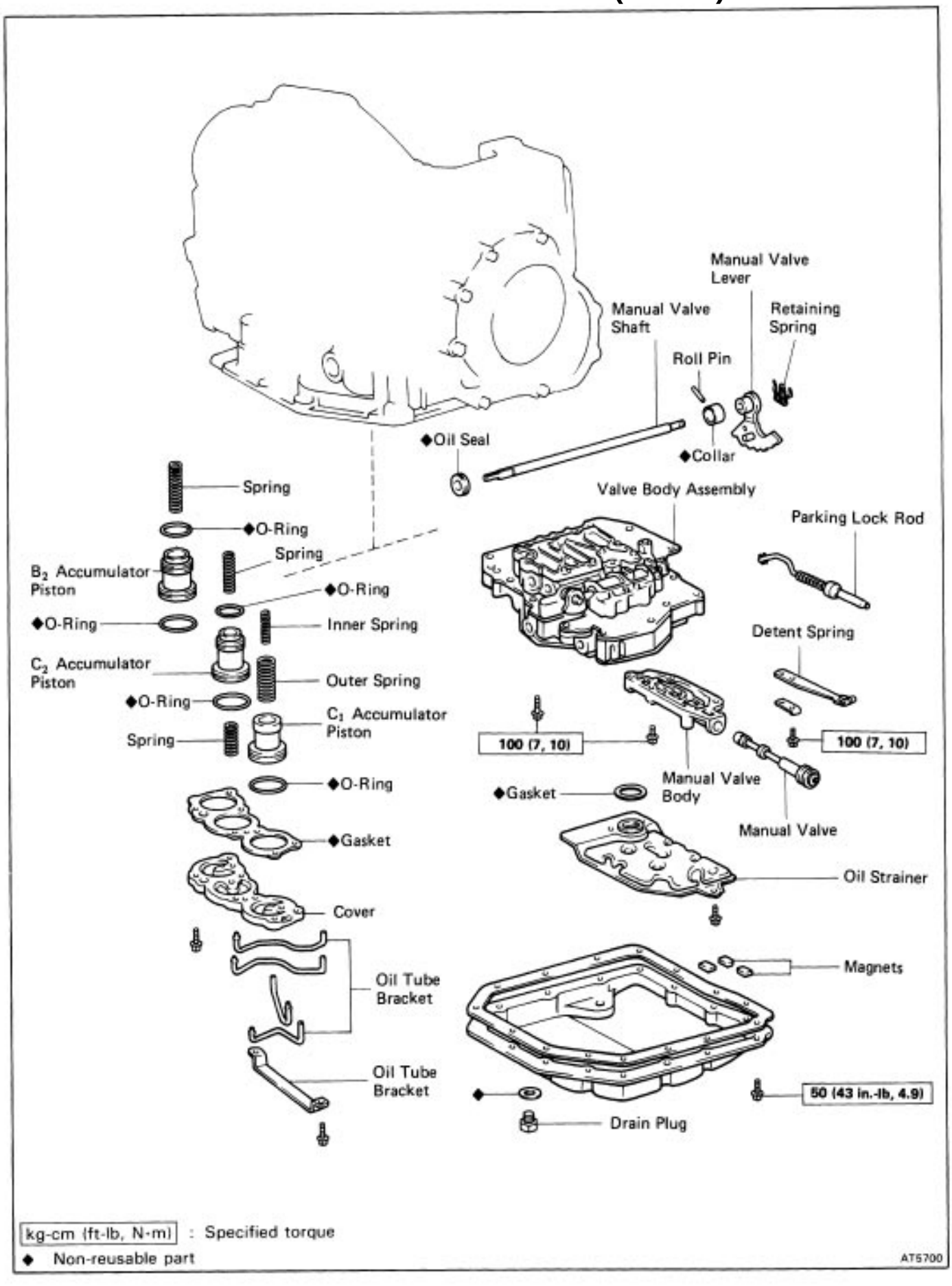

COMPONENTS (Cont'd)

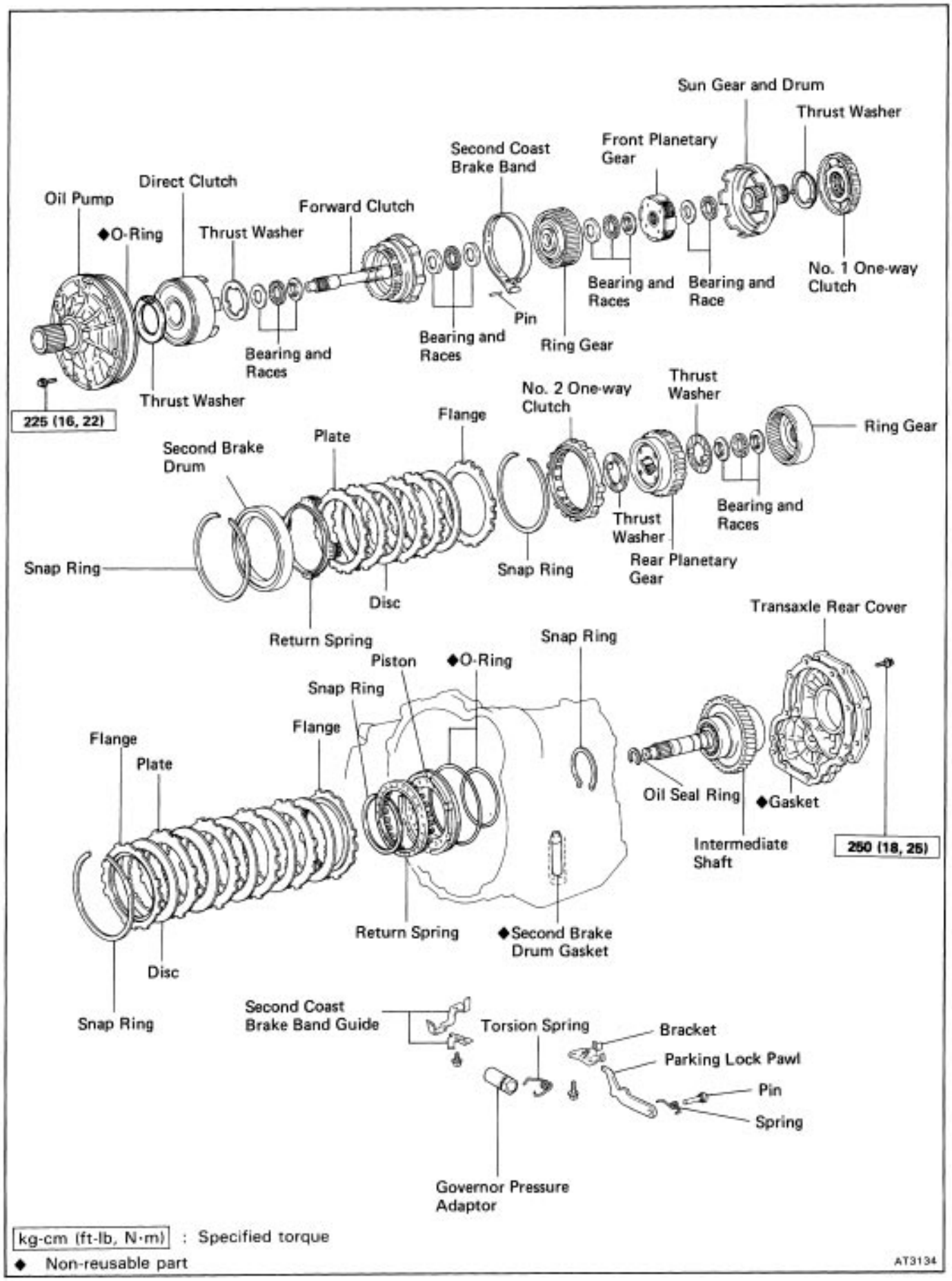



SEPARATE BASIC SUBASSEMBLY

1. REMOVE OIL COOLER PIPES AND UNIONS

(a) Using the open end wrench, remove the two oil cooler pipes and unions.

(b) Remove the O–ring from the oil cooler pipe union.

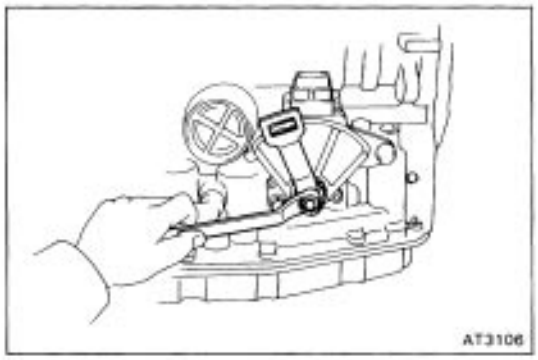

2. REMOVE NEUTRAL START SWITCH

(a) Remove the manual shift lever.

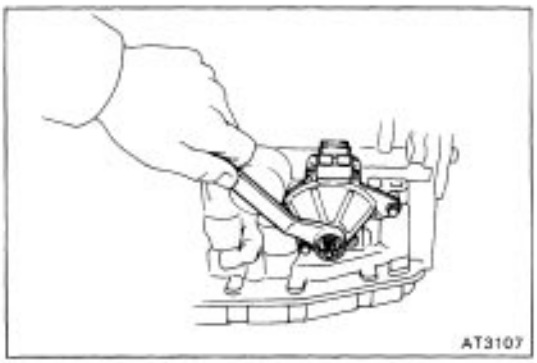

(b) Pry off the lock washer and remove the manual valve shaft nut.

(c) Remove the two bolts and pull out the neutral start switch.

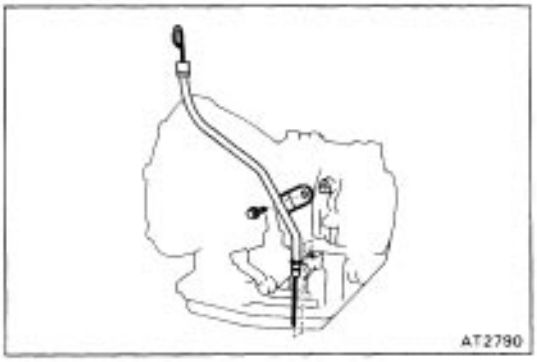

3. REMOVE OIL FILLER TUBE AND DIPSTICK

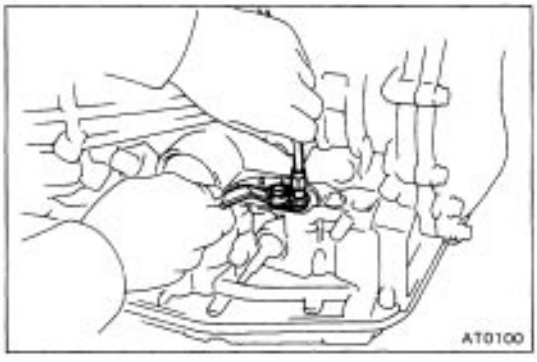

4. REMOVE THROTTLE CABLE RETAINING PLATE

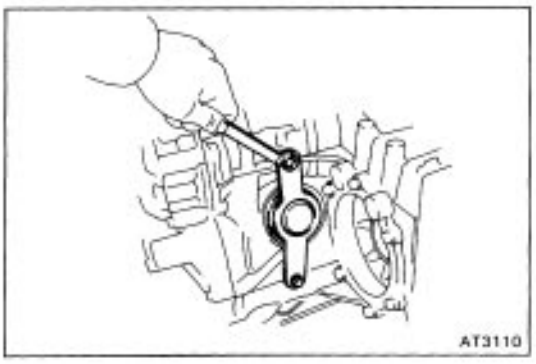

5. REMOVE GOVERNOR BODY

(a) Remove the two bolts and cover bracket.

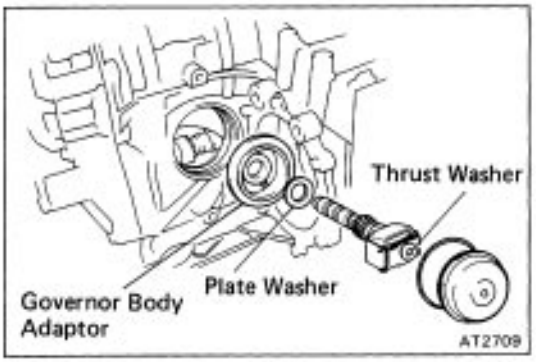

(b) Remove the governor cover.

(c) Remove the governor body and thrust washer.

(d) Remove the plate washer and governor body adaptor.

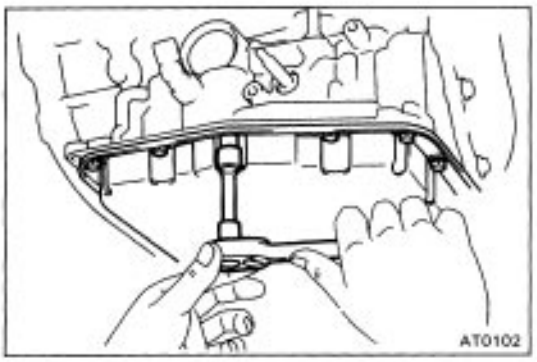

6. REMOVE OIL PAN AND GASKET

(a) Remove the fifteen bolts.

(b) Remove the oil pan by lifting transmission case.

NOTICE: Do not turn the transmission over as this will contaminate the valve body with the foreign materials in the bottom of the oil pan.

(c) Place the transmission on wooden blocks to prevent damage to the tube bracket.

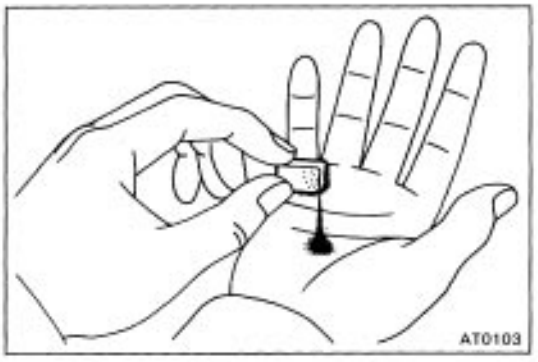

7. EXAMINE PARTICLES IN PAN

Remove the three magnets and use it to collect any steel chips. Look carefully at the chips and particles in the oil pan and on the magnet to anticipate what type of wear you will find in the transmission:

Steel (magnetic) ..... bearing, gear and plate wear

Brass (non–magnetic) ..... bushing wear

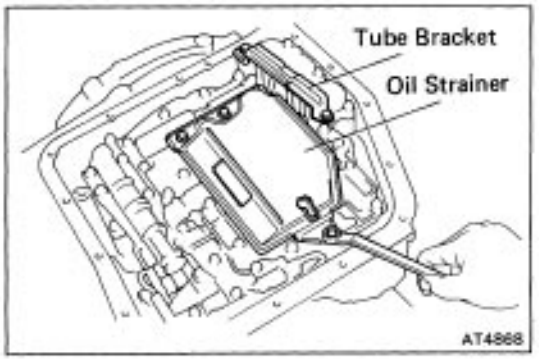

8. REMOVE TUBE BRACKET AND OIL STRAINER

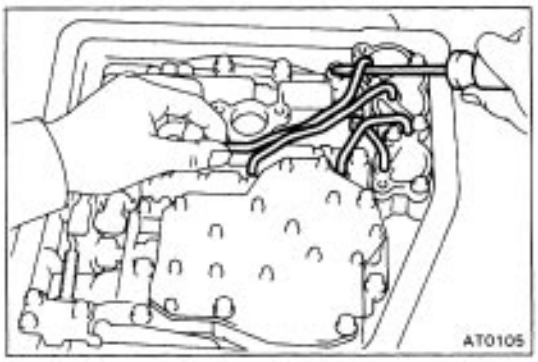

9. REMOVE OIL TUBES

Pry up both tube ends with a large screwdriver and remove the four tubes.

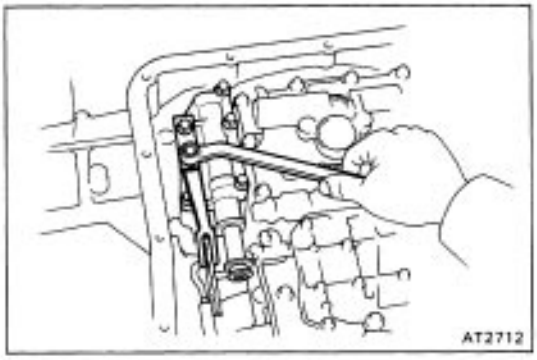

10. REMOVE MANUAL VALVE BODY

(a) Remove the two bolts and detent spring.

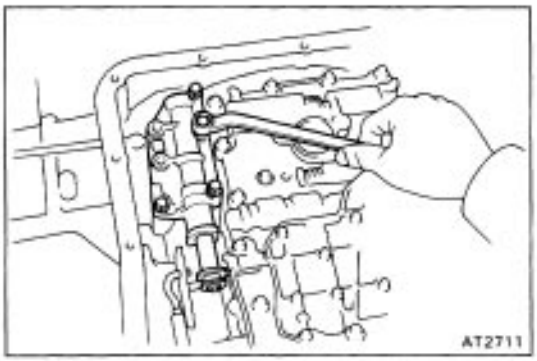

(b) Remove the four bolts and manual valve body with the manual valve.

(c) Remove the manual valve from the manual valve body.

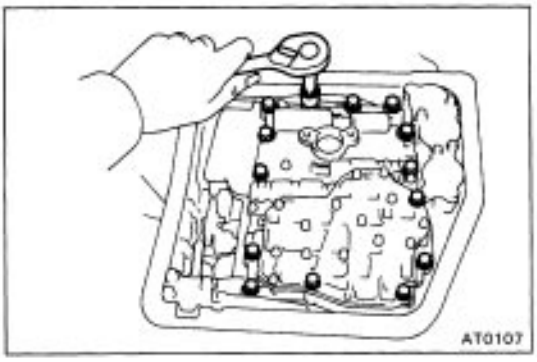

11. REMOVE VALVE BODY

(a) Remove the fourteen bolts.



(b) Disconnect the throttle cable from the cam.

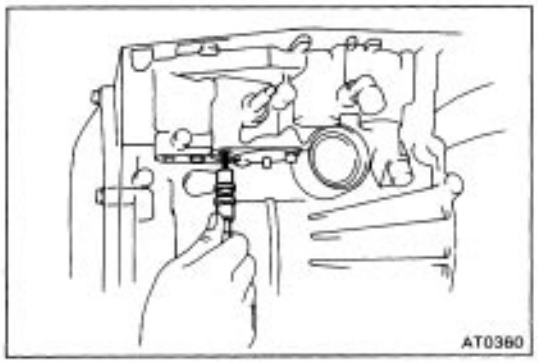

12. REMOVE THROTTLE CABLE FROM CASE

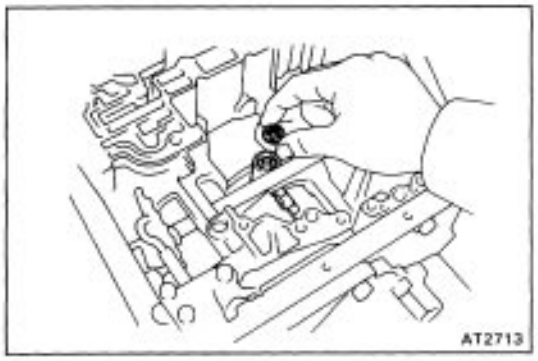

13. REMOVE SECOND BRAKE APPLY GASKET (GOVERNOR APPLY GASKET)

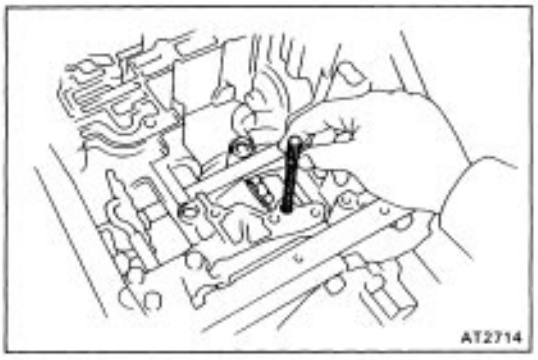

14. REMOVE GOVERNOR OIL STRAINER

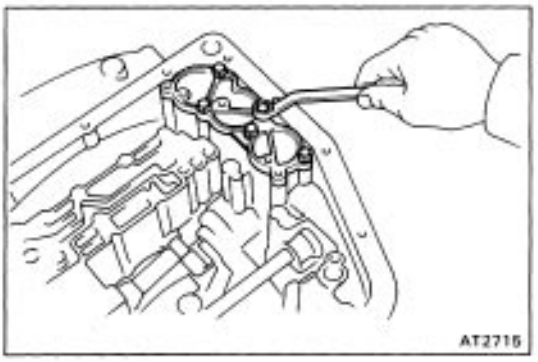

15. REMOVE ACCUMULATOR PISTON AND SPRINGS

(a) Loosen the five bolts one turn at a time until the spring tension is released.

(b) Remove the cover and gasket.

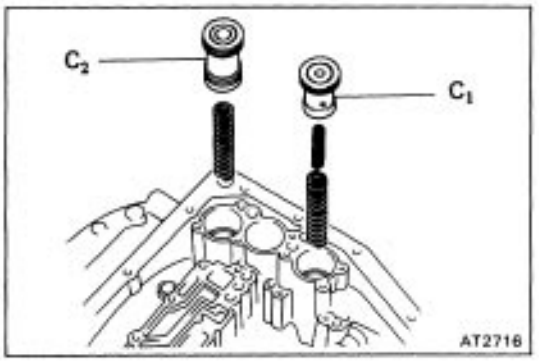

(c) Remove the piston and spring for C1 and C2.

(d) Remove the O–rings.

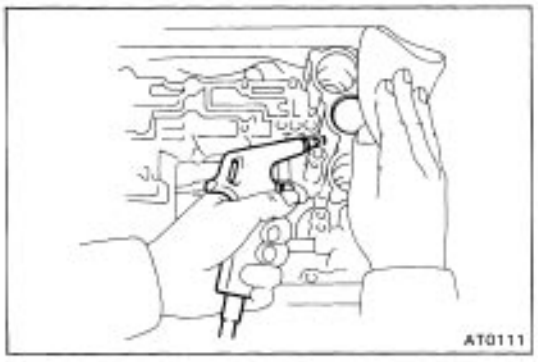

(e) Pop out piston B2 into a rag, using low– pressure compressed air (1 kg/cm2, 14 psi or 98 kPa). Force air into the hole shown and remove the piston and spring.
(f) Remove the two O–rings from the B2 piston.

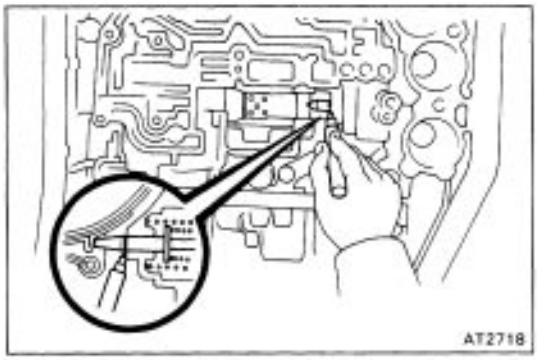

16. MEASURE PISTON STROKE OF SECOND COAST BRAKE

(a) Apply a small amount of paint to the piston rod at the point it meets the case as shown in the illustration.

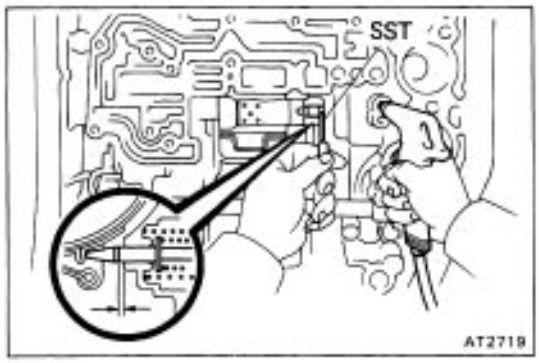

(b) Using SST, measure the piston stroke applying and releasing the .compressed air (4 – 8 kg/cm2, 57 – 114 psi or 392 – 785 kPa) as shown.
SST 09240–00020
Piston stroke: 1.5 – 3.0 mm (0.059 – 0.118 in.)
If the piston stroke exceeds the limit, inspect the brake band.

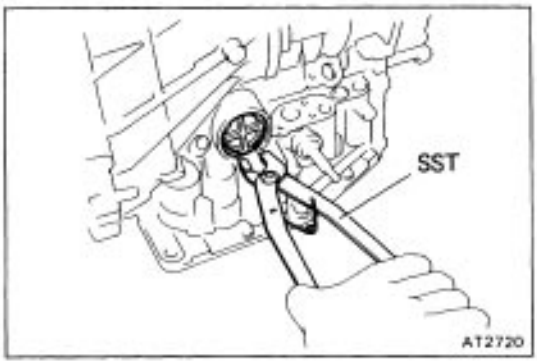

17. REMOVE SECOND COAST BRAKE PISTON

(a) Using SST, remove the snap ring.
SST 09350–32014 (09351–32050)

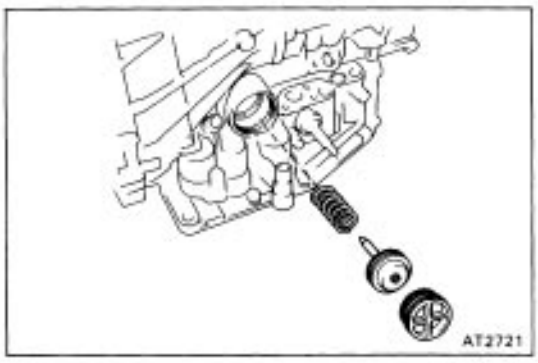

(b) Remove the cover.
(c) Remove the piston and outer return spring.
(d) Remove the O–ring from the cover.

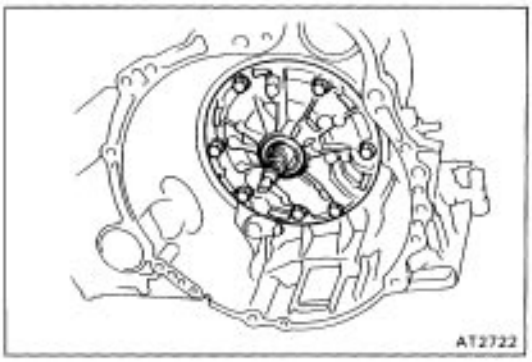

18. REMOVE OIL PUMP AND DIRECT CLUTCH

NOTICE: Before removing the oil pump, remove the second coast brake piston.

(a) Remove the seven bolts.

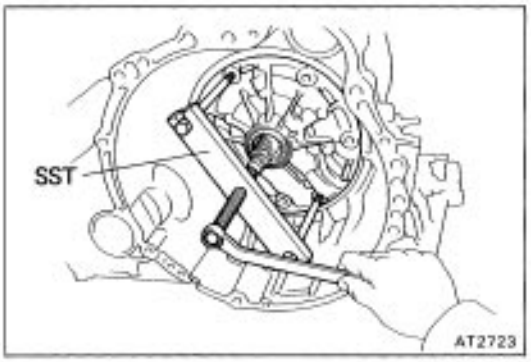

(b) Using SST, pull out the oil pump from the transmission case.
SST 09350–32014 (09351–32061)

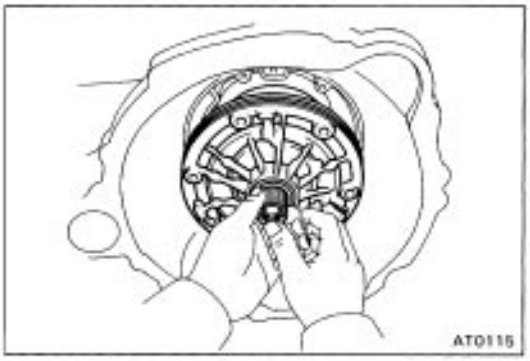

(c) While holding the input shaft, grasp the pump stator shaft and pull the oil pump and direct clutch together out of the transmission case.

HINT: Push the 2nd coast brake band into the case, being careful not to catch it on the direct clutch drum.

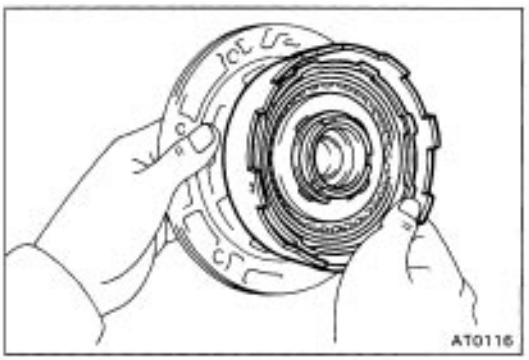

19. REMOVE DIRECT CLUTCH FROM OIL PUMP

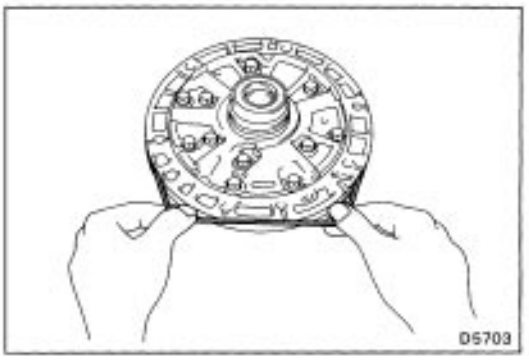

20. REMOVE O–RING FROM' OIL PUMP

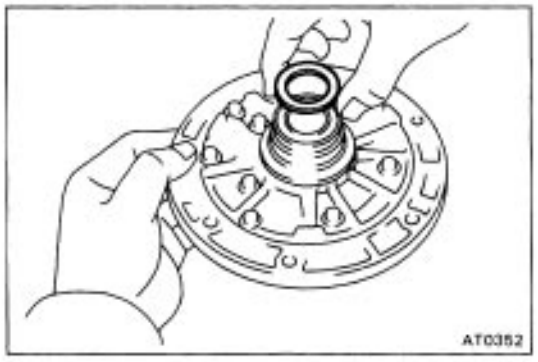

21. REMOVE BEARING RACE

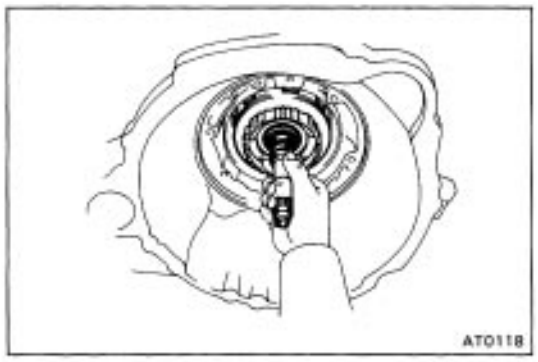

22. REMOVE FORWARD CLUTCH

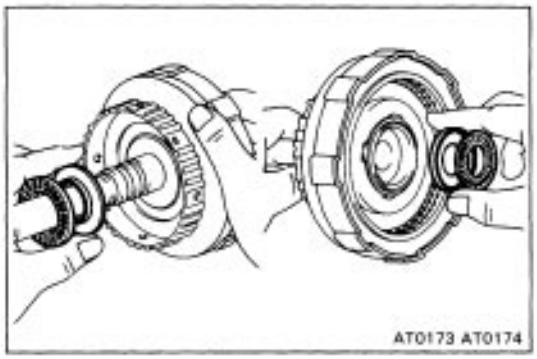

23. REMOVE BEARINGS AND RACES

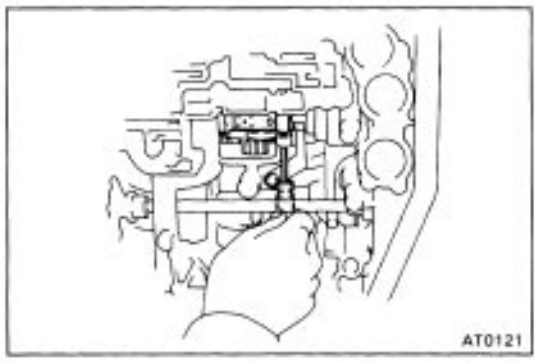

24. REMOVE SECOND COAST BRAKE BAND

(a) Push the pin with a small screwdriver and remove it from the bolt hole of the oil pump mounting.
(b) Remove the brake band.

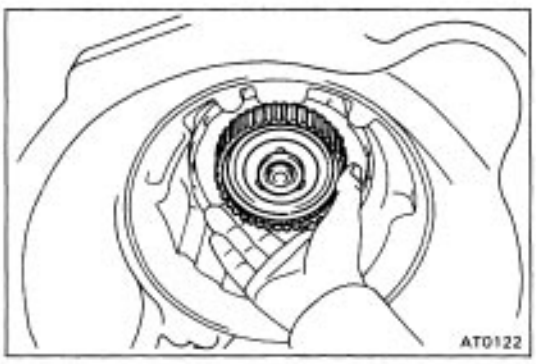

25. REMOVE FRONT PLANETARY RING GEAR

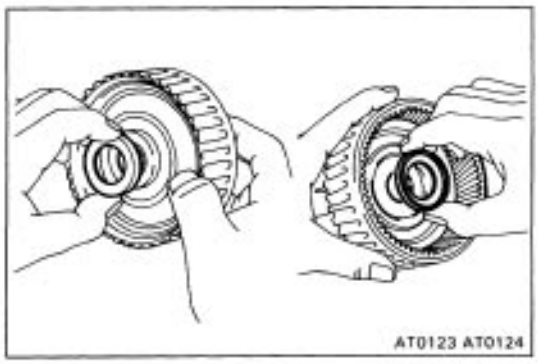

26. REMOVE BEARING RACES

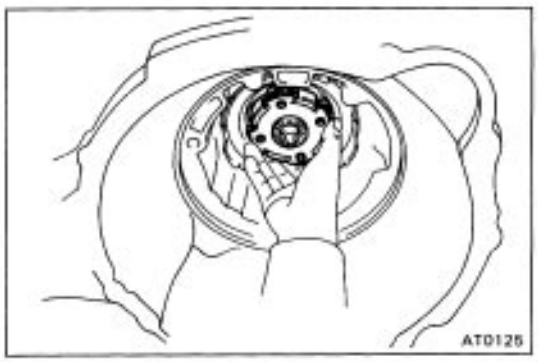

27. REMOVE PLANETARY GEAR

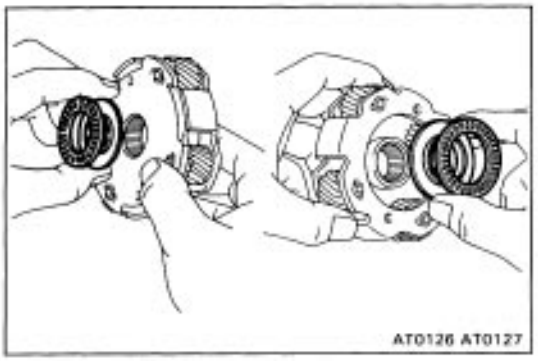

28. REMOVE BEARINGS AND RACES

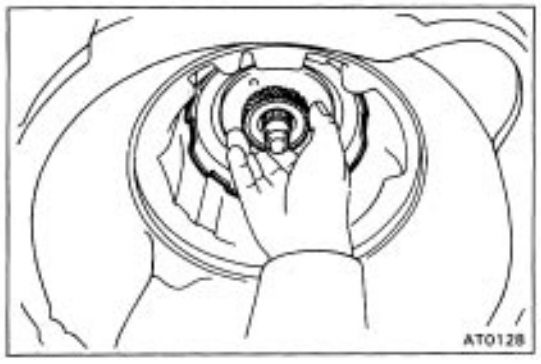

29. REMOVE SUN GEAR, SUN GEAR INPUT DRUM, SECOND BRAKE HUB AND NO.1 ONE–WAY CLUTCH

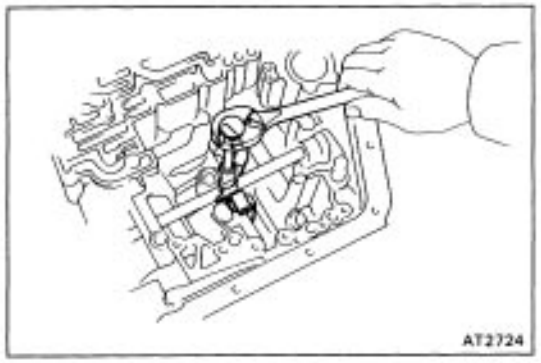

30. STAND TRANSMISSION CASE UP AND REMOVE SECOND COAST BRAKE BAND GUIDE

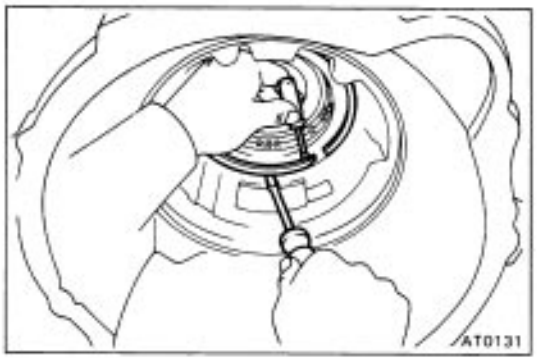

31. REMOVE SNAP RING HOLDING SECOND BRAKE DRUM TO CASE

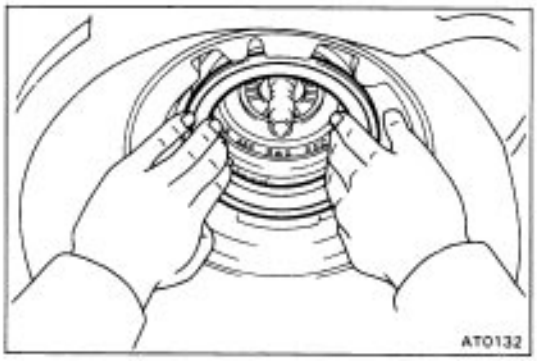

32. REMOVE SECOND BRAKE DRUM

If the brake drum is difficult to remove, lightly tap it with a wooden block.

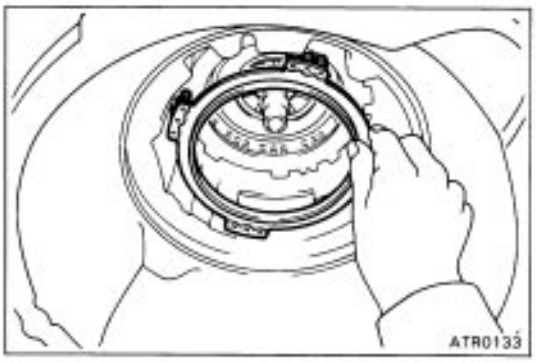

33. REMOVE SECOND BRAKE PISTON RETURN SPRING

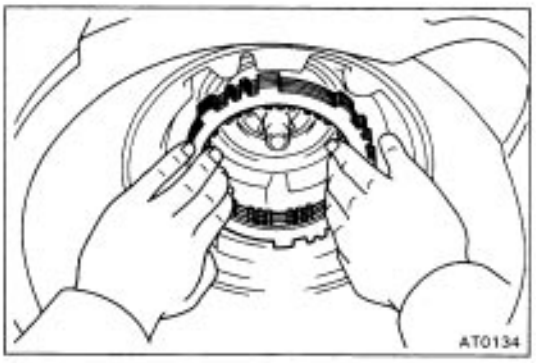

34. REMOVE PLATES, DISCS AND FLANGE

HINT: For the method of inspection, refer to AT–139.

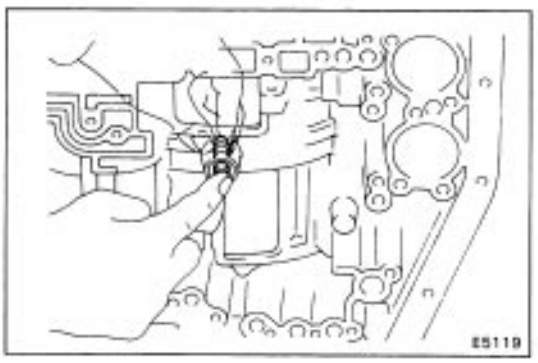

35. REMOVE SECOND BRAKE DRUM GASKET

Remove the gasket.

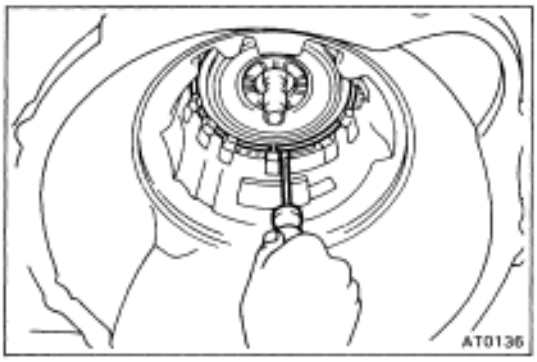

36. REMOVE SNAP RING HOLDING NO.2 ONE–WAY CLUTCH OUTER RACE TO CASE

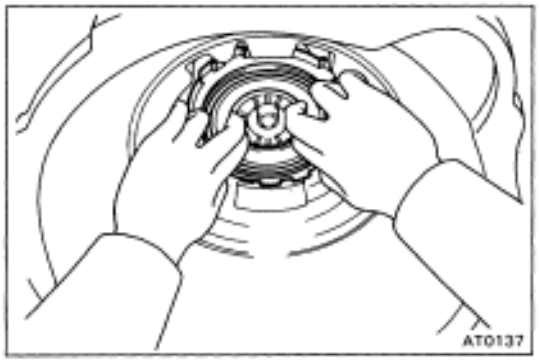

37. REMOVE NO.2 ONE–WAY CLUTCH AND REAR PLANETARY GEAR

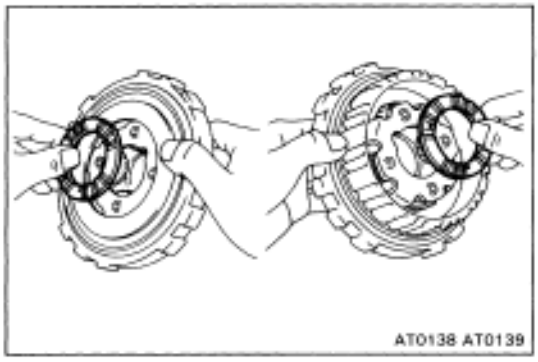

38. REMOVE THRUST WASHERS OF PLANETARY CARRIER FROM BOTH SIDES

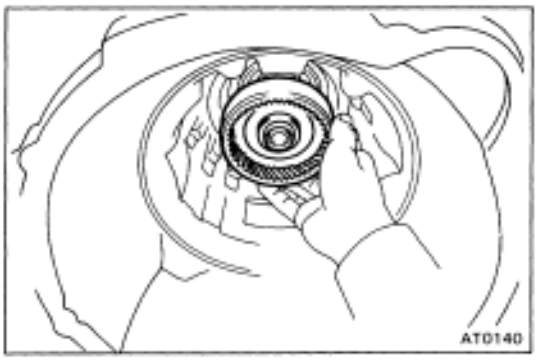

39. REMOVE REAR PLANETARY RING GEAR

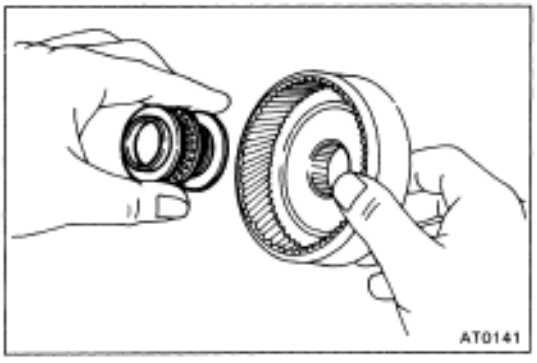

40. REMOVE BEARINGS AND RACES

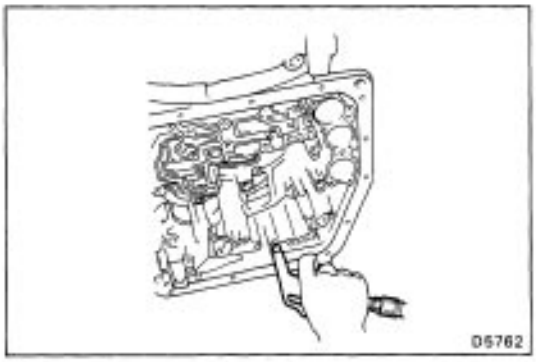

41. CHECK OPERATION OF FIRST AND REVERSE BRAKE PISTON

Apply compressed air into the case passage and confirm that the piston moves.

If the piston does not move, disassemble and inspect.

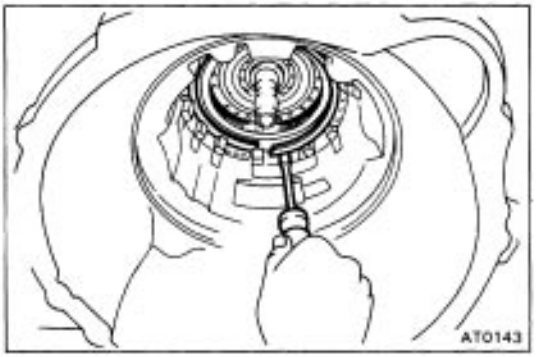

42. REMOVE SNAP RING HOLDING FLANGE TO CASE

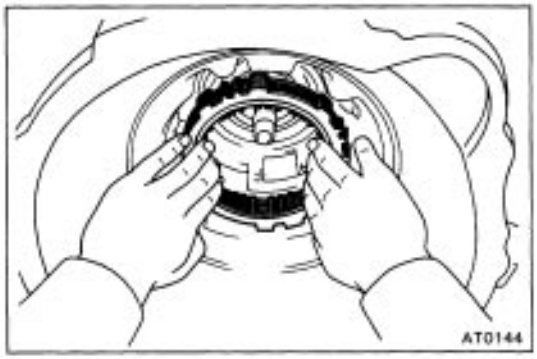

43. REMOVE FLANGES, PLATES AND DISCS

HINT: For the method of inspection, refer to AT–142.

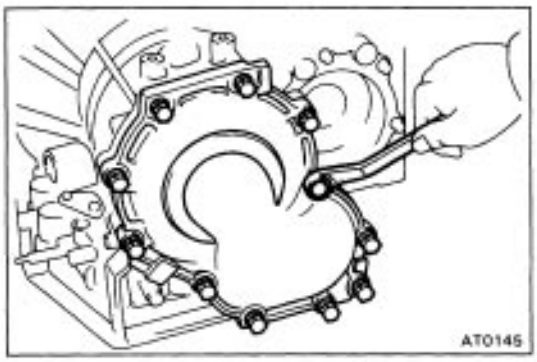

44. TURN TRANSMISSION CASE AROUND

45. REMOVE TRANSAXLE REAR COVER, INTERMEDIATE SHAFT AND GASKET

(a) Remove the eleven bolts.

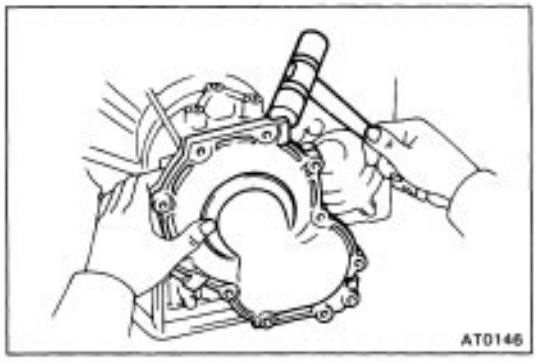

(b) Tap on the circumference of the cover with a plastic hammer to remove the cover from the transaxle case.

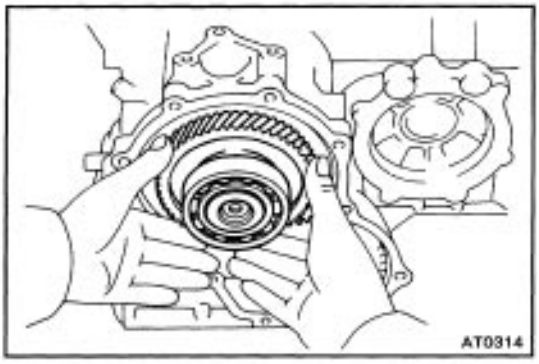

(c) Remove the intermediate shaft which remains in the transmission.

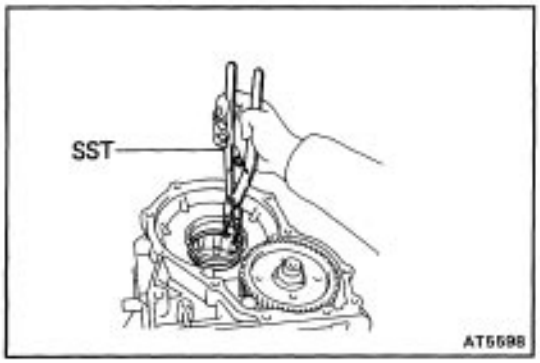

46. REMOVE SNAP RING

Using SST, remove the snap ring.
SST 09350–32014 (09351–32050)

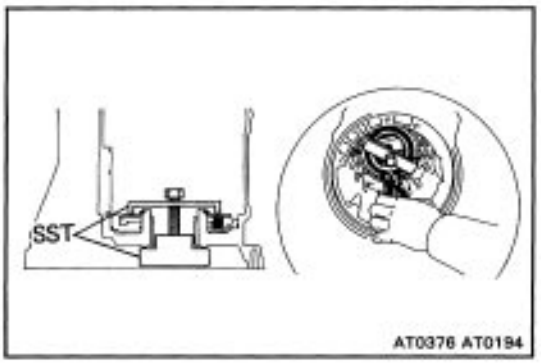

47. REMOVE PISTON RETURN SPRING

(a) Place SST, and compress the return spring evenly by tightening the bolt gradually.
SST 09350–32014 (09351–32040)
(b) Using snap ring pliers, remove the snap ring.
(c) Remove SST.
(d) Remove the return spring from the case.

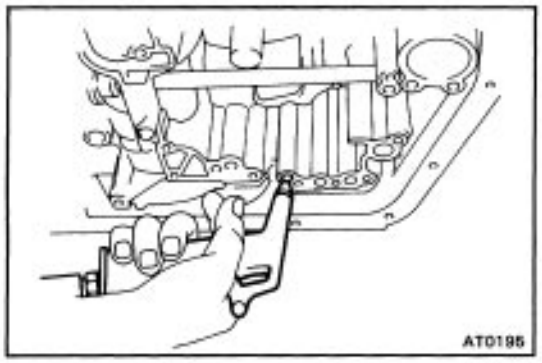

48. REMOVE FIRST AND REVERSE BRAKE PISTON

(a) Apply compressed air into the passage of the case to remove the piston.

HINT: Hold the piston so it is not slanted and blow with the gun slightly away from the oil hole.

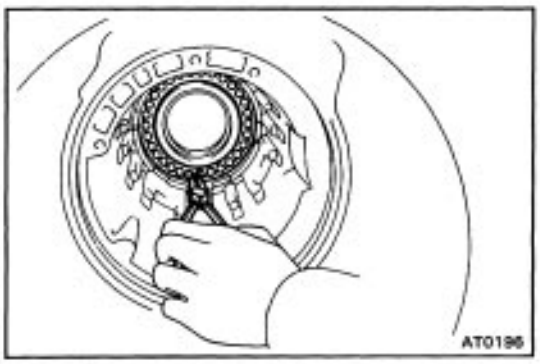

(b) If the piston does not pop out with compressed air, use needle–nose pliers to remove it.

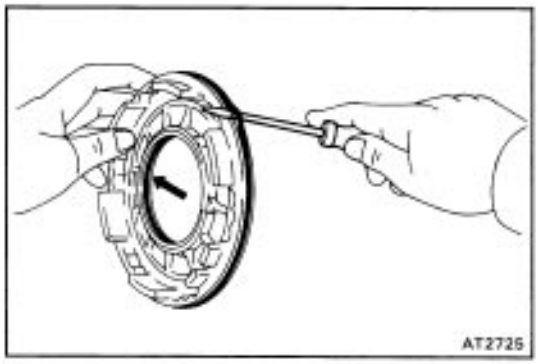

(c) Remove the two O–rings from the piston.

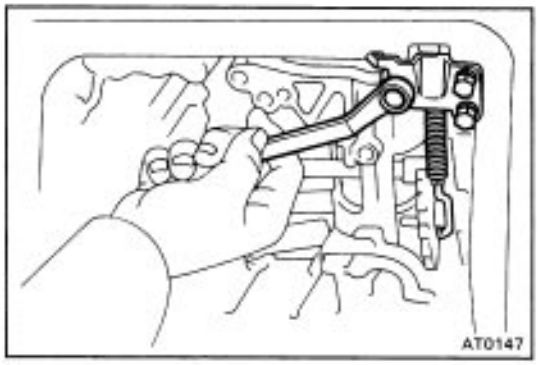

49. REMOVE PARKING LOCK PAWL BRACKET

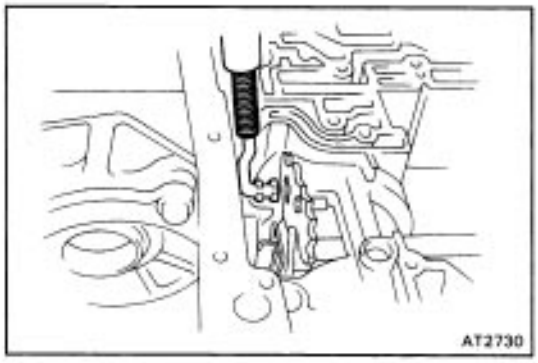

50. REMOVE PARKING LOCK ROD

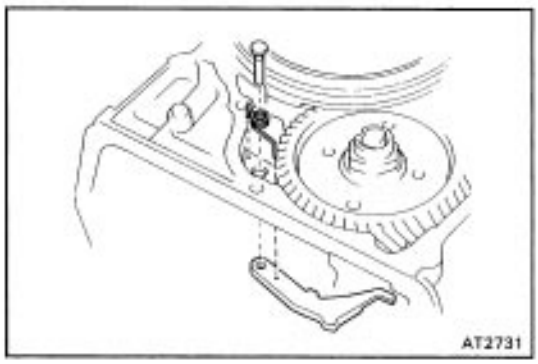

51. REMOVE PIN, SPRING AND PARKING LOCK PAWL

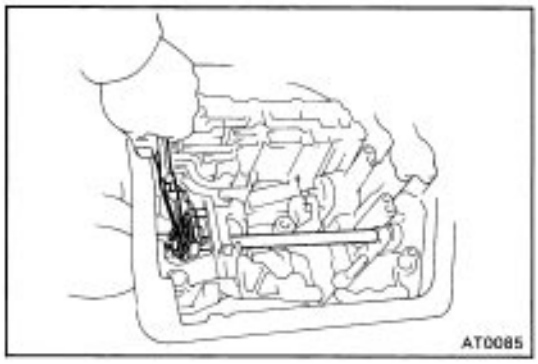

52. REMOVE MANUAL VALVE SHAFT

(a) Remove the retaining spring.

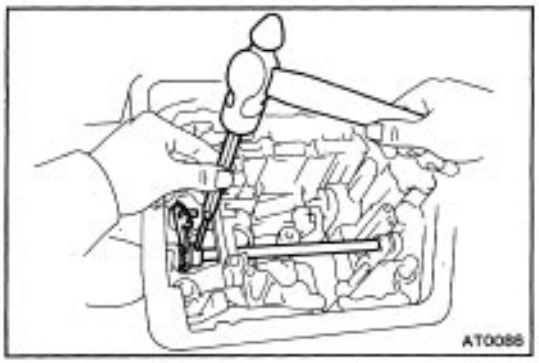

(b) Using a hammer and chisel, pry and turn the collar.
(c) Using a hammer and punch, drive out the pin.

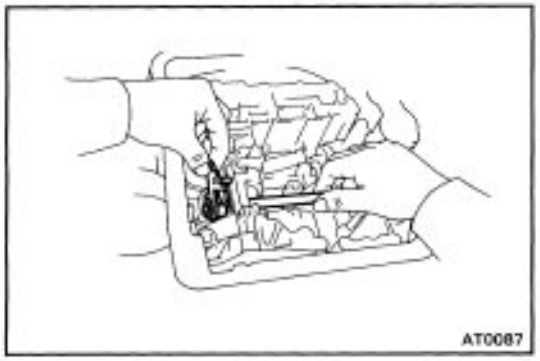

(d) Slide out the shaft and remove the manual valve lever from the case.

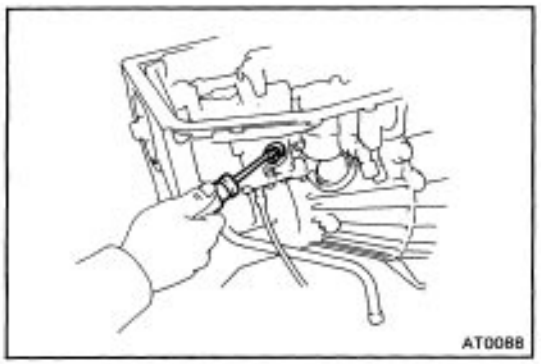

53. REMOVE MANUAL SHAFT OIL SEAL

Remove the oil seal with a screwdriver.

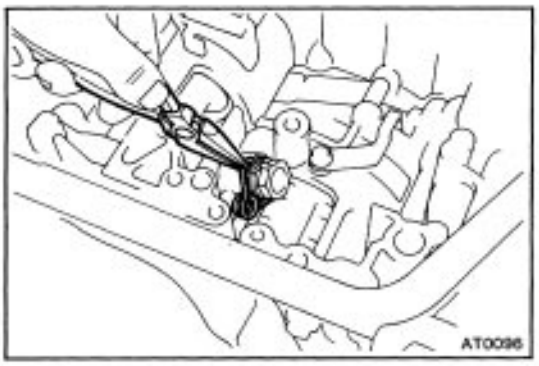

54. REMOVE GOVERNOR PRESSURE ADAPTOR

(a) Remove the torsion spring with long nose pliers.

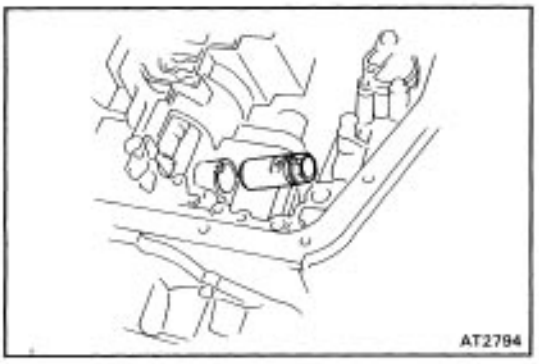

(b) Remove the governor pressure adaptor from the case.

REMOVAL OF COMPONENT PARTS (A240L)

COMPONENTS

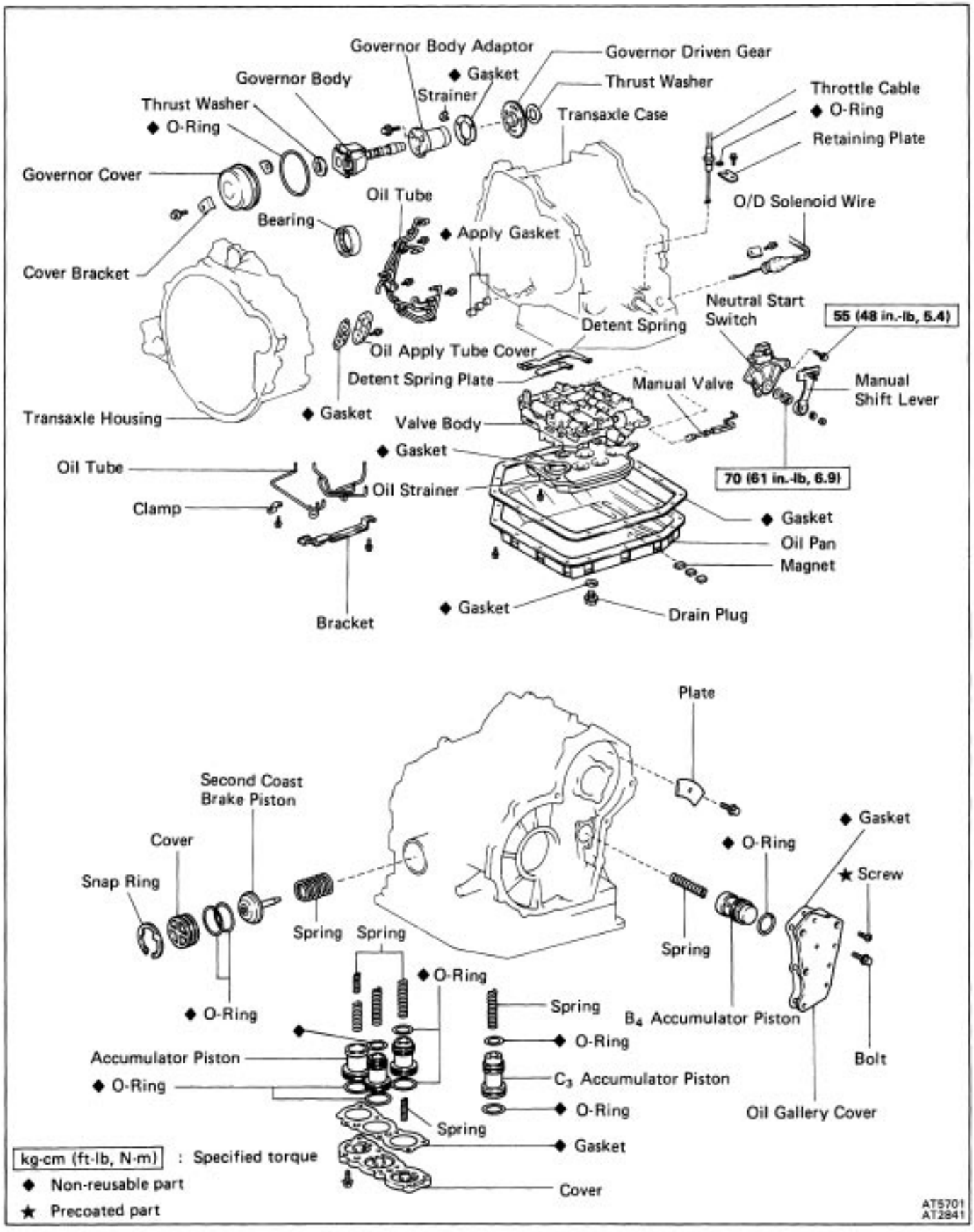

COMPONENTS (Cont'd)

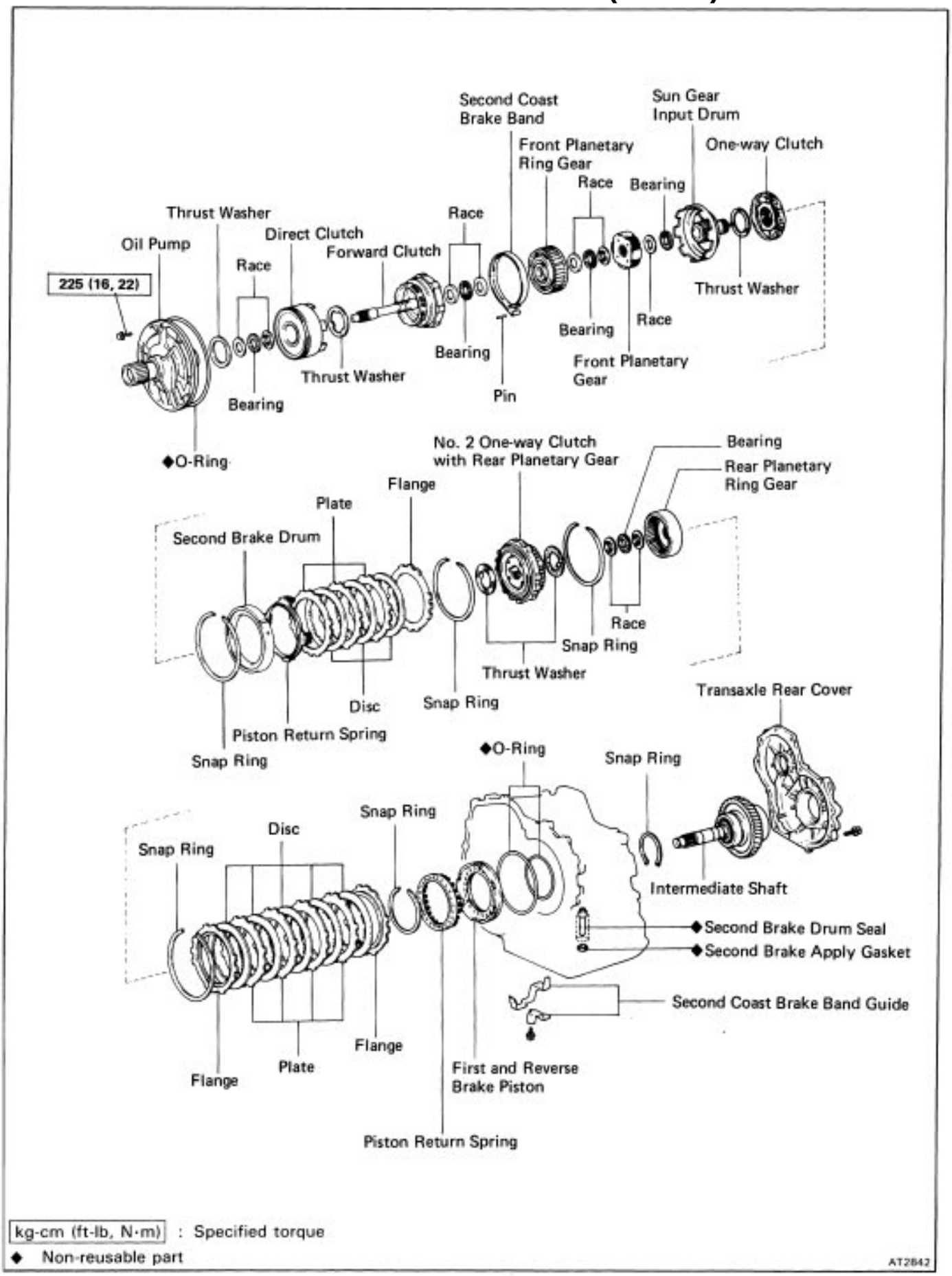

kg-cm (ft-lb, N·m) : Specified torque

◆ Non-reusable part

AT2842

COMPONENTS (Cont'd)

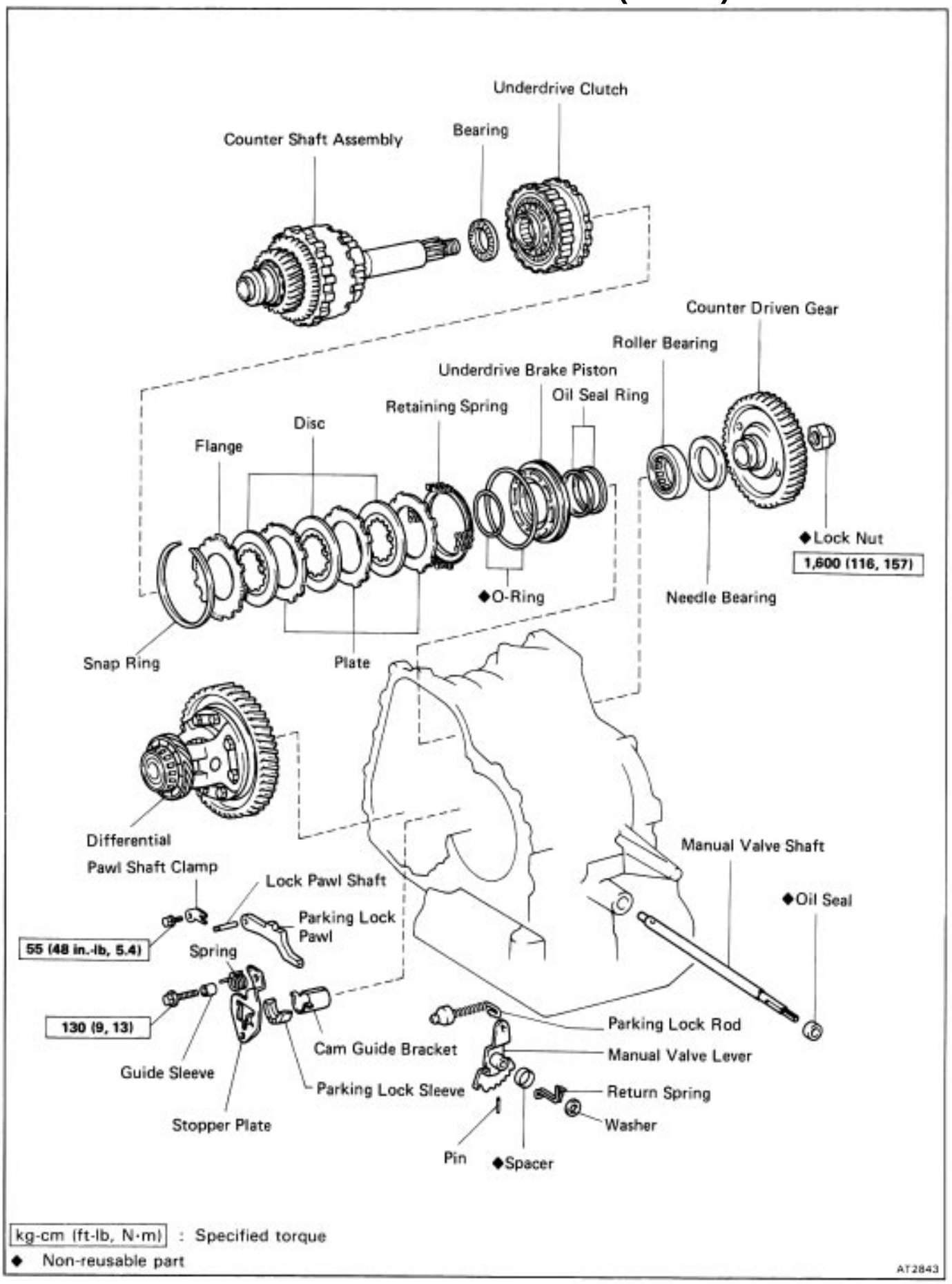

SEPARATE BASIC SUBASSEMBLY

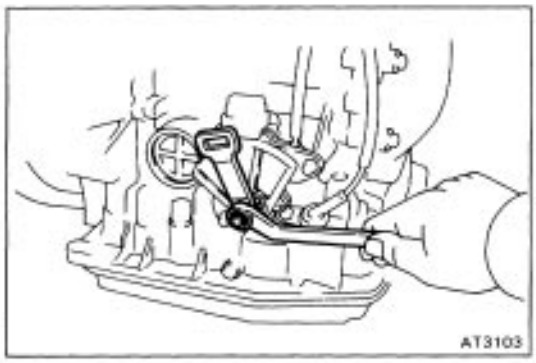

1. REMOVE MANUAL SHIFT LEVER

Remove the nut, washer and manual shift lever.

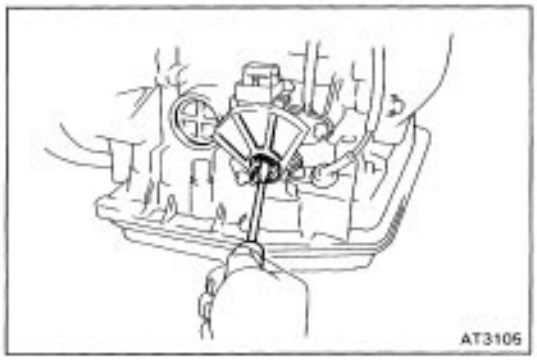

2. REMOVE NEUTRAL START SWITCH

(a) Using a screwdriver, unstake the nut stopper.

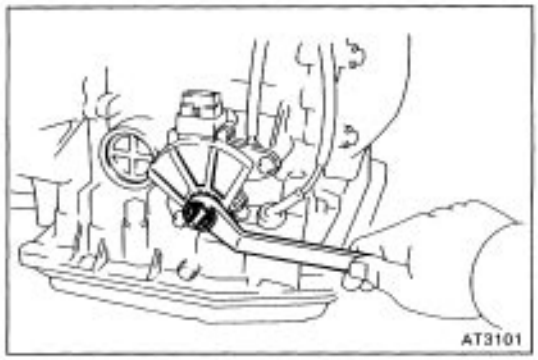

(b) Remove the nut, nut stopper and packing.

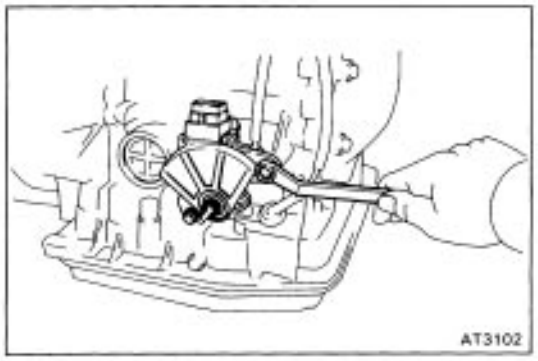

(c) Remove the two bolts and neutral start switch.

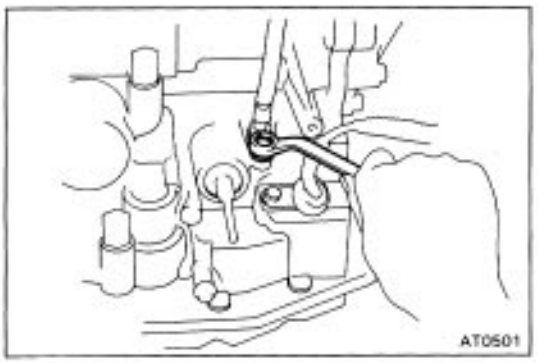

3. REMOVE THROTTLE CABLE RETAINING PLATE

Remove the bolt and plate.

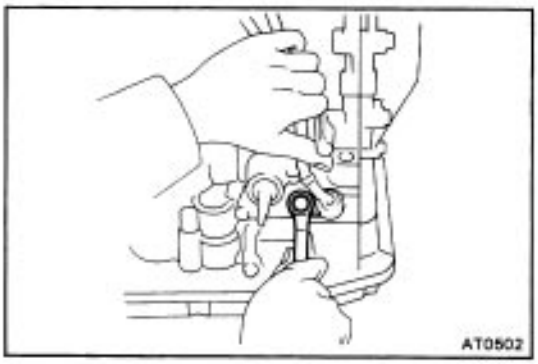

4. REMOVE SOLENOID WIRE RETAINING PLATE

Remove the bolt and plate.

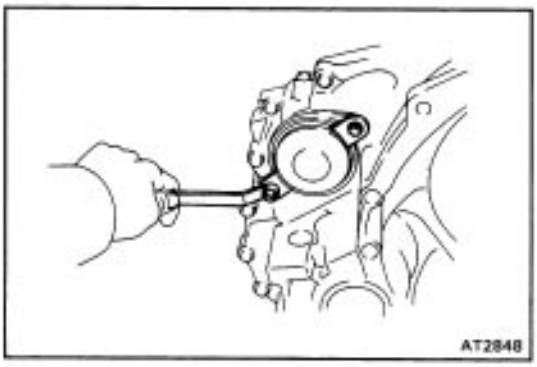

5. REMOVE GOVERNOR BODY

(a) Remove the two bolts and cover brackets.

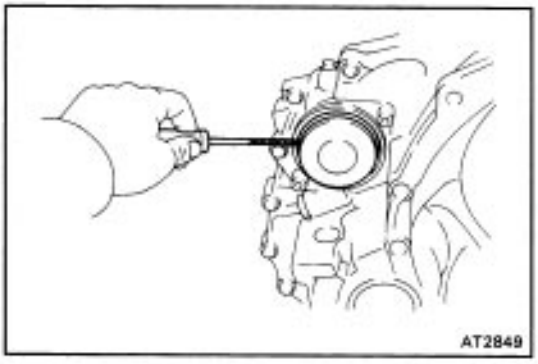

(b) Using a screwdriver, remove the governor cover.

HINT: Tape the screwdriver tip before use so as not to damage the cover or transaxle.

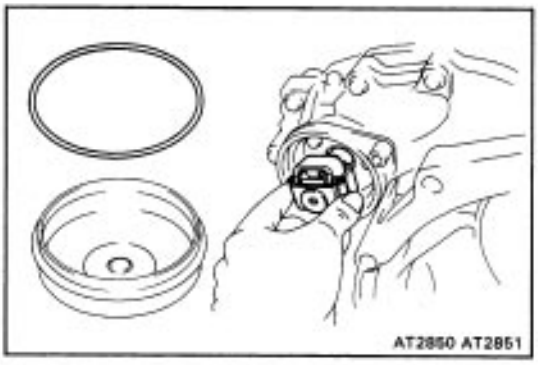

(c) Remove the O–ring from the cover.

(d) Remove the governor body with thrust washer.

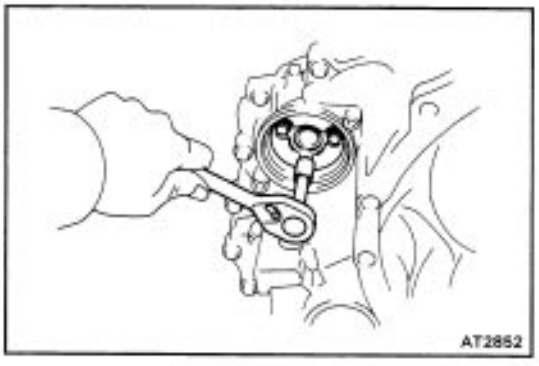

(e) Remove the three bolts and governor body adaptor with gasket.



(f) Remove the governor oil strainer.

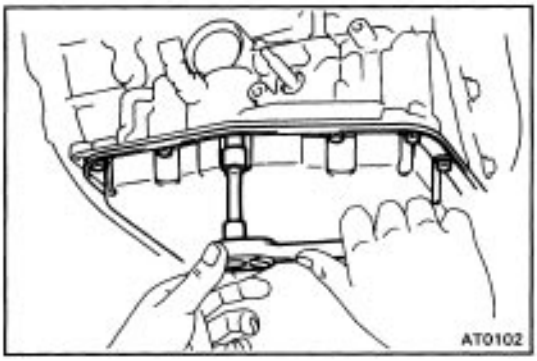

6. REMOVE PAN AND GASKET

(a) Remove the eighteen bolts.

(b) Remove the pan by lifting the transmission case.

NOTICE: Do not turn the transmission over as it will contaminate the valve body with the foreign materials in the bottom of the pan.

(c) Remove the gasket.

(d) Place the transmission on wooden blocks to prevent damage to the pipes.

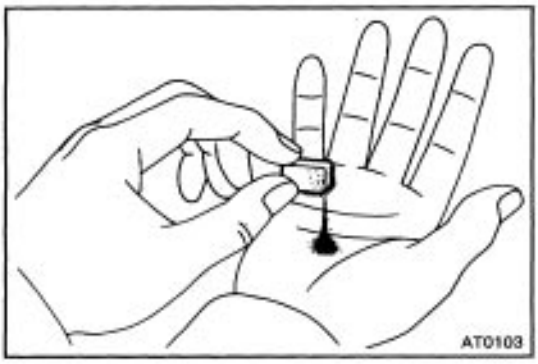

7. EXAMINE PARTICLES IN PAN

Remove the magnets and use them to collect any steel chips. Look carefully at the chips and particles in the pan and on the magnet to anticipate what type of wear you will find in the transmission:

Steel (magnetic) ..... bearing, gear and plate wear

Brass (non–magnetic) ..... bushing wear

8. TURN TRANSMISSION OVER

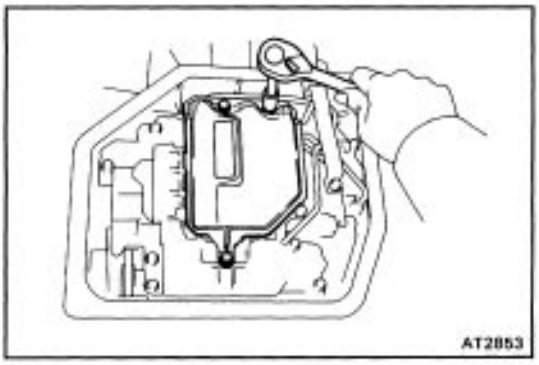

9. REMOVE OIL STRAINER

(a) Remove the three bolts and oil strainer.

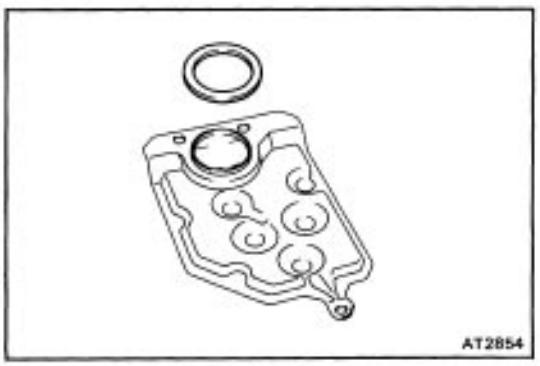

(b) Remove the gasket.

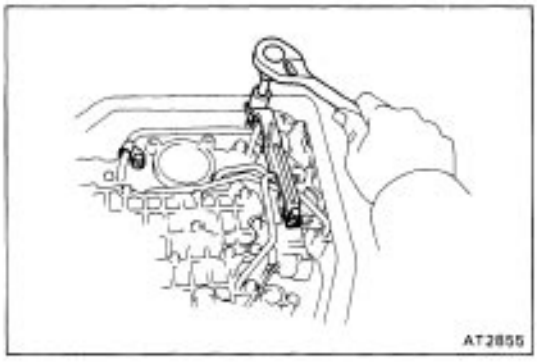

10. REMOVE OIL TUBES

(a) Remove the two bolts and tube bracket.

(b) Remove the tube clamp bolt and clamp.

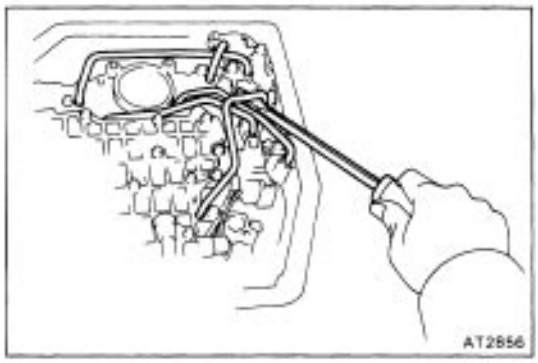

(c) Pry up both ends with a large screwdriver and remove the five tubes.

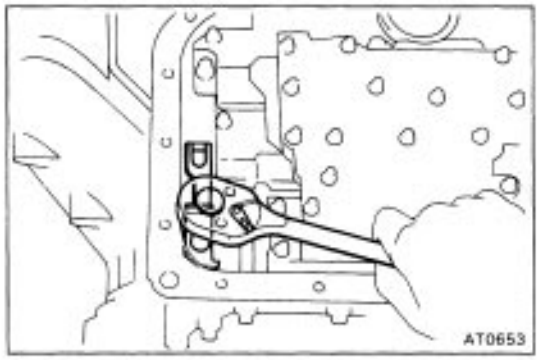

11. REMOVE MANUAL DETENT SPRING

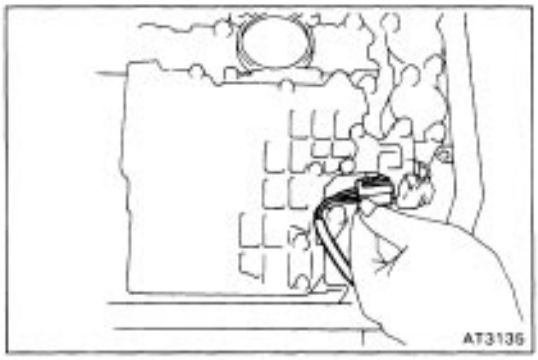

12. DISCONNECT SOLENOID CONNECTOR

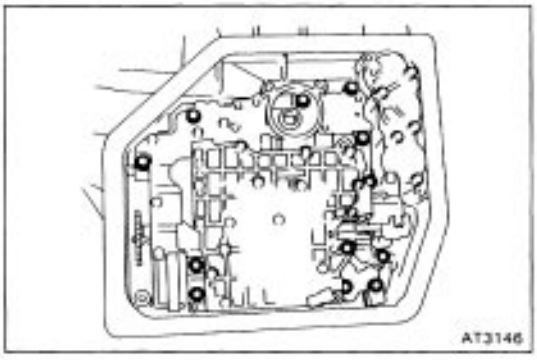

13. REMOVE VALVE BODY

(a) Remove the twelve bolts and wire retainer as shown.



(b) Disconnect the throttle cable from the cam.
(c) While disconnecting the manual valve connecting rod from the manual valve lever, remove the valve body.

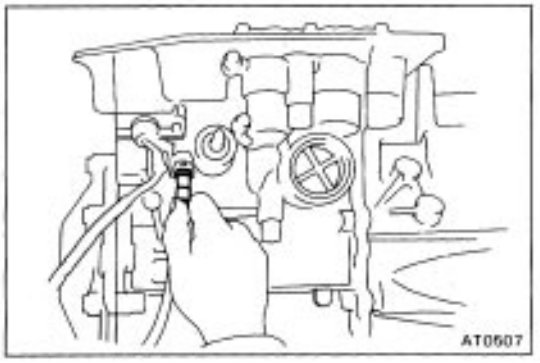

14. REMOVE THROTTLE CABLE FROM CASE

Pull out the throttle cable.

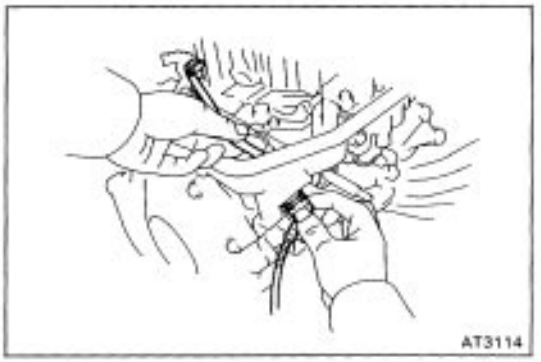

15. REMOVE SOLENOID WIRE

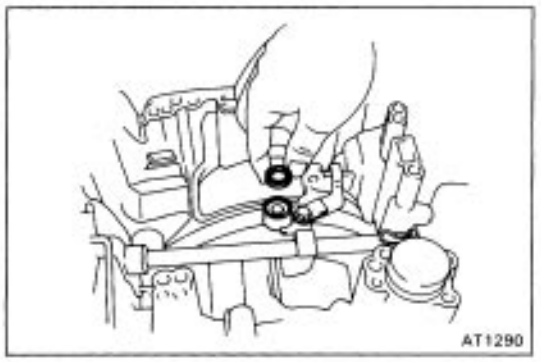

16. REMOVE SECOND BRAKE APPLY GASKET

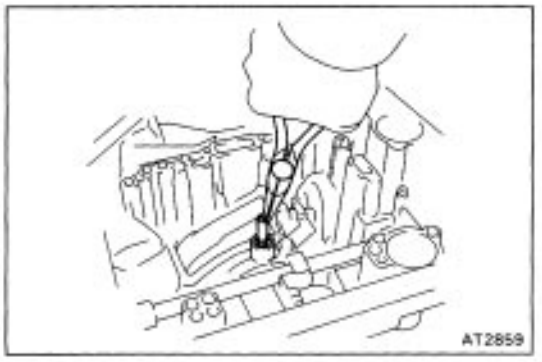

17. REMOVE SECOND BRAKE DRUM SEAL

Using a needle nose pliers, pull out the second brake drum seal.

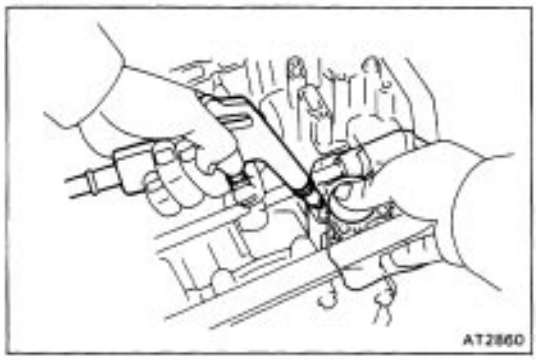

18. REMOVE C3 ACCUMULATOR PISTON AND SPRING

Using low–pressure compressed air(1 kg/cm2, 14 psi or 98 kPa) pop out the piston into a rag. Force air into the hole shown and remove the piston and spring.

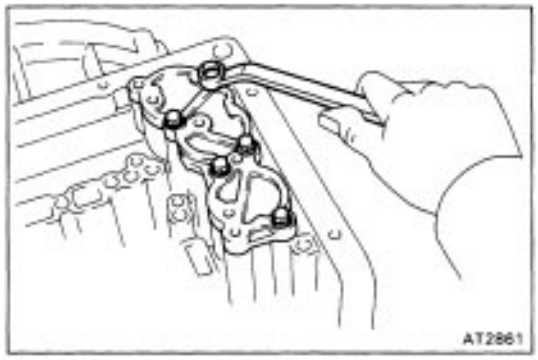

19. REMOVE ACCUMULATOR PISTONS AND SPRINGS

(a) Loosen the five bolts one turn at a time until the spring tension is released.

(b) Remove the cover, gasket and spring on the62 piston.

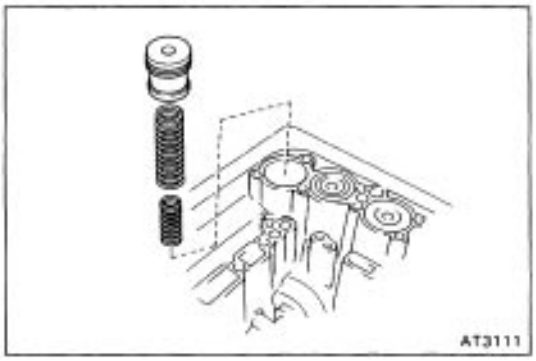

(c) Remove the Cl piston and two springs.

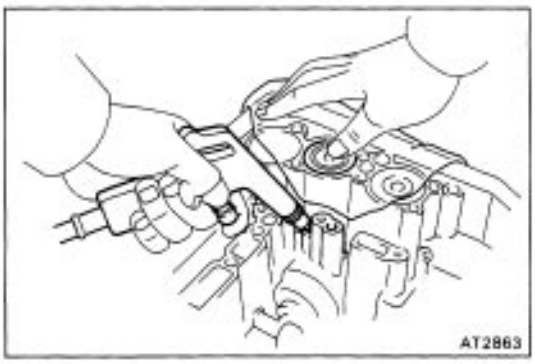

(d) Using low–pressure compressed air (1 kg/cm2, 14 psi, 98 kPa), pop out the C2 piston into a rag. Force air into the hole shown and remove the piston and spring.

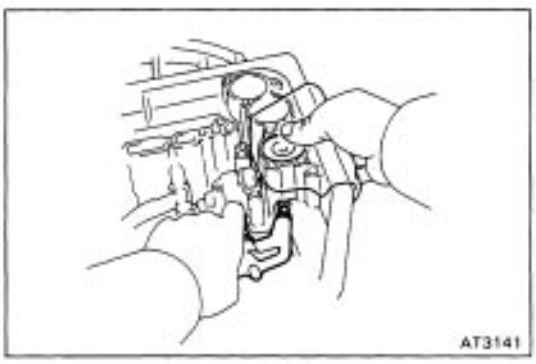

(e) Using low–pressure compressed air (1 kg /cm2, 14 psi, 98 kPa), pop out the B2 piston into a rag. Force air into the hole shown and remove the piston and spring.

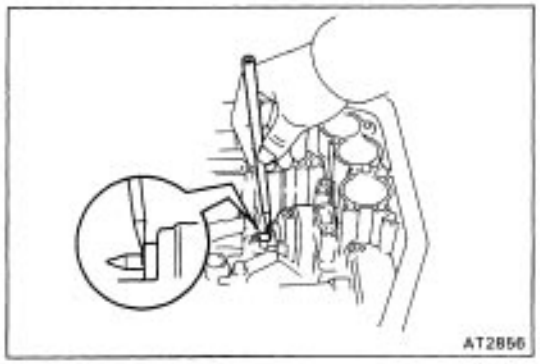

20. MEASURE PISTON STROKE OF SECOND COAST BRAKE

(a) Apply a small amount of paint to the piston rod at the point it meets the case as shown in the illustration.

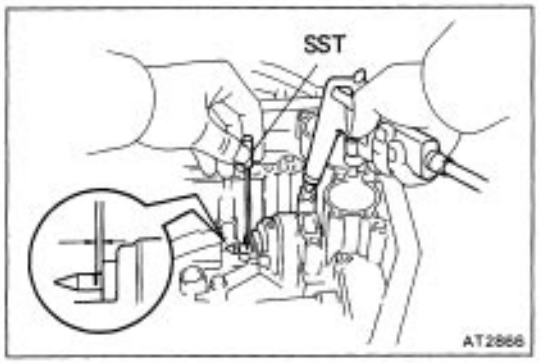

(b) Using SST, measure the piston stroke applying and releasing the compressed air (4 – 8 kg /cm2, 57 – 114 psi, 392 – 785 kPa) as shown.
SST 09240–00020
Piston stroke: 1.5 – 3.0 mm (0.059 – 0.118 in.)

If the piston stroke exceeds the limit, inspect the brake band.

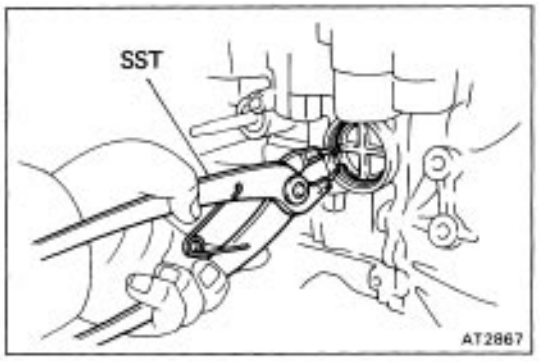

21. REMOVE SECOND COAST BRAKE PISTON

(a) Using SST, remove the snap ring.
SST 09350–32014 (09351–32050)

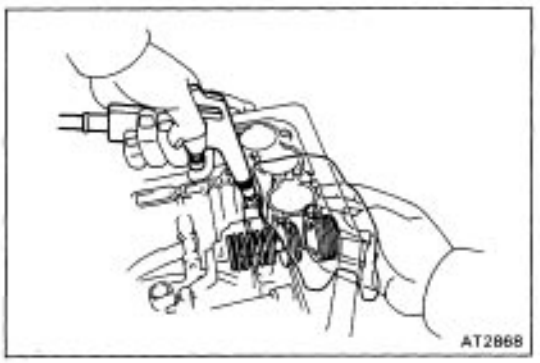

(b) Using low–pressure compressed air (1 kg /cm2, 14psi, 98 kPa), pop out the cover into a rag.
Force air into the hole shown.

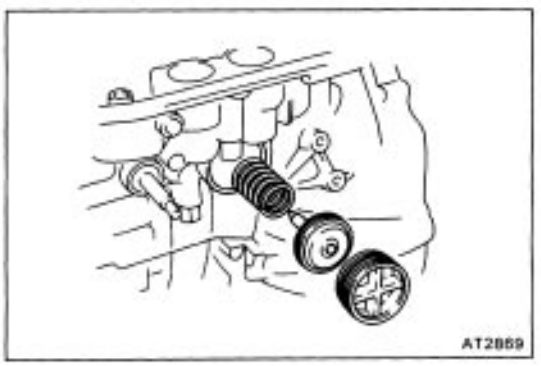

(c) Remove the cover, piston and spring.

(d) Remove the two O–rings from the cover.

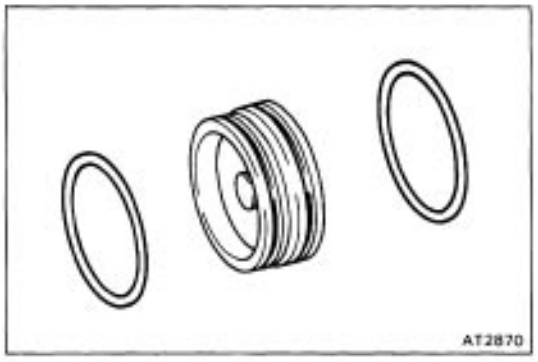

22. REMOVE OIL PUMP

(a) Remove the six bolts holding the oil pump to the transmission case.

(b) Using SST, pull the oil pump free from the transmission case.
SST 09350–32014 (09351–32061)

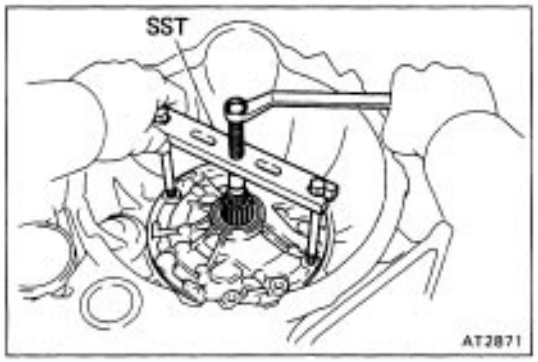

(c) Remove the oil pump with SST.
SST 09350–32014 (09351–32061)

NOTICE: Be careful not to drop or damage the races and bearing behind oil pump.

(d) Remove SST from the oil pump.

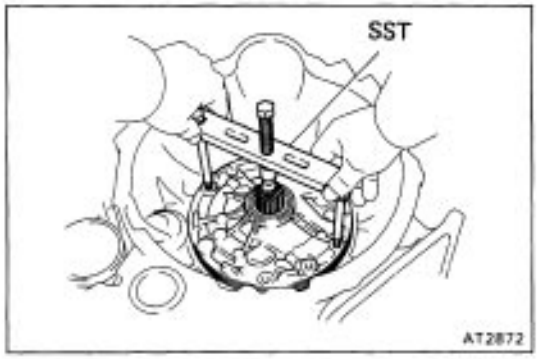

(e) Remove the race from the oil pump.

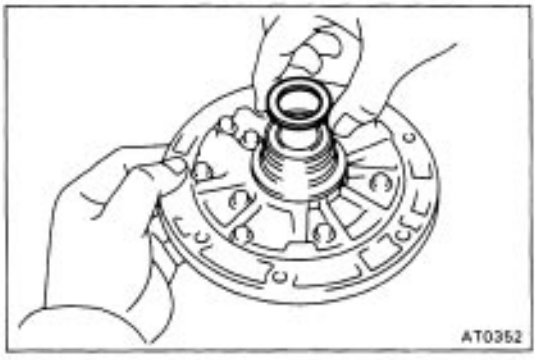

(f) Remove the O–ring from the oil pump.

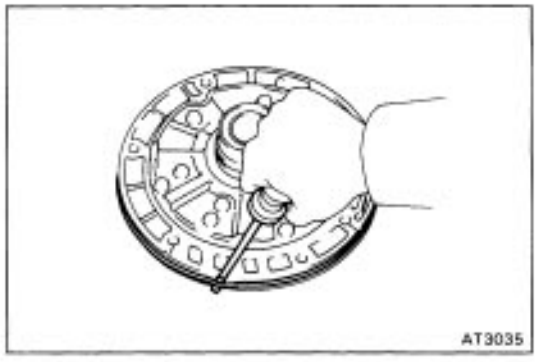

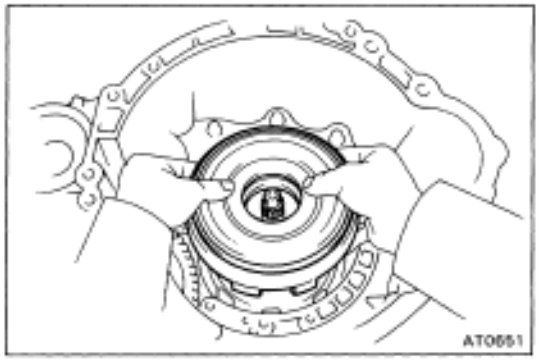

23. REMOVE DIRECT CLUTCH

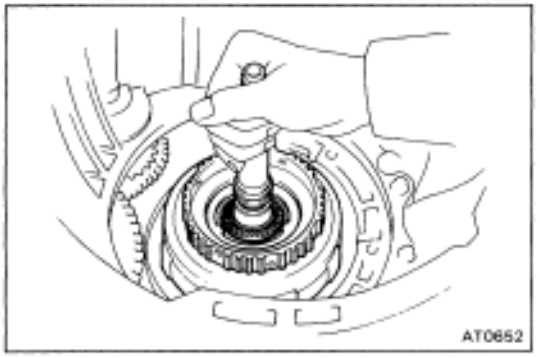

24. REMOVE FORWARD CLUTCH

(a) Remove the forward clutch with bearing and race.

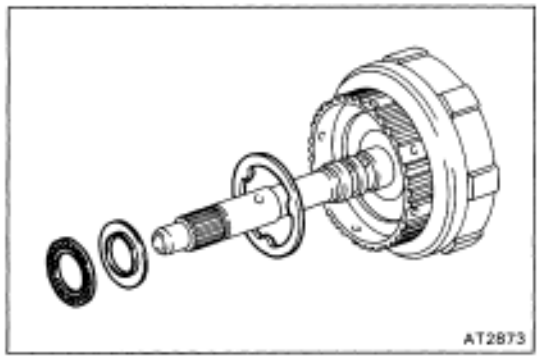

(b) Remove the thrust washer, bearing and races from the forward clutch.

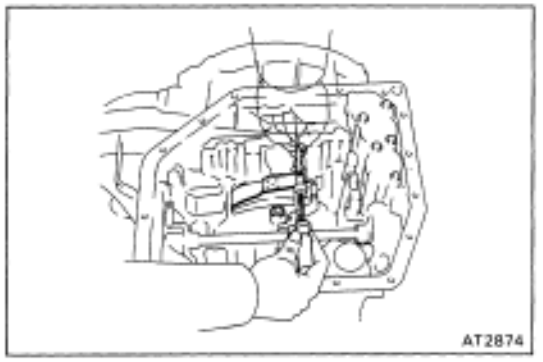

25. REMOVE SECOND COAST BRAKE BAND

(a) Push the pin with a small screwdriver and remove it from the bolt hole of the oil pump mounting.

(b) Remove the brake band.

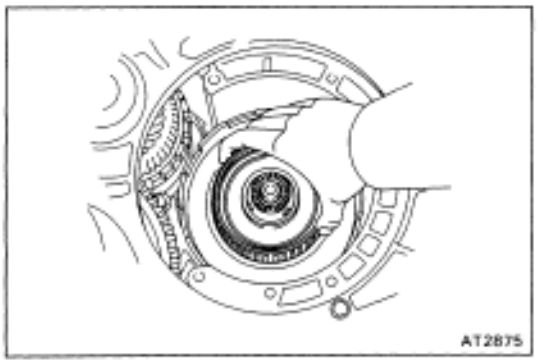

26. REMOVE FRONT PLANETARY RING GEAR

(a) Remove the front planetary ring gear with bearing and race.

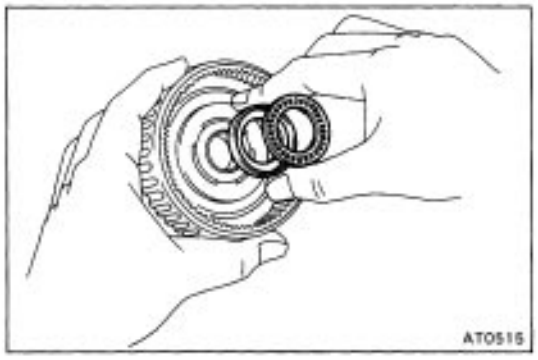

(b) Remove the bearing and race from the ring gear.

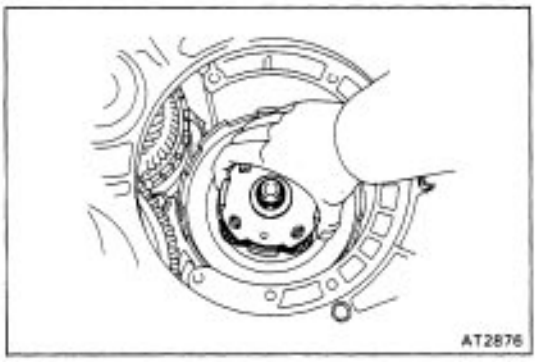

27. REMOVE FRONT PLANETARY GEAR

(a) Remove the front planetary gear with race.

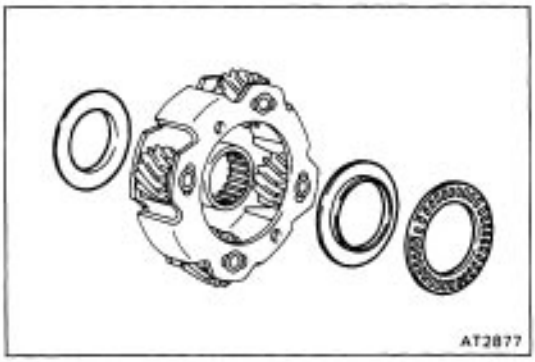

(b) Remove the races and bearing from the planetary gear or sun gear.

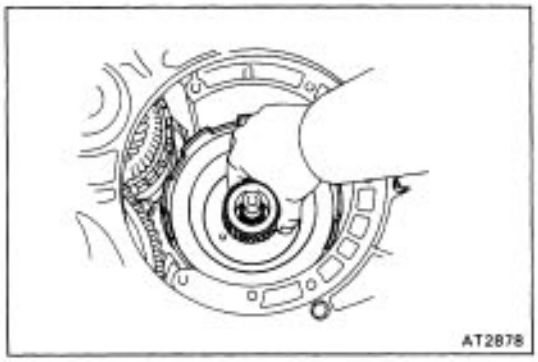

28. REMOVE SUN GEAR, SUN GEAR INPUT DRUM AND THRUST WASHER

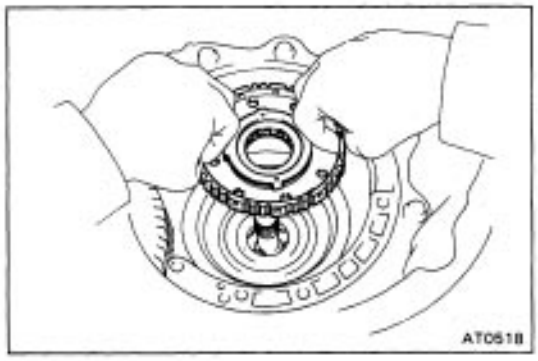

29. REMOVE SECOND BRAKE HUB AND NO. 1 ONE–WAY CLUTCH

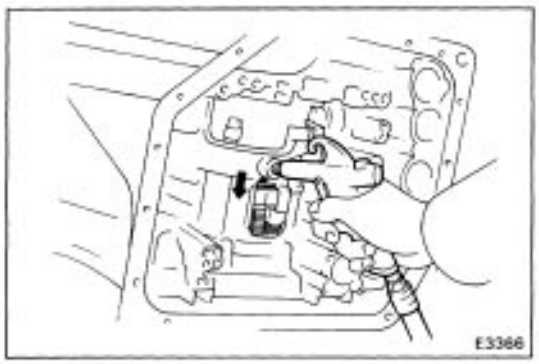

30. CONFIRM THAT SECOND BRAKE PISTON MOVES

Using compressed air, confirm that the second brake piston moves smoothly.

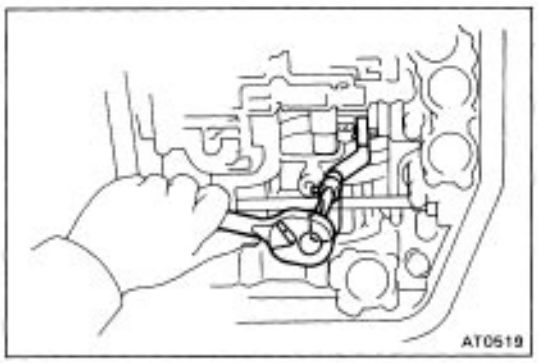

31. REMOVE SECOND COAST BRAKE BAND GUIDE

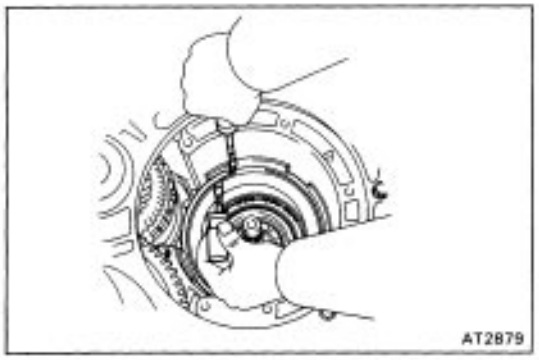

32. REMOVE SNAP RING HOLDING SECOND BRAKE DRUM TO CASE

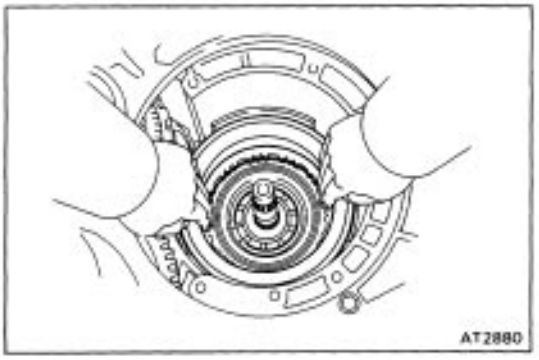

33. REMOVE SECOND BRAKE DRUM

HINT: If the brake drum is difficult to remove, lightly tap it with a wooden block.

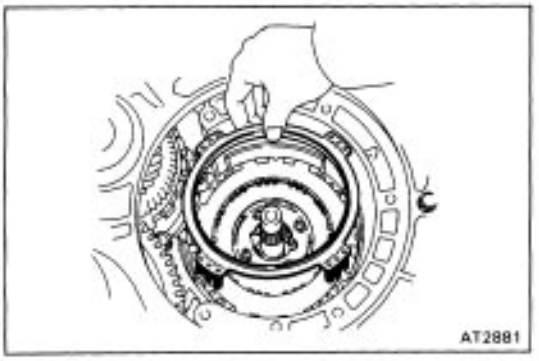

34. REMOVE SECOND BRAKE PISTON RETURN SPRING

(a) Remove the thrust washer.

(b) Remove the return spring.

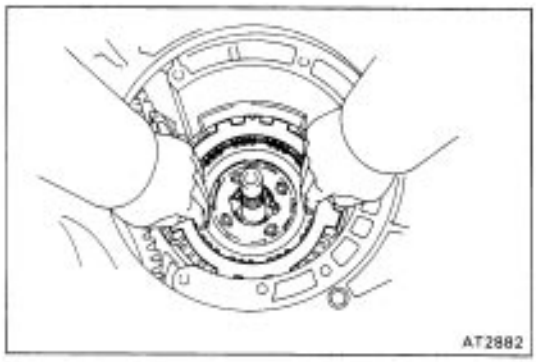

35. REMOVE PLATES, DISCS AND FLANGE

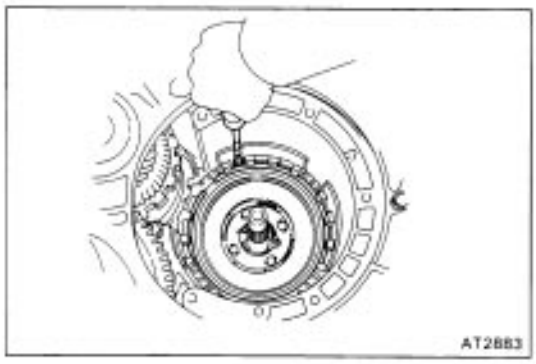

36. REMOVE SNAP RING HOLDING NO.2 ONE–WAY CLUTCH OUTER RACE TO CASE

Using a screwdriver, remove the snap ring.

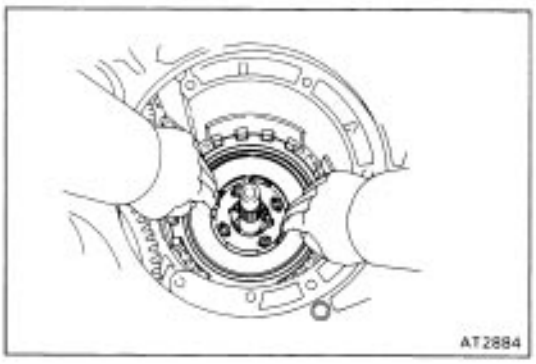

37. REMOVE NO.2 ONE–WAY CLUTCH AND REAR PLANETARY GEAR

(a) Remove the No. 2 one–way clutch and rear planetary gear with thrust washer.

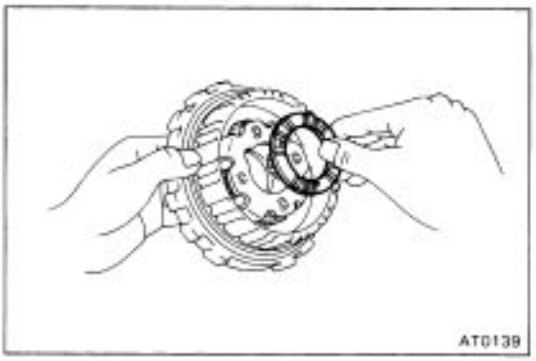

(b) Remove the thrust washer from the gear.

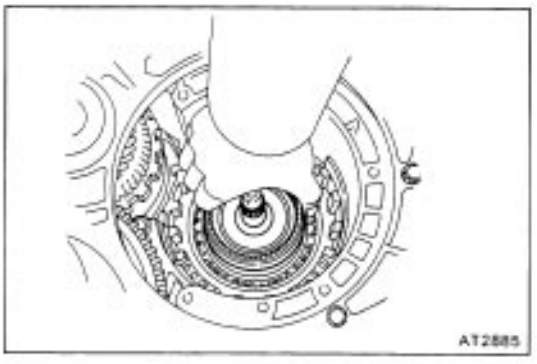

38. REMOVE REAR PLANETARY RING GEAR

(a) Remove the rear planetary ring gear with bearing and races.

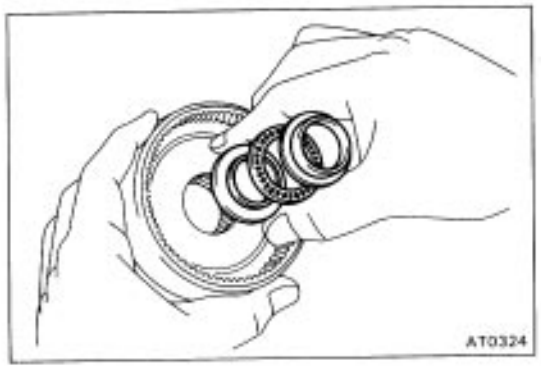

(b) Remove the bearing and races from the ring gear.

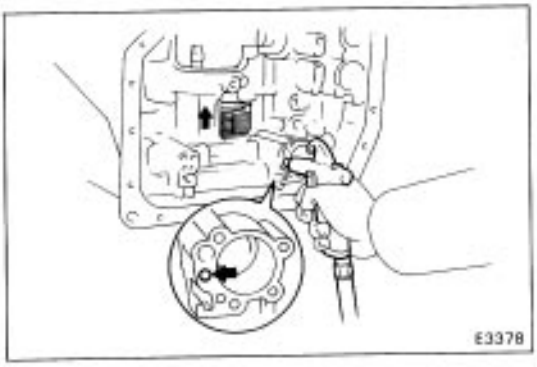

39. CONFIRM THAT FIRST AND REVERSE BRAKE PISTON MOVES

Using compressed air, confirm that the first and reverse brake piston moves smoothly.

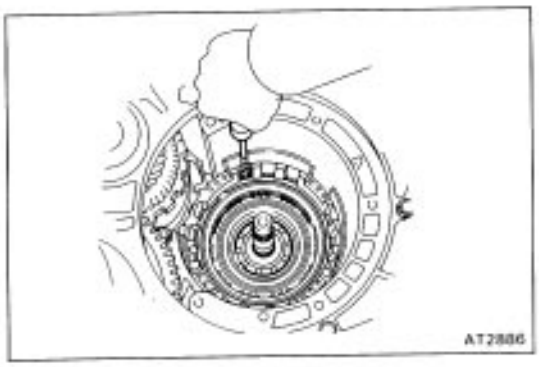

40. REMOVE SNAP RING HOLDING FLANGE TO CASE

Using a screwdriver, remove the snap ring.

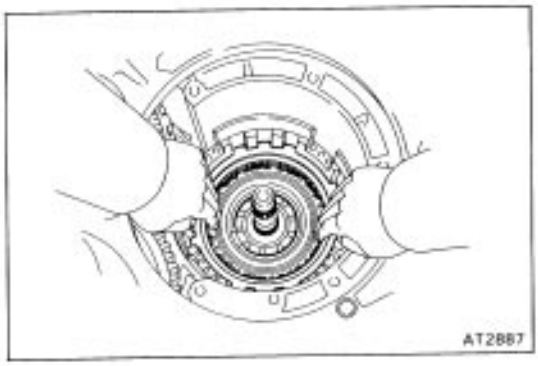

41. REMOVE FLANGES, PLATES AND DISCS

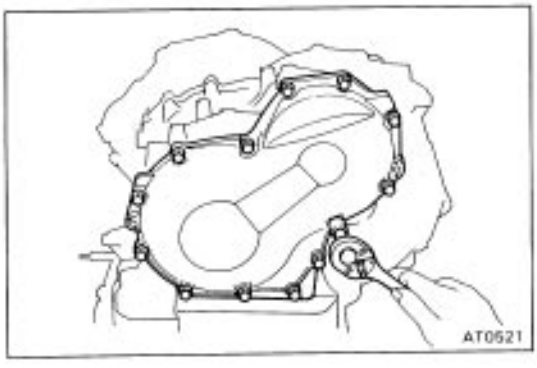

42. REMOVE TRANSAXLE REAR COVER

(a) Remove the thirteen bolts.

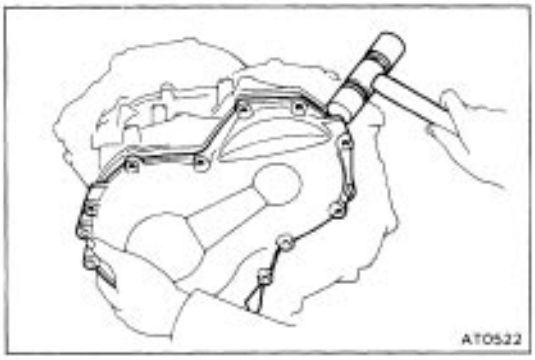

(b) Tap on the circumference of the cover with a plastic hammer to remove the cover from the transmission case, and remove the cover.

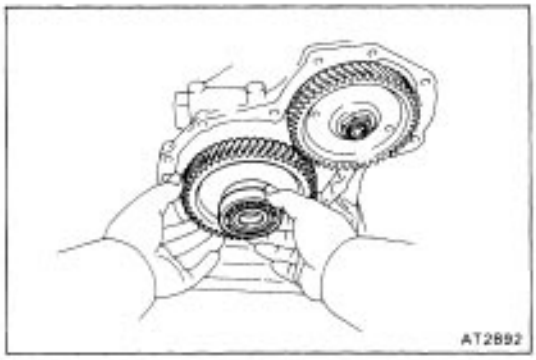

43. REMOVE INTERMEDIATE SHAFT

Remove the intermediate shaft from the transmission case.

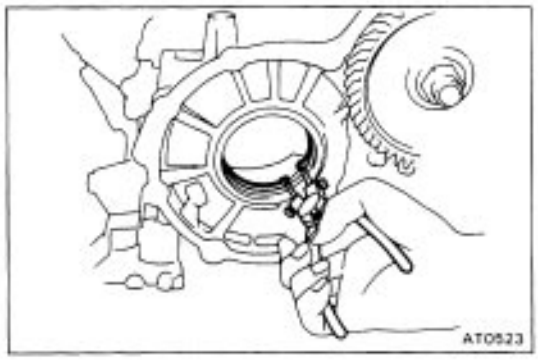

44. REMOVE SNAP RING

Using snap ring pliers, remove the snap ring.

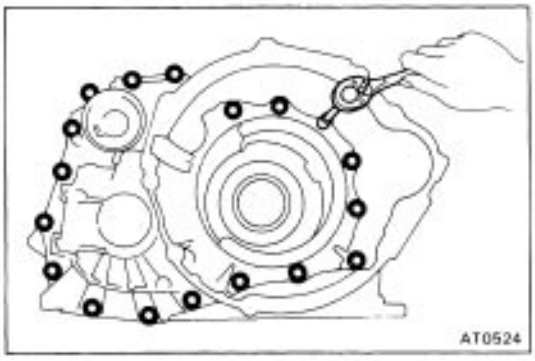

45. REMOVE TRANSAXLE HOUSING

Remove the eighteen bolts and transaxle housing.

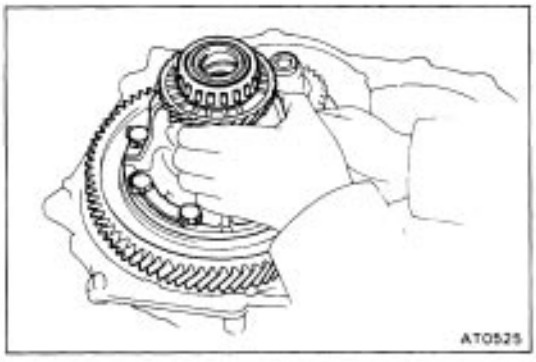

46. REMOVE DIFFERENTIAL

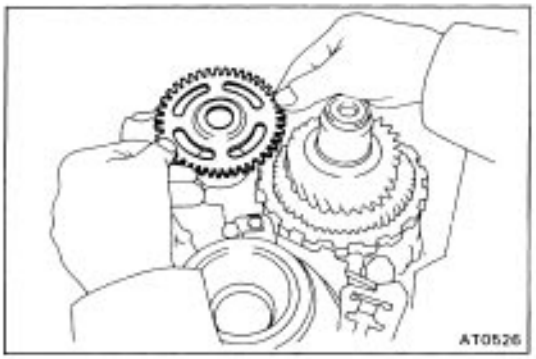

47. REMOVE GOVERNOR DRIVEN GEAR

(a) Remove the governor driven gear.

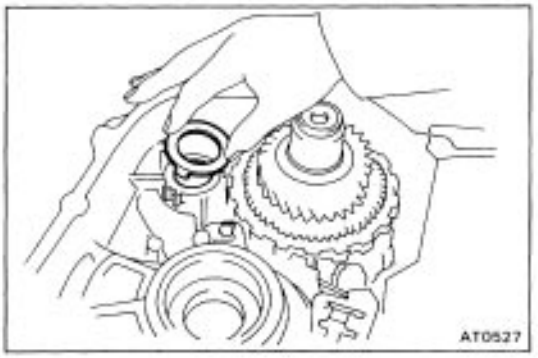

(b) Remove the thrust washer.

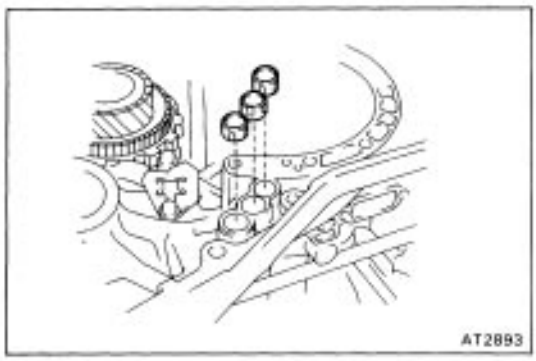

48. REMOVE APPLY GASKETS

Remove the three gaskets.

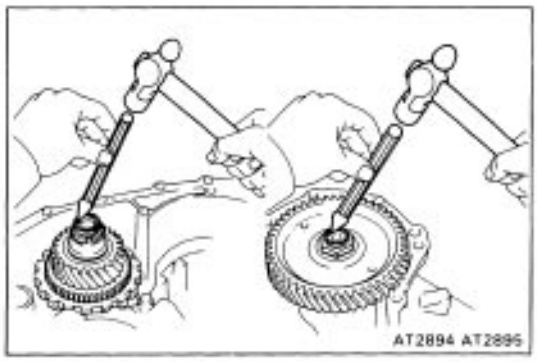

49. REMOVE COUNTER SHAFT LOCK NUTS

(a) Using a chisel and hammer, unstake the counter shaft lock nut on both sides.

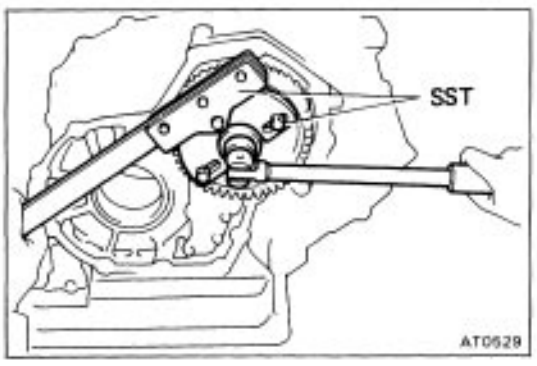

(b) Using SST, remove the lock nut of the driven gear side.

SST 09330–00021, 09350–32014 (09351–32031)

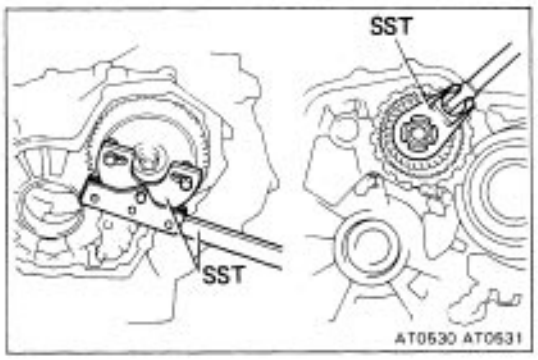

(c) Using SST to hold the driven gear, remove the lock nut of the another side.
SST 09330–00021 and
09350–32014 (09351–32031, 09351–32170)

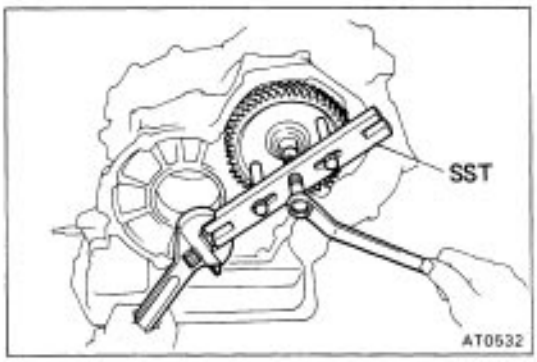

50. REMOVE COUNTER DRIVEN GEAR

Using SST, remove the driven gear.
SST 09350–32014 (09351–32061)

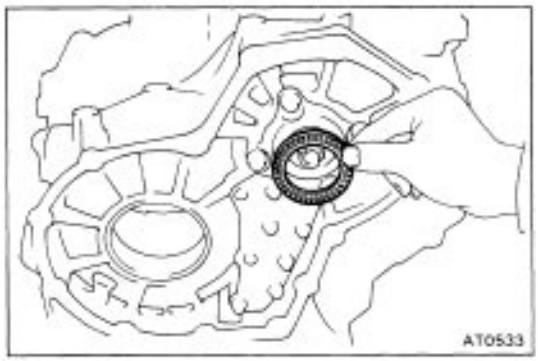

51. REMOVE THRUST NEEDLE BEARING

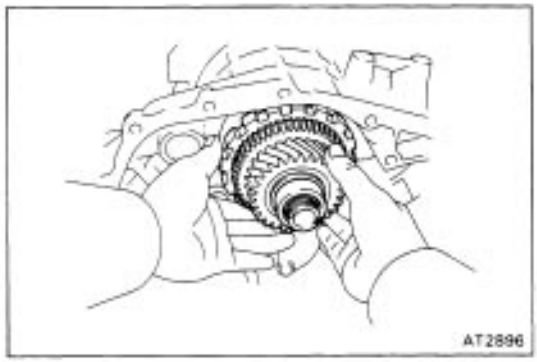

52. REMOVE COUNTER SHAFT ASSEMBLY

Pull out the counter shaft assembly.

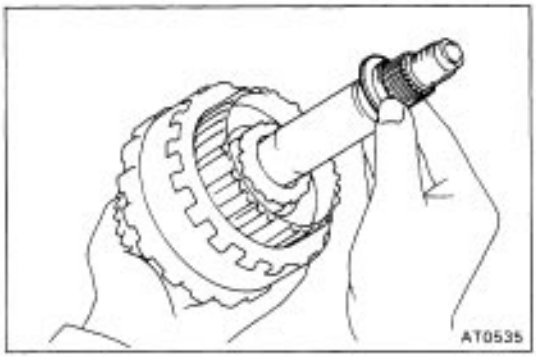

53. REMOVE THRUST BEARING WITH RACE

Remove the thrust bearing with race from the counter shaft assembly.

54. CHECK PISTON STROKE OF UNDERDRIVE CLUTCH

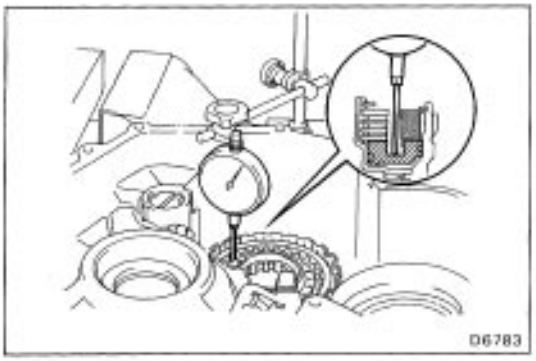

(a) Set a dial indicator (long type pick or SST) as shown.
SST 09350–32014 (09351–32190)

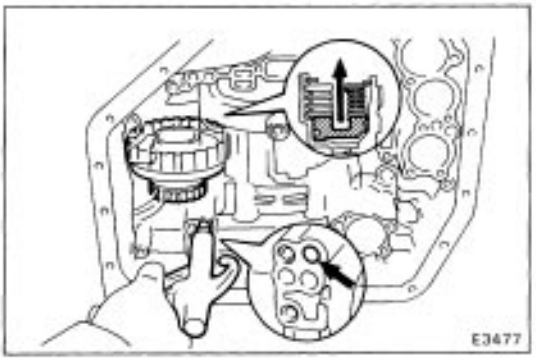

(b) Applying and releasing the compressed air (4 – 8 kg/cm2, 57 – 114 psi, 392 – 785 kPa), measure the underdrive clutch piston stroke.
Piston stroke: 1.50 – 1.86 mm (0.0591 – 0.0732 in.)
If the piston stroke is nonstandard, select another flange.
HINT: There are two different flange thickness.
Flange thickness: 2.04 mm (0.0803 in.)
2.40 mm (0.0945 in.)

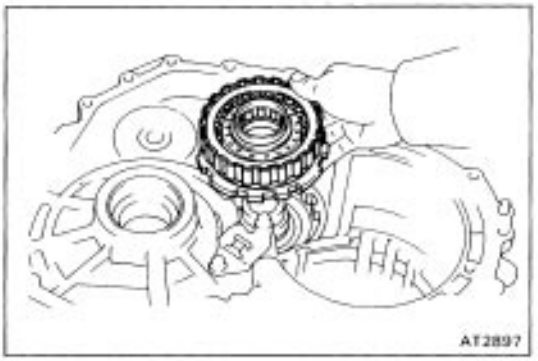

55. REMOVE UNDERDRIVE CLUTCH DRUM AND ANTI–RATTLE CLIP

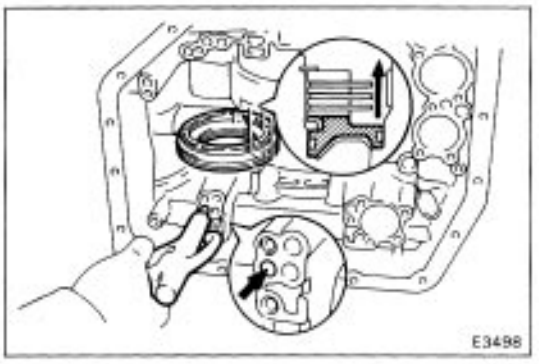

56. CONFIRM THAT UNDERDRIVE BRAKE PISTON MOVES
Using compressed air, confirm that the underdrive brake piston moves smoothly.

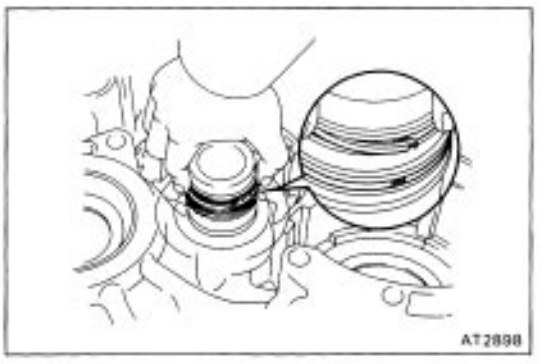

57. REMOVE OIL SEAL RINGS
Remove the two oil seal rings.

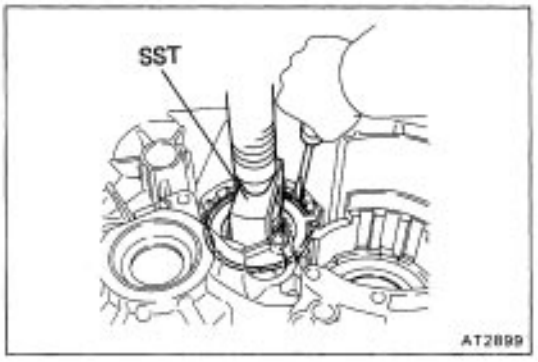

58. REMOVE FLANGE, PLATES AND DISCS

(a) Using SST and press, press in the flange until the snap ring is free from the flange.
SST 09350–32014 (09351–32070)

(b) Using a screwdriver, remove the snap ring.

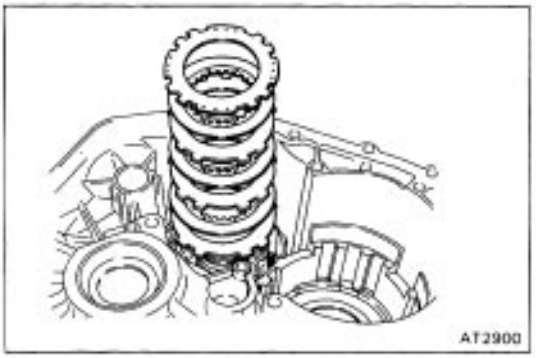

(c) Remove the flange, three plates and discs.

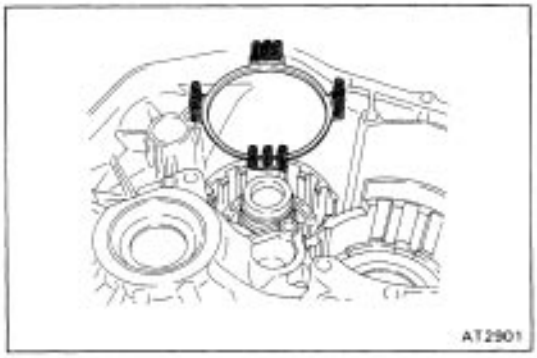

59. REMOVE RETURN SPRING

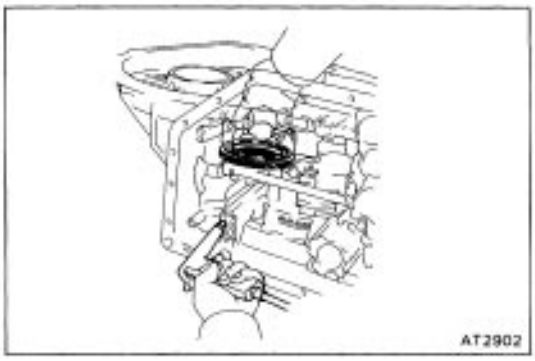

60. REMOVE UNDERDRIVE BRAKE PISTON

Using low–pressure compressed air (1 kg /cm2, 14 psi, 98 kPa) , pop out the brake piston into a rag. Force air into the hole shown and remove the brake piston.

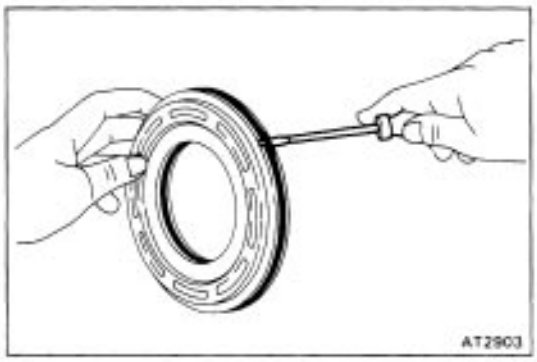

61. REMOVE O–RINGS FROM PISTON

Remove the two O–rings from the piston.

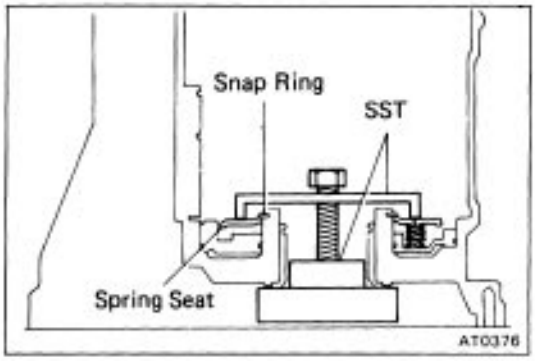

62. REMOVE SNAP RING

(a) Set SST, and tighten the bolt gradually to compress the springs until the snap ring is free from the spring seat.
SST 09350–32014 (09351–32040)

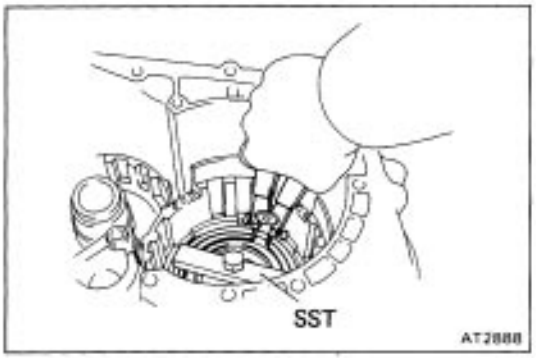

(b) Using snap ring pliers, remove the snap ring.
(c) Remove SST.
SST 09350–32013 (09351–32040)

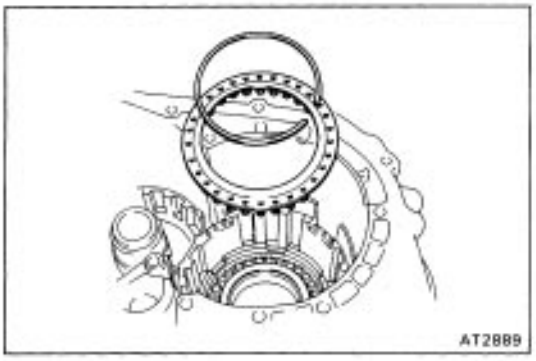

63. REMOVE RETURN SPRING

Remove the return spring and snap ring.

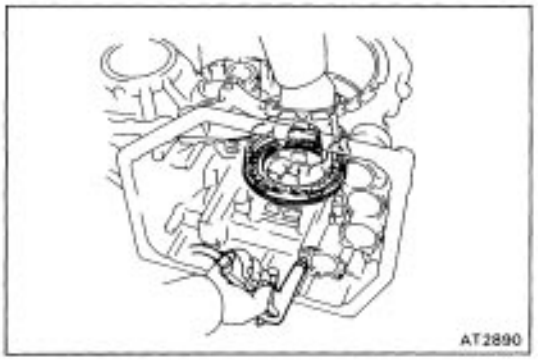

64. REMOVE PISTON FROM TRANSMISSION CASE WITH COMPRESSED AIR

(a) Apply compressed air into the oil passage of the case to remove the piston.

HINT: Hold the piston so it is not slanted and blow with the gun slightly away from the oil hole.

(b) If the piston does not pop out with compressed air, use needle–nose pliers to remove it.

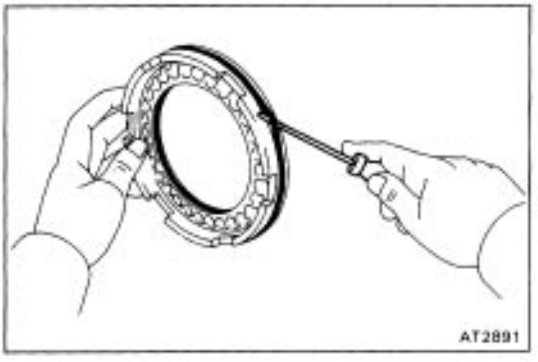

65. REMOVE O–RINGS FROM PISTON

Remove the two O–rings from the piston.

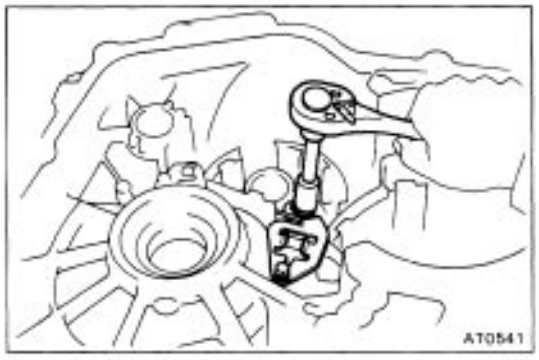

66. REMOVE PARKING LOCK PAWL STOPPER PLATE, TORSION SPRING AND SPRING GUIDE

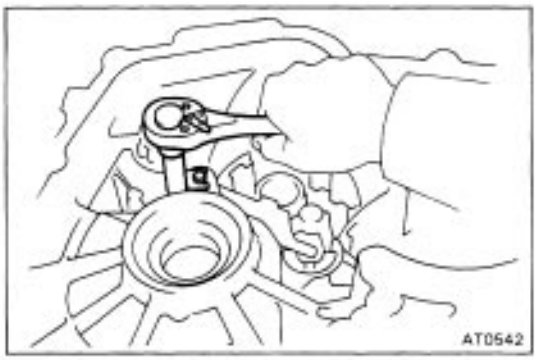

67. REMOVE PAWL SHAFT CLAMP

Remove the bolt and pawl shaft clamp.

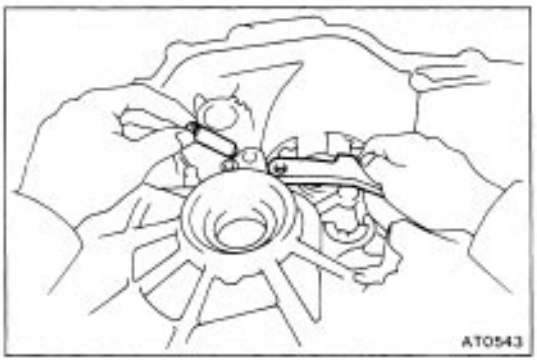

68. REMOVE PARKING LOCK PAWL SHAFT AND LOCK PAWL

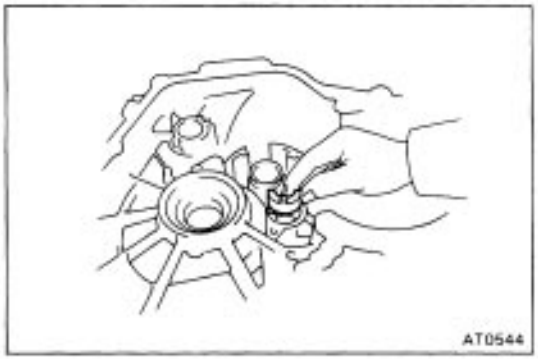

69. REMOVE PARKING LOCK SLEEVE

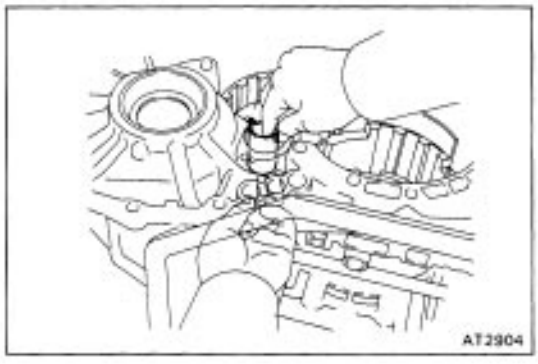

70. REMOVE CAM GUIDE BRACKET

Remove the cam guide bracket as shown.

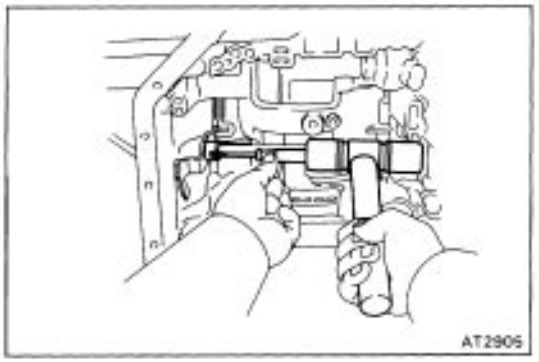

71. REMOVE MANUAL VALVE SHAFT SPACER

Using a screwdriver and hammer, unstake the spacer and remove it.

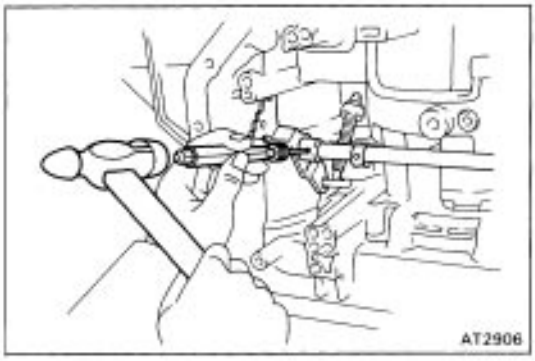

72. REMOVE PIN

Using a punch and hammer, drive out the pin.

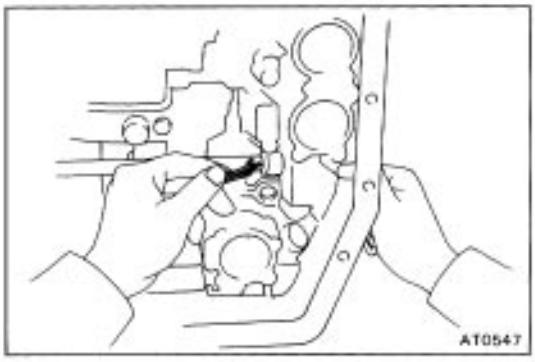

73. REMOVE MANUAL VALVE SHAFT AND LEVER

(a) Remove the retaining spring.

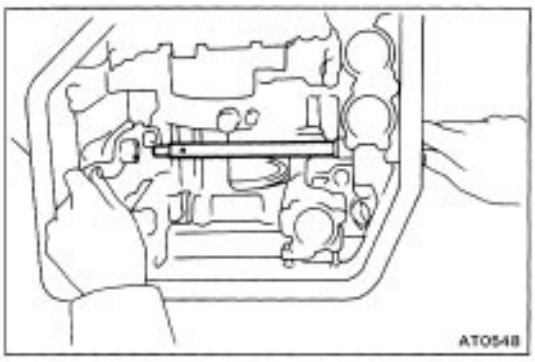

(b) Slide out the manual valve shaft and remove the manual valve lever and washer.

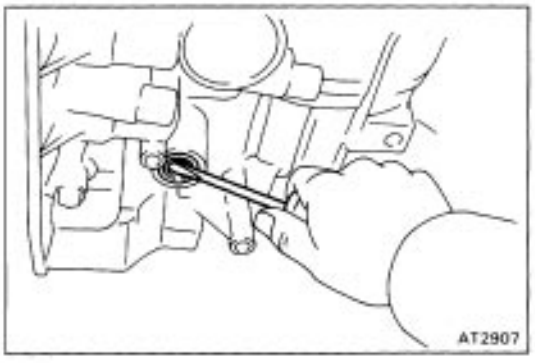

74. IF NECESSARY, REPLACE OIL SEAL OF MANUAL SHAFT

(a) Using a screwdriver, remove the oil seal.

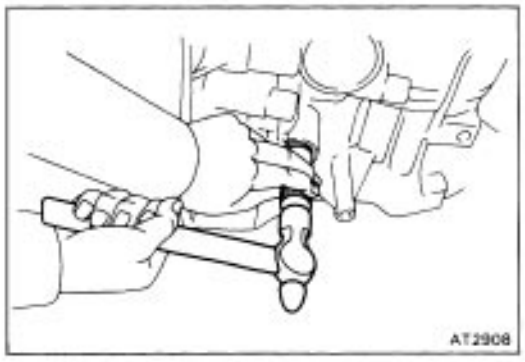

(b) Using a 14 mm socket wrench and hammer, drive in a new oil seal.
(c) Apply MP grease to the oil seal lip.

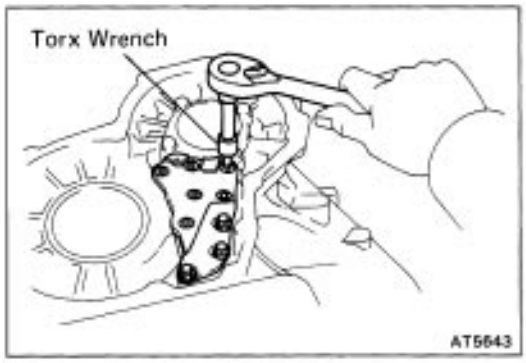

75. REMOVE OIL GALLERY COVER AND GASKET

(a) Remove the three bolts.
(b) Using a torx wrench, remove the six screws. Remove the gallery cover and gasket.

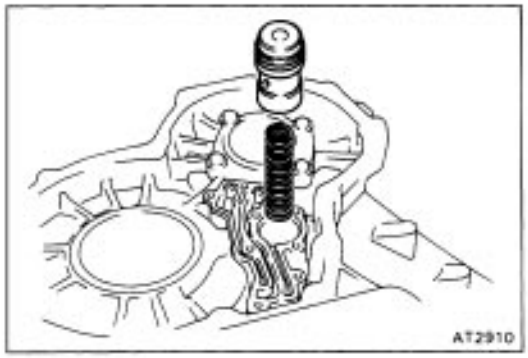

76. REMOVE 134 ACCUMULATOR PISTON AND SPRING

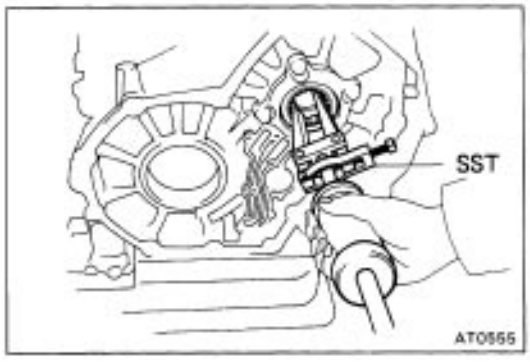

77. REMOVE BEARING

Using SST, remove the bearing.
SST 09308–00010

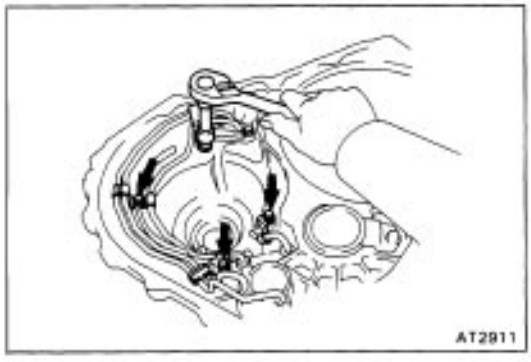

78. REMOVE OIL TUBES

(a) Remove the four tube clamps.

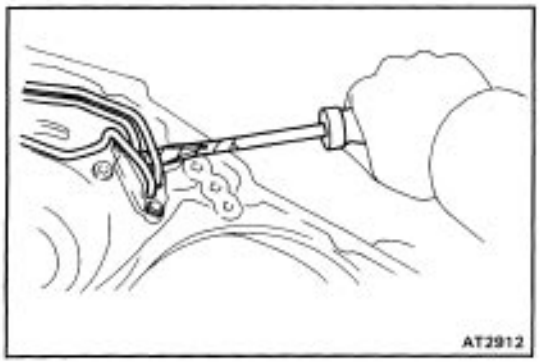

(b) Using a screwdriver, remove the four oil tubes.

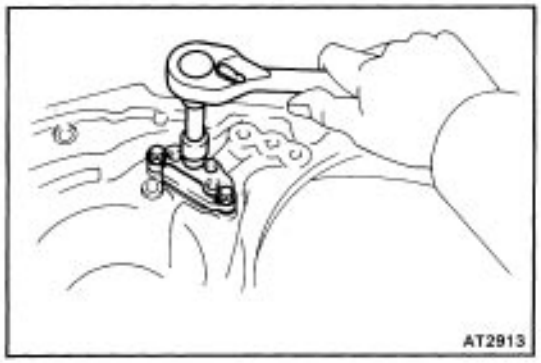

79. REMOVE OIL TUBE APPLY COVER AND GASKET

Remove the three bolts, and remove the cover and gasket.

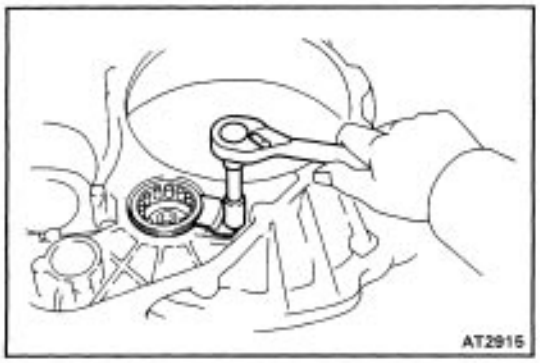

80. REMOVE BEARING

(a) Remove the bolt and stopper.

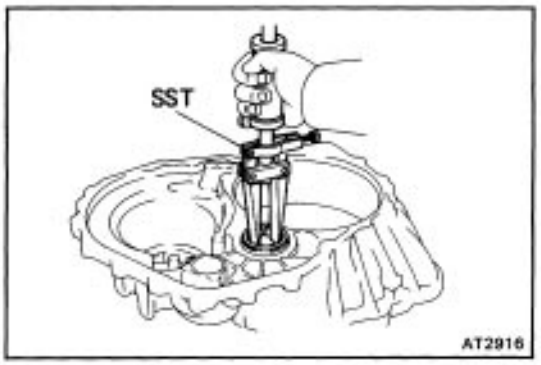

(b) Using SST, remove the bearing.

SST 09308–00010

REMOVAL OF COMPONENT PARTS (A241H)

COMPONENTS

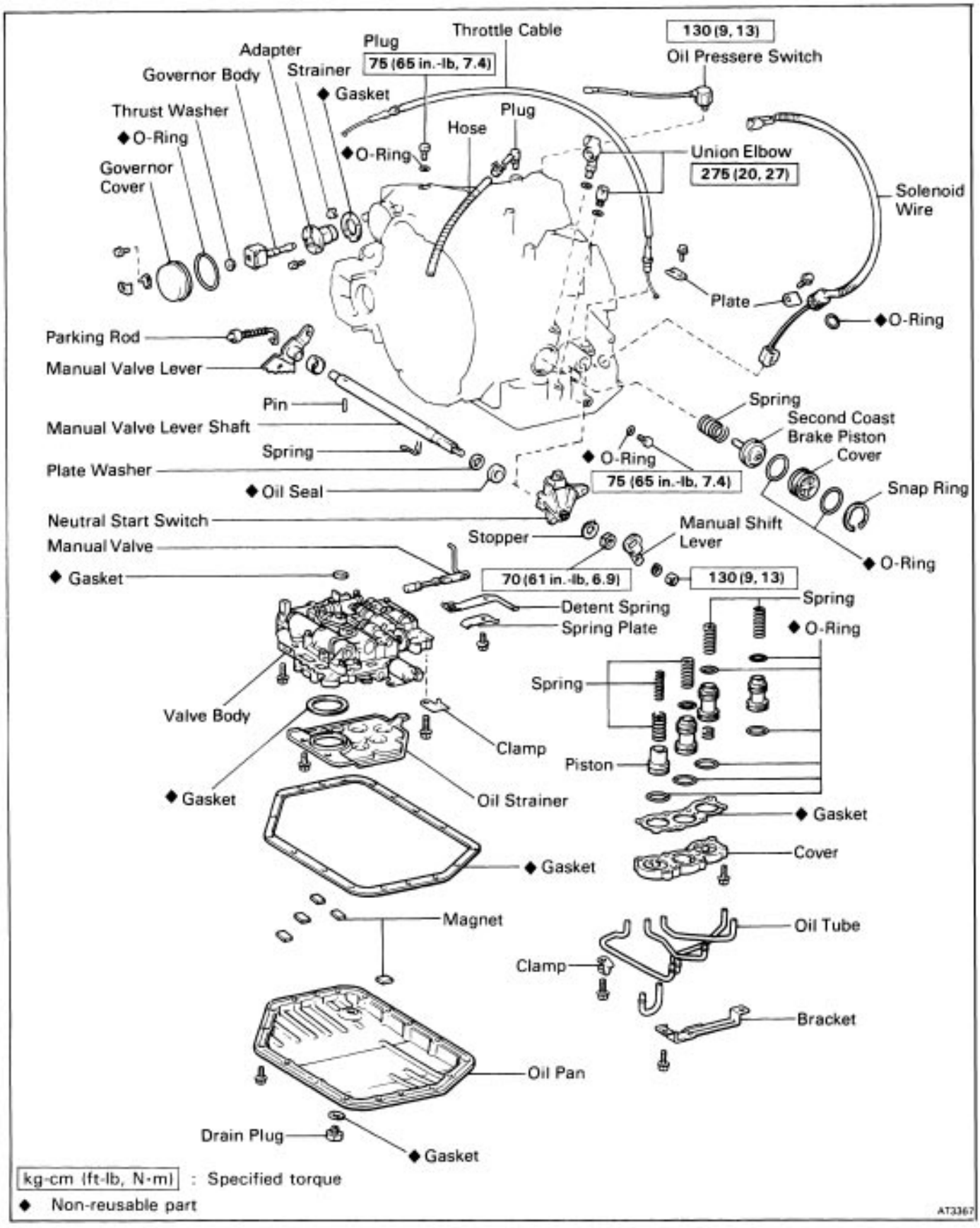

COMPONENTS (Cont'd)

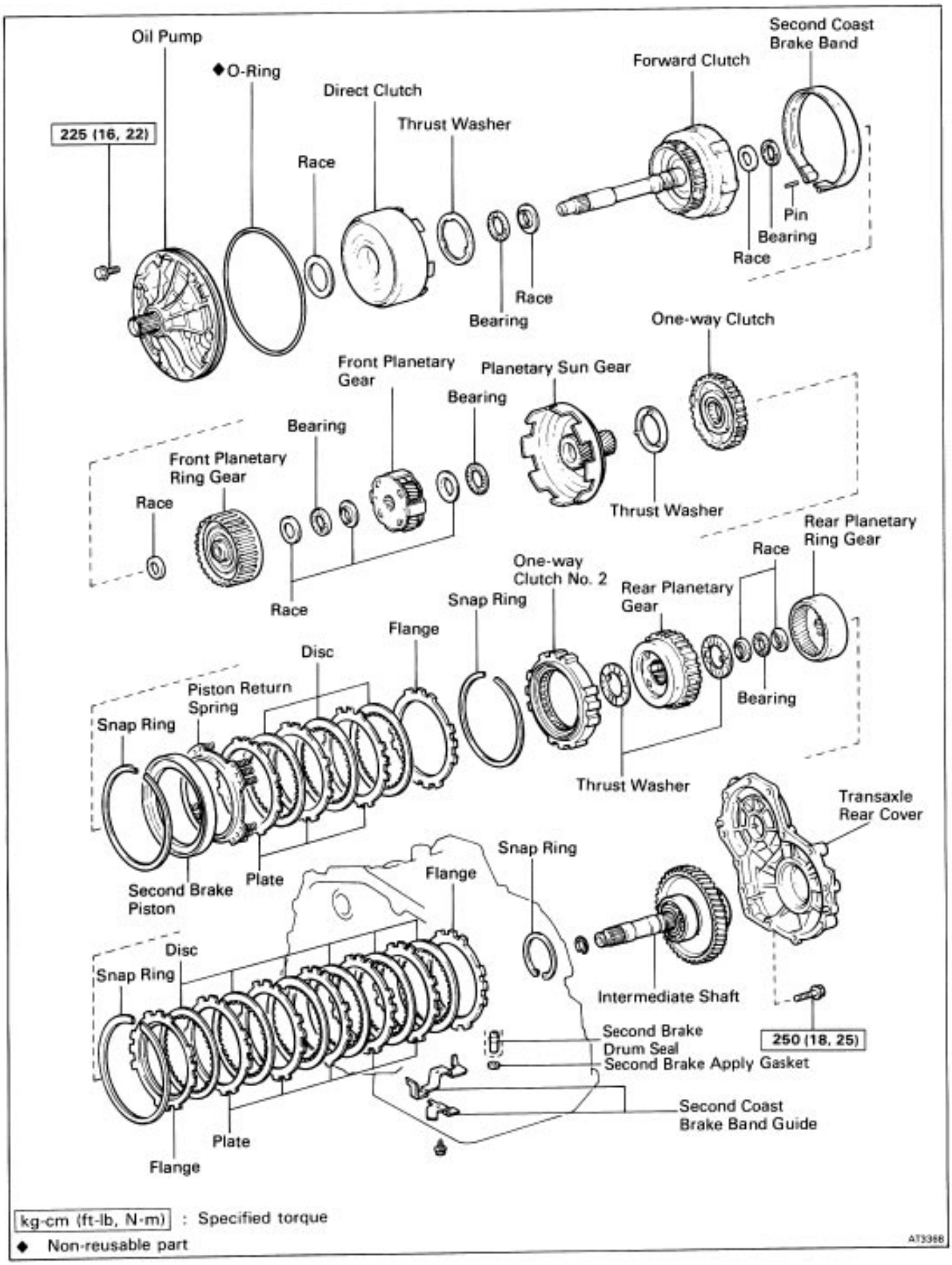

COMPONENTS (Cont'd)

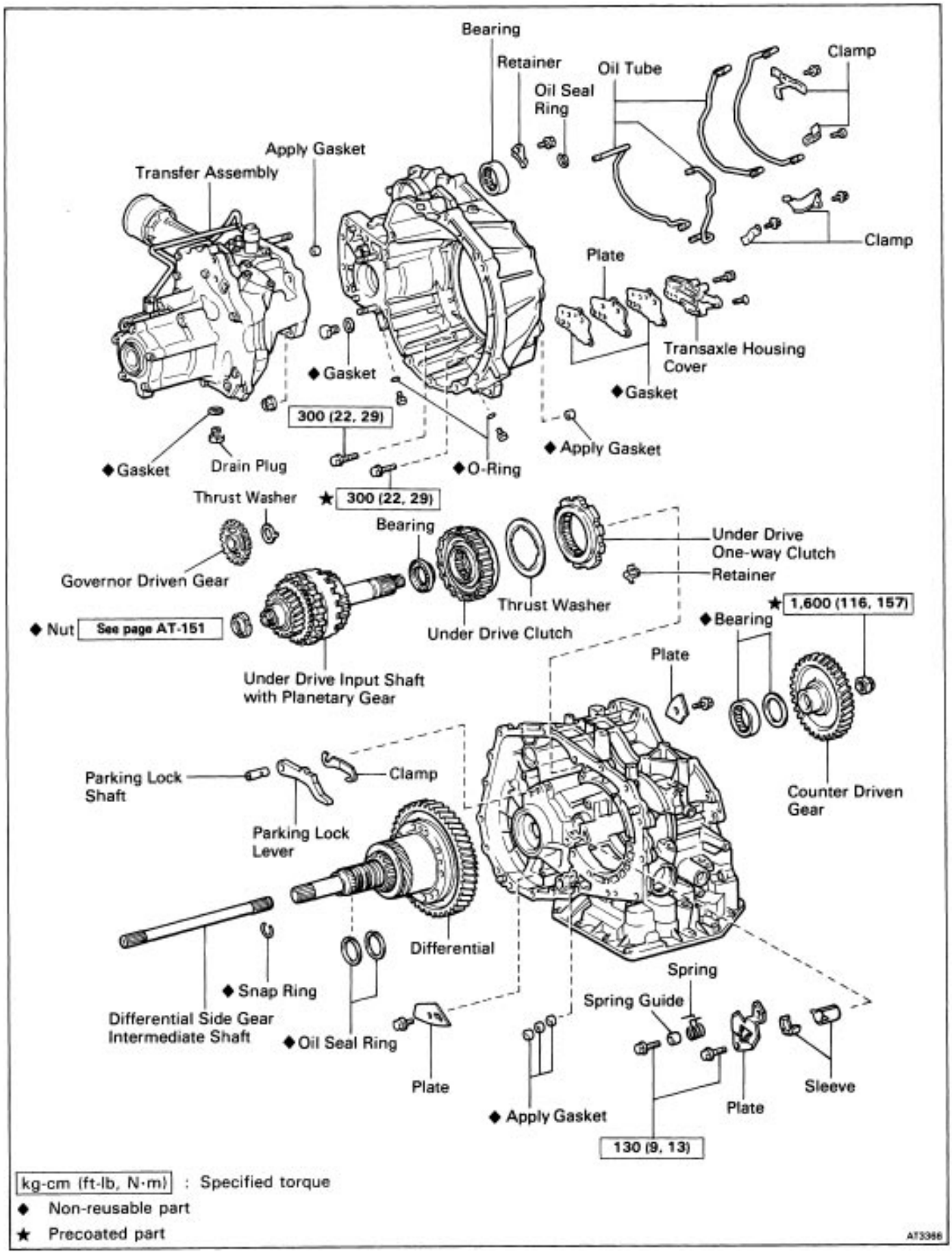

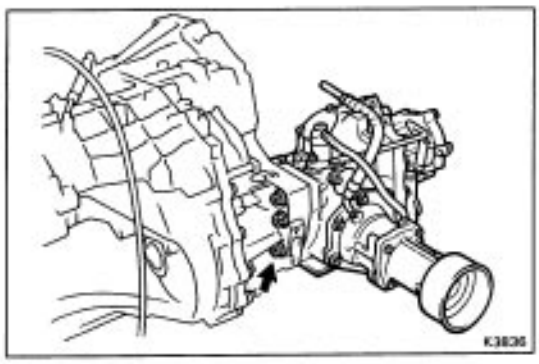

SEPARATE BASIC SUBASSEMBLY

1. REMOVE TRANSFER ASSEMBLY

(a) Remove six nuts.

(b) Using a plastic hammer, remove the transfer assembly from the transaxle.

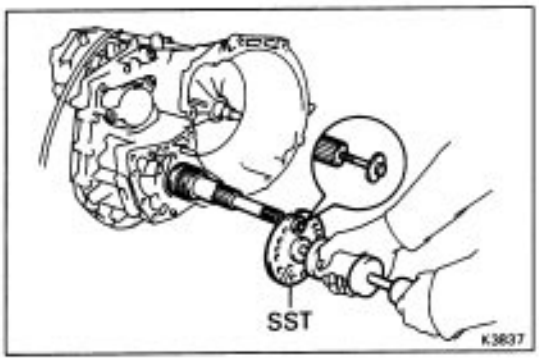

2. REMOVE DIFFERENTIAL SIDE GEAR INTERMEDIATE SHAFT

(a) Screw in suitable bolt with washer into the side gear intermediate shaft.

(b) Using SST, remove the side gear intermediate shaft.
SST 09520–32012

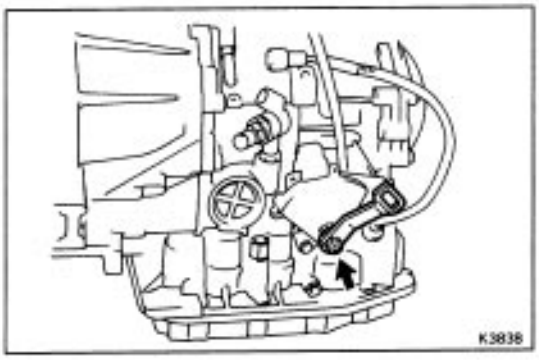

3. REMOVE MANUAL SHIFT LEVER

Remove the nut, washer and manual shift lever.

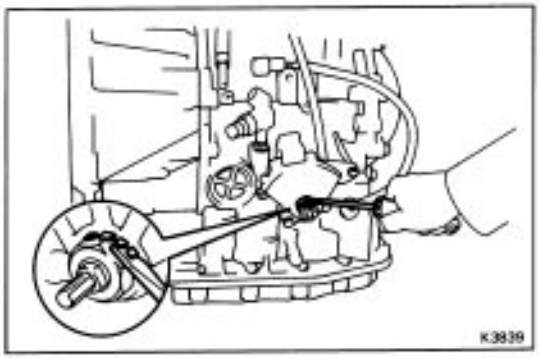

4. REMOVE NEUTRAL START SWITCH

(a) Using a screwdriver, unstake the nut stopper.

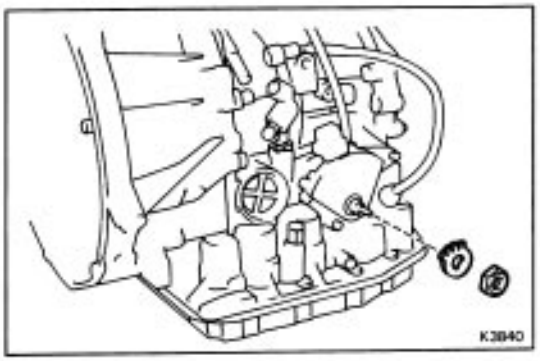

(b) Remove the nut, nut stopper and packing.

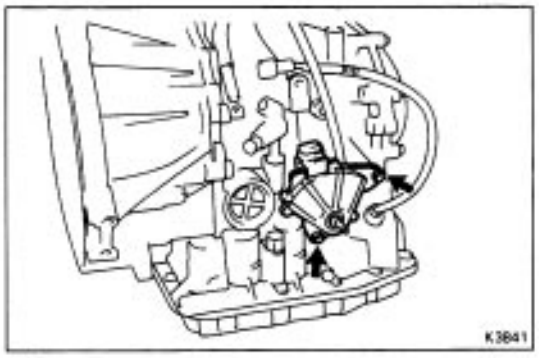

(c) Remove the two bolts and neutral start switch.

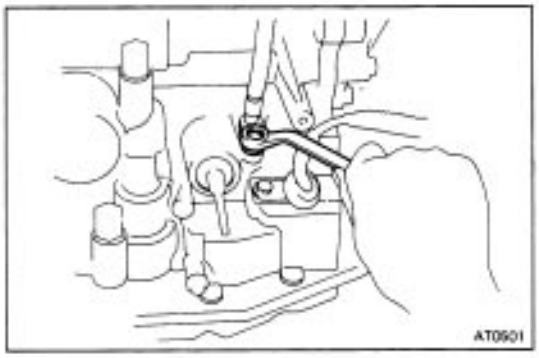

5. REMOVE THROTTLE CABLE RETAINING PLATE

Remove the bolt and plate.

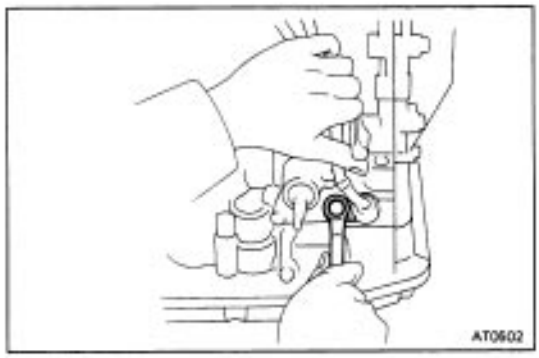

6. REMOVE SOLENOID WIRE RETAINING PLATE

Remove the bolt and plate.

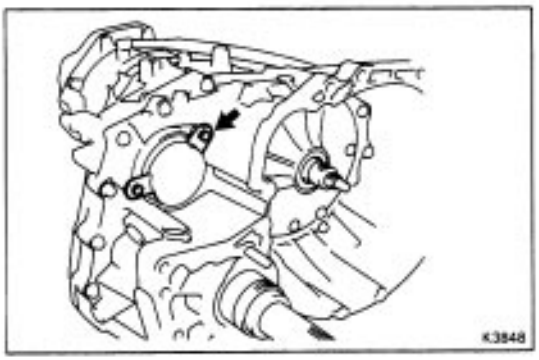

7. REMOVE GOVERNOR BODY

(a) Remove the two bolts and cover brackets.

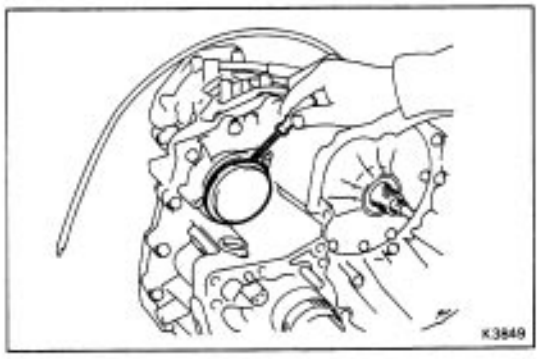

(b) Using a screwdriver, remove the governor cover.

HINT: Tape the screwdriver tip before use so as not to damage the cover of transaxle.

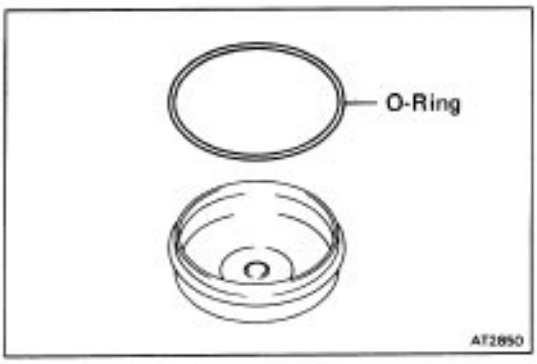

(c) Remove the O–ring from the cover.

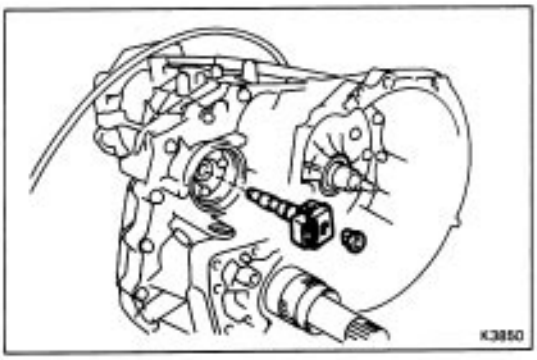

(d) Remove the governor body with thrust washer.

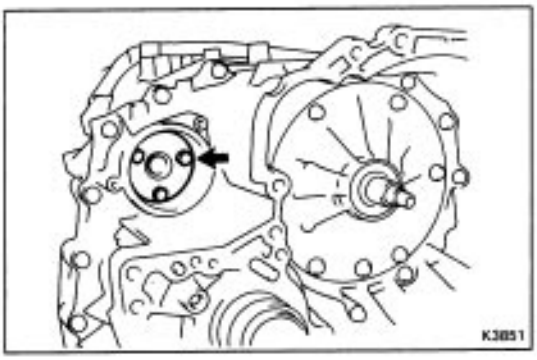

(e) Remove the three bolts and governor body adaptor with gasket.



(f) Remove the governor oil strainer.

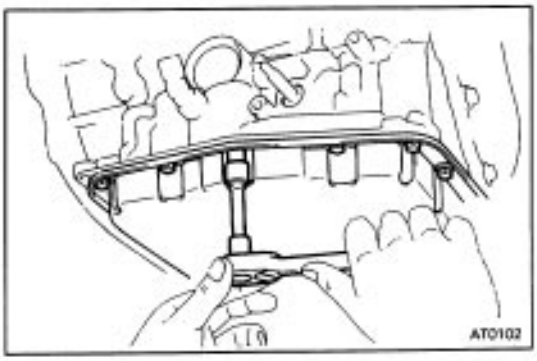

8. REMOVE PAN AND GASKET

(a) Remove the eighteen bolts.

(b) Remove the pan by lifting the transmission case.

NOTICE: Do not turn the transmission over as it will contaminate the valve body with the foreign materials in the bottom of the pan.

(c) Remove the gasket.

(d) Place the transmission on wooden blocks to prevent damage to the pipe.

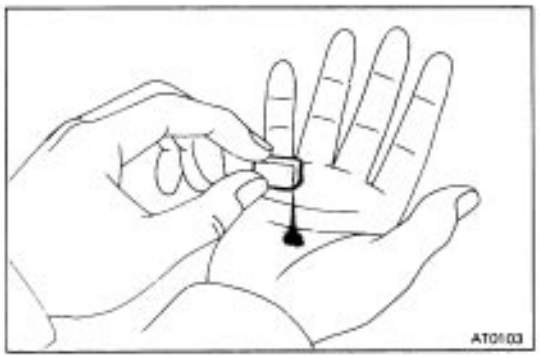

9. EXAMINE PARTICLES IN PAN

Remove the magnets and use them to collect any steel chips. Look carefully at the chips and particles in the pan and on the magnet to anticipate what type of wear you will find in the transmission:

Steel(magnetic) ..... bearing, gear and plate wear

Brass(non–magnetic) .... bushing wear

10. TURN TRANSMISSION OVER

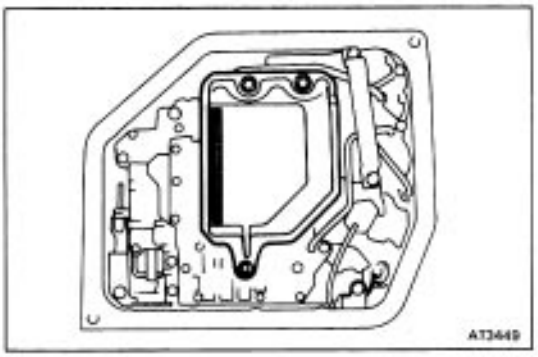

11. REMOVE OIL STRAINER

(a) Remove the three bolts and oil strainer.

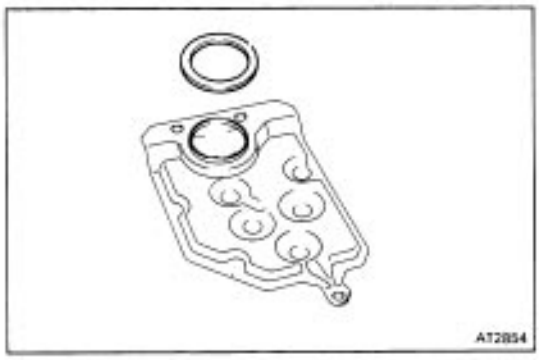

(b) Remove the gasket.

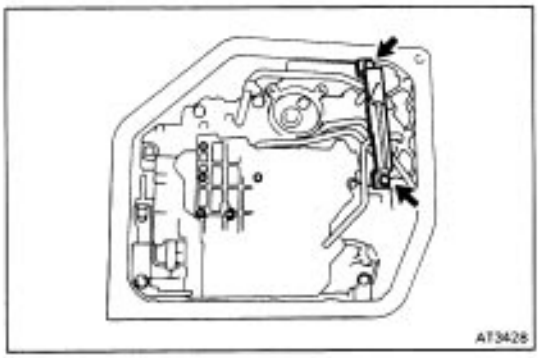

12. REMOVE OIL TUBES

(a) Remove the two bolts and tube bracket.

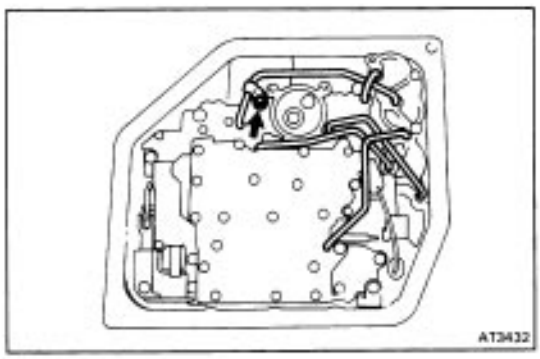

(b) Remove the tube clamp bolt and clamp.

(c) Pry up both tube ends with a large screwdriver and remove the five tubes.

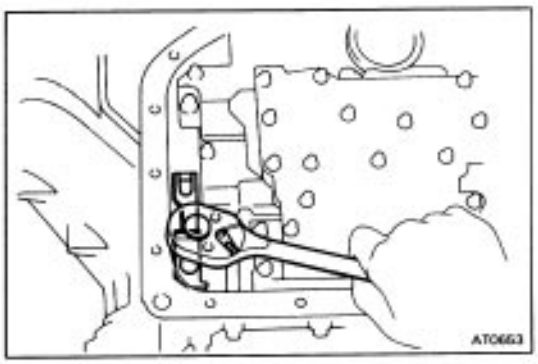

13. REMOVE MANUAL DETENT SPRING

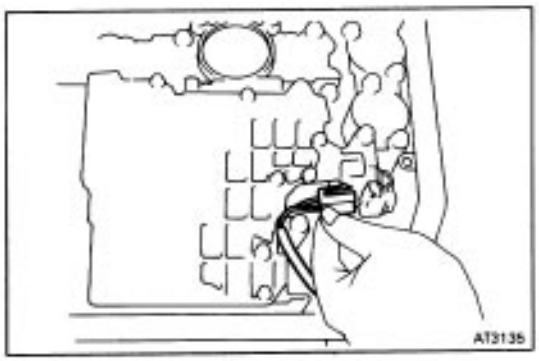

14. DISCONNECT SOLENOID CONNECTOR

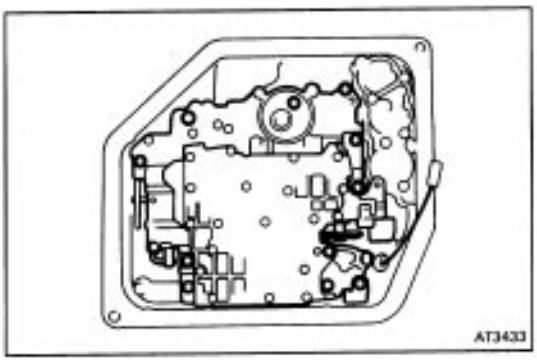

15. REMOVE VALVE BODY

(a) Remove the twelve bolts and wire retainer as shown.



(b) Disconnect the throttle cable from the cam.

(c) While disconnecting the manual valve connecting rod from the manual valve lever, remove the valve body.

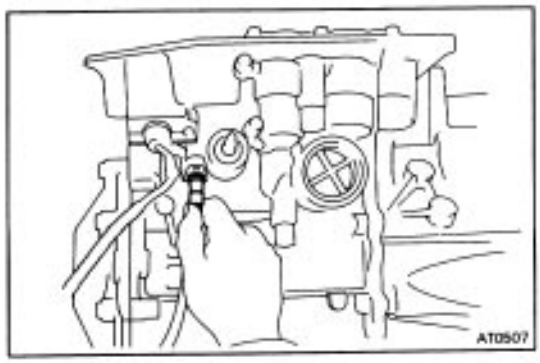

16. REMOVE THROTTLE CABLE FROM CASE

Pull out the throttle cable.

17. REMOVE SOLENOID WIRE

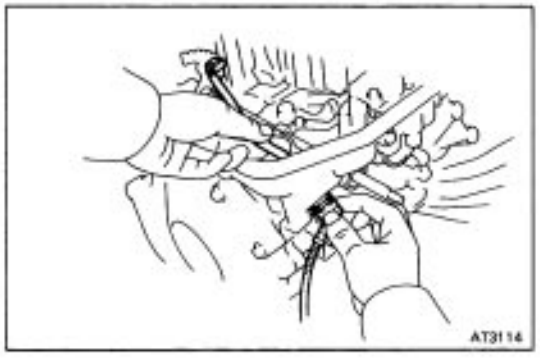

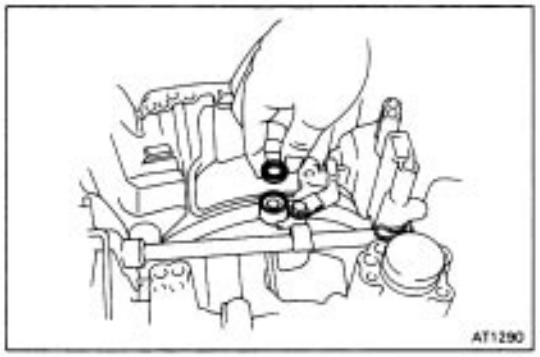

18. REMOVE SECOND BRAKE APPLY GASKET

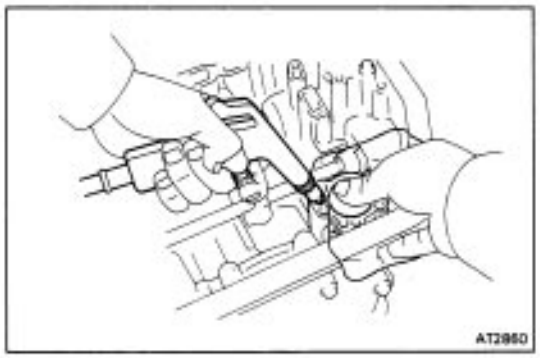

19. REMOVE C3 ACCUMULATOR PISTON AND SPRING

Using low–pressure compressed air (1 kg/cm2, 14 psi or 98 kPa) pop out the piston into a rag. Force air into the hole shown and remove the piston and spring.

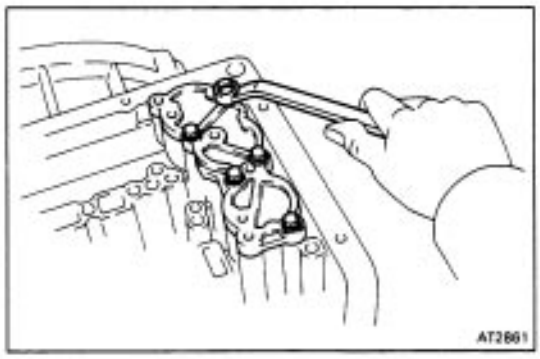

20. REMOVE ACCUMULATOR PISTONS AND SPRINGS

(a) Loosen the five bolts one turn at a time until the spring tension is released.

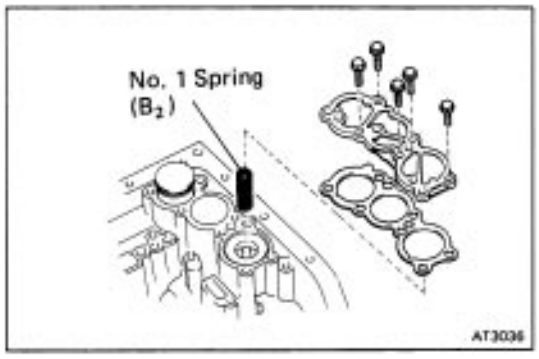

(b) Remove the cover, gasket and spring on the B2 piston.

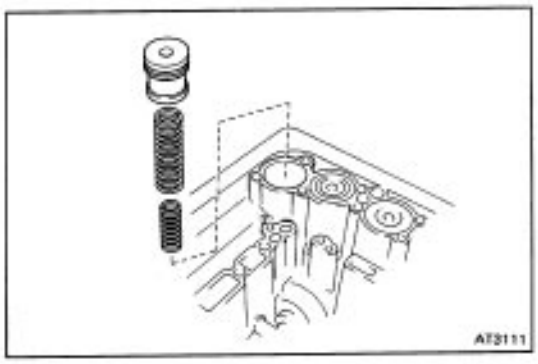

(c) Remove the C2 piston and two springs.

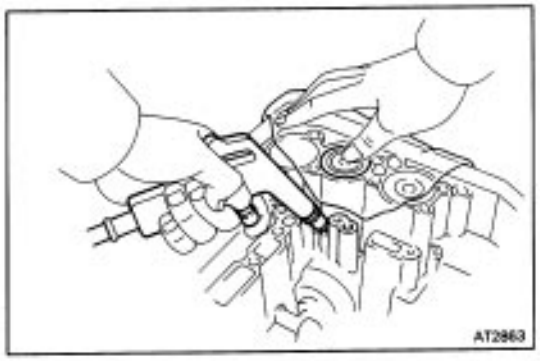

(d) Using low–pressure compressed air (1 kg/cm2, 14 psi, 98 kPa), pop out the C2 piston into a rag.
Force air into the hole shown and remove the piston and spring.

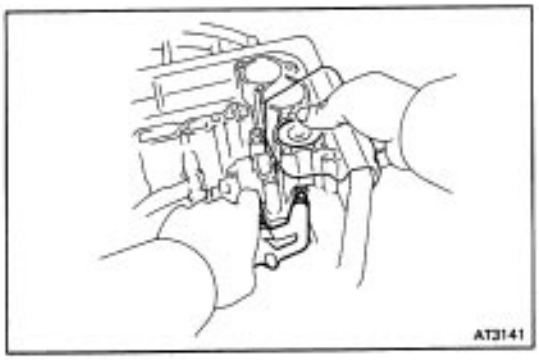

(e) Using low–pressure compressed air (1 kg/cm2, 14 psi, 98 kPa), pop out the B2 piston into a rag.
Force air into the hole shown and remove the piston and spring.

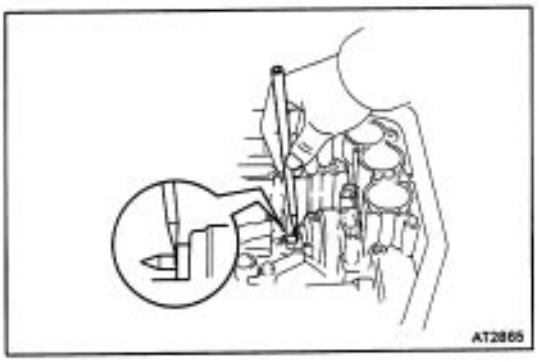

21. MEASURE PISTON STROKE OF SECOND COAST BRAKE

(a) Apply a small amount of paint to the piston rod at the point it meets the case as shown in the illustration.

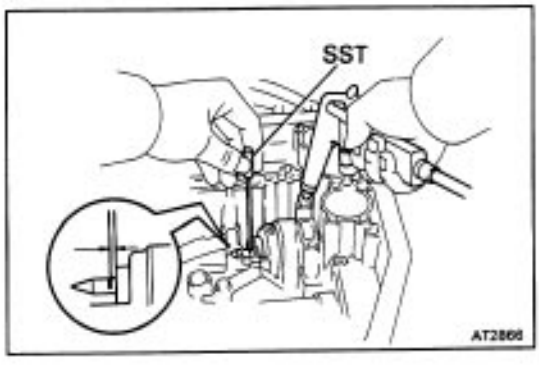

(b) Using SST, measure the piston stroke applying and releasing the compressed air (4–8 kg/cm2, 57
114 psi, 392 785 kPa) as shown.
SST 09240–00020
Piston stroke: 1.5 – 3.0 mm (0.059 – 0.118 in.)
I**f** the piston stroke exceeds the limit, inspect the brake band.

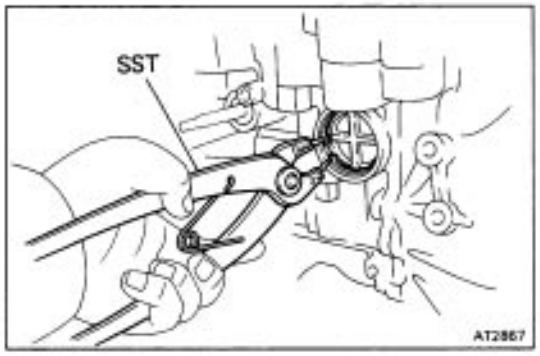

22. REMOVE SECOND COAST BRAKE PISTON

(a) Using SST, remove the snap ring.
SST 09350–32014 (09351–32050)

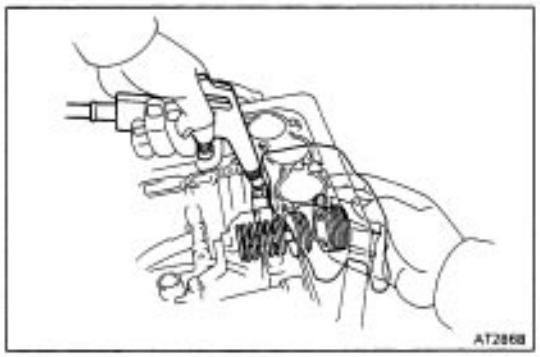

(b) Using low–pressure compressed air (1 kg/cm2, 14psi, 98 kPa), pop out the cover into a rag.
Force air into the hole shown.

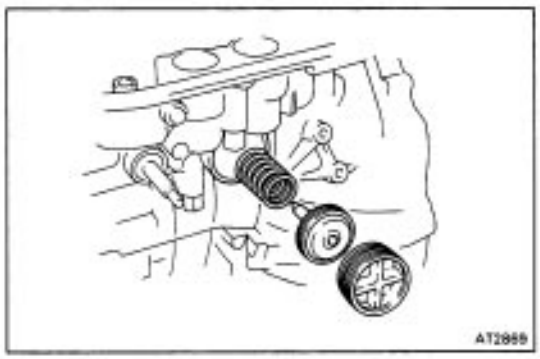

(c) Remove the cover, piston and spring.

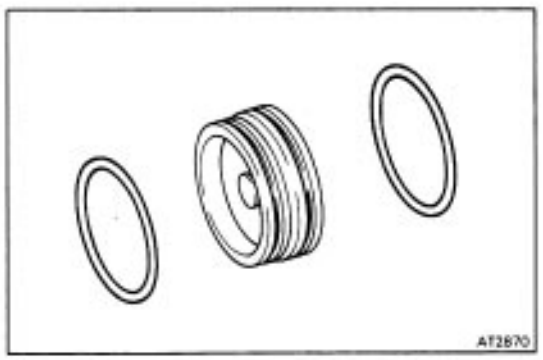

(d) Remove the two O–rings from the cover.

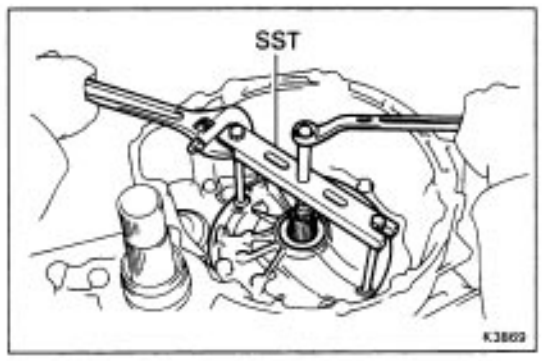

23. REMOVE OIL PUMP

(a) Remove the six bolts holding the oil pump to the transmission case.

(b) Using SST, remove the oil pump.
SST 09350–32014 (09351–32061)

NOTICE: Be careful not to drop or damage the races and bearing behind oil pump.

(c) Remove SST from the oil pump.

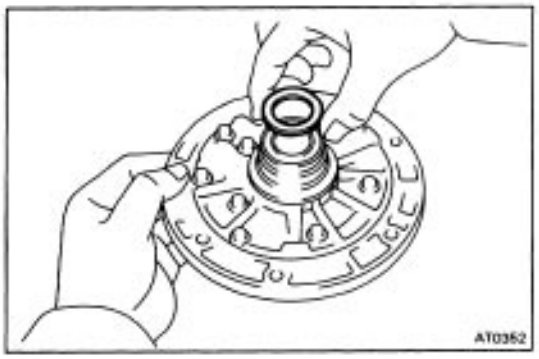

(d) Remove the race from the oil pump.

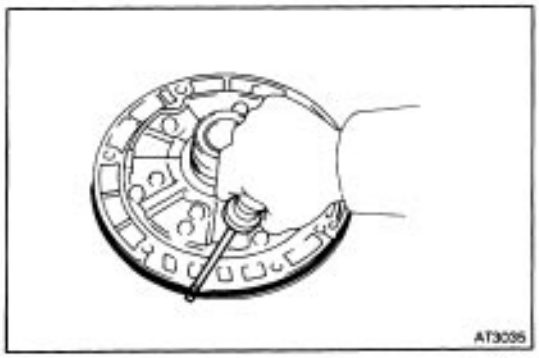

(e) Remove the O–ring from the oil pump.

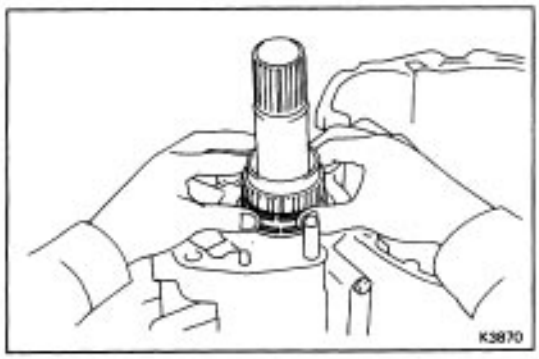

24. REMOVE OIL SEAL RINGS

Remove the two oil seal rings.

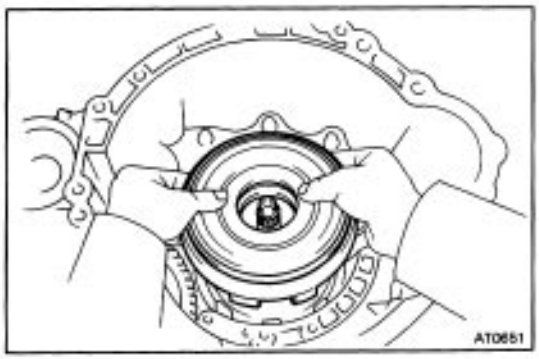

25. REMOVE DIRECT CLUTCH

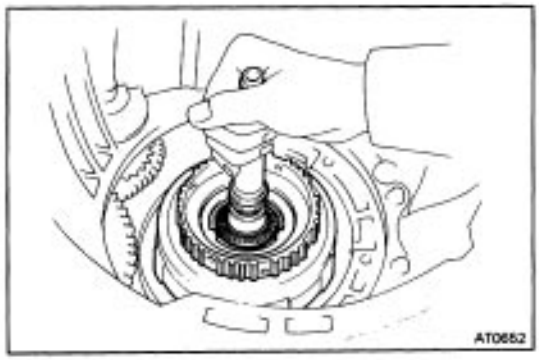

26. REMOVE FORWARD CLUTCH

(a) Remove the forward clutch with bearing and race.

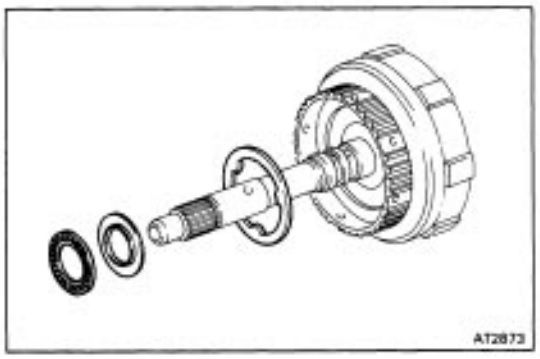

(b) Remove the thrust washer, bearing and races from the forward clutch.

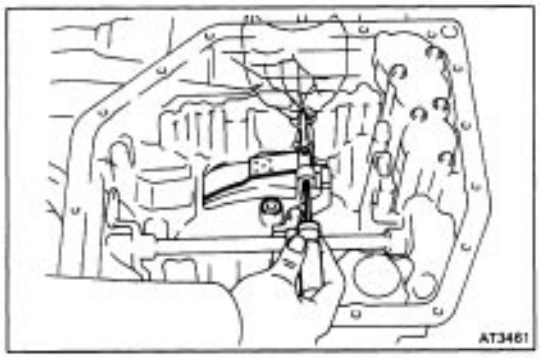

27. REMOVE SECOND COAST BRAKE BAND

(a) Push the pin with a small screwdriver and remove it from the bolt hole of the oil pump mounting.

(b) Remove the brake band.

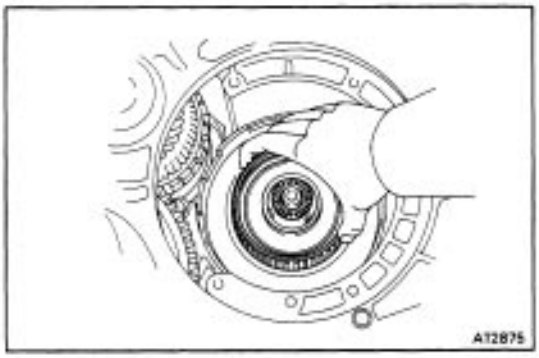

28. REMOVE FRONT PLANETARY RING GEAR

(a) Remove the front planetary ring gear with bearing and race.

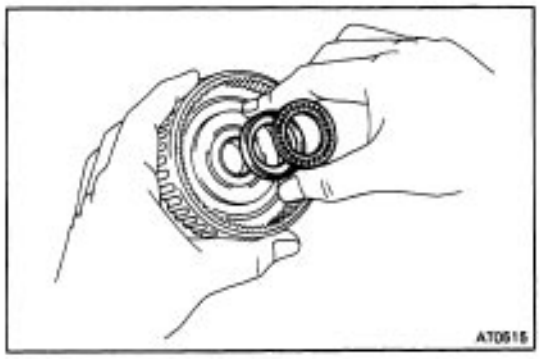

(b) Remove the bearing and race from the ring gear.

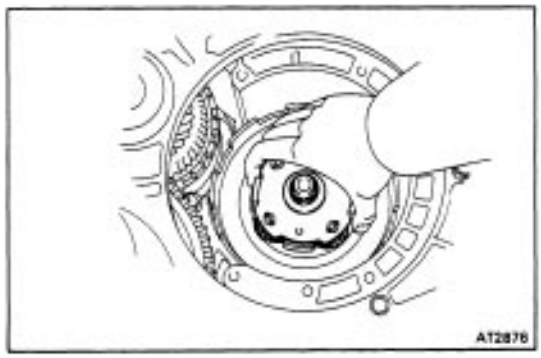

29. REMOVE FRONT PLANETARY GEAR

(a) Remove the front planetary gear with race.

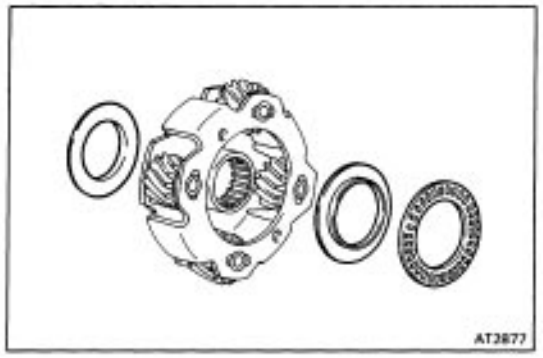

(b) Remove the races and bearing from the planetary gear or sun gear.

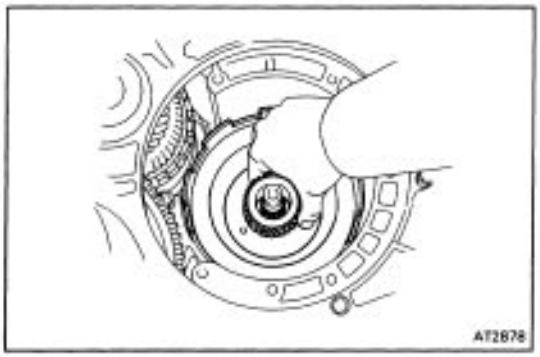

30. REMOVE SUN GEAR, SUN GEAR INPUT DRUM AND THRUST WASHER

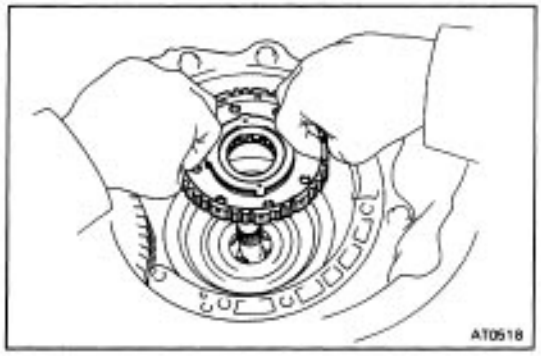

31. REMOVE SECOND BRAKE HUB AND NO.1 ONE–WAY CLUTCH

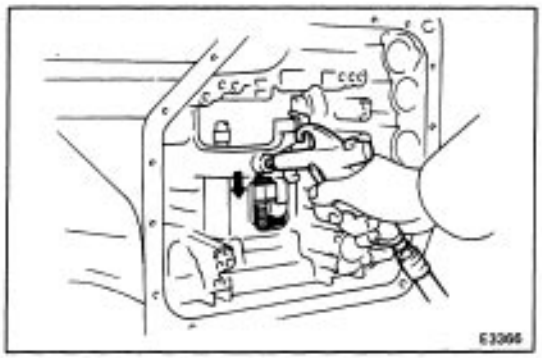

32. CONFIRM THAT SECOND BRAKE PISTON MOVES

Using compressed air, confirm that the second brake piston moves smoothly.

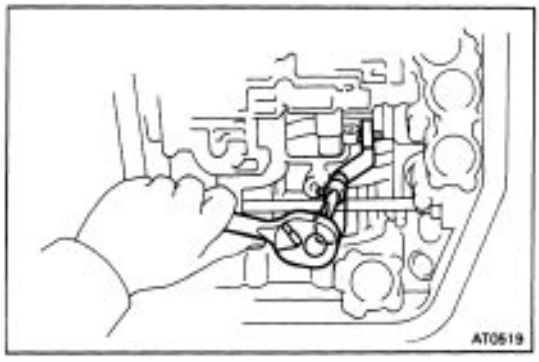

33. REMOVE SECOND COAST BRAKE BAND GUIDE

34. REMOVE SNAP RING HOLDING SECOND BRAKE DRUM TO CASE

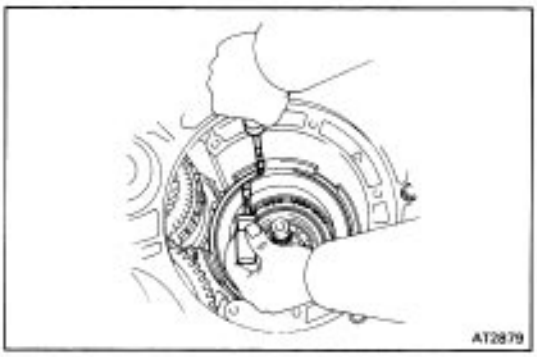

35. REMOVE SECOND BRAKE DRUM

HINT: If the brake drum is difficult to remove, lightly tap it with a wooden block.

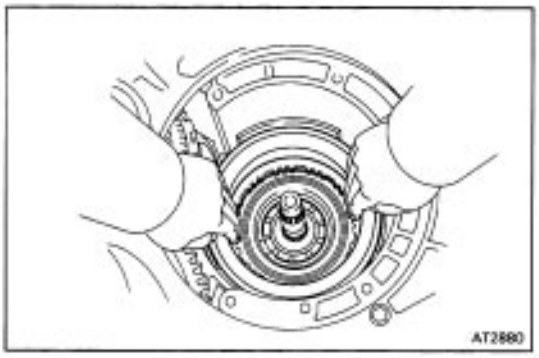

36. REMOVE SECOND BRAKE DRUM SEAL

Using a needle nose pliers, pull out the second brake drum seal.

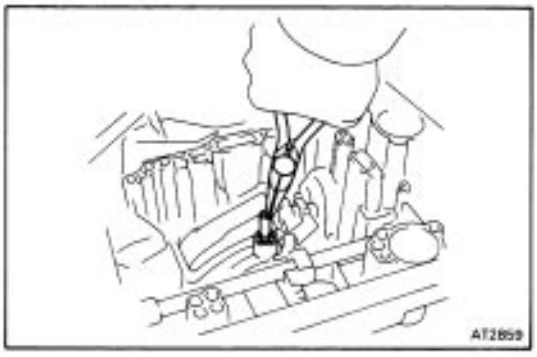

37. REMOVE SECOND BRAKE PISTON RETURN SPRING

(a) Remove the thrust washer.
(b) Remove the return spring.

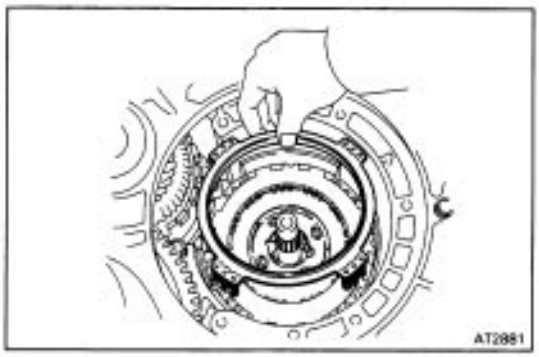

38. REMOVE PLATES, DISCS AND FLANGE

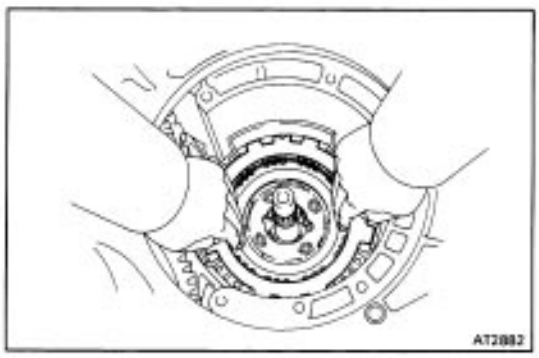

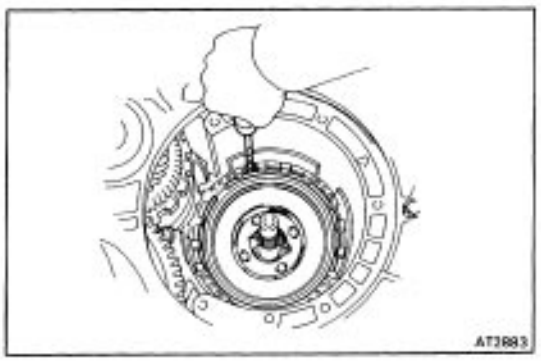

39. REMOVE SNAP RING HOLDING NO.2 ONE–WAY CLUTCH OUTER RACE TO CASE

Using a screwdriver, remove the snap ring.

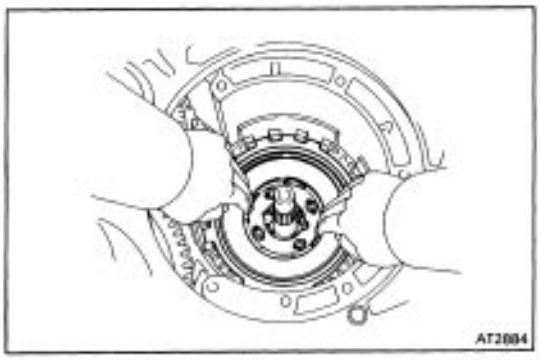

40. REMOVE NO.2 ONE–WAY CLUTCH AND REAR PLANETARY GEAR

(a) Remove the No.2 one–way clutch and rear planetary gear with thrust washer.

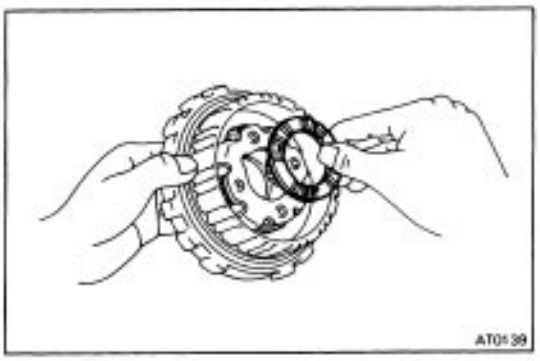

(b) Remove the thrust washer from the gear.

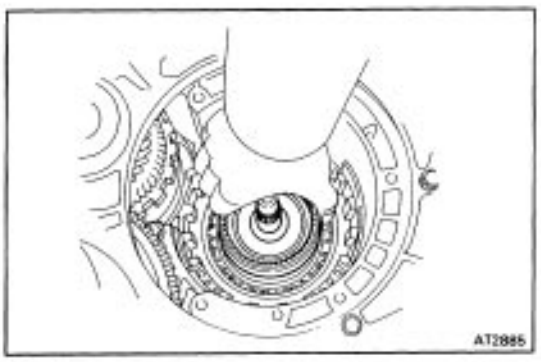

41. REMOVE REAR PLANETARY RING GEAR

(a) Remove the rear planetary ring gear with bearing and races.

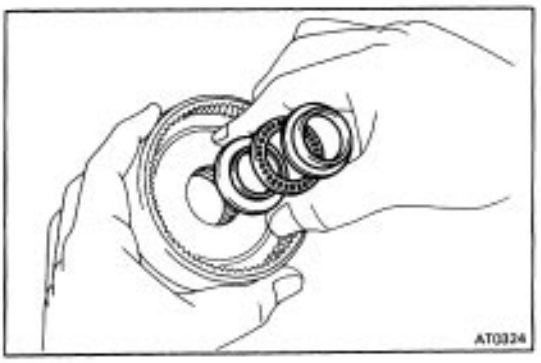

(b) Remove the bearing and races from the ring gear**.**

42. CONFIRM THAT FIRST AND REVERSE BRAKE PISTON MOVES

Using compressed air, confirm that the first and reverse brake piston moves smoothly.

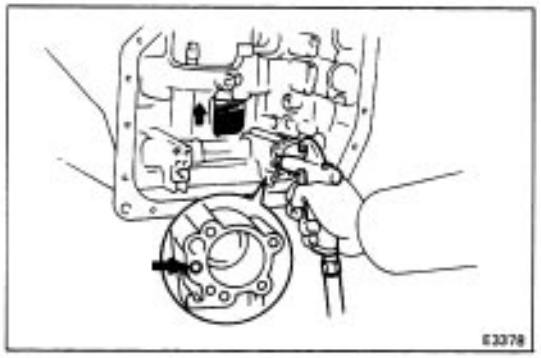

43. REMOVE SNAP RING HOLDING FLANGE TO CASE

Using a screwdriver, remove the snap ring.

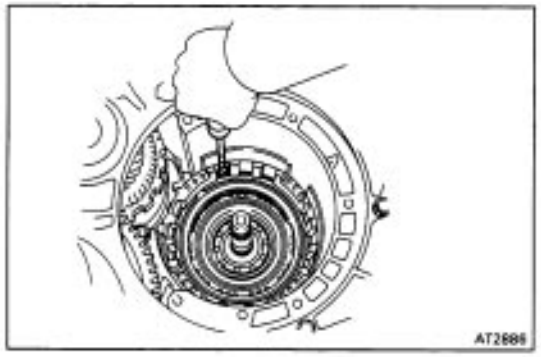

44. REMOVE FLANGES, PLATES AND DISCS

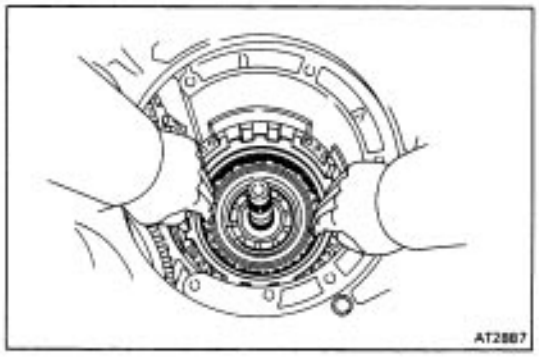

45. REMOVE TRANSAXLE REAR COVER

(a) Remove the thirteen bolts.

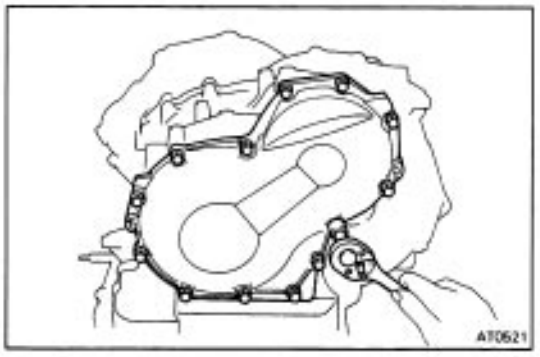

(b) Tap off the circumference of the cover with a plastic hammer to remove the cover from the transmission case, and remove the cover.

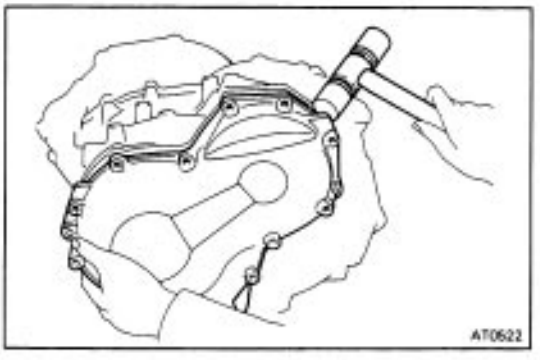

46. REMOVE INTERMEDIATE SHAFT

Remove the intermediate shaft from the transmission case.

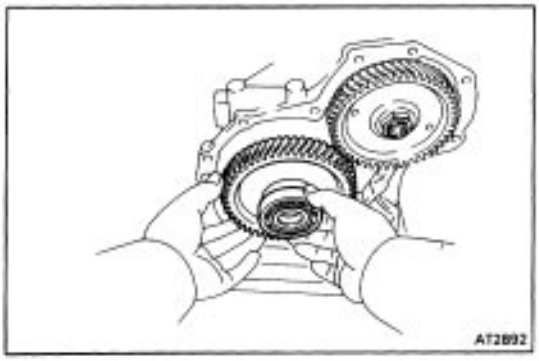

47. REMOVE SNAP RING

Using snap ring pliers, remove the snap ring.

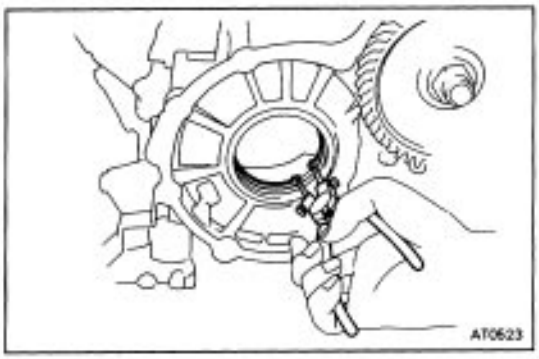

48. REMOVE SNAP RING

(a) Set SST, and tighten the bolt gradually to compress the springs until the snap ring is free from the spring seat.
SST 09350–32014 (09351–32040)

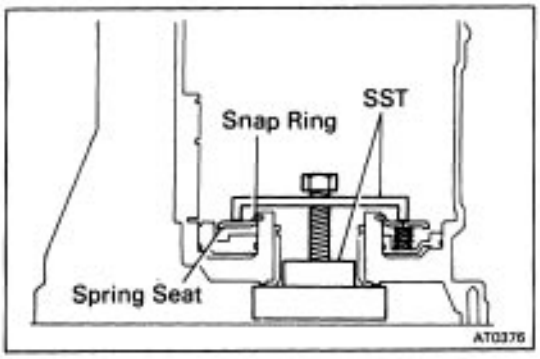

(b) Using snap ring pliers, remove the snap ring.
(c) Remove SST.
SST 09350–32014 (09351–32040)

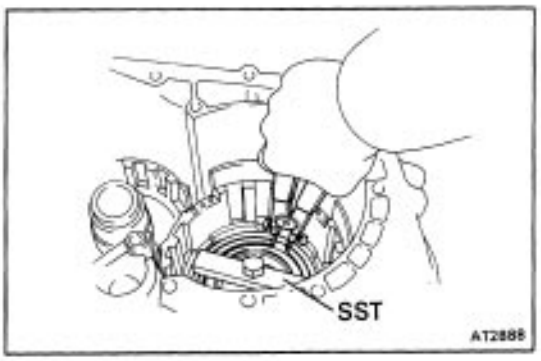

49. REMOVE RETURN SPRING

Remove the return spring and snap ring.

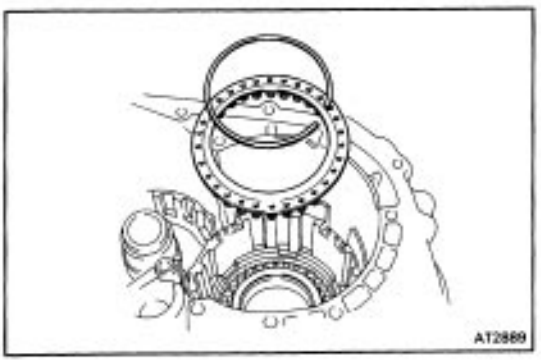

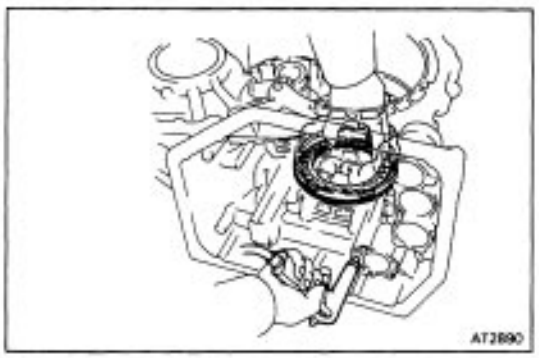

50. REMOVE PISTON FROM TRANSMISSION CASE WITH COMPRESSED AIR

(a) Apply compressed air into the oil passage of the case to remove the piston.

HINT: Hold the piston so it is not horizontal and blow with the gun slightly away from the oil hole.

(b) If the piston does not pop out with compressed air, use needle–nose pliers to remove it.

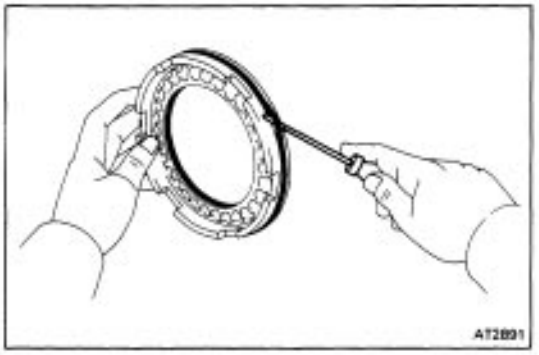

51. REMOVE O–RINGS FROM PISTON

Remove the two O–rings from the piston.

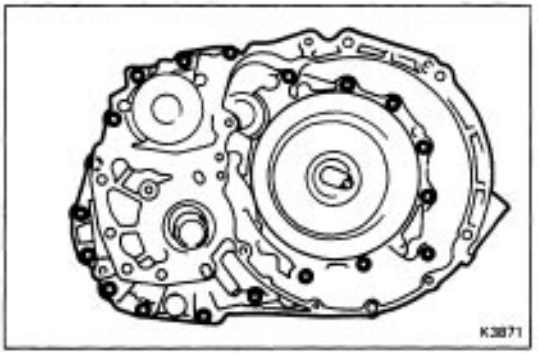

52. REMOVE TRANSAXLE HOUSING

Remove the nineteen bolts and transaxle housing.

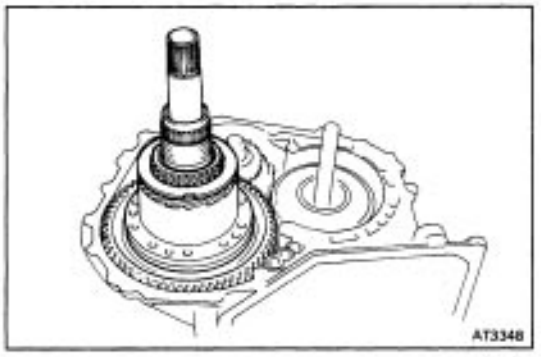

53. REMOVE DIFFERENTIAL ASSEMBLY

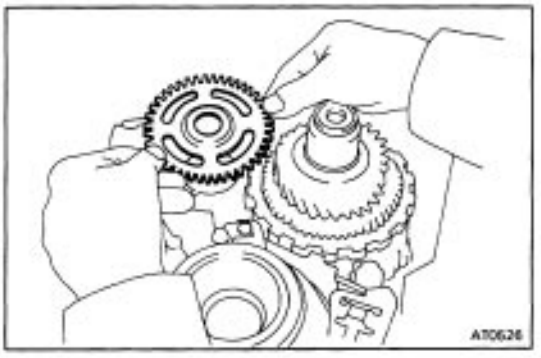

54. REMOVE GOVERNOR DRIVEN GEAR

(a) Remove the governor driven gear.

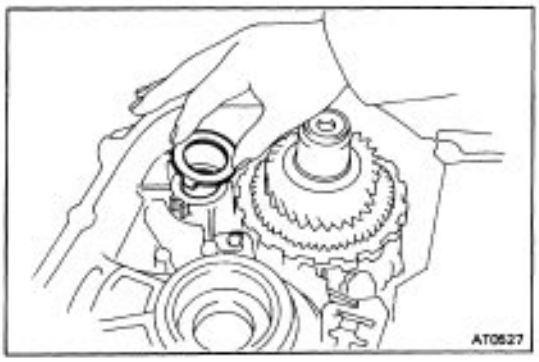

(b) Remove the thrust washer.

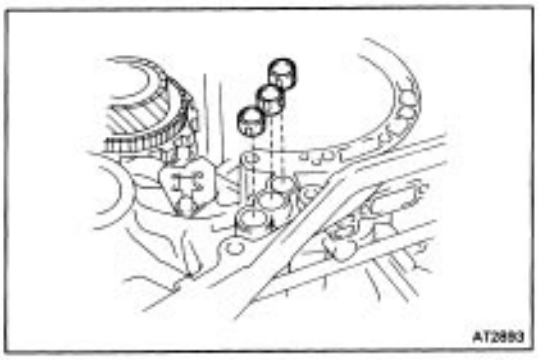

55. REMOVE APPLY GASKETS

Remove the three gaskets.

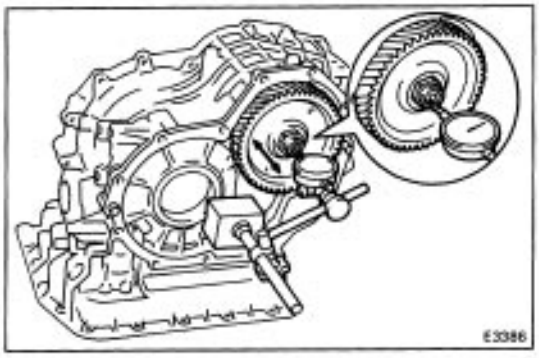

56. INSPECT COUNTER SHAFT END PLAY

Using a dial indicator, measure the end play of the counter shaft.

End play: 0.23 – 0.89 mm (0.0091 – 0.0350 in.)

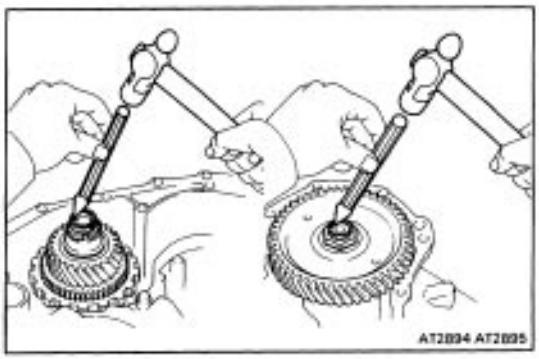

57. REMOVE COUNTER SHAFT LOCK NUTS

(a) Using a chisel and hammer, unstake the counter shaft lock nut on both sides.

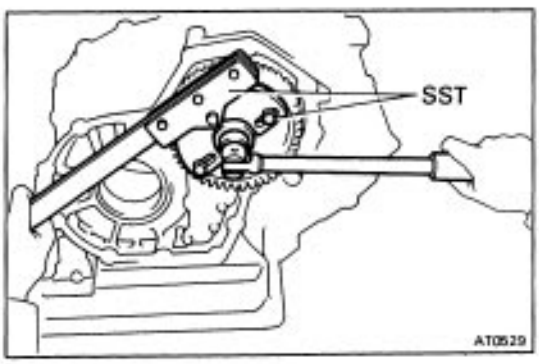

(b) Using SST, remove the lock nut of the driven gear side.

SST 09330–00021, 09350–32014 (09351–32032)

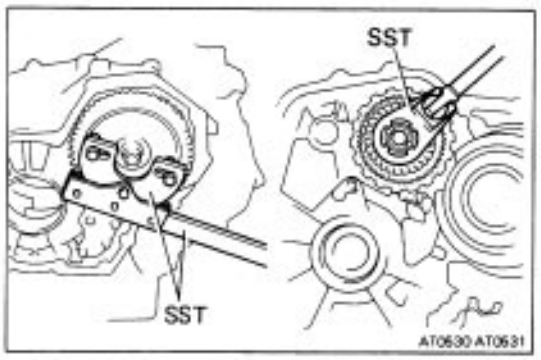

(c) Using SST to hold the driven gear, remove the lock nut of the another side.
SST 09330–00021
09350–32014 (09351–32032, 09351–32170)

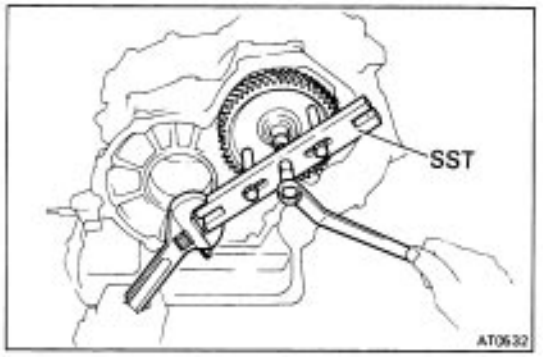

58. REMOVE COUNTER DRIVEN GEAR

Using SST, remove the driven gear.
SST 09350–32014 (09351–32061)

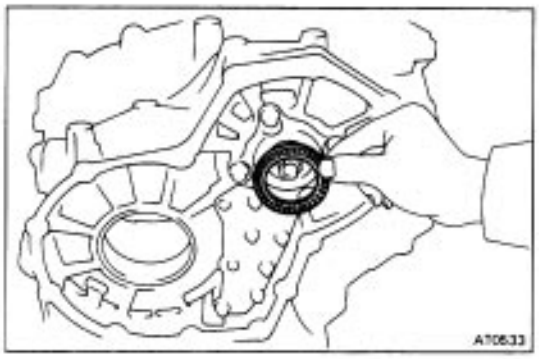

59. REMOVE THRUST NEEDLE BEARING

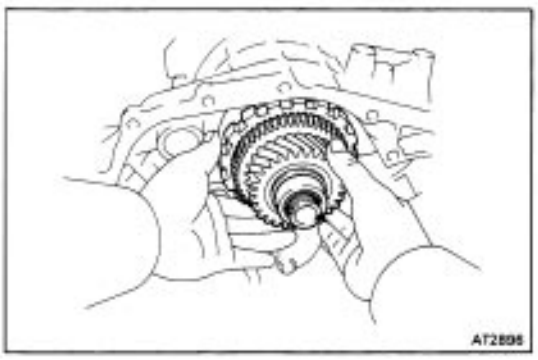

60. REMOVE COUNTER SHAFT ASSEMBLY

Pull out the counter shaft assembly.

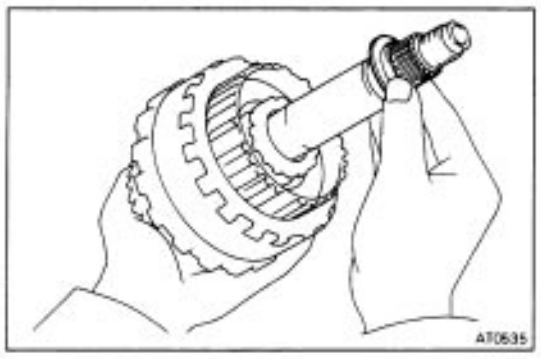

61. REMOVE THRUST BEARING WITH RACE

Remove the thrust bearing with race from the counter shaft assembly.

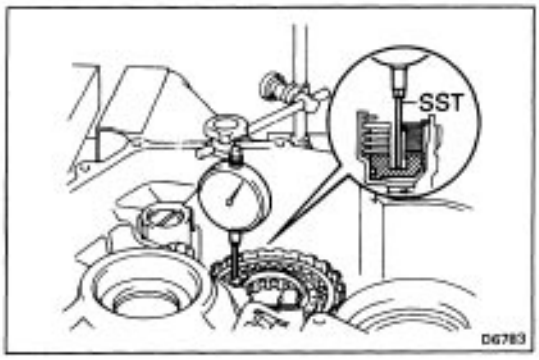

62. CHECK PISTON STROKE OF UNDERDRIVE CLUTCH

(a) Set a dial indicator (long type pick or SST) as shown.
SST 09350–32014 (09351–32190)

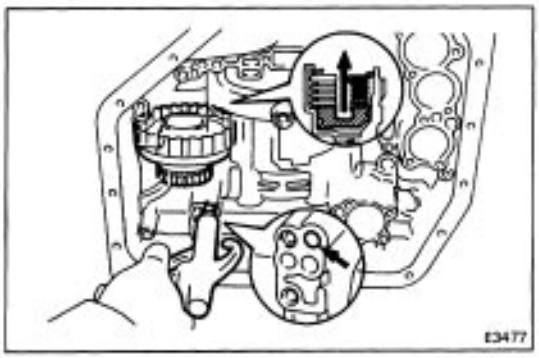

(b) Applying and releasing the compressed air (4 8 kg/cm2, 57 114 psi, 392 785 kPa), measure the underdrive clutch piston stroke.
Piston stroke: 1.50 – 1.86 mm (0.0591 – 0.0732 in.)

If the piston stroke is nonstandard, select another flange.
HINT: There are two different flange thickness.
Flange thickness: 2.04 mm (0.0803 in.)
2.40 mm (0.0945 in.)

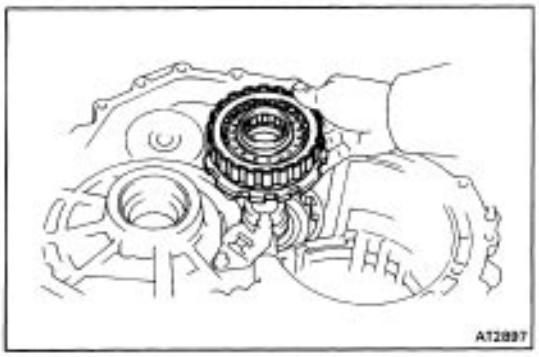

63. REMOVE UNDERDRIVE CLUTCH DRUM AND ANTI–RATTLE CLIP

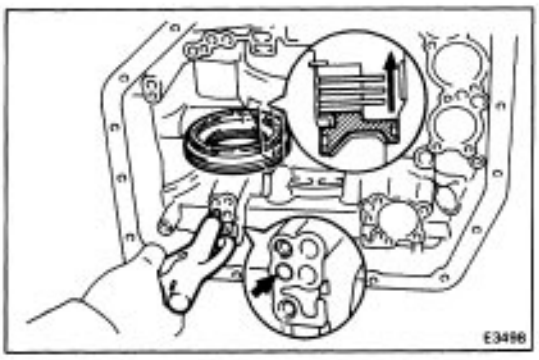

64. CONFIRM THAT UNDERDRIVE BRAKE PISTON MOVES

Using compressed air, confirm that the underdrive brake piston moves smoothly.

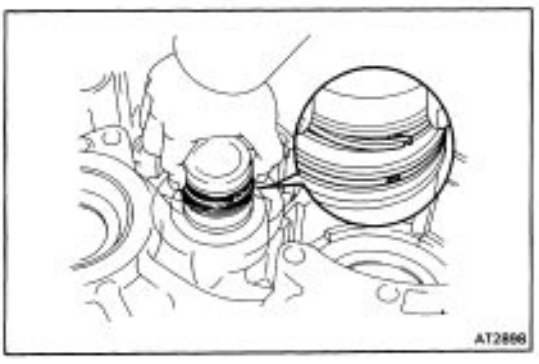

65. REMOVE OIL SEAL RINGS

Remove the two oil seal rings.

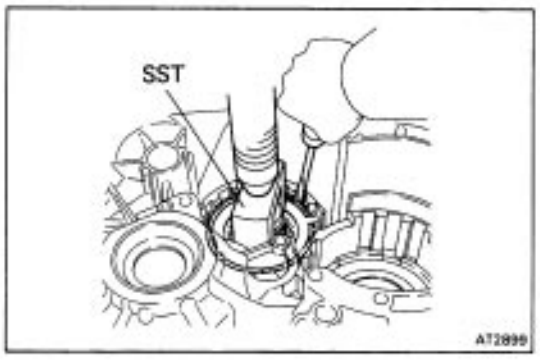

66. REMOVE FLANGE, PLATES AND DISCS

(a) Using SST and press, press in the flange until the snap ring is free from the flange.
SST 09350–32014 (09351–32070)

(b) Using a screwdriver, remove the snap ring.

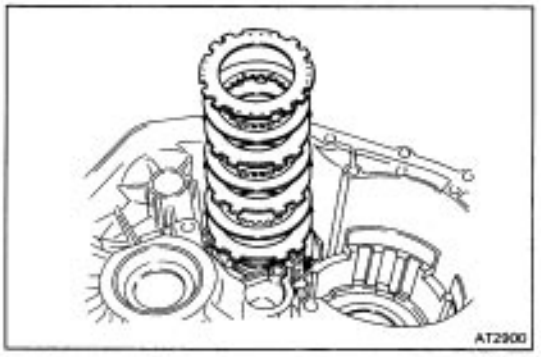

(c) Remove the flange, three plates and discs.

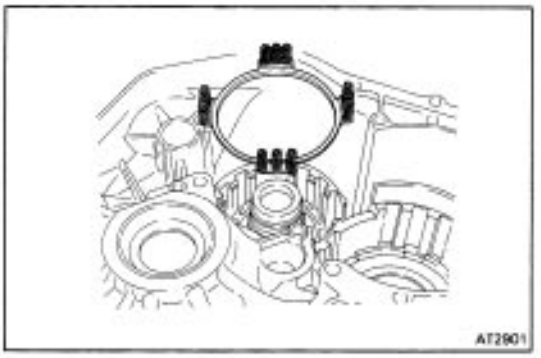

67. REMOVE RETURN SPRING

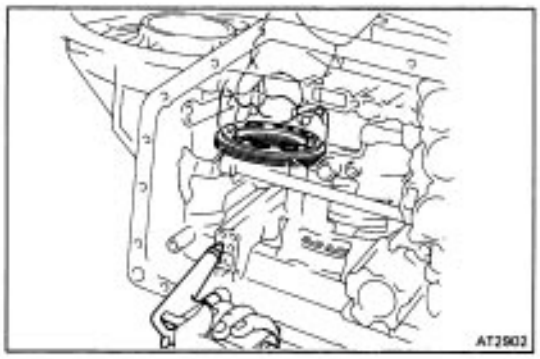

68. REMOVE UNDERDRIVE BRAKE PISTON

Using low–pressure compressed air (1 kg/cm2, 14 psi, 98 kPa), pop out the brake piston into a rag.
Force air into the hole shown and remove the brake piston.

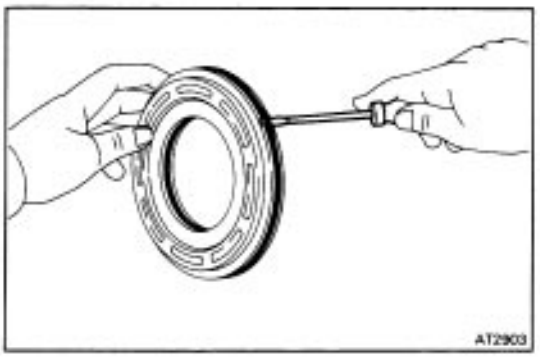

69. REMOVE O–RINGS FROM PISTON

Remove the two O–rings from the piston.

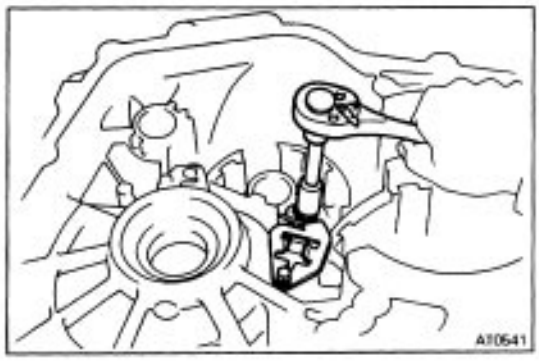

70. REMOVE PARKING LOCK PAWL STOPPER PLATE, TORSION SPRING AND SPRING GUIDE

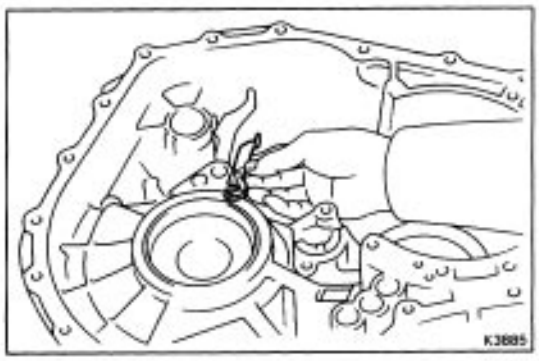

71. REMOVE PAWL SHAFT CLAMP

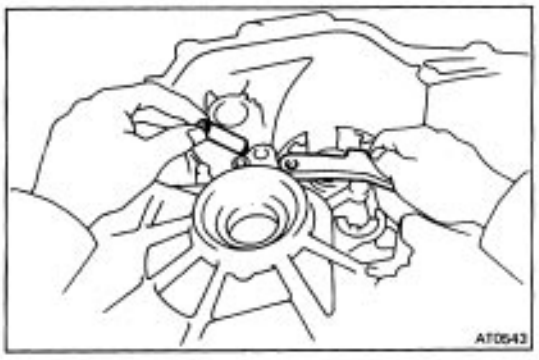

72. REMOVE PARKING LOCK PAWL SHAFT AND LOCK PAWL

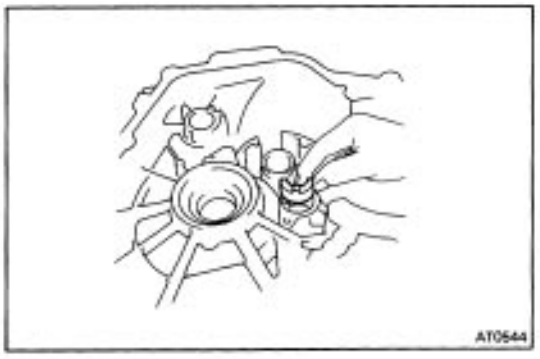

73. REMOVE PARKING LOCK SLEEVE

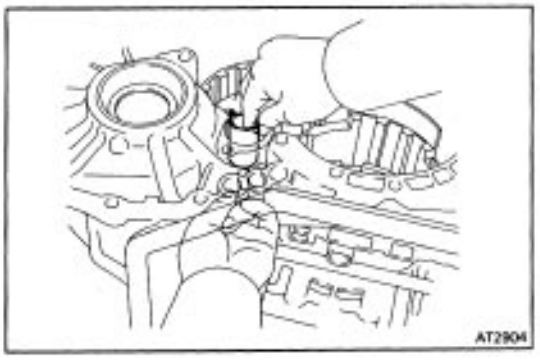

74. REMOVE CAM GUIDE BRACKET

Remove the cam guide bracket as shown.

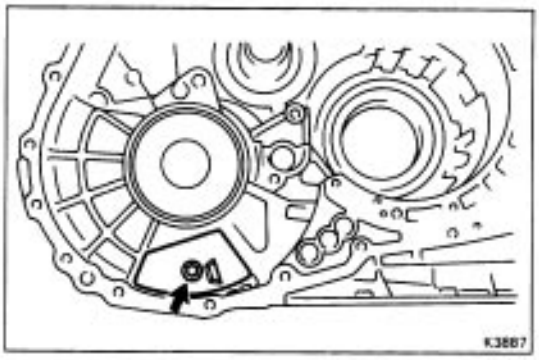

75. REMOVE TRANSMISSION CASE PLATE

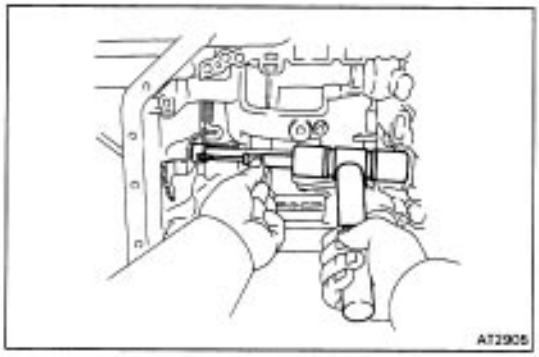

76. REMOVE MANUAL VALVE SHAFT SPACER

Using a screwdriver and hammer, unstake the spacer and remove it.

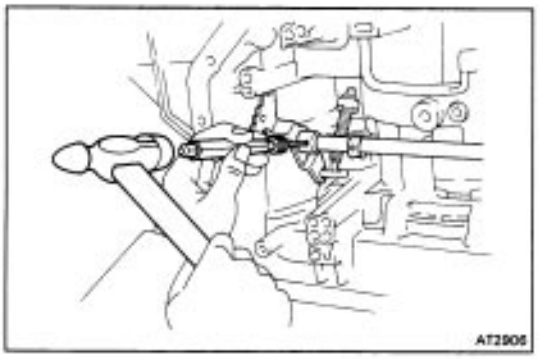

77. REMOVE PIN

Using a punch and hammer, drive out the pin.

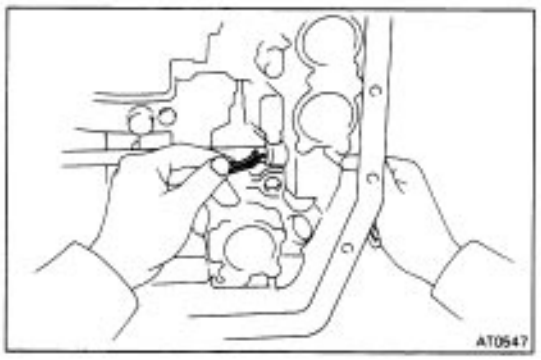

78. REMOVE MANUAL VALVE SHAFT AND LEVER

(a) Remove the retaining spring.

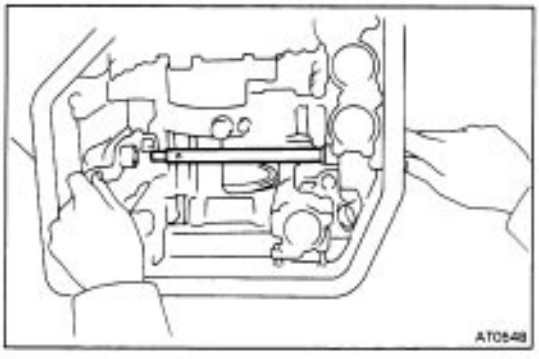

(b) Slide out the manual valve shaft and remove the manual valve lever and washer.

79. IF NECESSARY, REPLACE OIL SEAL OF MANUAL SHAFT

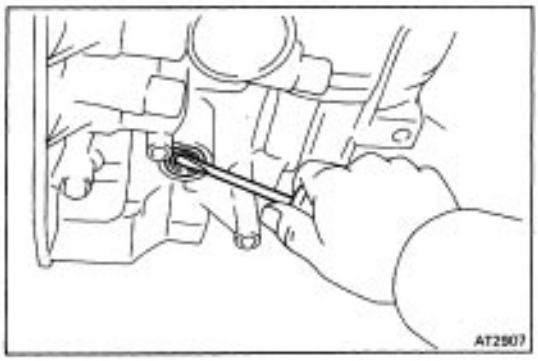

(a) Using a screwdriver, remove the oil seal.

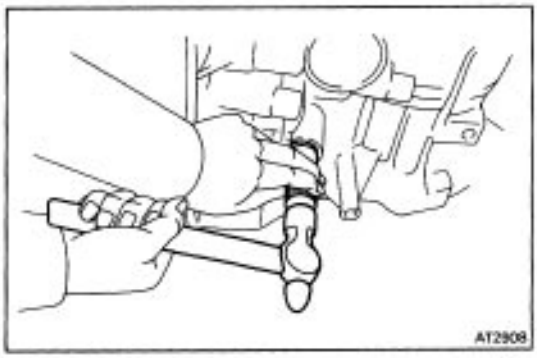

(b) Using a 14 mm socket wrench and hammer, drive in a new oil seal.
(c) Apply M P grease to the oil seal lip.

80. REMOVE OIL GALLERY COVER AND GASKET

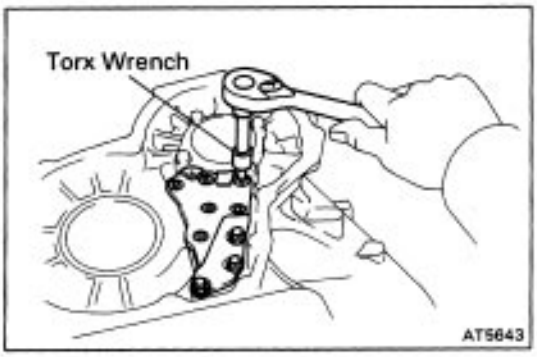

(a) Remove the six screws and three bolts.
(b) Remove the gallery cover and gasket.

81. REMOVE Ba ACCUMULATOR PISTON AND SPRING

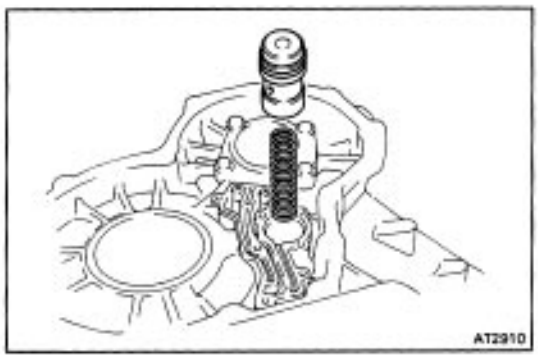

82. REMOVE BEARING

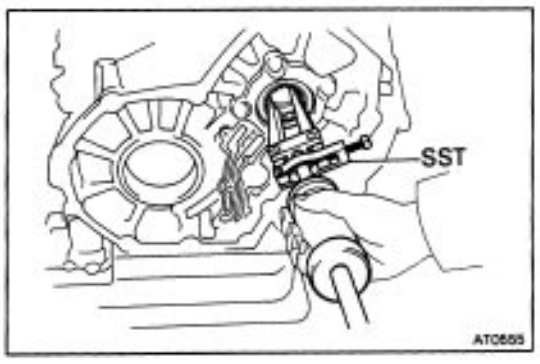

Using SST, remove the bearing.
SST 09308–00010

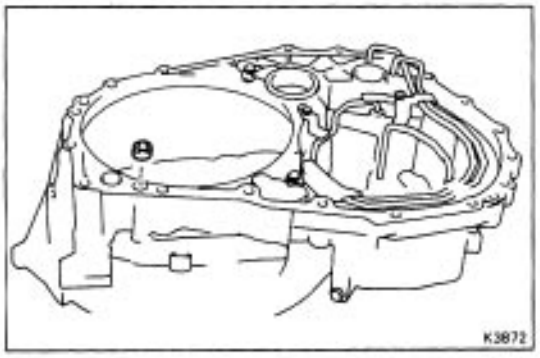

83. REMOVE APPLY GASKET

Remove the apply gasket from the transaxle housing.

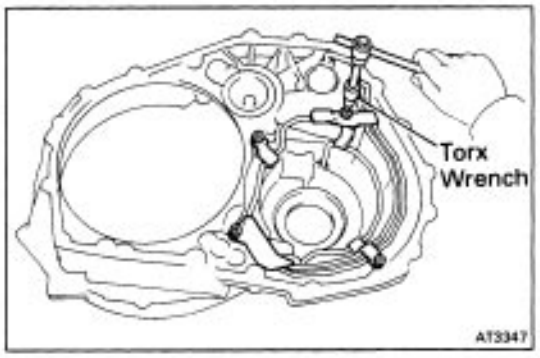

84. REMOVE OIL TUBES

(a) Using a torx wrench, remove the four tube clamps.

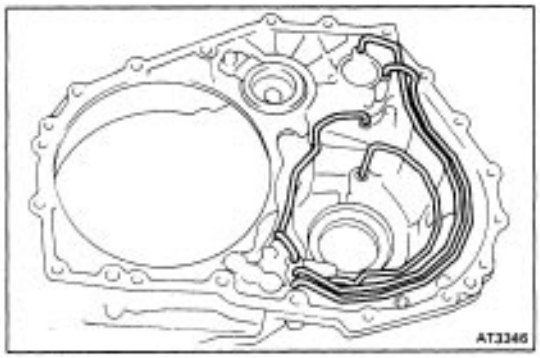

(b) Using a screwdriver, remove the four oil tubes.

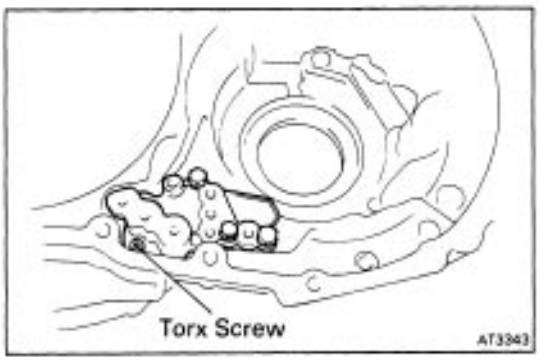

85. REMOVE OIL TUBE APPLY COVER, GASKET AND STRAINER

Remove the three bolts and a torx screw, and remove the cover and gasket.

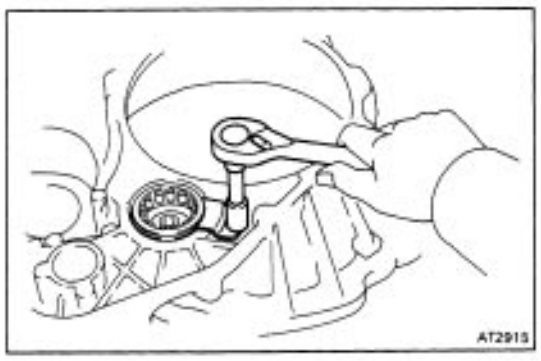

86. REMOVE THE BEARING

(a) Remove the bolt and stopper.

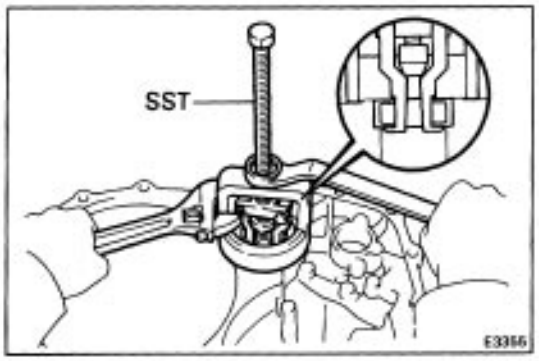

(b) Using SST, remove the bearing.
SST 09612–65014

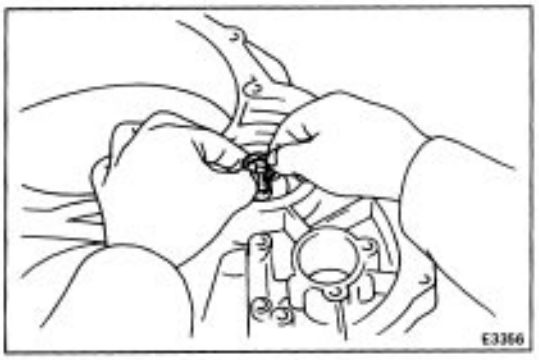

(c) Remove the oil seal ring.

COMPONENT PARTS

General Notes

The instructions here are organized so that you work on only one component group at a time.

This will help avoid confusion from similar–looking parts of different subassemblies being on your workbench at the same time.

The component groups are inspected and repaired from the converter housing side.

As much as possible, complete the inspection, repair and assembly before proceeding to the next component group. If a component group can not be assembled because parts are being ordered, be sure to keep all parts of that group in a separate container while proceeding with disassembly, inspection, repair and assembly for other component groups.

GENERAL CLEANING NOTES:

1. All disassembled parts should be washed clean with any fluid passages and holes blown through with compressed air.
2. When using compressed air to dry parts, always aim away from yourself to prevent accidentally spraying automatic transmission fluid or kerosene in your face.
3. The recommended automatic transmission fluid or kerosene should be used for cleaning.

PARTS ARRANGEMENT:

1. After cleaning, the parts should be arranged in proper order to allow efficient inspection, repairs, and reassembly.
2. When disassembling a valve body, be sure to keep each valve together with the corresponding spring.
3. New brakes and clutches that are to be used for replacement must be soaked in transmission fluid for at least two hours before assembly.

GENERAL ASSEMBLY:

1. All oil seal rings, clutch discs, clutch plates, rotating parts, and sliding surfaces should be coated with transmission fluid prior to reassembly.
2. All gaskets and rubber O–rings should be replaced.
3. Make sure that the ends of a snap ring are not aligned with one of the cutouts and are installed in the groove correctly.
4. If a worn bushing is to be replaced, the subassembly containing that bushing must be replaced.
5. Check thrust bearings and races for wear or damage. Replace if necessary.
5. Use petroleum jelly to keep parts in place.

Second Coast Brake

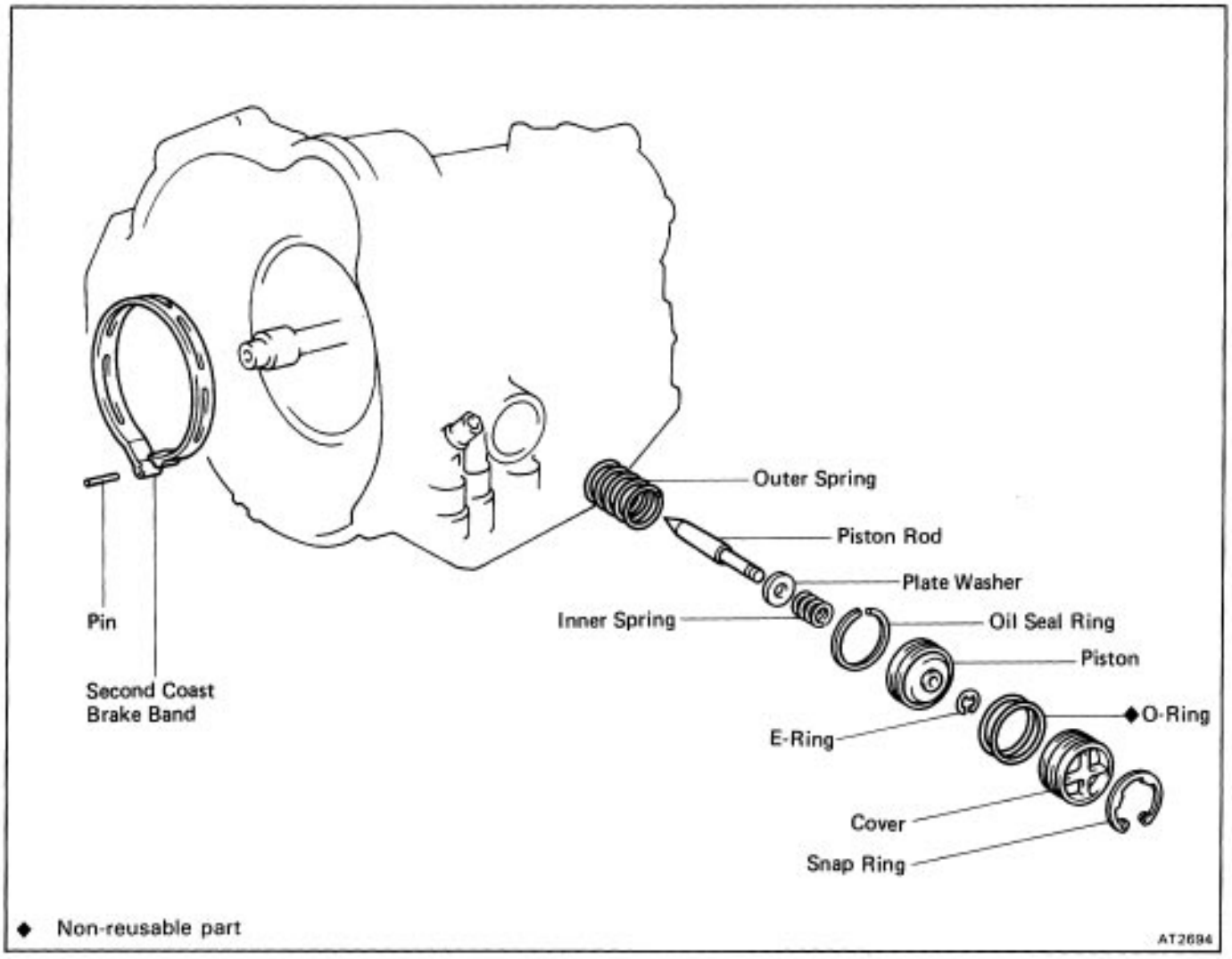

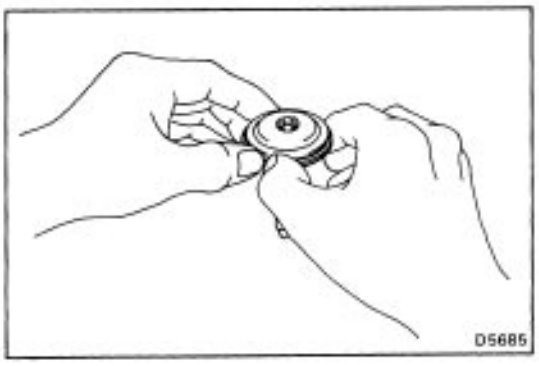

DISASSEMBLY OF SECOND COAST BRAKE PISTON

1. REMOVE OIL SEAL RING

Remove the oil seal ring from the piston.

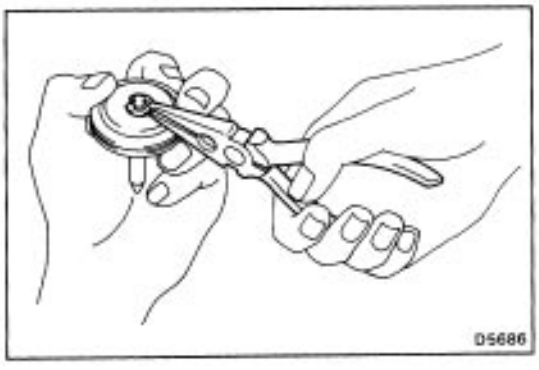

2. REMOVE PISTON ROD

(a) Remove the E–ring while pushing the piston with needle–nose pliers.

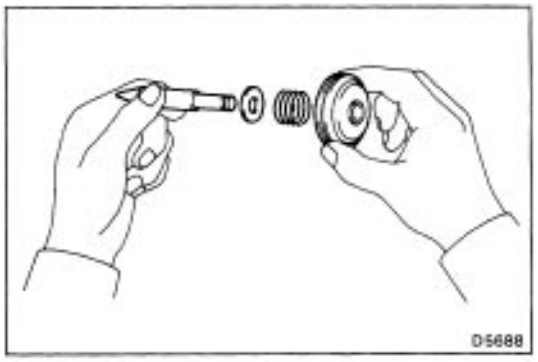

(b) Remove the spring, washer and piston rod.

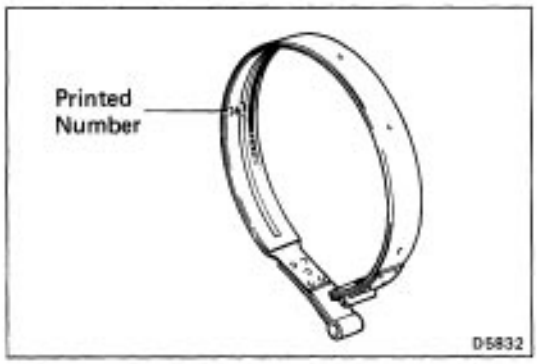

INSPECTION OF SECOND COAST BRAKE COMPONENT

INSPECT BRAKE BAND

If the lining of the brake band is exfoliated or discolored, or even part of the printed numbers are defaced, replace the brake band.

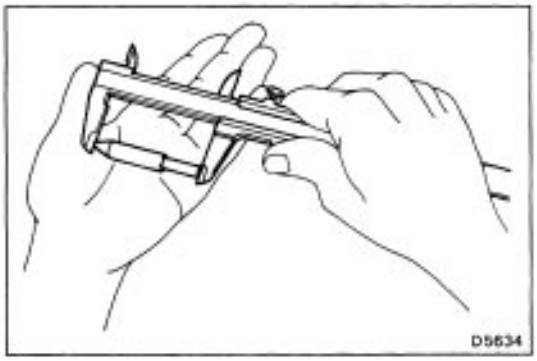

ASSEMBLY OF SECOND COAST BRAKE PISTON

1. SELECT PISTON ROD

If the band is OK with piston stroke not within the standard value, select the piston rod.

There are two lengths of piston rod.

Piston rod length: 72.9 mm (2.870 in.)

71.4 mm (2.811 in.)

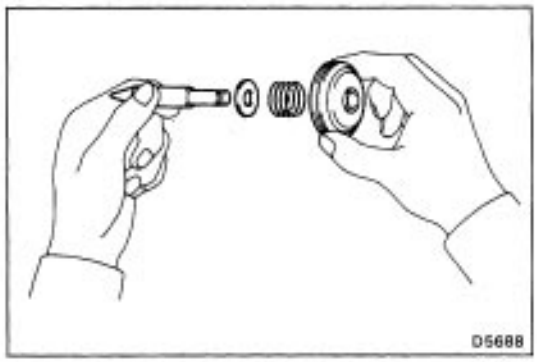

2. INSTALL PISTON ROD

(a) Install the washer and spring to the piston rod.

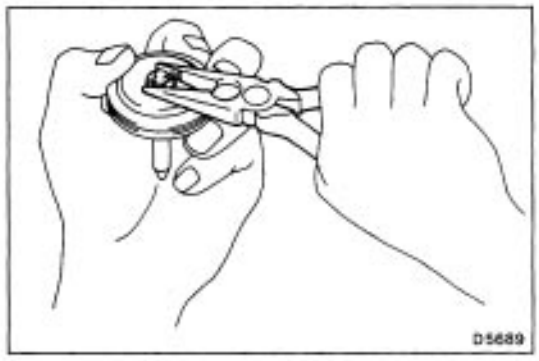

(b) Install a E–ring while pushing the piston.

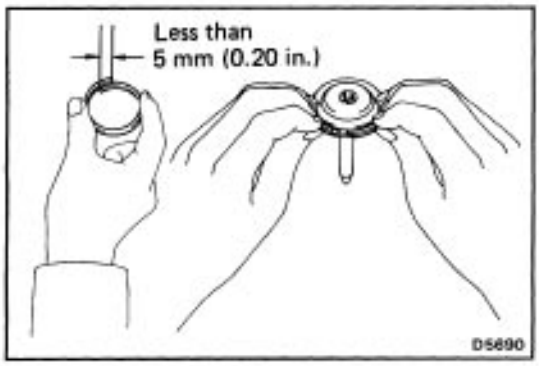

3. INSTALL OIL SEAL RING

(a) Apply ATF to the oil seal ring.

(b) Install the oil seal ring to the piston.

NOTICE: Do not spread the ring ends more than necessary.

Oil Pump

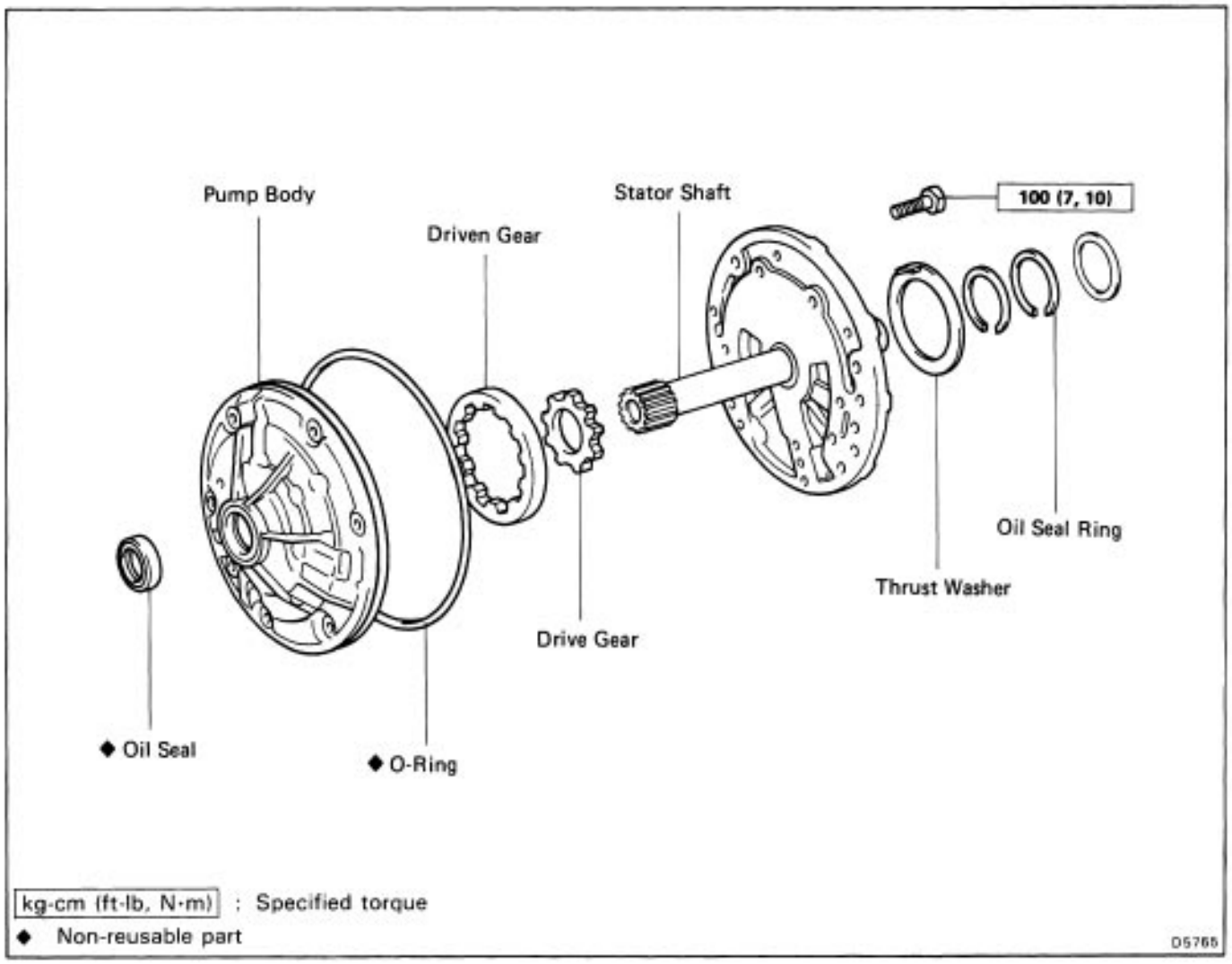

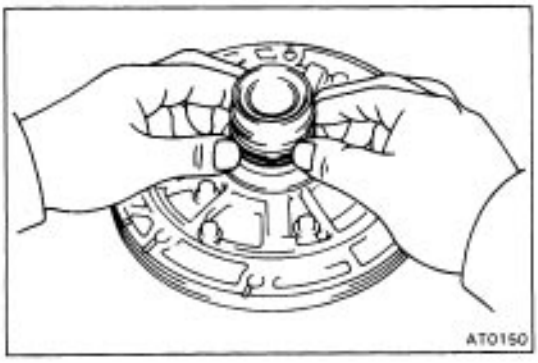

DISASSEMBLY OF OIL PUMP

1. REMOVE OIL SEAL RINGS

Remove the two oil seal rings from the stator shaft back side.

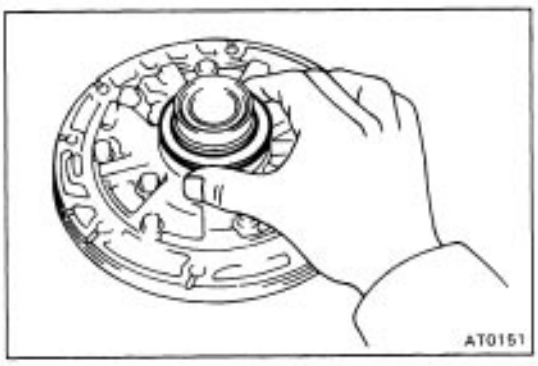

2. REMOVE THRUST WASHER FROM STATOR SHAFT BACK SIDE

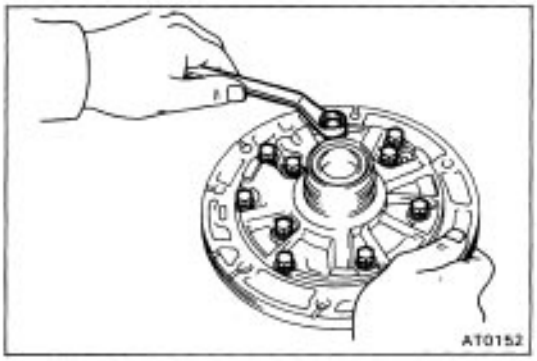

3. REMOVE STATOR SHAFT

Remove the eleven bolts and stator shaft. Keep the gears in assembly order.

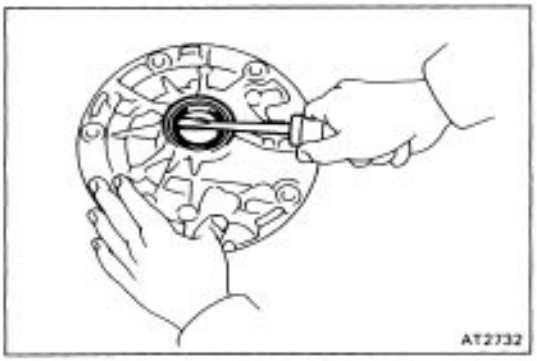

4. REMOVE FRONT OIL SEAL

Pry off the oil seal with a screwdriver.

INSPECTION OF OIL PUMP



1. CHECK BODY CLEARANCE OF DRIVEN GEAR

Push the driven gear to one side of the body.
Using a feeler gauge, measure the clearance.

Standard body clearance: 0.07 – 0.15 mm
(0.0028 – 0.0059 in.)

Maximum body clearance: 0.3 mm (0.012 in.)Z

If the body clearance is greater than the maximum, replace the oil pump body subassembly.

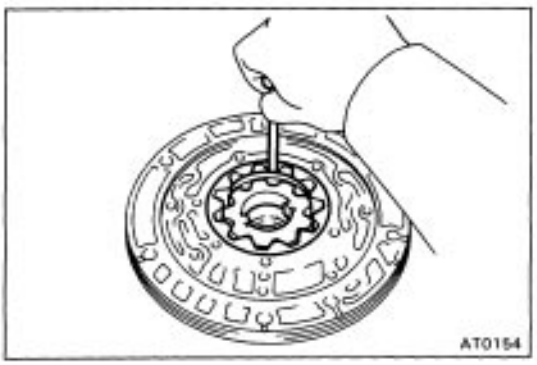

2. CHECK TIP CLEARANCE OF DRIVEN GEAR

Measure between the driven gear teeth and the crescent shaped part of the pump body.

Standard tip clearance: 0.11 – 0.14 mm
(0.0043 – 0.0055 in.)

Maximum tip clearance: 0.3 mm (0.012 in.)

If the tip clearance is greater than the maximum, replace the oil pump body subassembly.

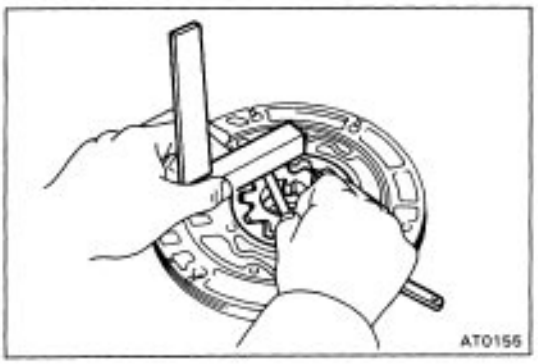

3. CHECK SIDE CLEARANCE OF BOTH GEARS

Using a steel straightedge and a feeler gauge, measure the side clearance of both gears.

Standard side clearance: 0.02 – 0.05 mm
(0.0008 – 0.0020 in.)

Maximum side clearance: 0.1 mm (0.004 in.)

There are three different thicknesses for drive and driven gears.

Drive and driven gear thickness:

Mark Thickness

A 9.440 – 9.456 mm (0.3717 – 0.3723 in.)

B 9.456 – 9.474 mm (0.3723 – 0.3730 in.)

C 9.474 – 9.490 mm (0.3730 – 0.3736 in.)

If the thickest gear can not make the side clearance within standard specification, replace the oil pump body subassembly.

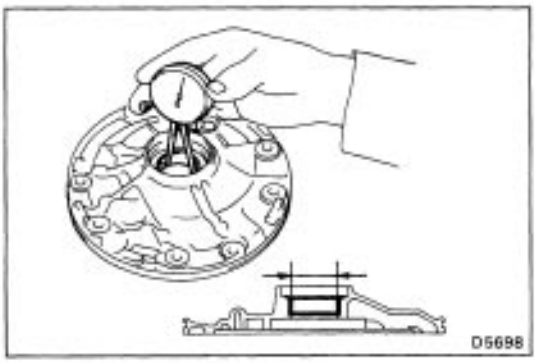

4. CHECK OIL PUMP BODY BUSHING

Using a dial indicator, measure the inside diameter of the oil pump body bushing.

Maximum inside diameter: 38.18 mm (1.5031 in.)

If the inside diameter is greater than the maximum, replace the oil pump body subassembly.

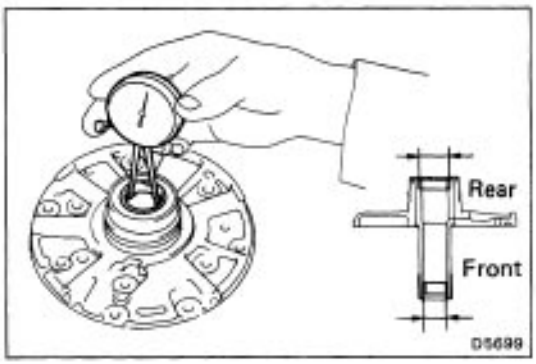

5. CHECK STATOR SHAFT BUSHINGS

Using a dial indicator, measure the inside diameter of the stator shaft bushings.

Maximum inside diameter:

Front side 21.57 mm (0.8492 in.)

Rear side 27.07 mm (1.0657 in.)

If the inside diameter is greater than the maximum, replace the stator shaft.

ASSEMBLY OF OIL PUMP

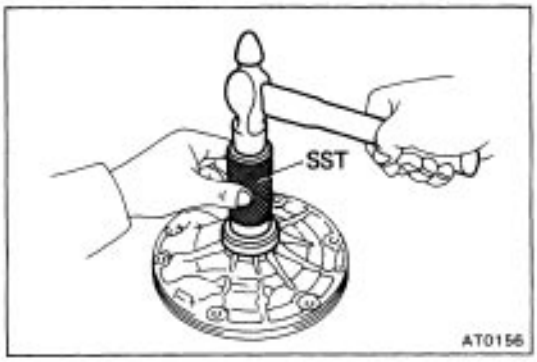

1. INSTALL FRONT OIL SEAL

Using SST and a hammer, install a new oil seal. The seal end should be flush with the outer edge of the pump body.

SST 09350–32013 (09351–32140)



2. INSTALL DRIVEN GEAR AND DRIVE GEAR

Make sure the top of the gears are facing upward.

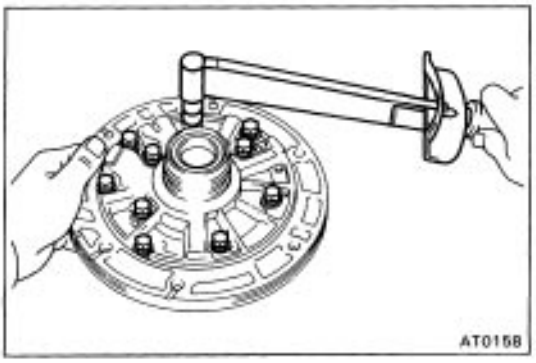

3. INSTALL STATOR SHAFT TO PUMP BODY

(a) Align the stator shaft with each bolt hole.

(b) Torque the eleven bolts.

Torque: 100 kg–cm (7 ft–lb, 10 N–m)

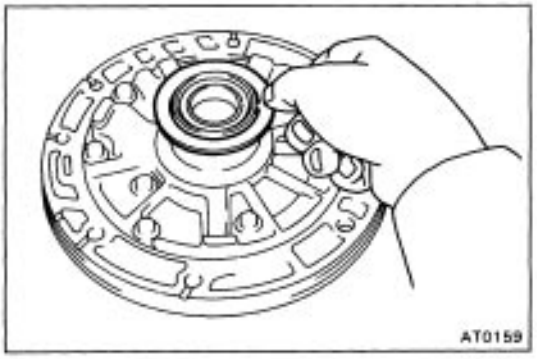

4. INSTALL THRUST WASHER

(a) Coat the thrust washer with petroleum jelly.

(b) Align the tab of the washer with the hollow of the pump body.

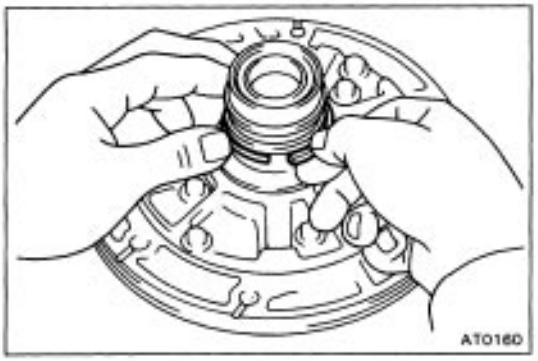

5. INSTALL OIL SEAL RINGS

Install the two oil seal rings to the stator shaft back side.

NOTICE: Do not spread the ring ends more than necessary.

HINT: After installing the oil seal rings, check that they move smoothly.

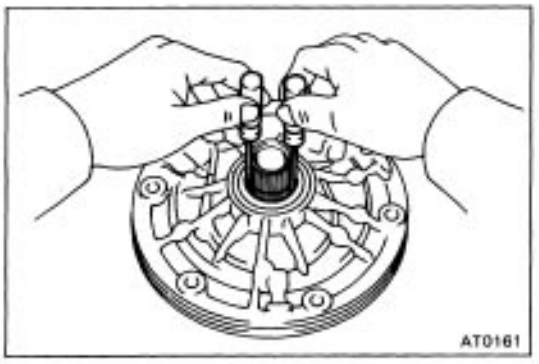

6. CHECK PUMP DRIVE GEAR ROTATION

Turn the drive gear with two screwdrivers and make sure it rotates smoothly.

NOTICE: Be careful not to damage the oil seal lip.

Direct Clutch

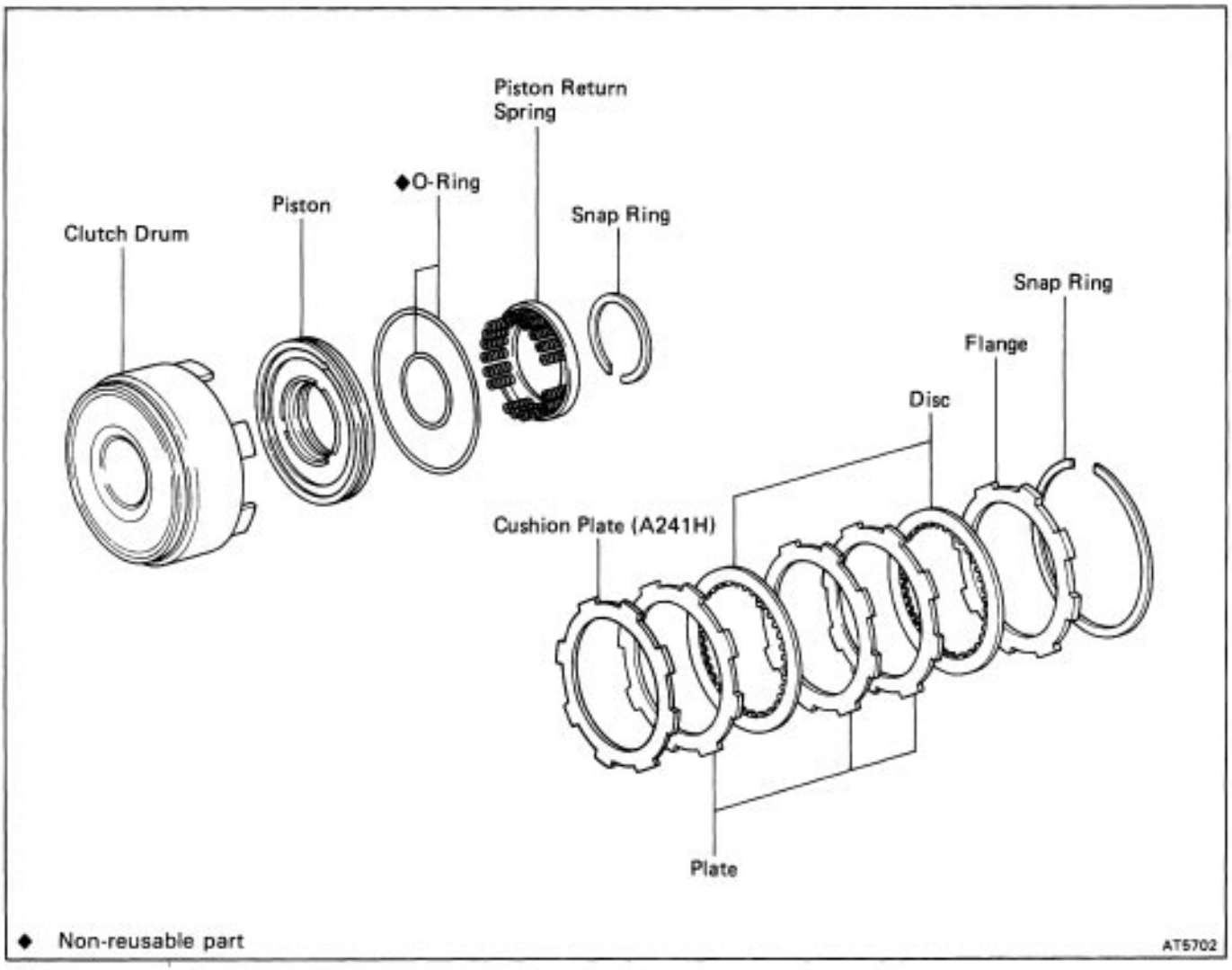

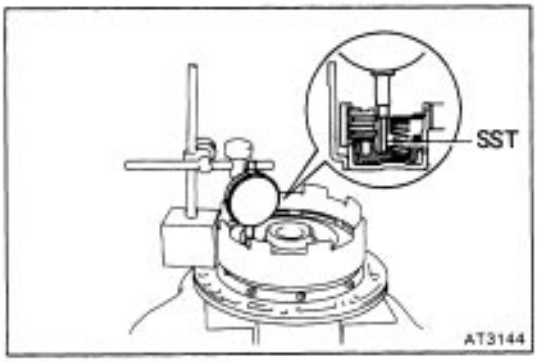

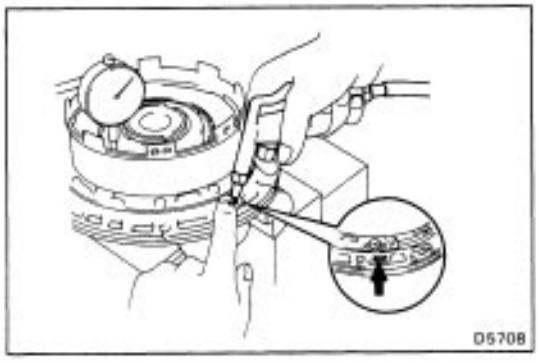

DISASSEMBLY OF DIRECT CLUTCH

1. CHECK PISTON STROKE OF DIRECT CLUTCH

(a) Install the direct clutch on the oil pump.

(b) Using a dial indicator (long type pick or SST), measure the direct clutch piston stroke applying and releasing the compressed air (4 – 8 kg/cm2, 57 – 114 psi, 392 – 785 kPa) as shown.
SST 09350–32014 (09351–32190)

Piston stroke: A 131 L, A240L 1.37 – 1.70 mm (0.0539 – 0.0669 in.)
A241 H 1.13 – 1.50 mm (0.0445 – 0.0591 in.)

If the piston stroke is greater than the maximum inspect the each component.

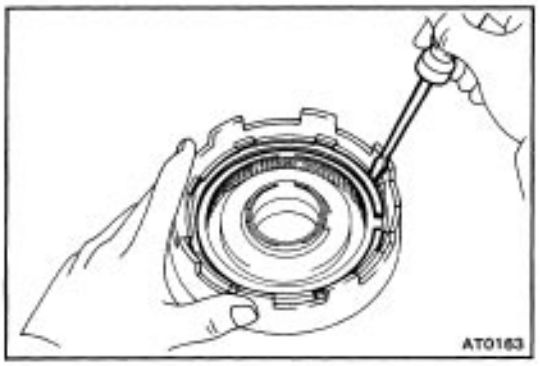

2. REMOVE SNAP RING FROM CLUTCH DRUM

3. REMOVE FLANGE, DISCS AND PLATES

4. (A241H)

REMOVE CUSHION PLATE

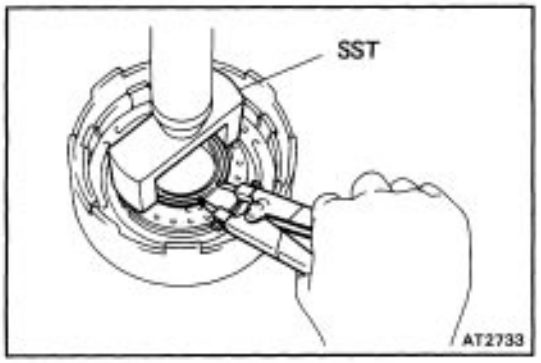

5. REMOVE PISTON RETURN SPRING

(a) Place SST on the spring retainer and compress the springs with a shop press.
SST 09350–32014 (09351–32070)
1by Remove the snap ring with the snap ring pliers.

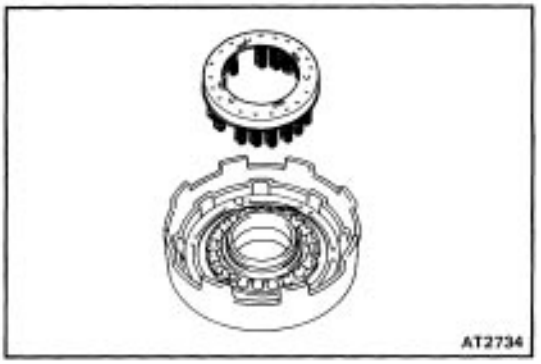

(c) Remove the piston return spring.

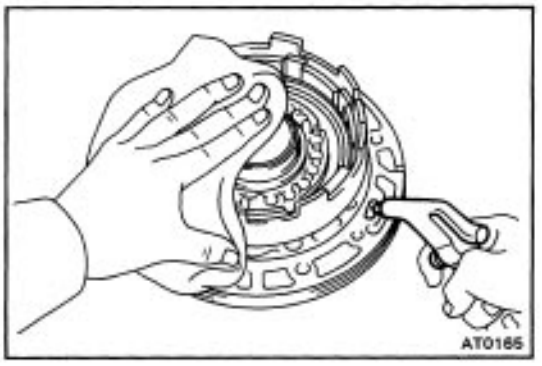

6. REMOVE CLUTCH PISTON

(a) Install the direct clutch onto the oil pump.
(b) Apply compressed air to the oil pump to remove the piston. (If the piston does not come out completely, use needle–nose pliers to remove it.)
(e) Remove the direct clutch from the oil pump.

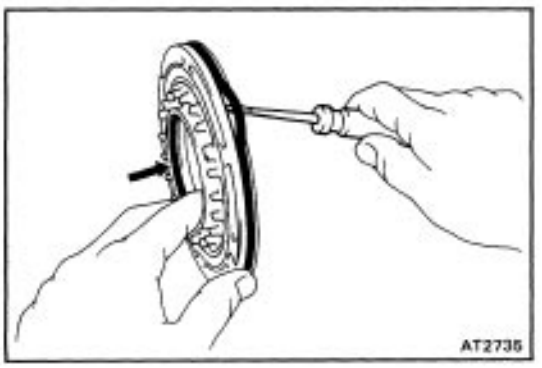

(d) Remove the two O–rings from the piston.

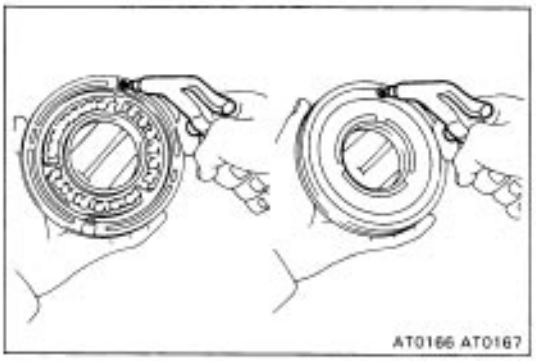

INSPECTION OF DIRECT CLUTCH

1. INSPECT CLUTCH PISTON

(a) Check that the check ball is free by shaking the piston.

(b) Check that the valve does not leak by applying low pressure compressed air.

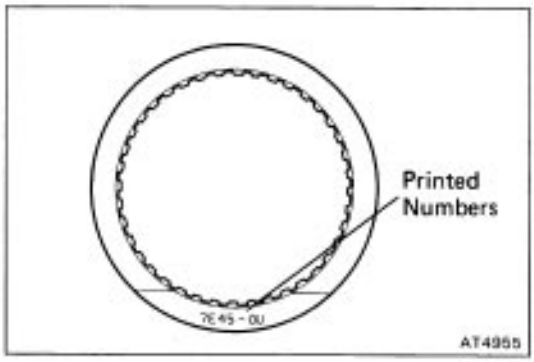

2. INSPECT DISC, PLATE AND FLANGE

Check that the sliding surface of disc, plate and flange worn are or burnt. If necessary, replace them.

HINT:

- If the lining of the disc is exfoliated or discolored, or even a part of the printed number is defaced, replace all discs.
- Before assembling new discs, soak them in ATF for at least two hours.

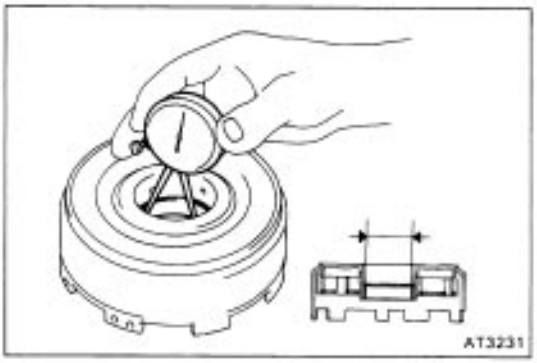

3. CHECK DIRECT CLUTCH BUSHING

Using a dial indicator, measure the inside diameter of the direct clutch bushing.

Maximum inside diameter: 47.07 mm (1.8531 in.)

If the inside diameter is greater than the maximum, replace the direct clutch.

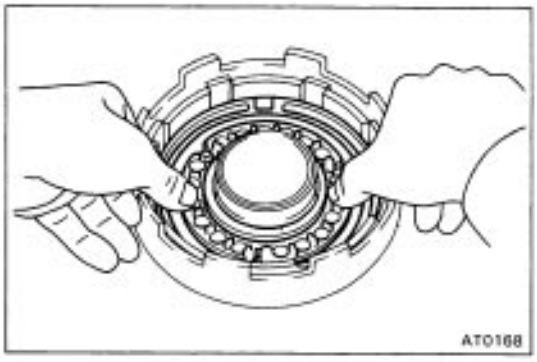

ASSEMBLY OF DIRECT CLUTCH

1. INSTALL CLUTCH PISTON IN DIRECT CLUTCH DRUM

(a) Install new O–rings to the piston. Coat the 0– rings with ATF.

(b) Being careful not to damage the O–rings, press the piston into the drum with the cup side up.

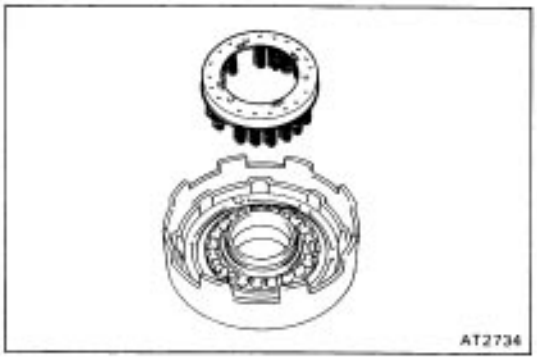

2. INSTALL PISTON RETURN SPRING

(a) Place the return spring and snap ring onto the piston.

(b) Place SST on the return spring, and compress the return spring with a shop press.
SST 09350–32014 (09351–32070)

(c) Install the snap ring with the snap ring pliers. Be sure the end gap of snap ring is not aligned with the spring retainer claw.

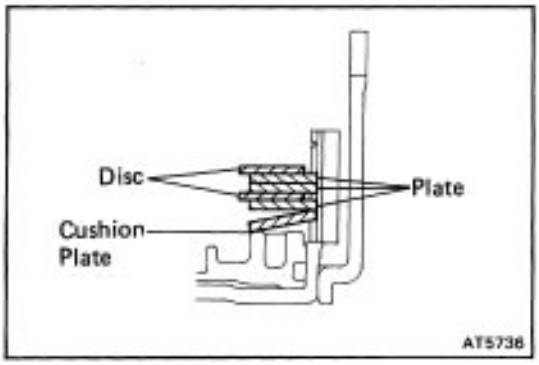

3. INSTALL CUSHION PLATE ROUNDED END DOWN

4. INSTALL PLATES, DISCS AND FLANGE

(a) Install plates and discs.

Install in order: P =Plate D =Disc

P – D – P – P – D

(b) Install the flange with the flat end facing downward.

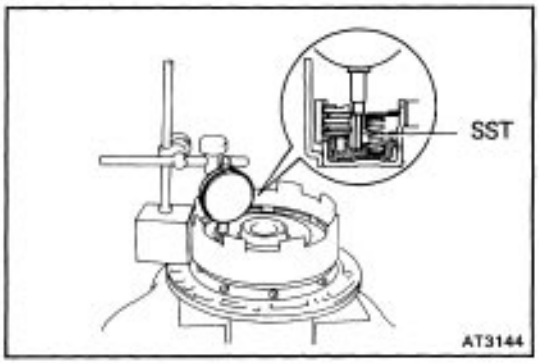

5. INSTALL SNAP RING

Check that the end gap of the snap ring is not aligned with one of the cutouts.

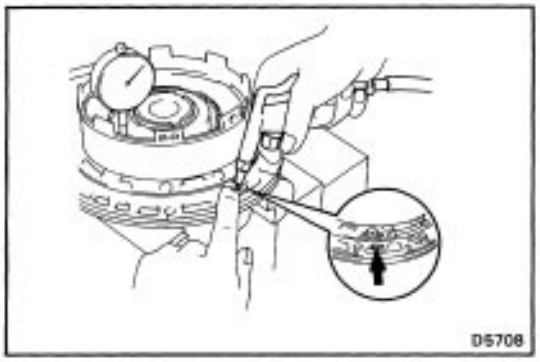

6. RECHECK PISTON STROKE OF DIRECT CLUTCH

(a) Install the direct clutch on the oil pump.

(b) Using a dial indicator (long type pick or SST), measure the direct clutch piston stroke applying and releasing the compressed air (4 – 8 kg /km2, 57 – 114 psi, 392 – 785 kPa) as shown.

SST 09350–32014 (09351–32190)

Piston stroke: A 131 L, A240L 1.37 – 1.70 mm

(0.0539 – 0.0669 in.)

A241 H 1.13 – 1.50 mm

(0.0445 – 0.0591 in.)

If the piston stroke is nonstandard, select another flange.

HINT: There are two different thicknesses for the flange.

Flange thickness: 3.00 mm (0.1181 in.)

3.37 mm (0.1327 in.)

Forward Clutch

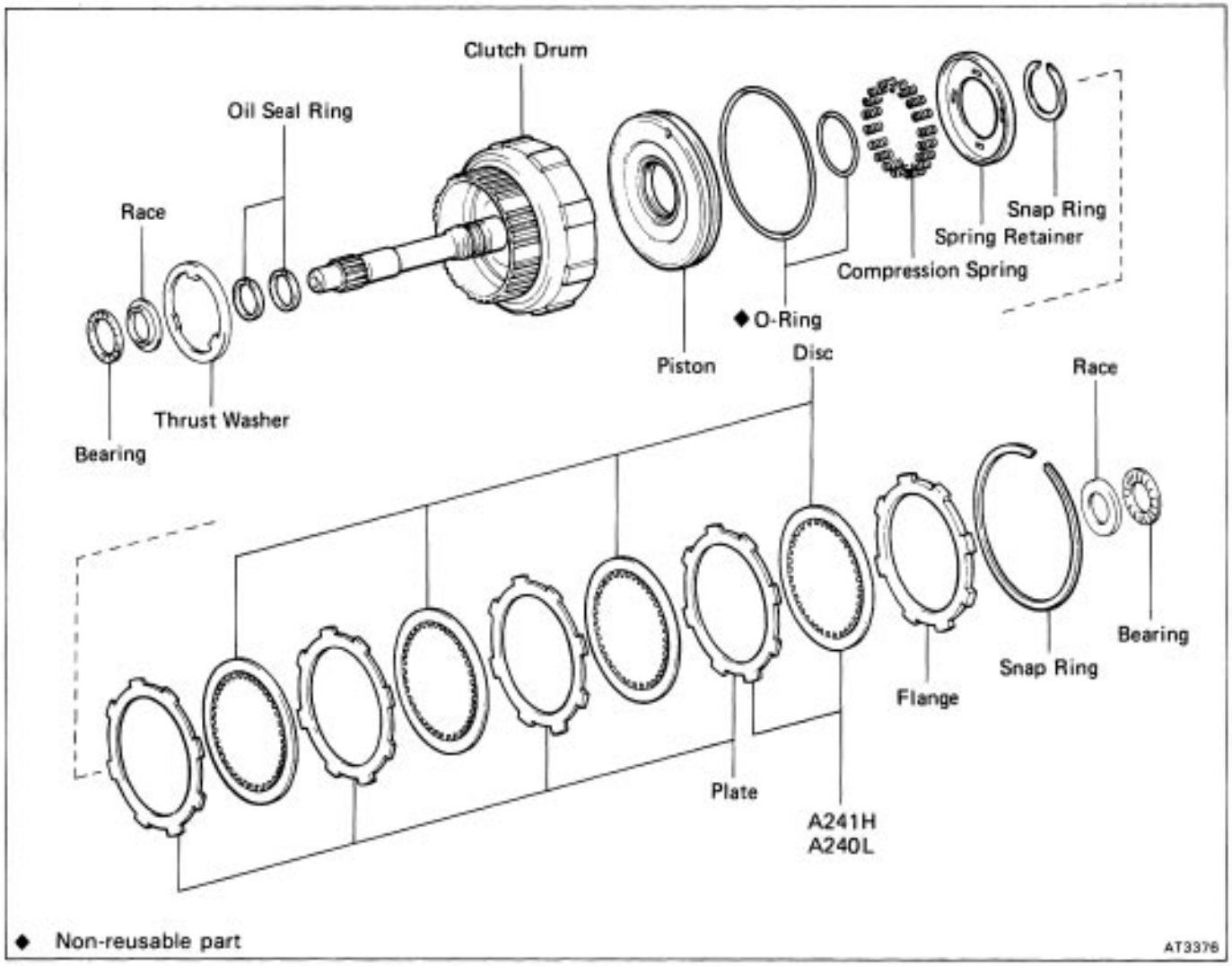

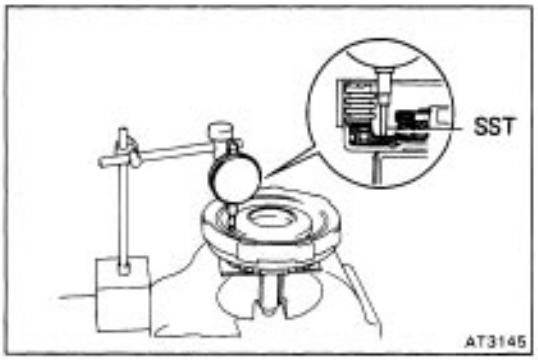

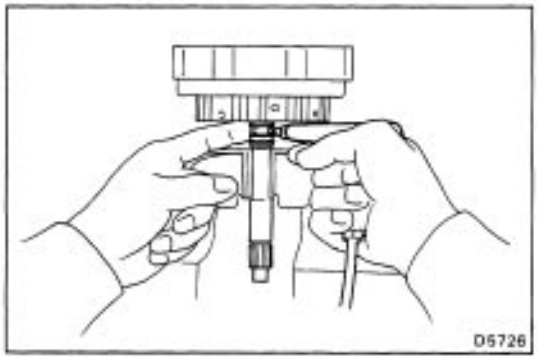

DISASSEMBLY OF FORWARD CLUTCH

1. CHECK PISTON STROKE OF FORWARD CLUTCH

Using a dial indicator (long type pick or SST), measure the forward clutch piston stroke applying and releasing the compressed air (4 – 8 kg/cm2, 57 – 114 psi, 392 – 785 kPa) as shown.
SST 09350–32014 (09351–32190)

Piston stroke:

A131L 1.11–1.47 mm
(0.0437–0.0579 in.)

A241 H, A240L 1.42–1.81 mm
(0.0559–0.0713 in.)

If the piston stroke is greater than the maximum inspect the each component.

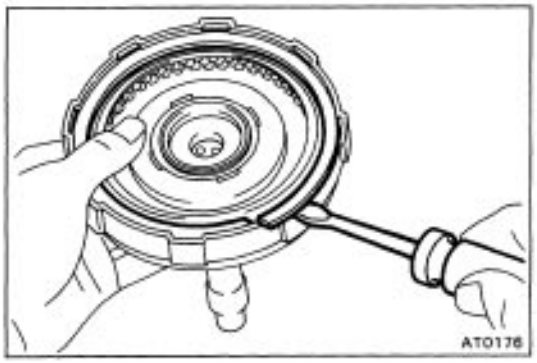

2. REMOVE SNAP RING FROM CLUTCH DRUM

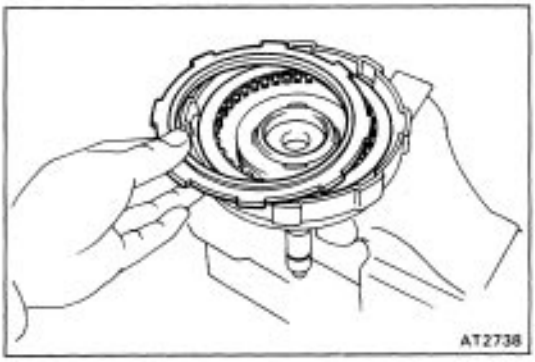

3. REMOVE FLANGE, DISCS AND PLATES

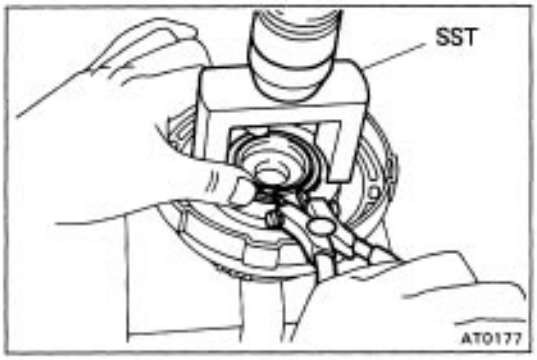

4. REMOVE RETURN SPRINGS

(a) Place SST on the spring retainer and compress the springs with a shop press.
SST 09350–32014 (09351–32070)

(b) Remove the snap ring with the snap ring pliers.

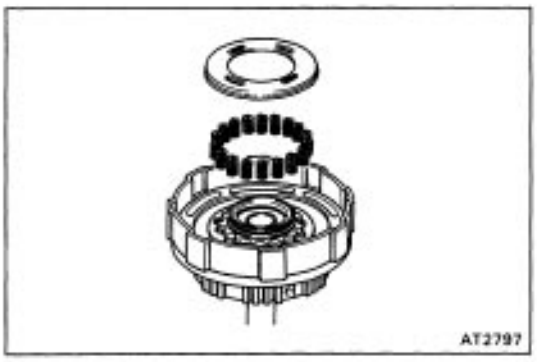

(c) Remove the spring retainer and eighteen return springs.

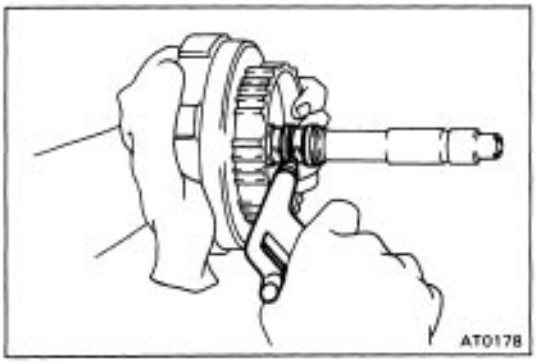

5. REMOVE CLUTCH PISTON

(a) Apply compressed air into the oil passage to remove the piston.
If the piston does not come out, use needle–nose pliers to remove it.

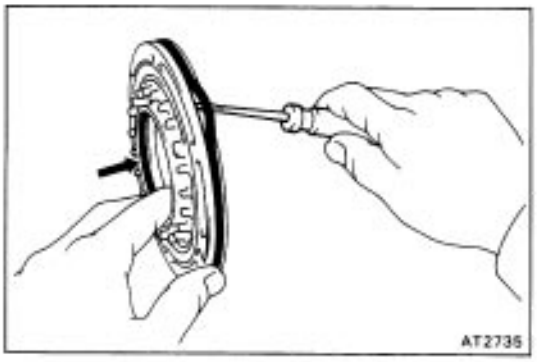

(b) Remove the two O–rings from the piston.

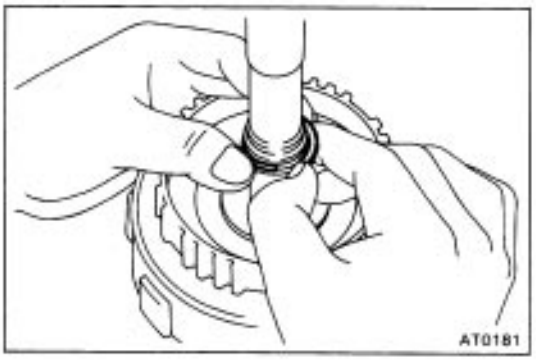

6. IF NECESSARY, REMOVE OIL SEAL RINGS

Remove the two oil seal rings from the shaft.

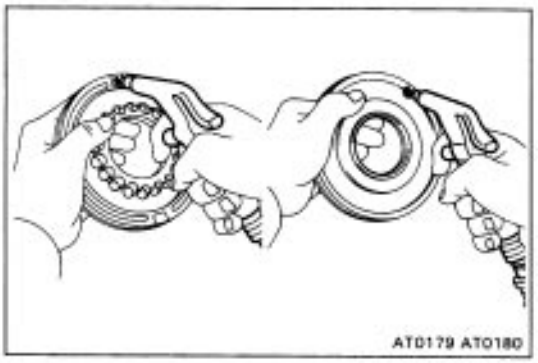

INSPECTION OF FORWARD CLUTCH

1. INSPECT CLUTCH PISTON

(a) Check that the check ball is free by shaking the piston.

(b) Check that valve does not leak by applying low pressure compressed air.

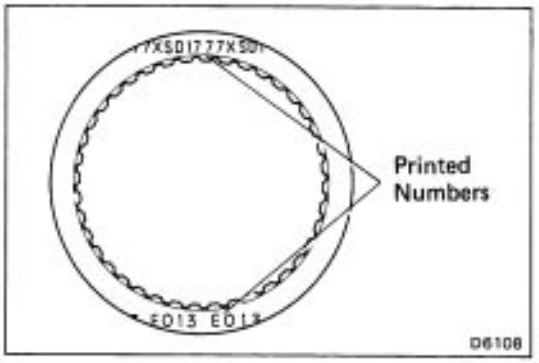

2. INSPECT DISC, PLATE AND FLANGE

Check that the sliding surface of disc, plate and flange worn or burnt. If necessary, replace them.

HINT:

- If the lining of the disc is exfoliated or discolored, or even a part of the printed numbers are defaced, replace all discs.
- Before assembling new discs, soak them in ATF for at least two hours.

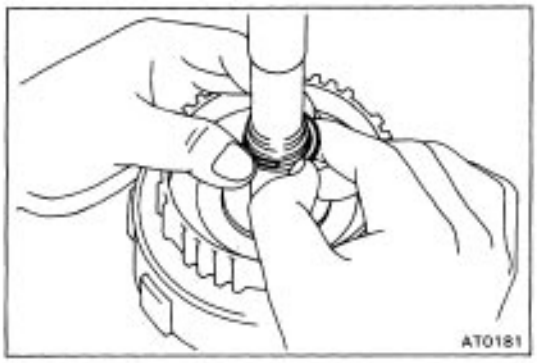

ASSEMBLY OF FORWARD CLUTCH

1. INSTALL OIL SEAL RINGS

Install the two oil seal rings to the shaft.

NOTICE: Do not spread the ring ends more than necessary.

HINT: After installing the oil seal rings, check that they move smoothly.

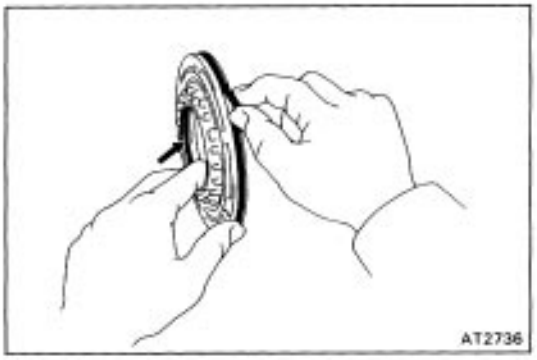

2. INSTALL CLUTCH PISTON TO CLUTCH DRUM

(a) Install the two new O–rings to the piston.

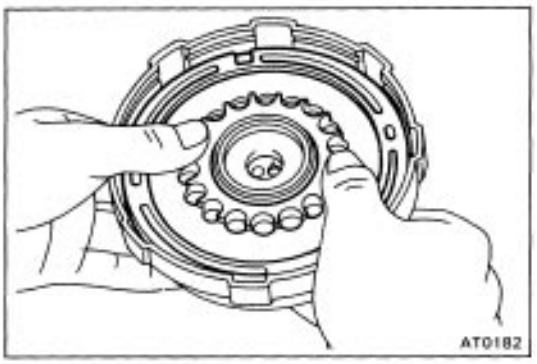

(b) Coat the O–rings with ATF.

(c) Press the piston into the drum with the cup side up, being careful not to damage the O– ring.

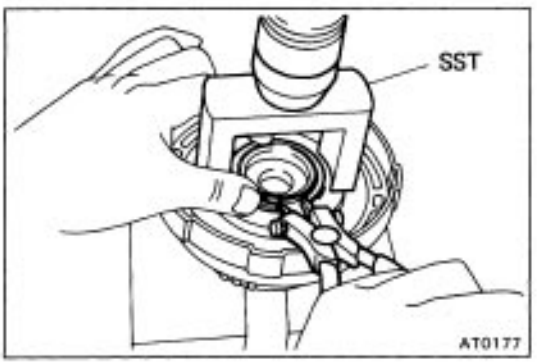

3. INSTALL PISTON RETURN SPRINGS

(a) Place the eighteen springs, spring retainer and snap ring onto the piston.

(b) Place SST on the spring retainer, and compress the springs with a shop press.

SST 09350–32014 (09351–32070)

(c) Install the snap ring with snap ring pliers.

Be sure the end gap of the snap ring is not aligned with the spring retainer claw.

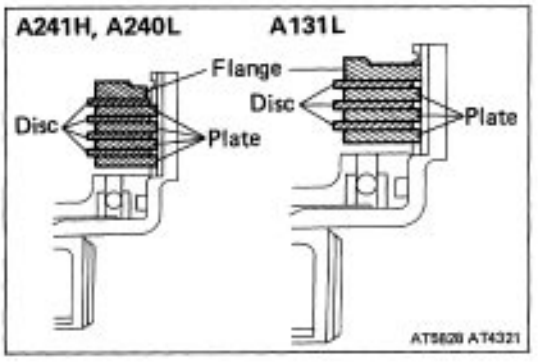

4. INSTALL PLATES, DISCS AND FLANGE

(a) Install the plates and discs.

Install in order: P = Plate D = Disc

A131L P –D –P –D –P–D

A141H, A240L P–D –P–D –P–D –P–D

(b) Install the flange with the flat end facing downward.

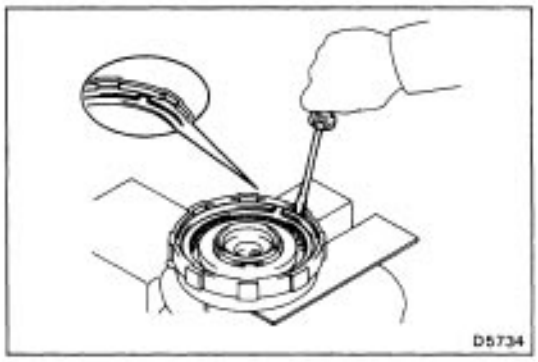

5. INSTALL SNAP RING

Check that the end gap of snap ring is not aligned with one of the cutouts.

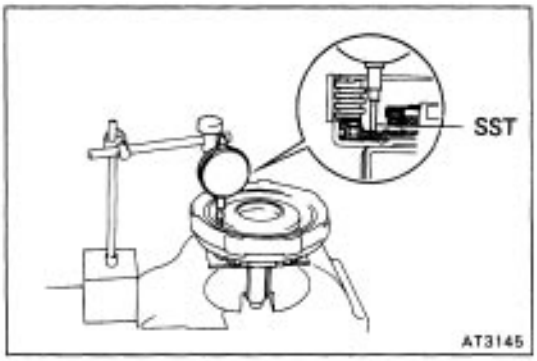

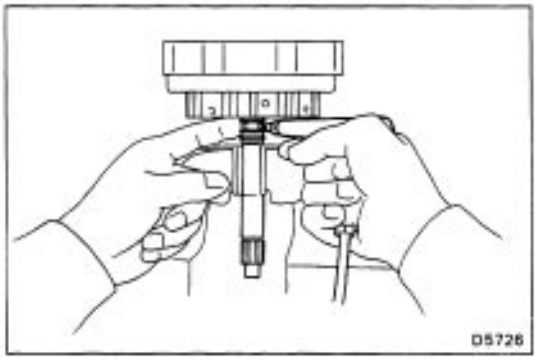

6. RECHECK PISTON STROKE OF FORWARD CLUTCH

Using a dial indicator (long type pick or SST), measure the forward clutch piston stroke applying and releasing the compressed air (4 – 8 kg/cm2, 57 – 114 psi, 392 – 785 kPa) as shown.

SST 09350–32014 (09351–32190)

Piston stroke:

A131L 1.11–1.47 mm (0.0437–0.0579 in.)

A241H, A240L 1.42–1.81 mm(0.0559–0.0713 in.)

If the piston stroke is nonstandard, select another flange.

HINT: There are two different thicknesses for the flange.

Flange thickness: 3.00 mm (0.1181 in.)

3.37 mm (0.1327 in.)

Front Planetary Gear

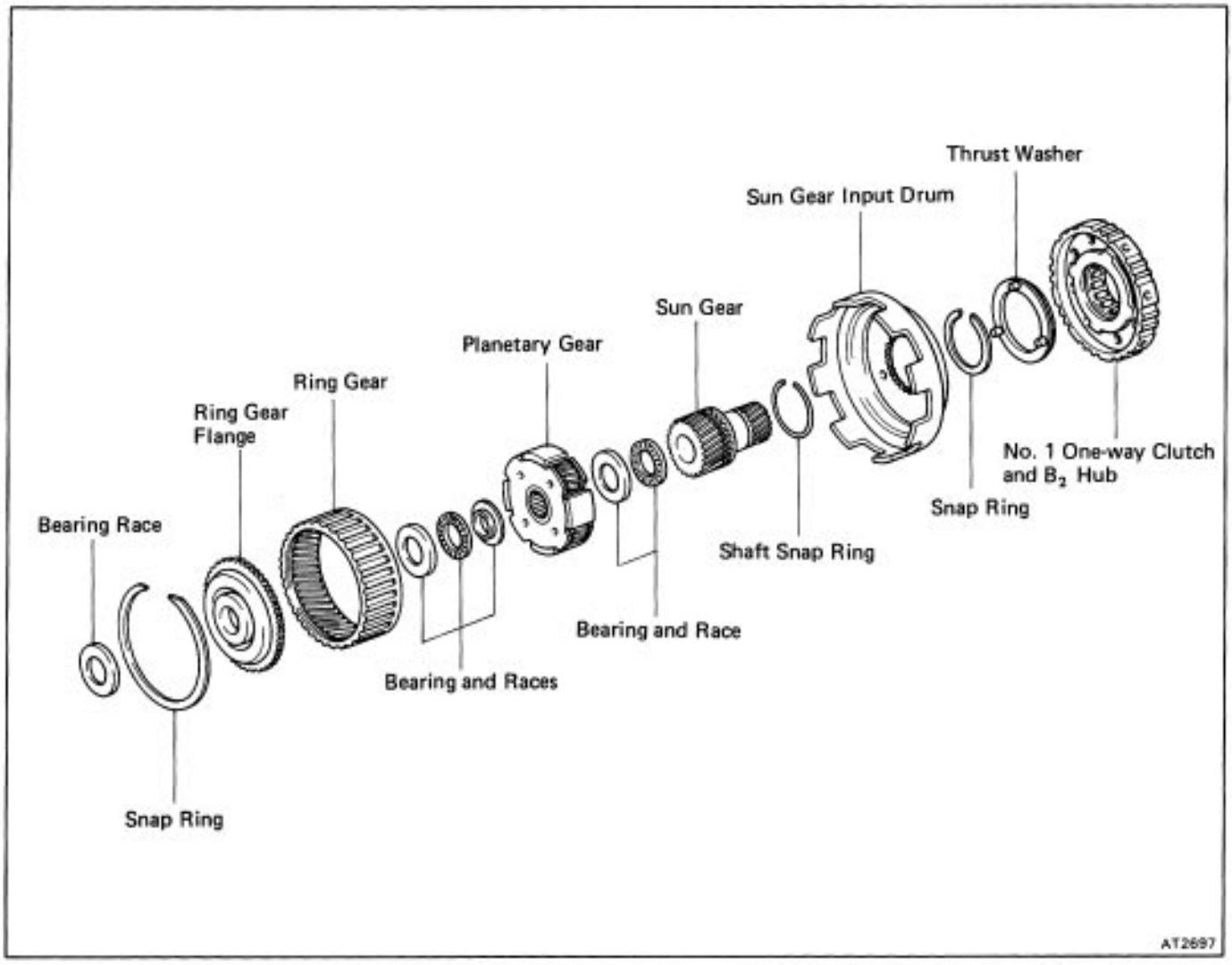

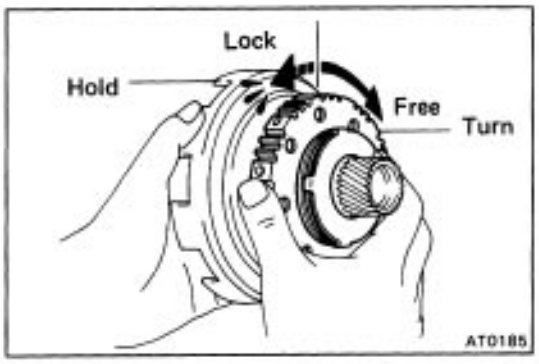

DISASSEMBLY OF ONE–WAY CLUTCH AND SUN GEAR

1. CHECK OPERATION OF ONE–WAY CLUTCH

Hold the sun gear and turn the hub. The hub should turn freely clockwise and should lock counterclockwise.

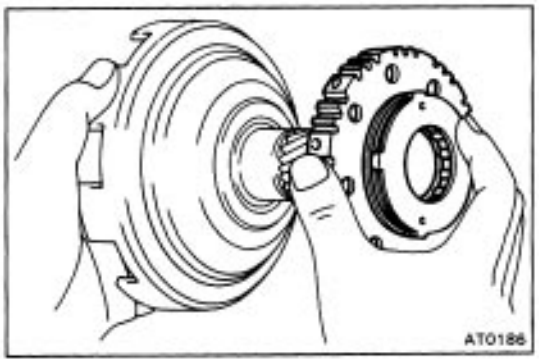

2. REMOVE SECOND BRAKE HUB AND ONE–WAY CLUTCH FROM SUN GEAR

While turning the hub clockwise, remove the one–way clutch from the sun gear.

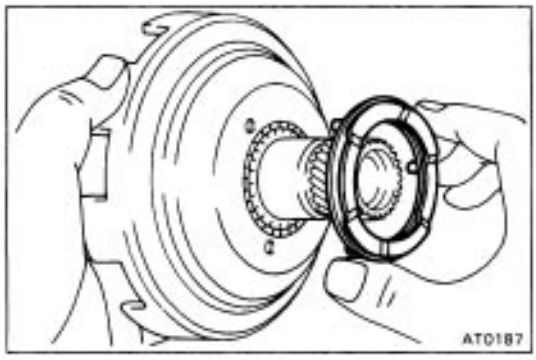

3. REMOVE THRUST WASHER FROM SUN GEAR INPUT DRUM

4. REMOVE SUN GEAR FROM DRUM

(a) Using the snap ring pliers, remove the snap ring from the drum.

(b) Remove the sun gear– from the drum.

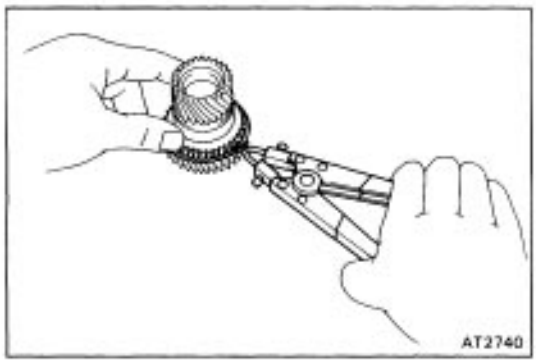

5. REMOVE SHAFT SNAP RING

Using the snap ring pliers, remove the shaft snap ring from the sun gear.

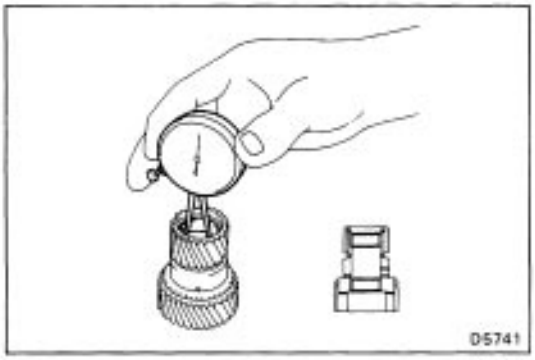

INSPECTION OF SUN GEAR

INSPECT SUN GEAR BUSHING

Using a dial indicator, measure the inside diameter of the sun gear.

Standard inside diameter: 22.025–22.046 mm (0.8671– 0.8680 in.)

Maximum diameter: 22.096 mm (0.8699 in.)

If the inside diameter is greater than the maximum, replace the sun gear.

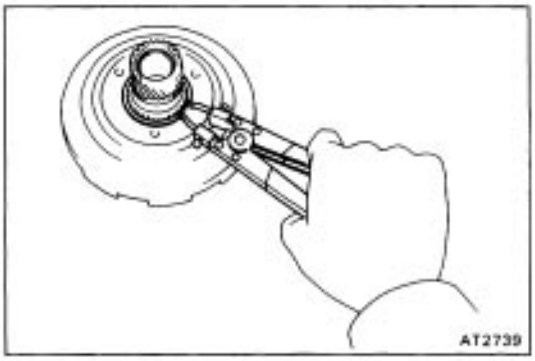

ASSEMBLY OF ONE–WAY CLUTCH AND SUN GEAR

1. INSTALL SHAFT SNAP RING TO SUN GEAR

2. INSTALL SUN GEAR TO DRUM

(a) Install the sun gear to the drum.

(b) Using the snap ring pliers, install the snap ring to the drum.

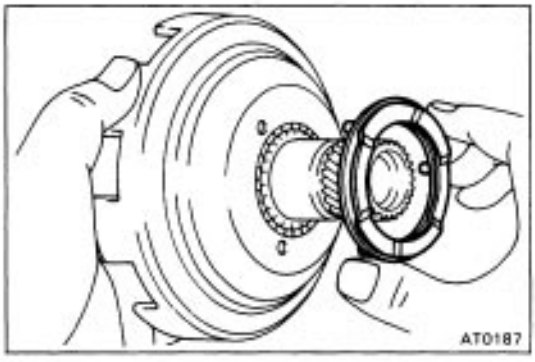

3. INSTALL THRUST WASHER TO SUN GEAR INPUT DRUM

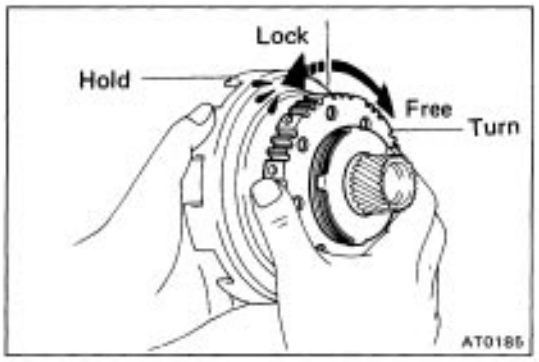

4. INSTALL ONE–WAY CLUTCH AND SECOND BRAKE HUB ON SUN GEAR

While turning the hub clockwise, slide the one–way clutch onto the sun gear.

5. RECHECK OPERATION OF ONE–WAY CLUTCH

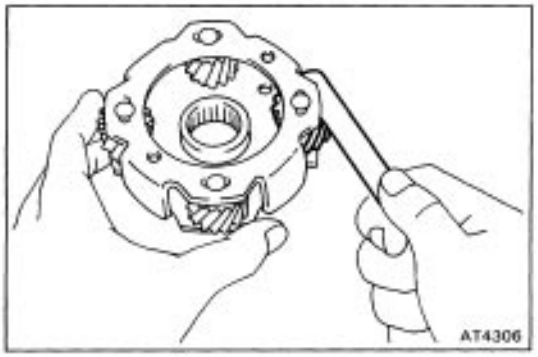

INSPECTION OF FRONT PLANETARY GEAR

MEASURE PLANETARY PINION GEAR THRUST CLEARANCE

Using a feeler gauge, measure the planetary pinion gear thrust clearance.

Standard clearance: 0.2–0.5 mm (0.008–0.020 in.)

Maximum clearance: 0.5 mm (0.020 in.)

If the clearance is greater than the maximum, replace the planetary gear assembly.

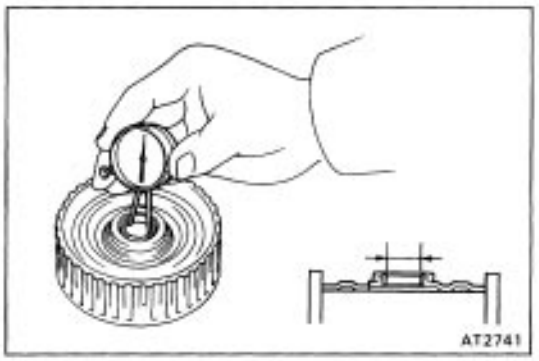

INSPECTION OF PLANETARY RING GEAR

1. INSPECT RING GEAR FLANGE BUSHING

Using a dial indicator, measure the inside diameter of the flange bushing. .

Standard inside diameter: 19–025–19.050 mm (0.7490–0.7500 in.)

Maximum inside diameter: 19.100 mm (0.7520 in.)

If the inside diameter is greater than the maximum, replace the flange.

2. REMOVE RING GEAR FLANGE

(a) Using a screwdriver, remove the snap ring.

(b) Remove the flange from the ring gear.

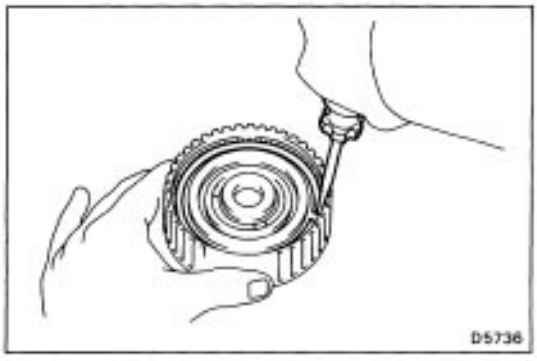

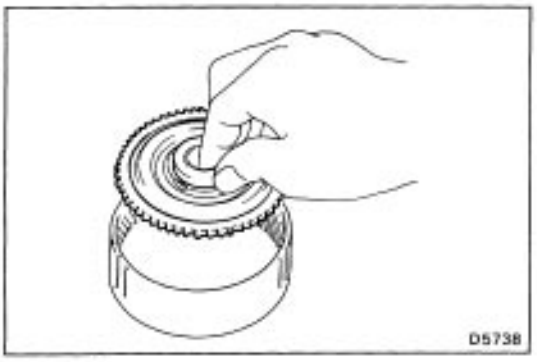

3. INSTALL RING GEAR FLANGE

(a) Position the flange onto the ring gear.

(b) Using a screwdriver, install the snap ring.

Second Brake

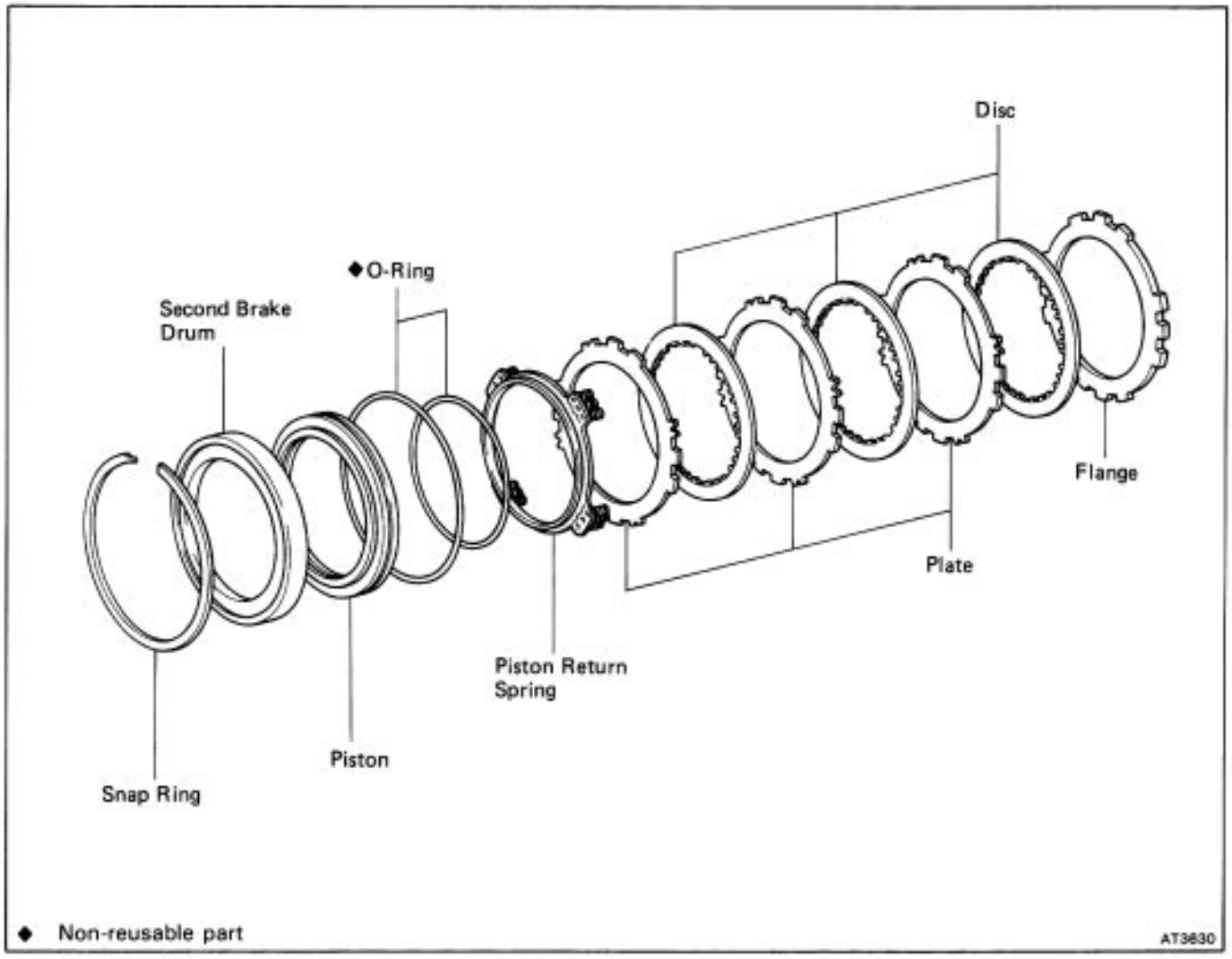

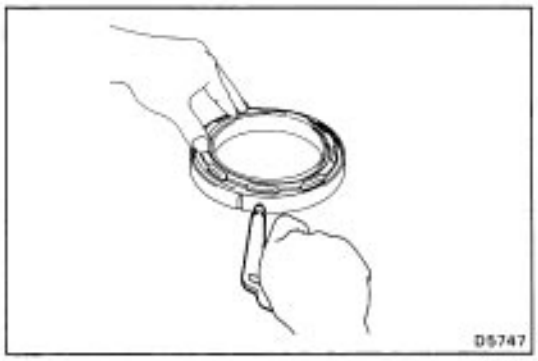

DISASSEMBLY OF SECOND BRAKE PISTON

REMOVE SECOND BRAKE PISTON

(a) Apply compressed air to the oil hole to remove the piston.

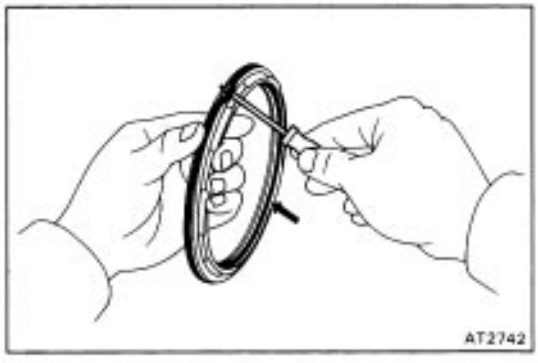

(b) Remove the two O–rings from the piston.

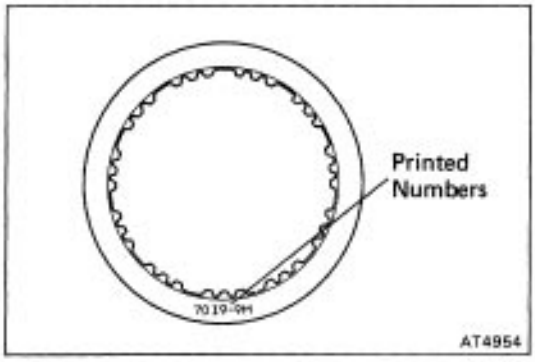

INSPECTION OF SECOND BRAKE COMPONENT

INSPECT DISCS, PLATES AND FLANGES

Check if the sliding surface of the discs, plates and flanges are worn or burnt. If necessary, replace them.

HINT:

- If the lining of the disc is exfoliated or discolored, or even a part of the printed number is defaced, replace all discs.
- Before assembling new discs, soak them in ATF for at least two hours.

ASSEMBLY OF SECOND BRAKE PISTON

INSTALL PISTON

(a) Coat a new O–ring with ATF.

(b) Install the two O–rings on the piston.



(c) Press the piston into the drum, being careful not to damage the O–rings.

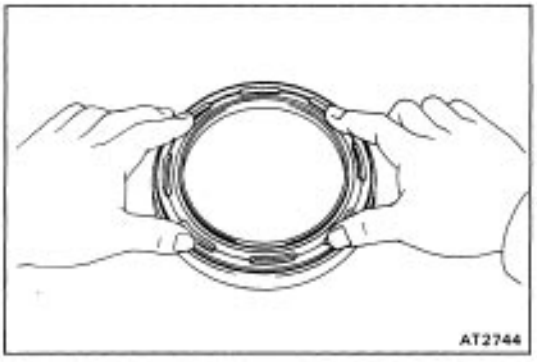

Rear Planetary Gear

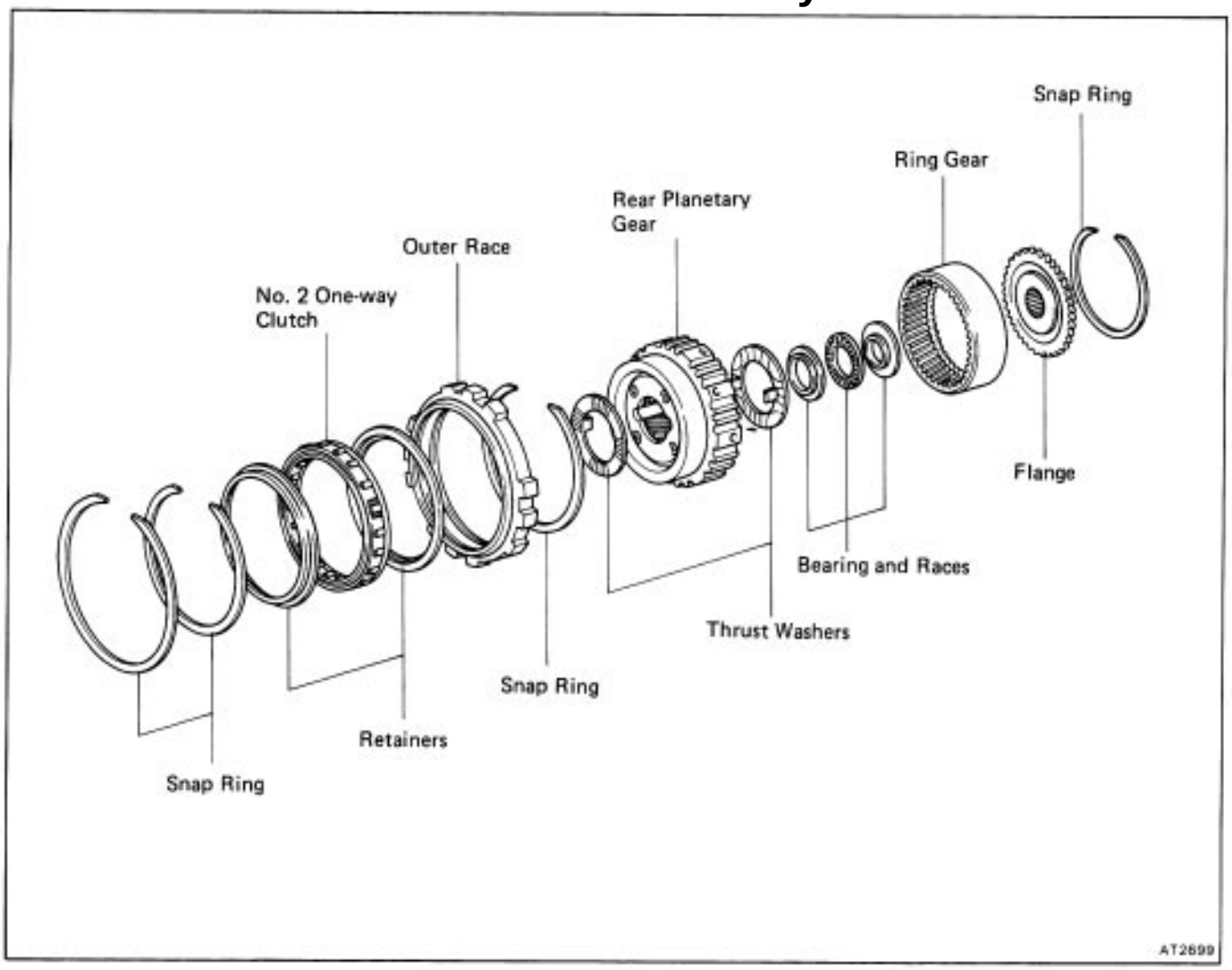

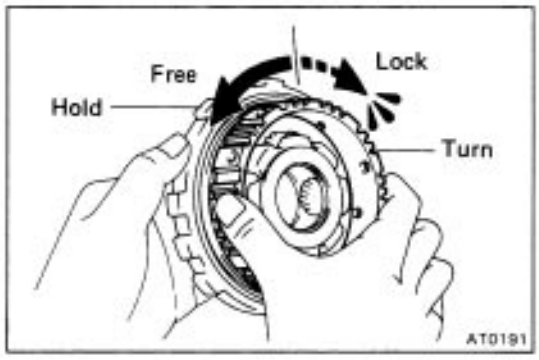

DISASSEMBLY OF ONE–WAY CLUTCH

1. CHECK OPERATION OF ONE–WAY CLUTCH

Hold the outer race and turn the hub. The hub should turn freely counterclockwise and should lock clockwise.

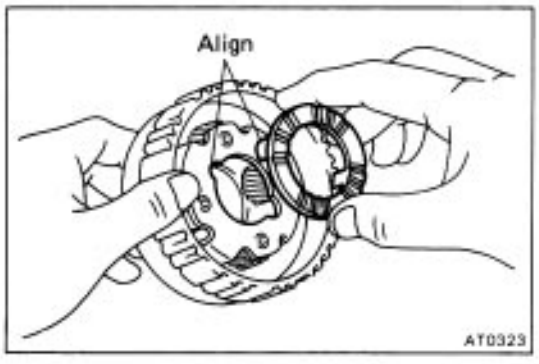

2. REMOVE THRUST WASHERS

Remove the two thrust washers from the both sides of planetary gear.

3. SEPARATE ONE–WAY CLUTCH AND PLANETARY GEAR

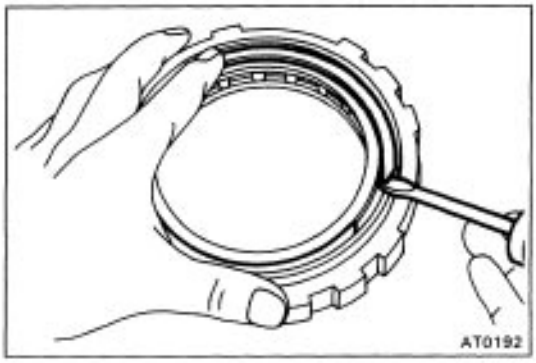

4. REMOVE ONE–WAY CLUTCH FROM OUTER RACE

(a) Remove the two snap rings and retainers from the both sides.

(b) Remove the one–way clutch from the outer race.

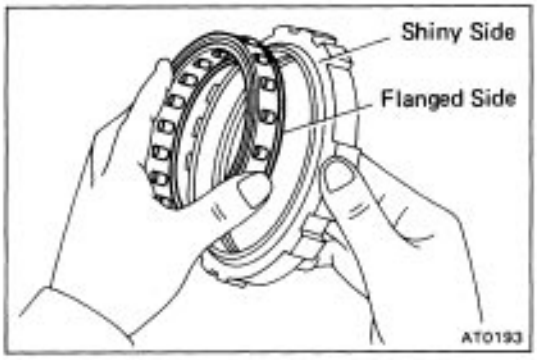

ASSEMBLY OF ONE–WAY CLUTCH

1. INSTALL ONE–WAY CLUTCH

(a) Install the one–way clutch into the outer race, facing the flanged side of the one–way clutch toward the shiny side of the outer race.

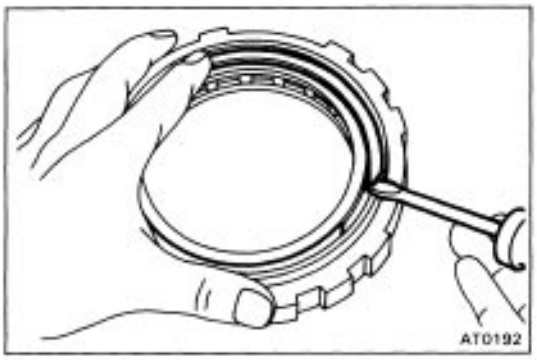

(b) Install the two retainers and snap rings to the both sides.

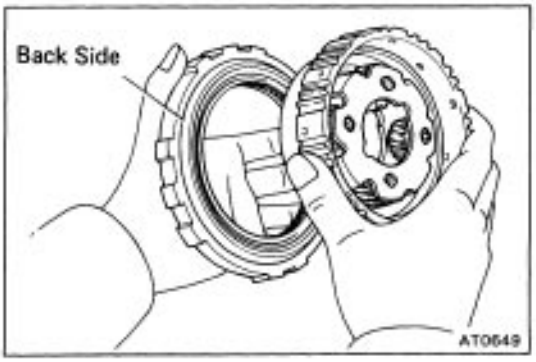

2. INSTALL PLANETARY GEAR INTO ONE–WAY CLUTCH

Install the planetary gear into the one–way clutch, facing the inner race of the planetary gear toward the black side of the one–way clutch outer race.

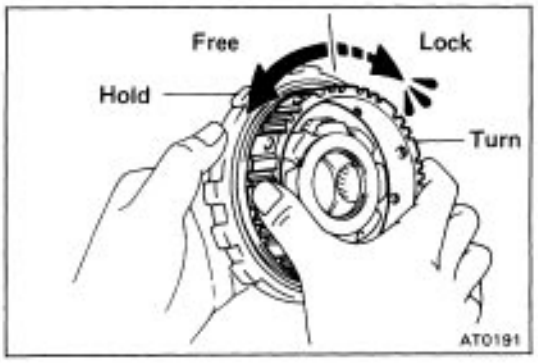

3. CHECK OPERATION OF ONE–WAY CLUTCH

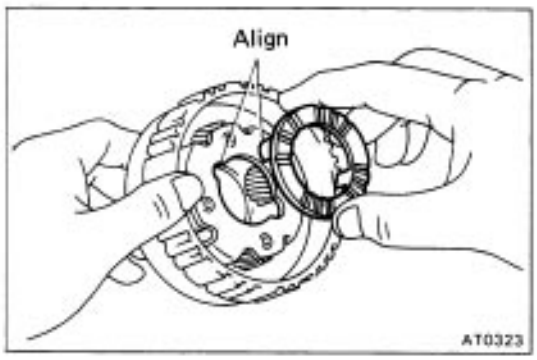

4. INSTALL THRUST WASHERS

(a) Coat the two thrust washers with petroleum jelly.

(b) Align the tab of the washers with the hollow of the carrier.

REPLACEMENT OF RING GEAR FLANGE

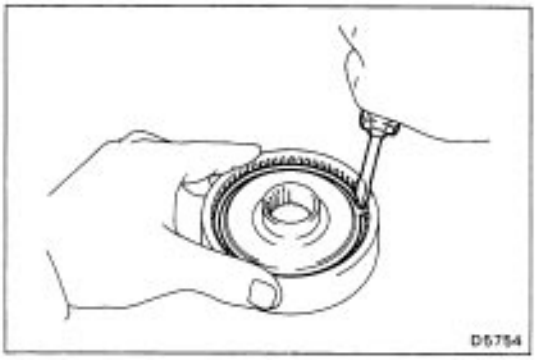

1. REMOVE RING GEAR FLANGE

(a) Using a screwdriver, remove the snap ring.

(b) Remove the flange from the ring gear.

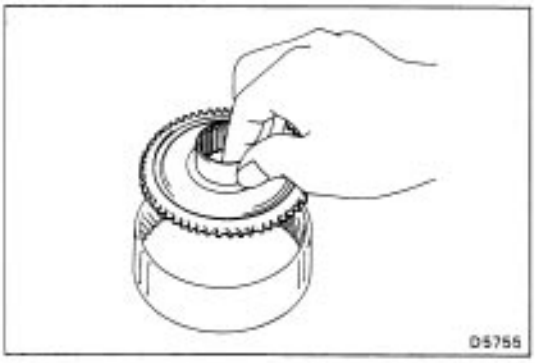

2. INSTALL RING GEAR FLANGE

(a) Position the flange into the ring gear.

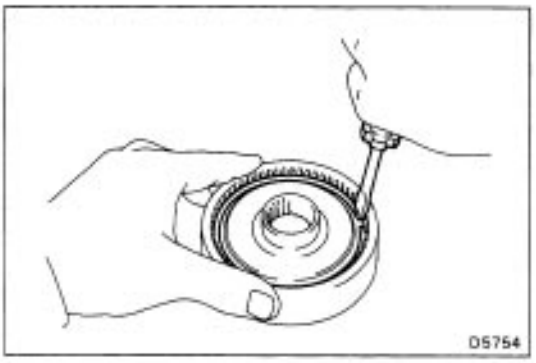

(b) Using a screwdriver, install the snap ring.

INSPECTION OF REAR PLANETARY GEAR

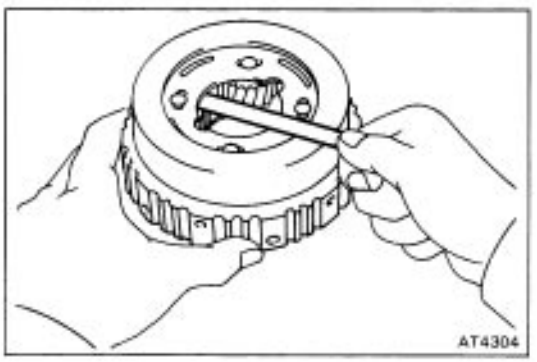

MEASURE PLANETARY PINION GEAR THRUST CLEARANCE

Using a feeler gauge, measure the planetary pinion gear thrust clearance.

Standard clearance: 0.2 – 0.5 mm (0.008 – 0.020 in.)

Maximum clearance: 0.5 mm (0.020 in.)

If the clearance is greater than the maximum, replace the planetary gear assembly.

First and Reverse Brake

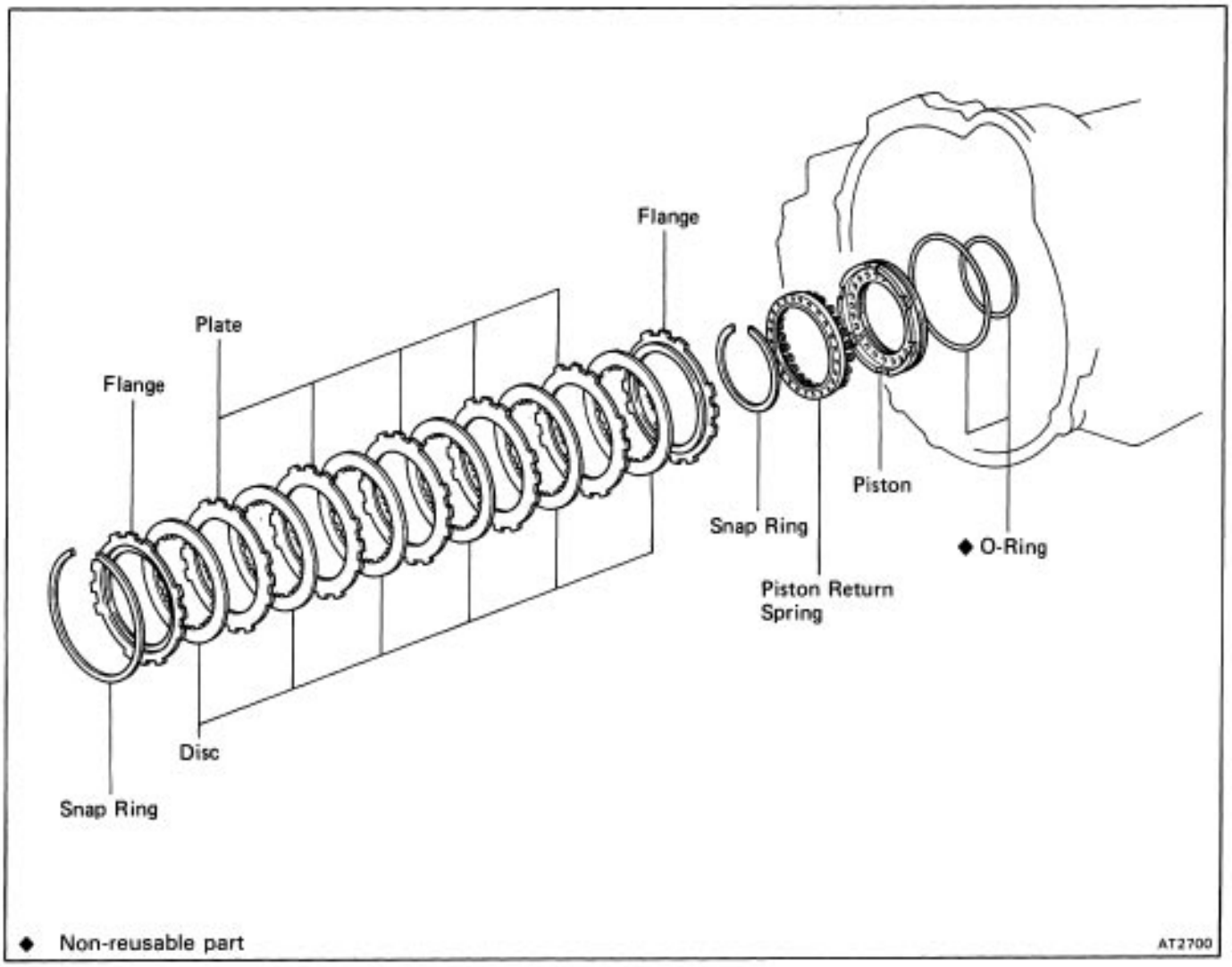

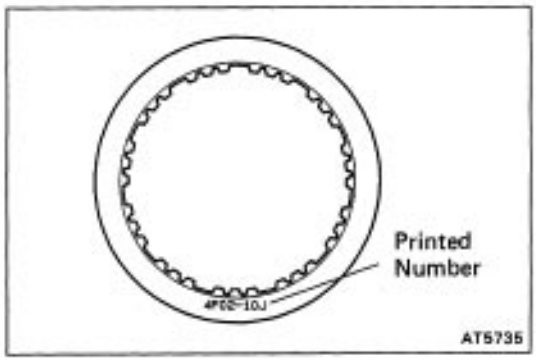

INSPECTION OF FIRST AND REVERSE BRAKE COMPONENT

INSPECT DISCS, PLATE AND FLANGE

Check if the sliding surface of the discs, plates and flanges are worn or burnt. If necessary, replace them.

HINT:

- If the lining of the disc is exfoliated or discolored, or even a part of the printed number is defaced, replace all discs.
- Before assembling new discs, soak them in ATF for at least two hours.

Intermediate Shaft

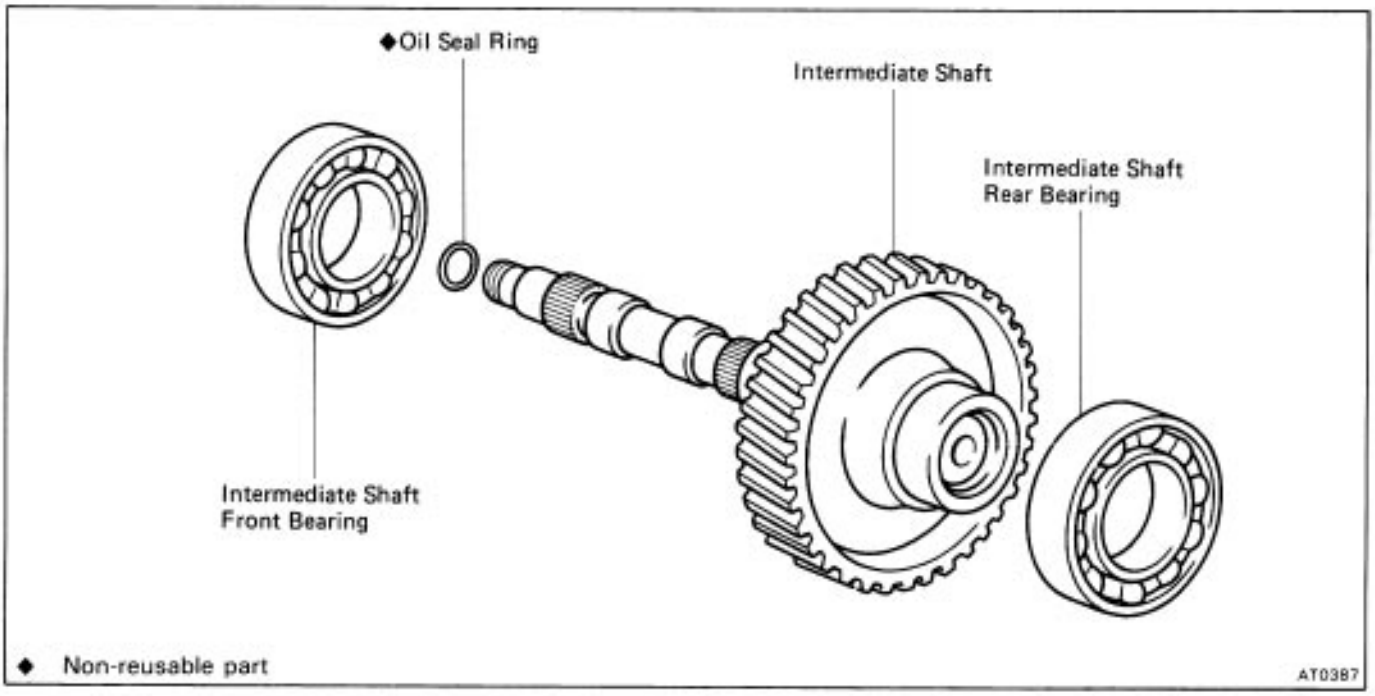

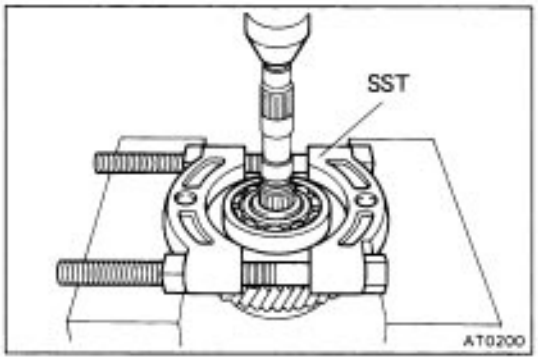

DISASSEMBLY OF INTERMEDIATE SHAFT

1. REMOVE INTERMEDIATE SHAFT FRONT BEARING

Using SST, press out the bearing.

SST

A131L : 09950–00020

A240L, A241H: 09555–55010

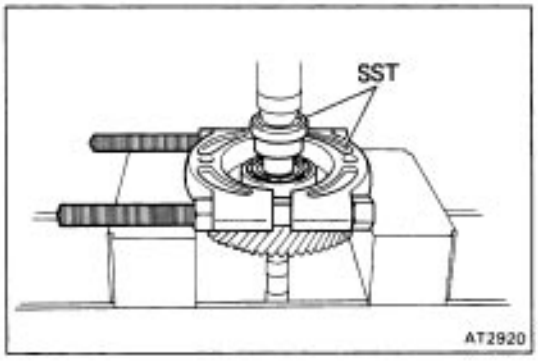

2. REMOVE INTERMEDIATE SHAFT REAR BEARING

Using SST, press out the bearing.

SST

A131L: 09350–32014 (09351–32090), 09950–00020

A240L, A241H: 09350–32014 (09351–32090), 09555–55010

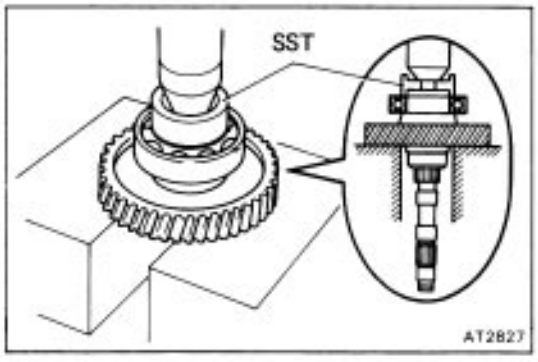

ASSEMBLY OF INTERMEDIATE SHAFT

1. INSTALL INTERMEDIATE SHAFT REAR BEARING

Using SST, press in a new bearing.

SST 09350–32014 (09351–32150)

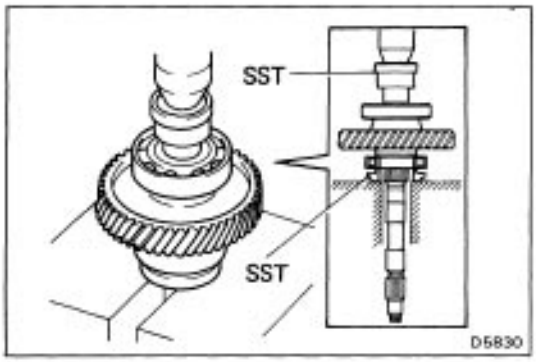

2. INSTALL INTERMEDIATE SHAFT FRONT BEARING

(a) Using SST, press in a new bearing.

SST 09350–32014 (09351–32090, 09351–32120)

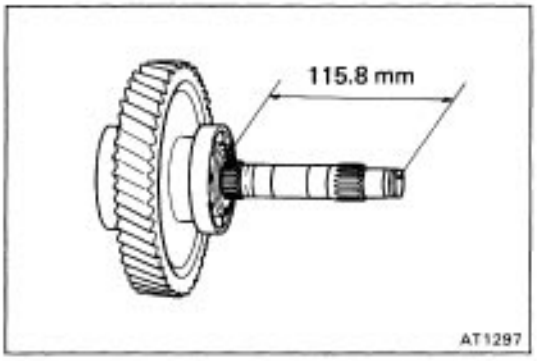

(b) Check that the distance from the gear flange end to the intermediate shaft end is 115.8 mm (4.559 in.).

Counter Shaft (A240L A241H)

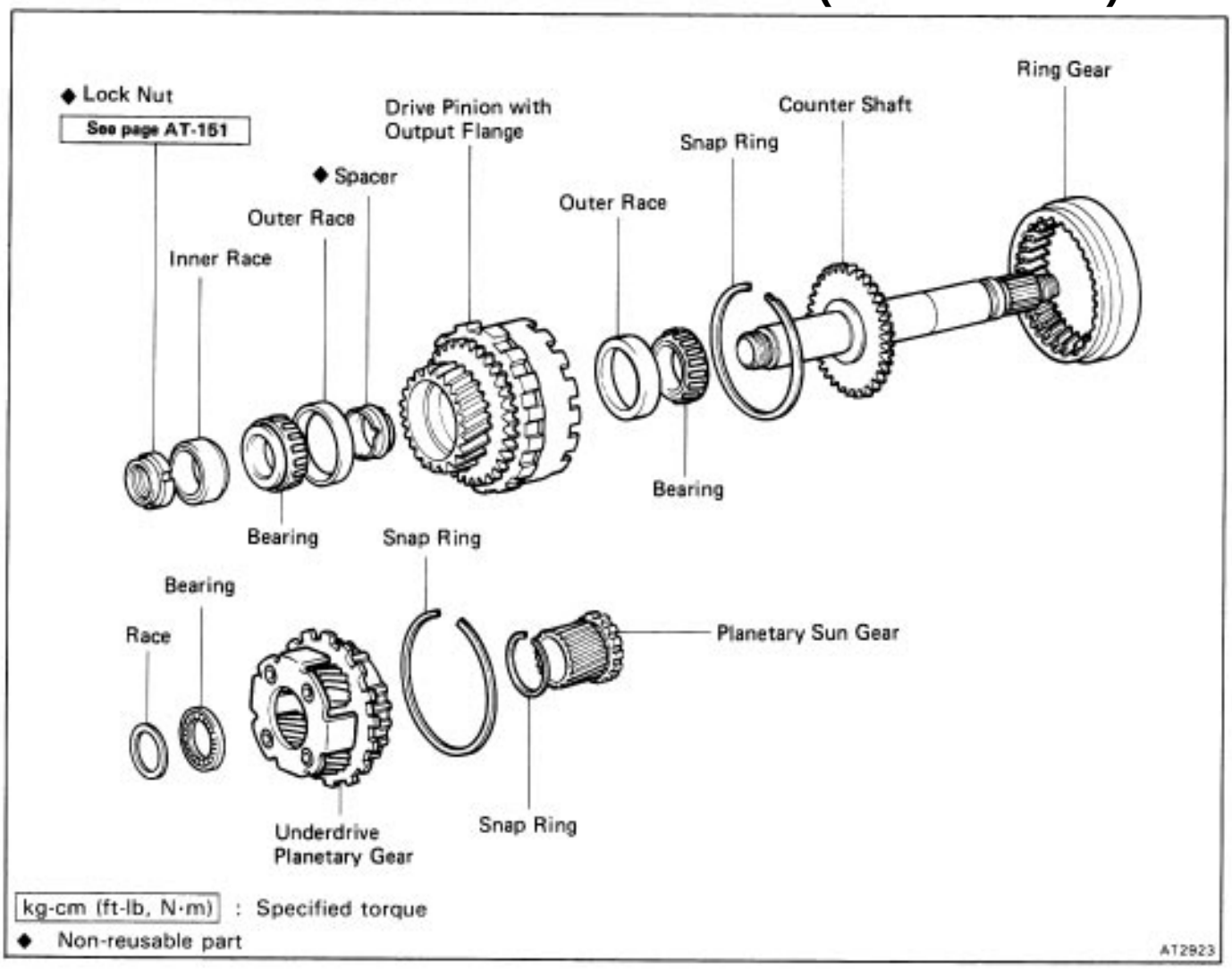

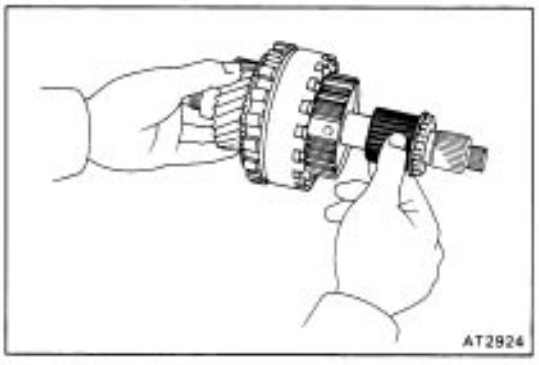

DISASSEMBLY OF COUNTER SHAFT

1. REMOVE UNDERDRIVE PLANETARY SUN GEAR FROM COUNTER SHAFT

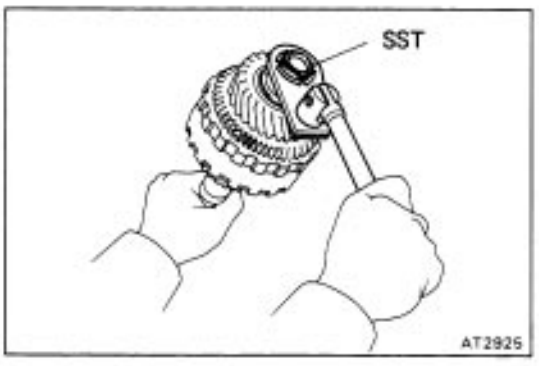

2. MEASURE STARTING TORQUE OF COUNTER SHAFT

(a) Using SST, temporarily tighten the lock nut.
SST 09350–32014 (09351–32170)

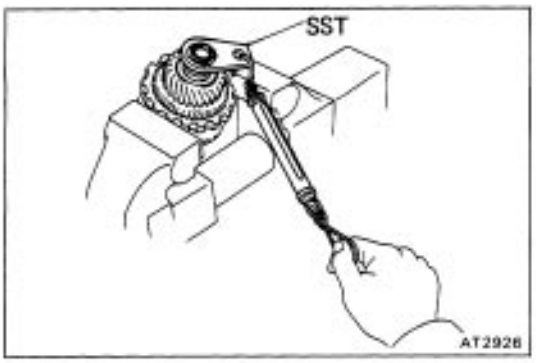

(b) Using soft jaws, hold the drive pinion in a vise.

(c) Using SST and spring tension gauge, measure the starting torque of the counter shaft.

SST 09350–32014 (09351–32170)

Starting torque:

with spring tension gauge

1.2 – 2.0 kg (2.6 – 4.4 lb)

with torque gauge (hexagon nut side)

6 – 10 kg–cm

(5.2 – 8.7 in.–lb, 0.6 – 1.0 N–m)

If the torque is exceeded, replace the spacer.

(d) Using SST, remove the lock nut.

SST 09350–32014 (09351–32170)

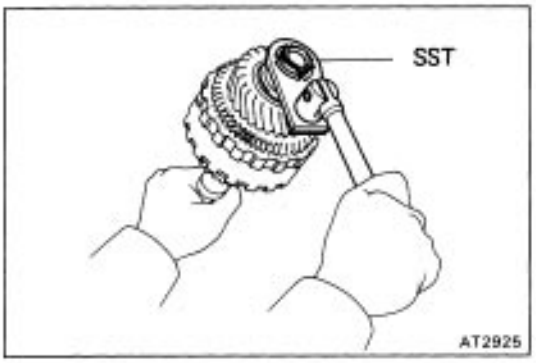

3. REMOVE SNAP RING FROM SUN GEAR

Using snap ring pliers, remove the snap ring from the sun gear.

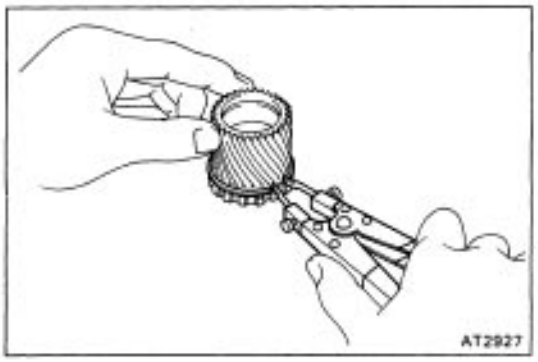

4. REMOVE SNAP RING FROM COUNTER SHAFT ASSEMBLY

Using a screwdriver, remove the snap ring from the counter shaft assembly.

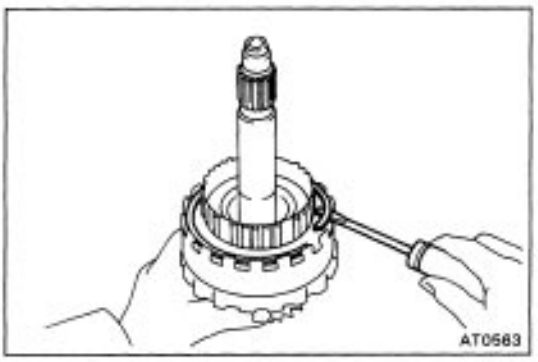

5. REMOVE UNDERDRIVE PLANETARY GEAR

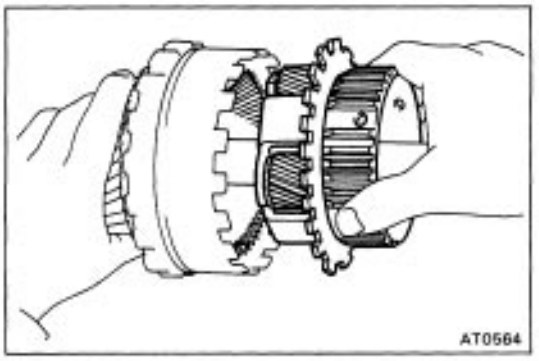

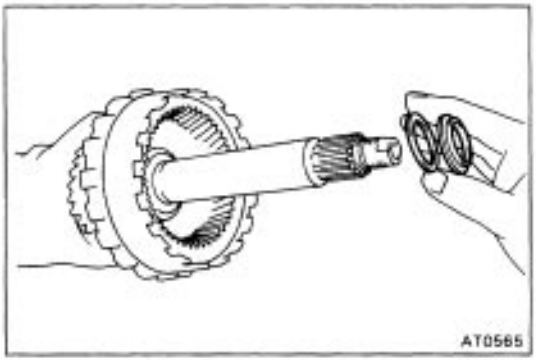

6. REMOVE THRUST NEEDLE ROLLER BEARING AND RACE

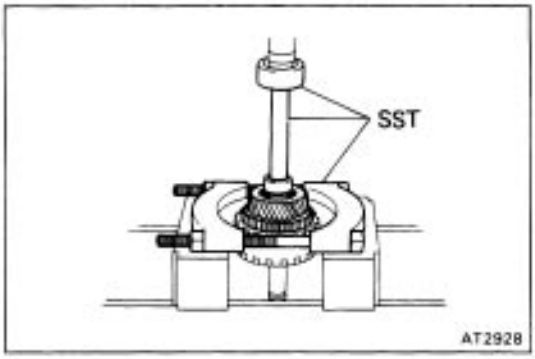

7. REMOVE DRIVE PINION WITH OUTPUT FLANGE, BEARING, INNER RACE AND SPACER

(a) Using SST and press, remove the drive pinion with output flange, bearing and inner race.
SST 09350–32014 (09351–32150, 09351–32130), 09555–55010

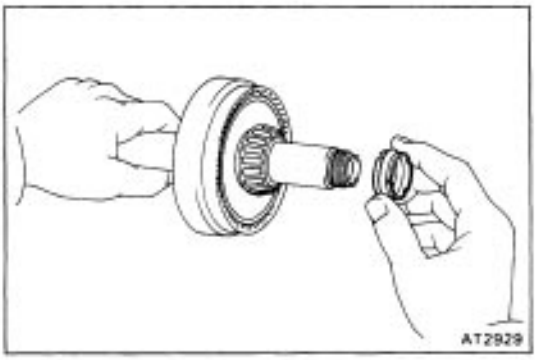

(b) Remove the spacer from the counter shaft.

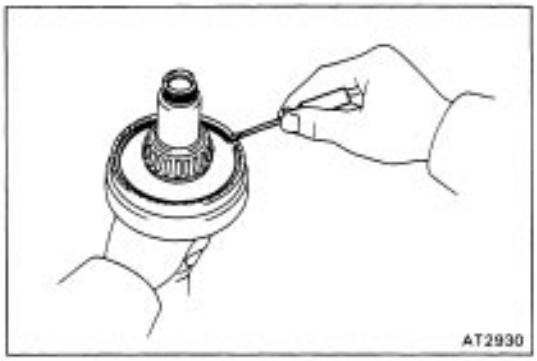

8. REMOVE RING GEAR

(a) Using a screwdriver, remove the snap ring from the counter shaft.

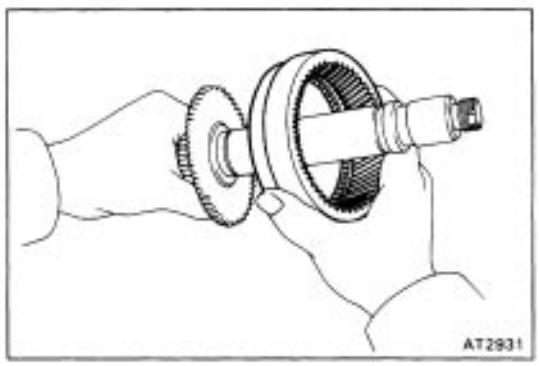

(b) Remove the ring gear from the counter shaft.

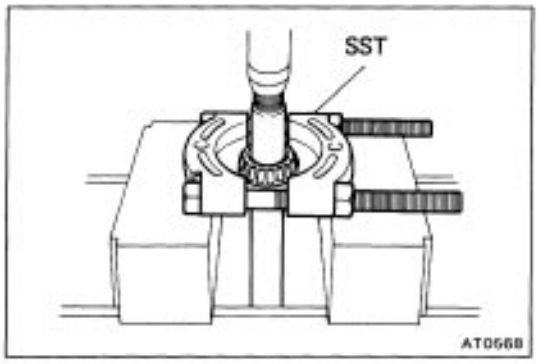

9. REMOVE BEARING

Using SST and press, remove the bearing.
SST 09950–00020

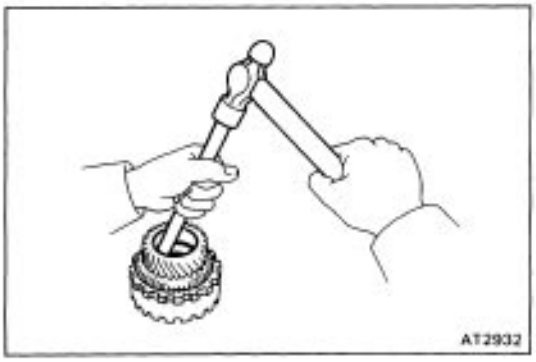

10. REMOVE BEARING OUTER RACES

Using a brass bar and hammer, tap out both bearing outer races.

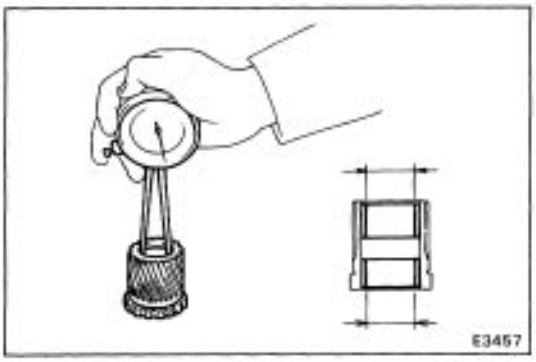

INSPECTION OF COUNTER SHAFT COMPONENTS

1. MEASURE PLANETARY SUN GEAR BUSHING INSIDE DIAMETER

Using a caliper gauge, measure the bushing inside diameter of the planetary sun gear as shown.

Standard inside diameter: 29.800 – 29.825 mm (1.17322 – 1.17421 in.)

Maximum inside diameter: 29.870 mm (1.17598 in.)

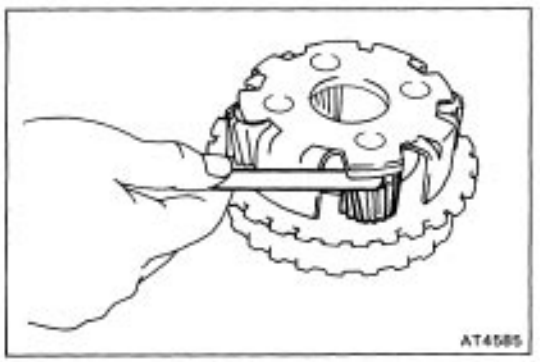

2. MEASURE PLANETARY PINION GEAR THRUST CLEARANCE

Using a feeler gauge, measure the planetary pinion gear thrust clearance.

Standard clearance: 0.2 – 0.5 mm (0.008 – 0.020 in.)

Maximum clearance: 0.5 mm (0.020 in.)

If the clearance is greater than the maximum, replace the planetary gear assembly.

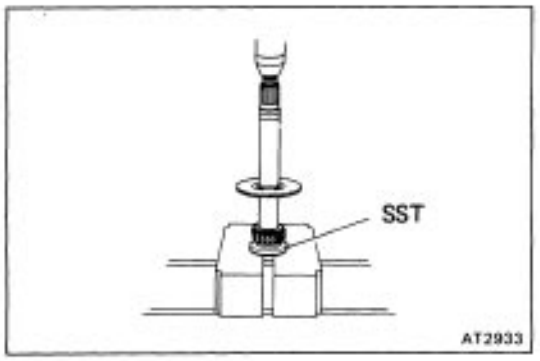

ASSEMBLY OF COUNTER SHAFT

1. INSTALL BEARING TO COUNTER SHAFT

Using SST and press, press in the bearing of the thick inner race side.
SST 09350–32014 (09351–32180)

2. INSTALL RING GEAR

(a) Install the ring gear to the counter shaft.

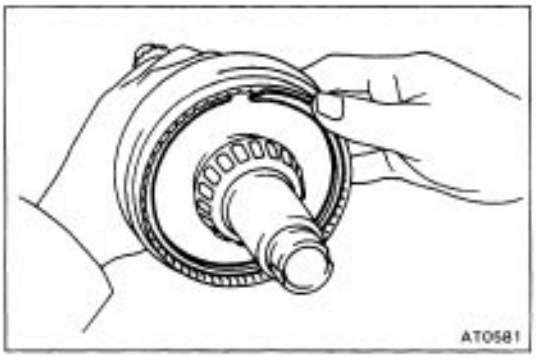

(b) Install the snap ring.

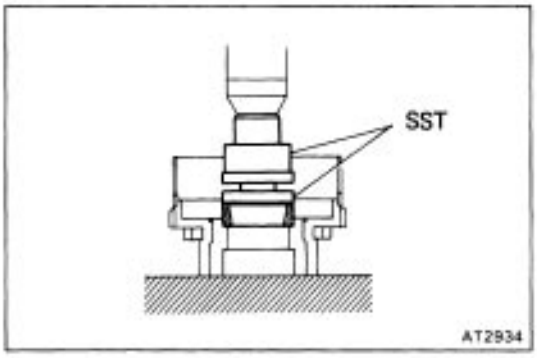

3. INSTALL BEARING OUTER RACES TO DRIVE PINION

(a) Using SST and press, press in the thick race to the flange side of the drive pinion.
SST 09350–32014 (09351–32090, 09351–32180)

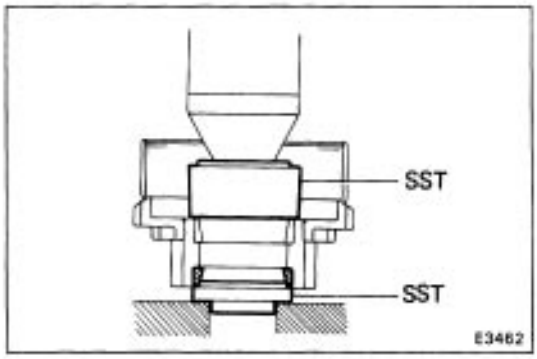

(b) Using SST and press, press in the thin race to the other side.
SST 09350–32014 (09351–32150, 09351–32180)

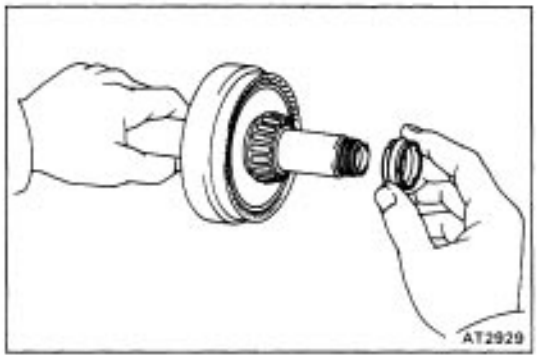

4. INSTALL DRIVE PINION TO COUNTER SHAFT

(a) Install the new spacer to the counter shaft.

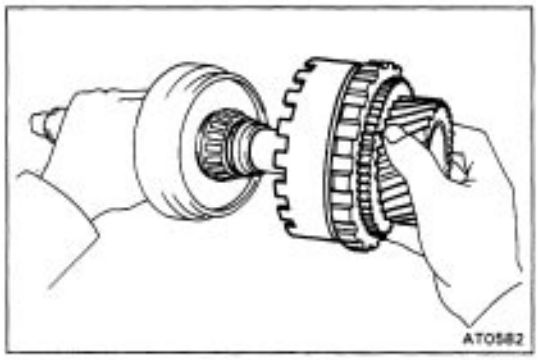

(b) Install the drive pinion to the counter shaft.

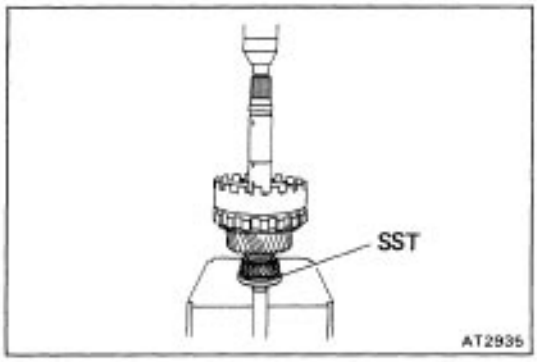

5. INSTALL ANOTHER BEARING TO COUNTER SHAFT

Using SST and press, press in the another bearing.
SST 09350–32014 (09351–32180)

NOTICE: Be sure there is some clearance between the output flange and bearing.

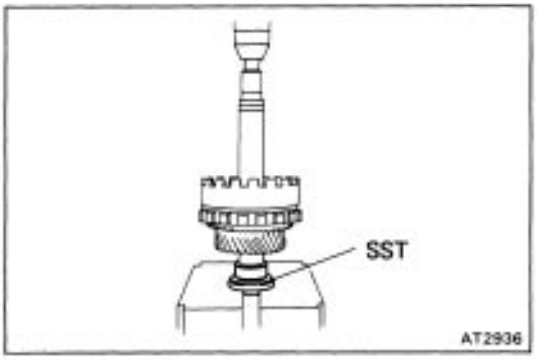

6. INSTALL BEARING INNER RACE

Using SST and press, press in the inner race.
SST 09350–32014 (09351–32180)

NOTICE: Be sure there is some clearance.

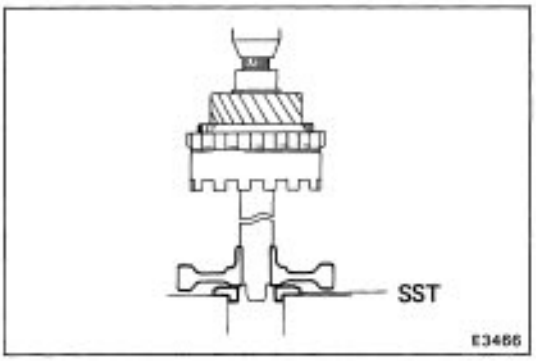

7. ADJUST COUNTER SHAFT STARTING TORQUE

(a) Using SST and press, press in the counter driven gear to the counter shaft.
SST 09350–32014 (09351–32100)

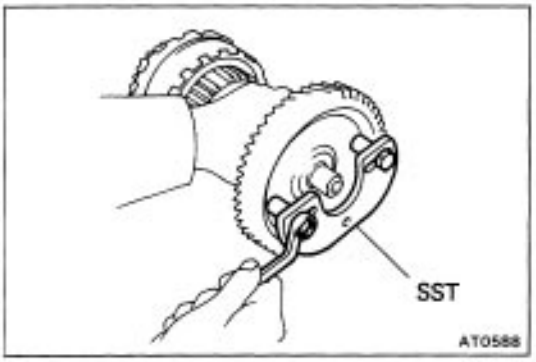

(b) Install SST to the driven gear.
SST 09350–32014 (09351–32032)

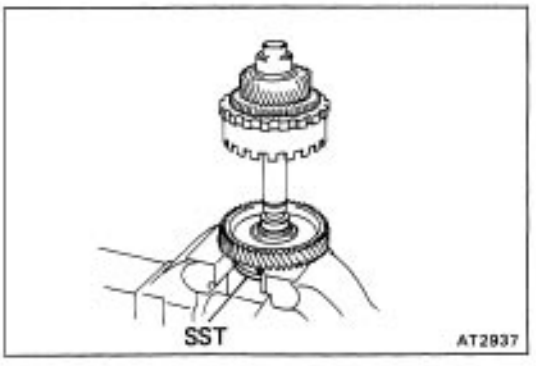

(c) Secure the counter shaft by holding the SST in a vise.
SST 09350–32014 (09351–32032)

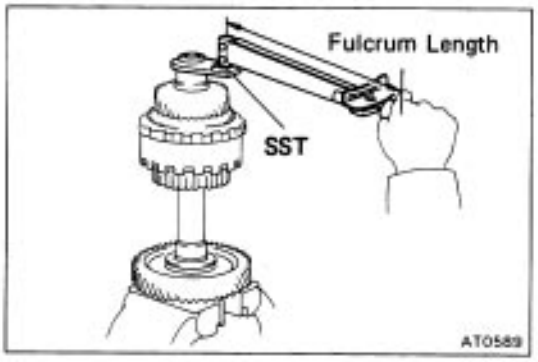

(d) Temporarily install the new lock nut, and using SST, tighten the lock nut until the counter shaft starting torque is in specification.
SST 09350–32014 (09351–32170)
Torque (Reference): 1,610 – 1,970 kg–cm (116 – 142 ft–lb, 157 – 193 N –m)
HINT: Use a torque wrench with a fulcrum length of 42cm (16.54 in.).

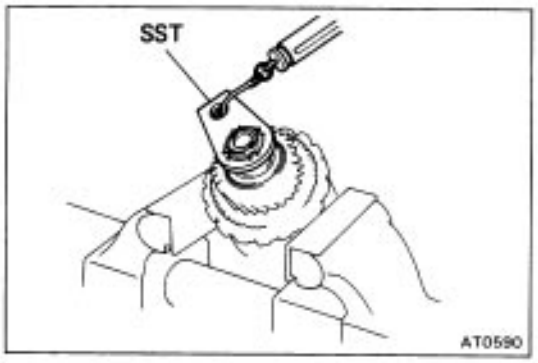

(e) Using soft jaws, hold the drive pinion in a vise.
(f) Using SST and spring tension gauge, measure the starting torque of the counter shaft.
SST 09350–32013 (09351–32170)
Starting torque:
with tension gauge
1.2 – 2.0 kg (2.6 – 4.4 lb)
with torque gauge (hexagon nut side)
6 – 10 kg–cm
(5.2 – 8.7 in–lb, 0.6 – 1.0 N–m)
If the starting torque is exceeded, replace the spacer and retorque.
HINT: Before measuring the starting torque, snug down the bearing by turning the counter shaft.
(g) Using a punch and hammer, stake the lock nut.

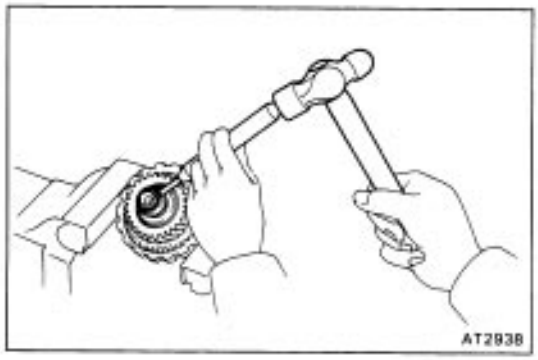

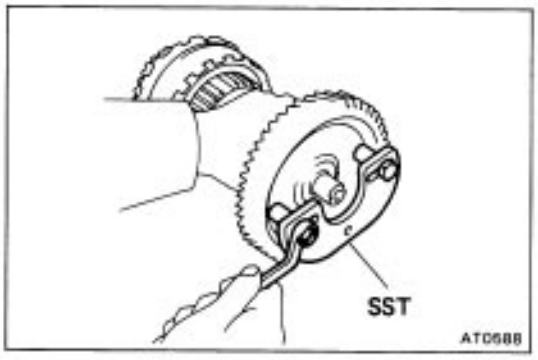

(h) Remove the SST from the counter driven gear.
SST 09350–32014 (09351–32032)

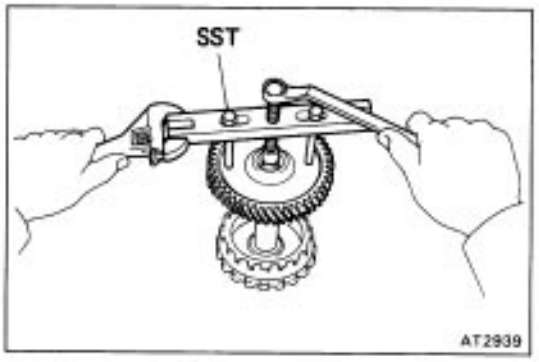

(i) Using SST, remove the counter driven gear.
SST 09350–32014 (09351–32061)

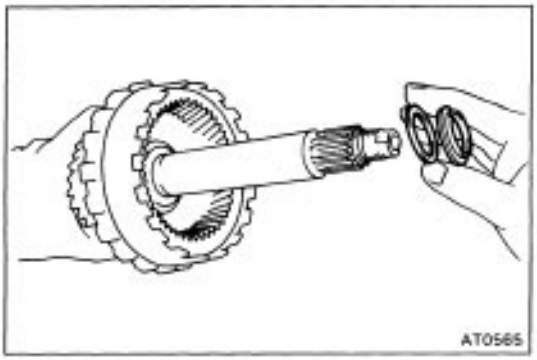

8. INSTALL RACE AND BEARING

Coat the race and bearing with petroleum jelly and install them to the counter shaft.

Bearing and race

mm (in.)

	Outer Diameter	Inner Diameter
Race	41.8 (1.646)	30.0 (1.181)
Bearing	43.7 (1.720)	31.0 (1.220)

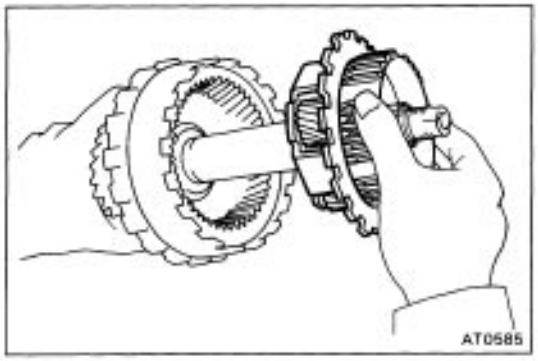

9. INSTALL UNDERDRIVE PLANETARY GEAR

(a) Install the underdrive planetary gear to the counter shaft.

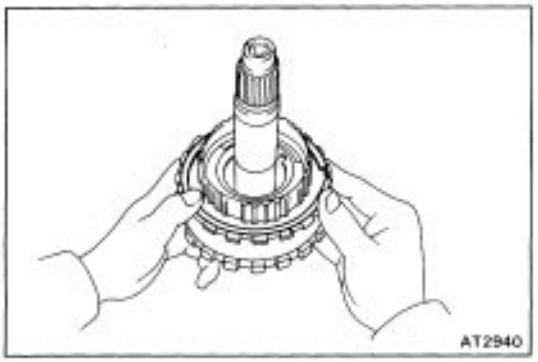

(b) Install the snap ring.

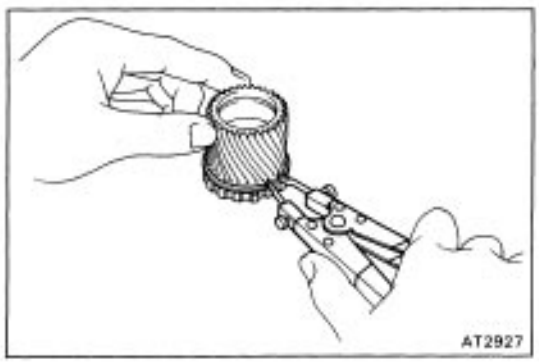

10. INSTALL UNDERDRIVE PLANETARY SUN GEAR

(a) Using snap ring pliers, install the snap ring to the sun gear.

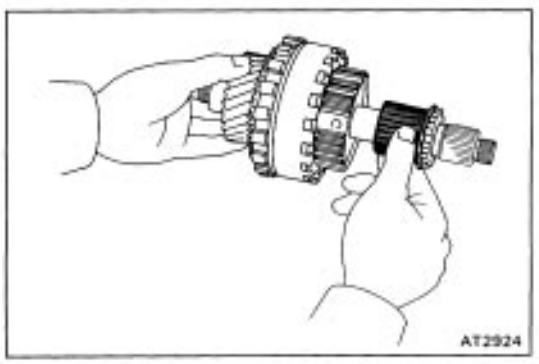

(b) Install the underdrive planetary sun gear to the counter shaft as shown.

Underdrive Clutch and One–Way Clutch No.3 (A240L A241H)

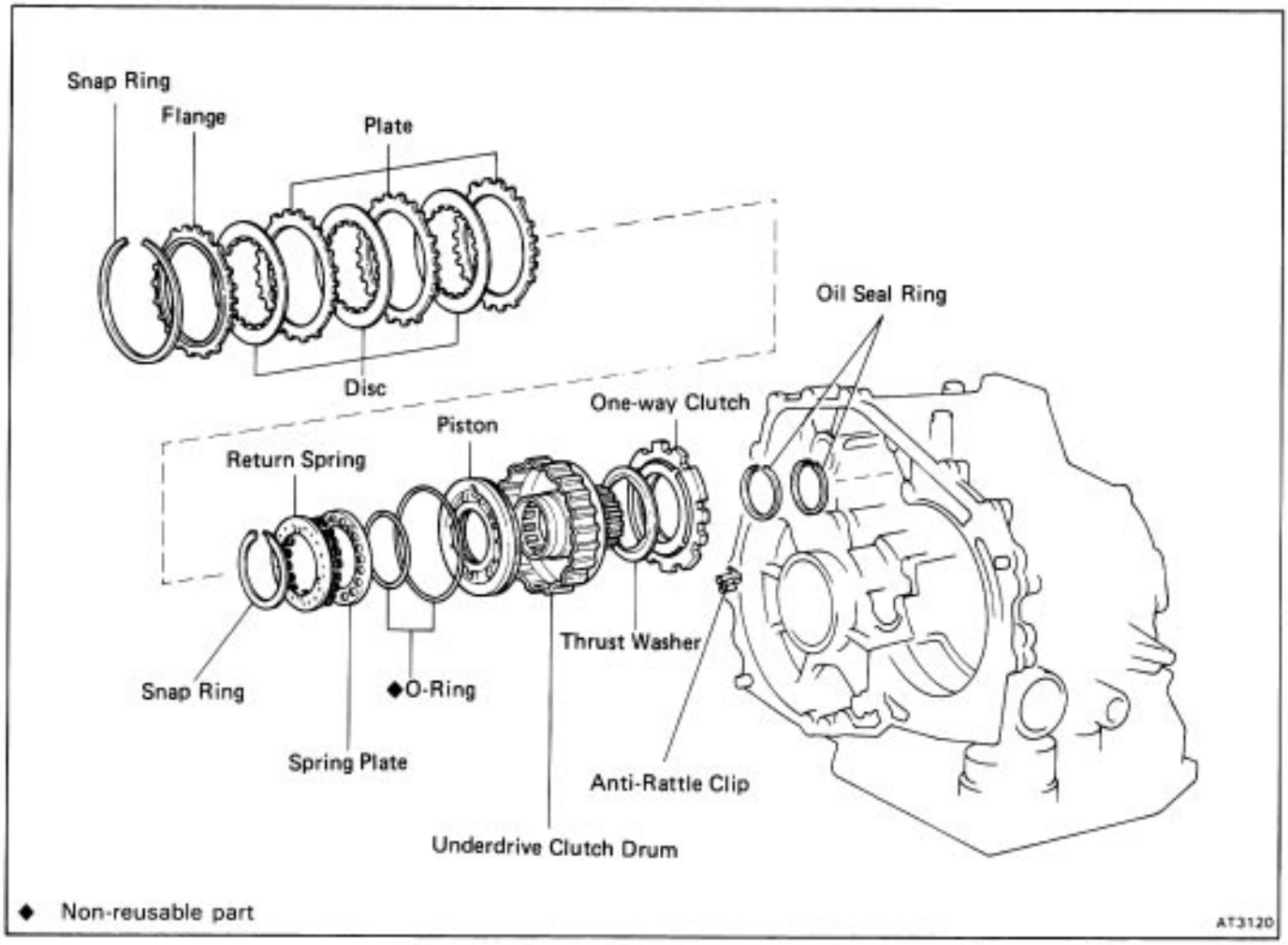

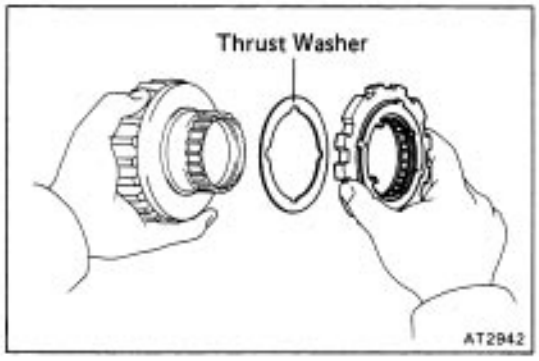

DISASSEMBLY OF UNDERDRIVE CLUTCH

1. REMOVE ONE–WAY CLUTCH FROM CLUTCH DRUM

Remove the one–way clutch and thrust washer from the underdrive clutch drum.

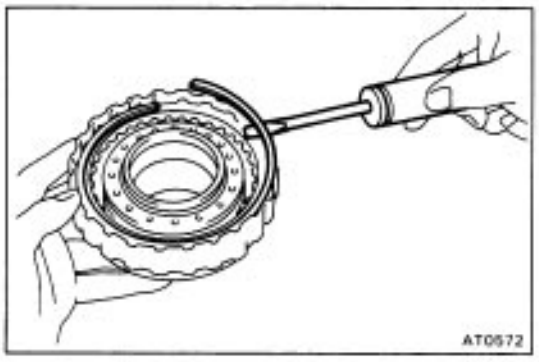

2. REMOVE SNAP RING

Using a screwdriver, remove the snap ring.

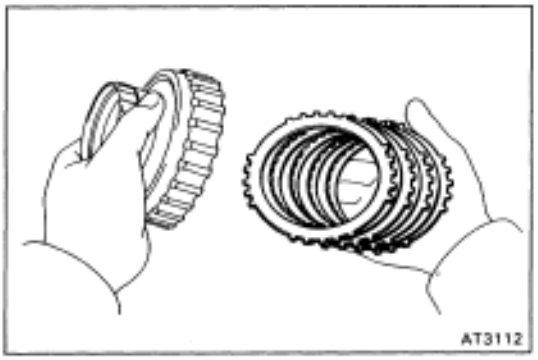

3. REMOVE FLANGE, DISCS AND PLATES

Remove the flange, discs and plates from the clutch drum.

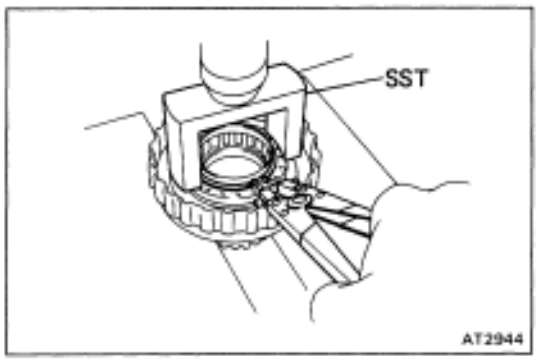

4. REMOVE RETURN SPRING AND SPRING PLATE

(a) Using SST and press, compress the return spring retainer.
SST 09350–32014 (09351–32070)
(b) Using snap ring pliers, remove the snap ring.
(c) Remove SST.

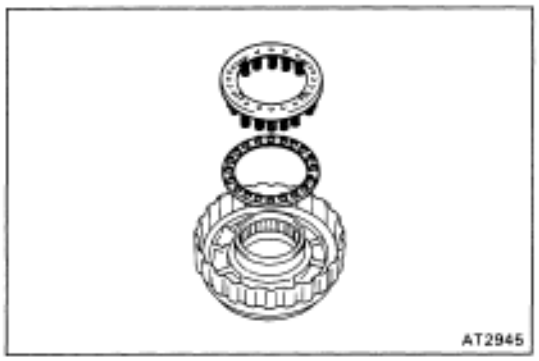

(d) Remove the return spring and spring plate.

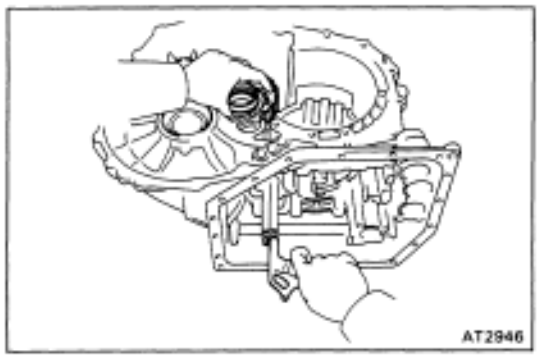

5. REMOVE UNDERDRIVE CLUTCH PISTON

(a) Install the underdrive clutch to the transaxle case.
HINT: Before installing the clutch, install the oil seal rings to the transaxle case.
(b) Apply compressed air into the oil passage of the case, and remove the piston from the clutch drum.
(c) If the piston does not pop out with compressed air, use needle–nose pliers to remove it.

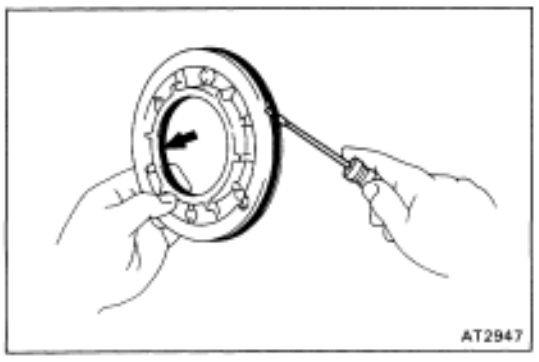

6. REMOVE O–RINGS FROM PISTON

Using a screwdriver, remove the two O–rings from the underdrive clutch piston.

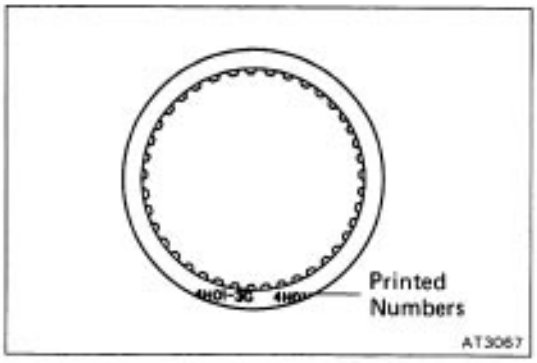

INSPECTION OF UNDERDRIVE CLUTCH COMPONENTS

1. INSPECT DISCS, PLATES AND FLANGES

Check if the sliding surface of the discs, plates and flanges are worn or burnt. If necessary, replace them.

HINT:

- If the lining of the disc is exfoliated or discolored, or ever a part of the printed numbers are defaced, replace the disc.
- Before assembling new discs, soak them in ATF for a1 least two hours.

2. INSPECT UNDERDRIVE CLUTCH PISTON

(a) Check that the check ball is free by shaking the piston,

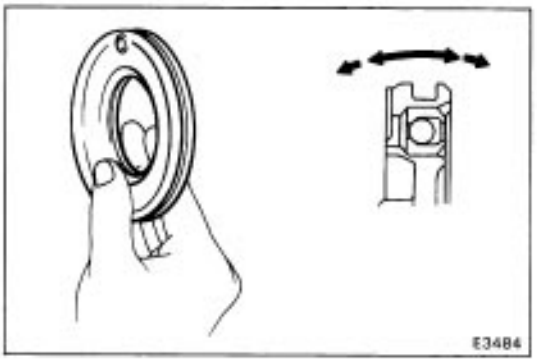

(b) Check that the valve does not leak by applying low pressure compressed air.

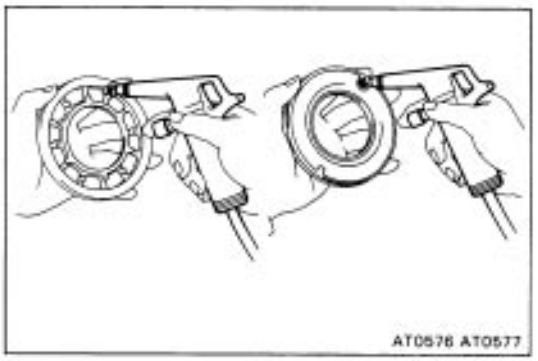

3. INSPECT UNDERDRIVE CLUTCH DRUM

Using a caliper gauge, measure the bushing inside diameter of the underdrive clutch drum as shown.

Standard inside diameter:

Front side 46.500 – 46.525 mm

(11 .83071 – 1.83169 in.)

Rear side 55.000 – 55.030 mm

(2.16535 – 2.16653 in.)

Maximum inside diameter:

Front side 46.570 mm (1.83346 in.)

Rear side 55.080 mm (2.16850 in.)

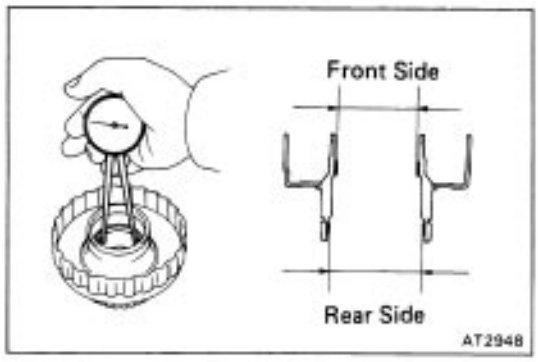

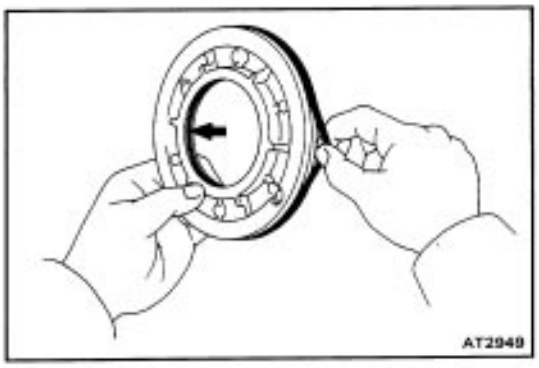

ASSEMBLY OF UNDERDRIVE CLUTCH

1. INSTALL UNDERDRIVE CLUTCH PISTON INTO CLUTCH DRUM

(a) Install the two new O–rings to the piston.

HINT: Before installing, coat the O–rings with ATF.

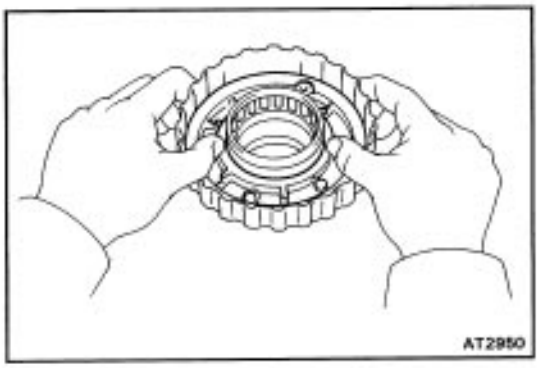

(b) Install the underdrive clutch piston into the clutch drum.

HINT: Be careful not to damage the O–rings.

2. INSTALL SPRING SEAT AND RETURN SPRING

(a) Install the spring seat and return spring to the underdrive clutch as shown.

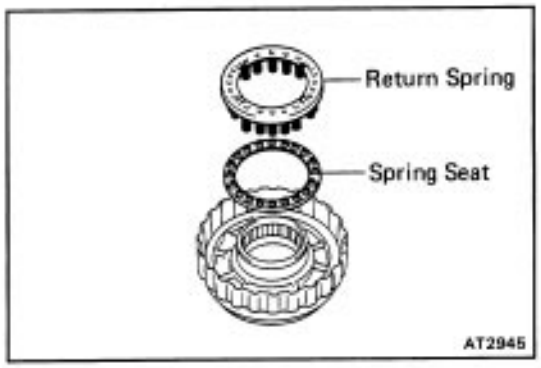

(b) Using SST and press, compress the return spring retainer.

SST 09350–32014 (09351–32070)

(c) Using snap ring pliers, install the snap ring.

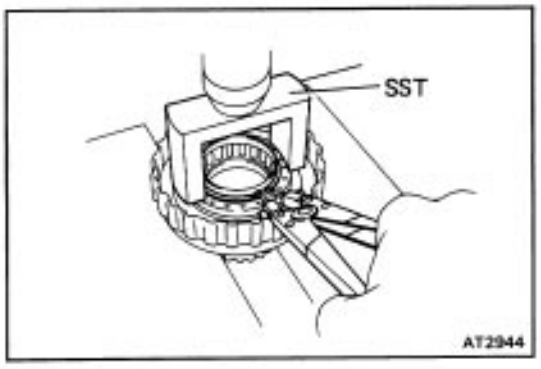

HINT: Install the snap ring as shown.

(d) Remove SST.

SST 09350–32014 (09351–32070)

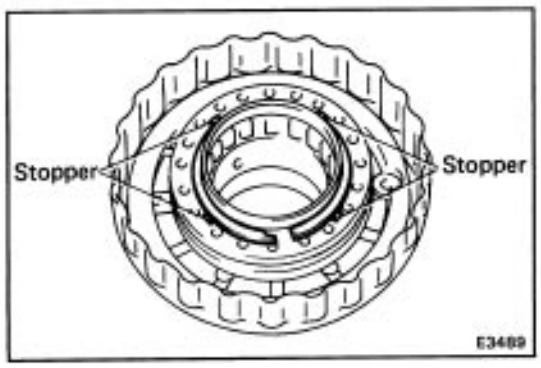

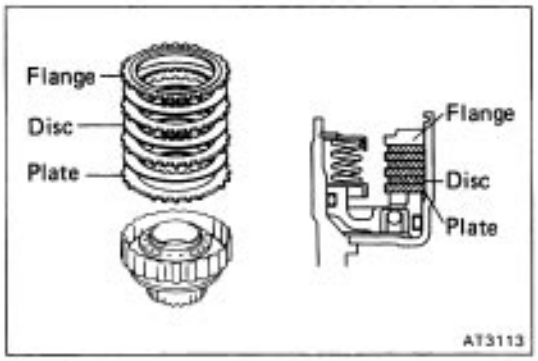

3. INSTALL PLATES, DISCS AND FLANGE

Install in order: D = Disc P = Plate F = Flange

P – D – P – D – P – D – F

HINT: Install the flange the flat end facing downward.

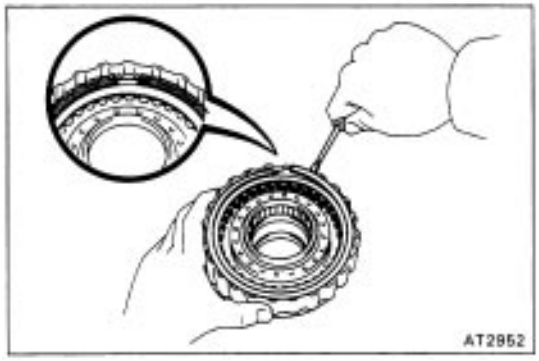

4. INSTALL SNAP RING

Install the snap ring to the underdrive clutch.

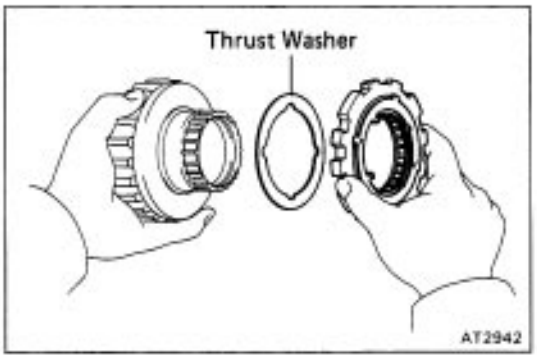

5. INSTALL ONE–WAY CLUTCH TO CLUTCH DRUM

(a) Install the thrust washer to clutch drum.

(b) Install the one–way clutch with the claw of retainer up.

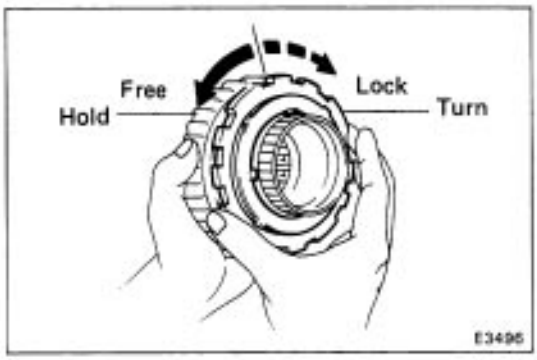

6. CHECK OPERATION OF ONE–WAY CLUTCH

Hold the one–way clutch drum and turn the one–way clutch. Check that the one–way clutch turns freely counterclockwise and lock clockwise.

Underdrive Brake and B4 Accumulator Piston (A240L A241H)

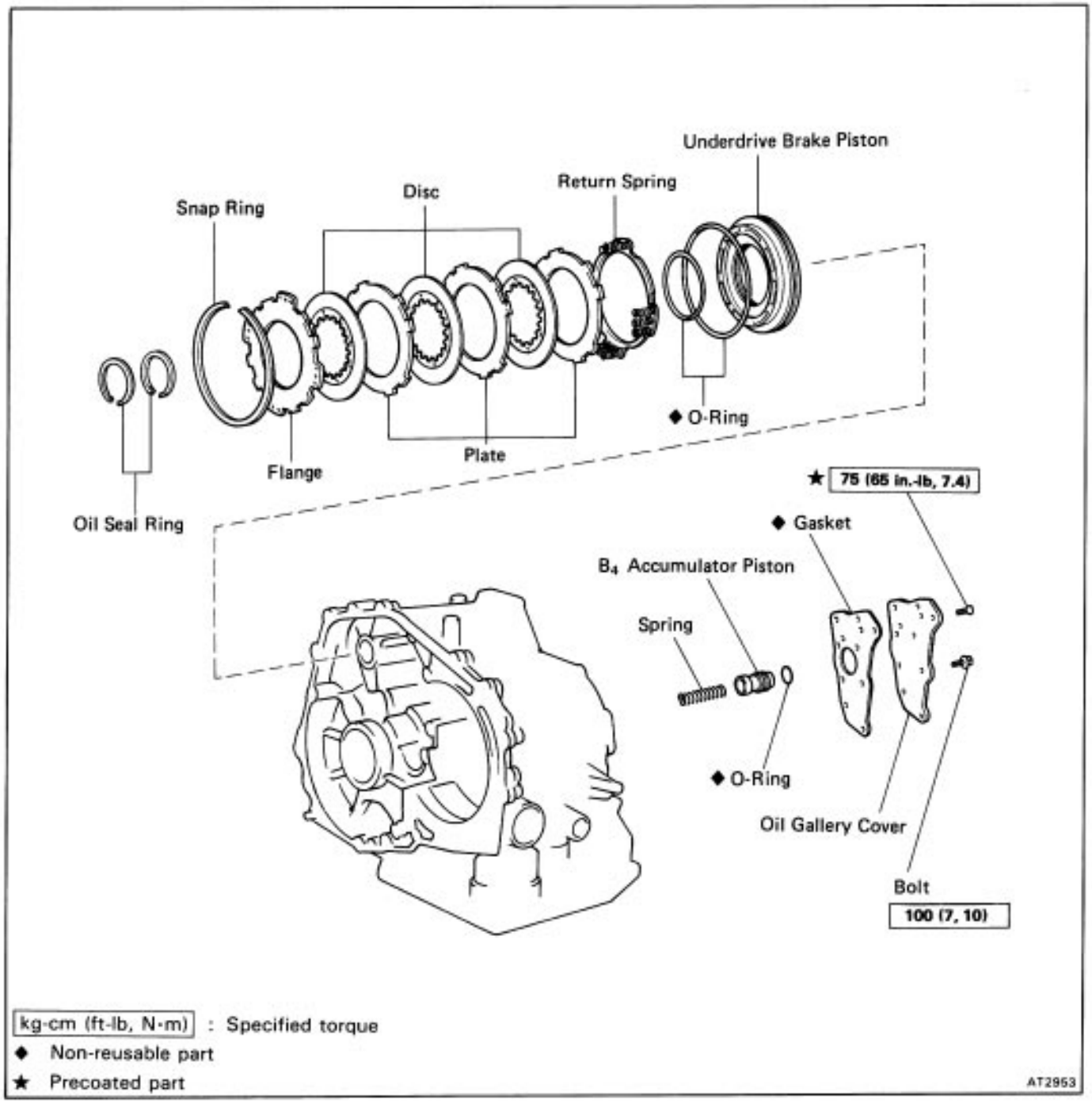

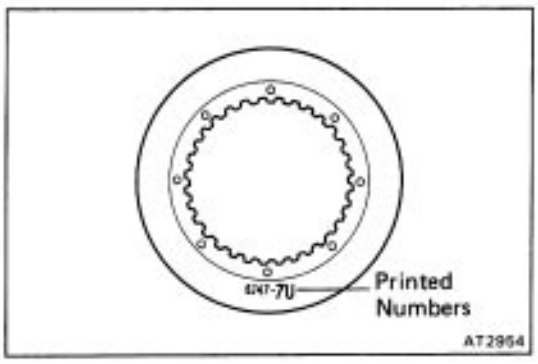

INSPECTION OF UNDERDRIVE BRAKE COMPONENTS

INSPECT DISCS, PLATES AND FLANGES

Check that the sliding surface of disc, plate and flange worn or burnt. If necessary, replace them.

HINT:

- If the lining of the disc is exfoliated or discolored, or even a part of the printed numbers are defaced, replace the disc.
- Before assembling new discs, soak them in ATF for at least two hours.

Valve Body (A131L)

COMPONENTS

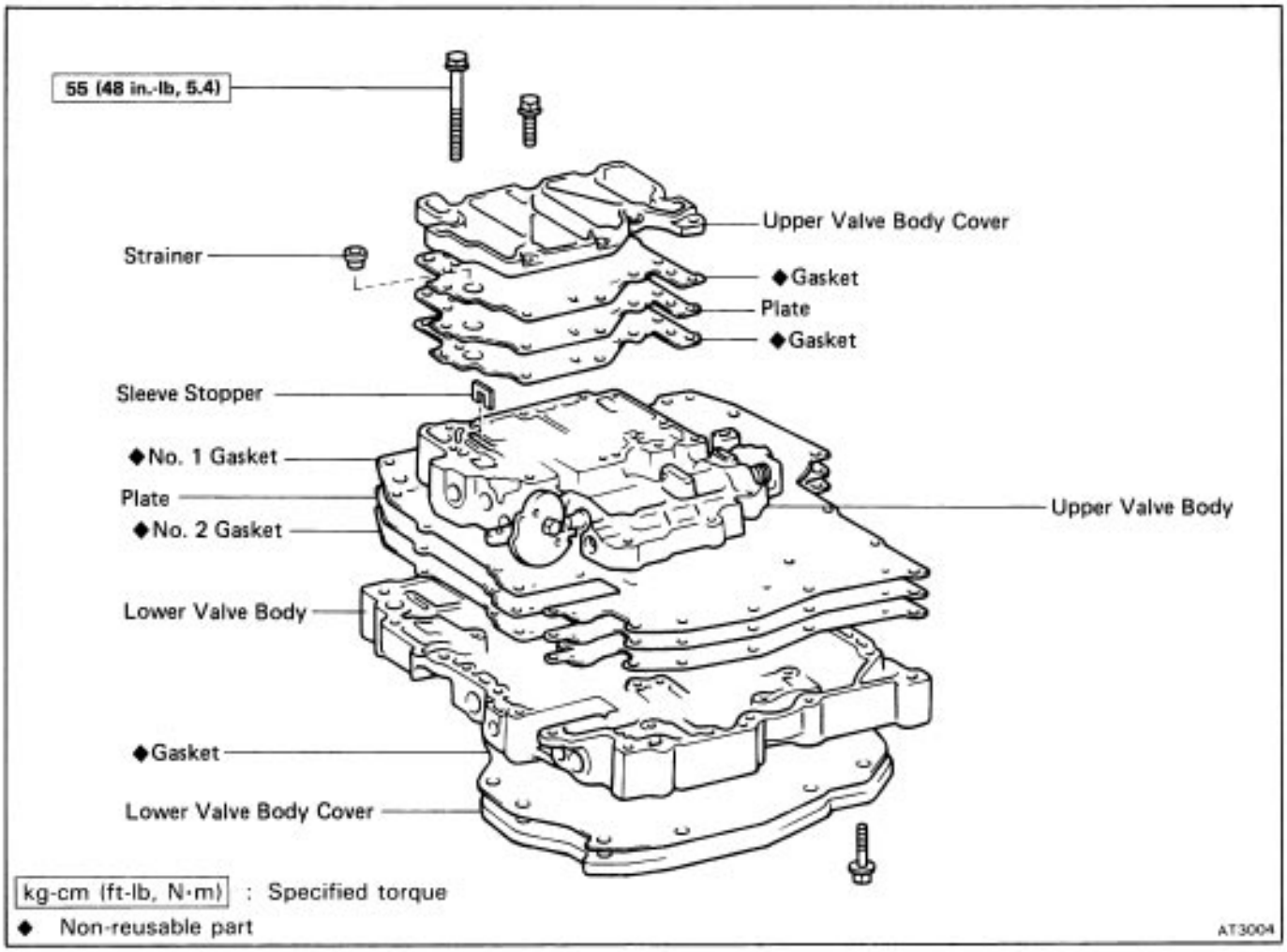

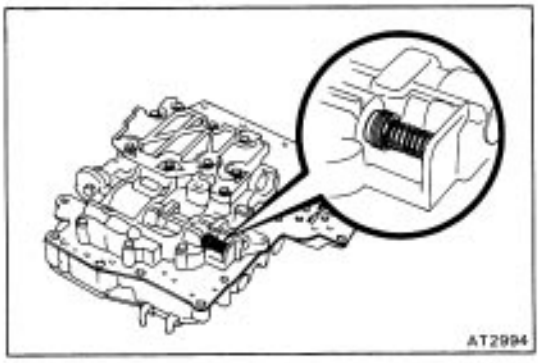

(Disassembly of Valve Body)

1. NOTE THE NUMBER OF ADJUSTING RINGS

HINT: Count the number of adjusting rings before disassembly of the valve body because the throttle pressure is changed according to the number. (Some of the valve bodies do not have any adjusting rings.)

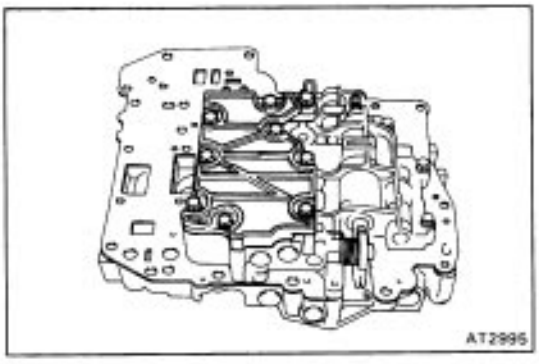

2. REMOVE UPPER VALVE BODY COVER

Remove the nine bolts and upper valve body cover.

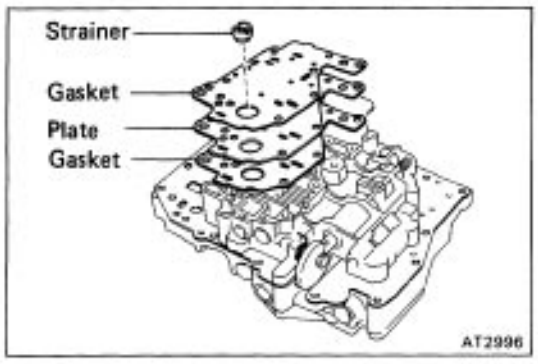

3. REMOVE STRAINER, GASKET, PLATE AND SLEEVE STOPPER FROM UPPER VALVE BODY

(a) Remove the strainer, two gaskets and plate.

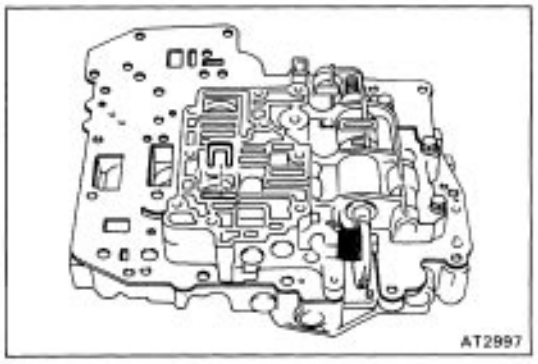

(b) Remove the sleeve stopper.

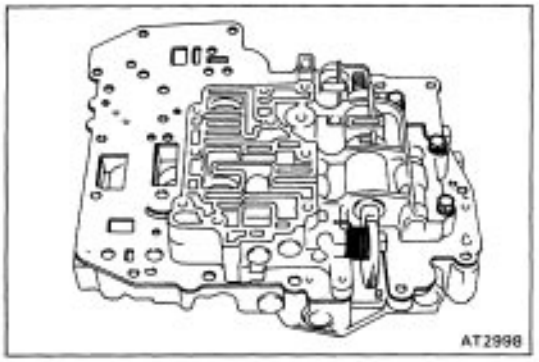

4. REMOVE BOLTS FROM UPPER VALVE BODY

Remove the three bolts from upper valve body.

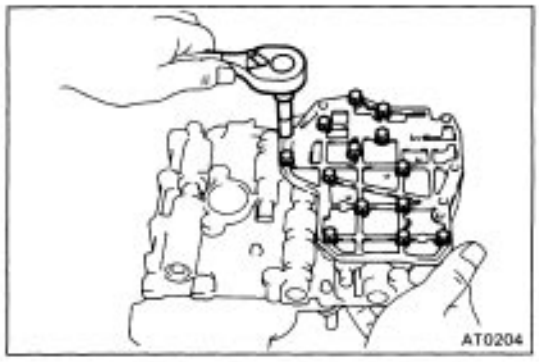

5. REMOVE LOWER VALVE BODY COVER

(a) Remove the fourteen bolts.

(b) Remove the lower valve body cover and gasket.

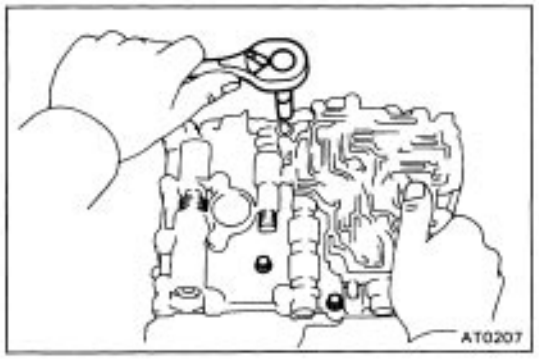

6. REMOVE BOLTS FROM LOWER VALVE BODY

Remove the three bolts from lower valve body.

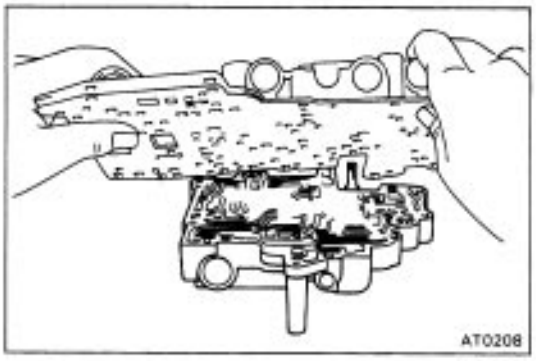

7. LIFT OFF LOWER VALVE BODY AND PLATE AS SINGLE UNIT

Hold the plate to the lower valve body and lift off the lower valve body.

HINT: Be careful that the check balls do not fall out.

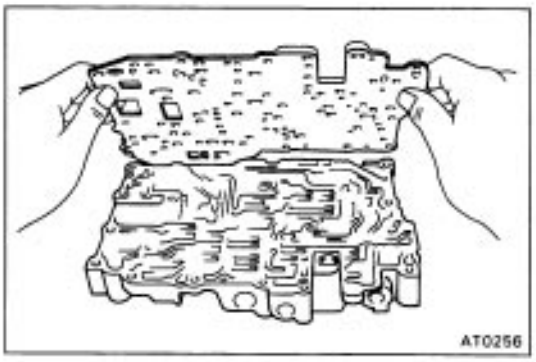

8. REMOVE PLATE AND GASKETS

(Sectional View of Valve Body)

Upper Valve Body

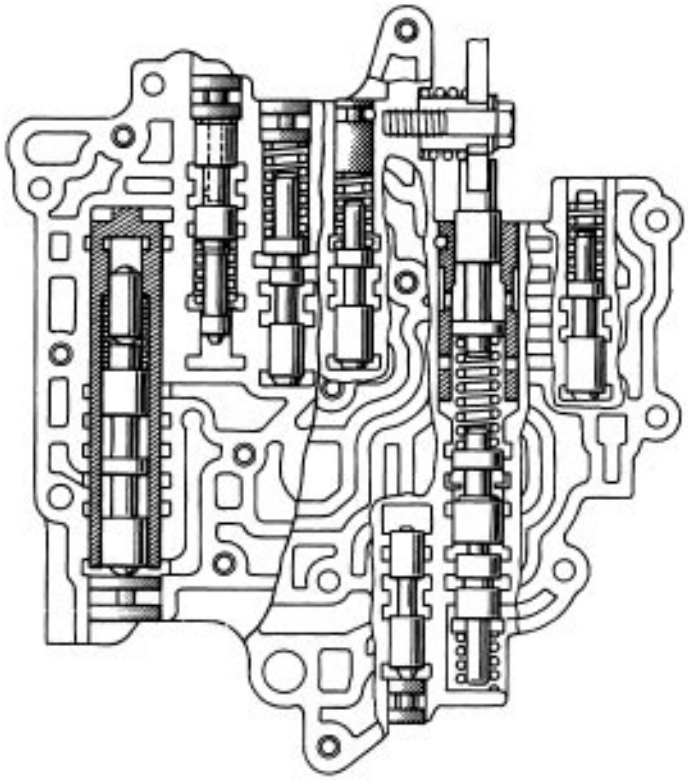

D5407

Lower Valve Body

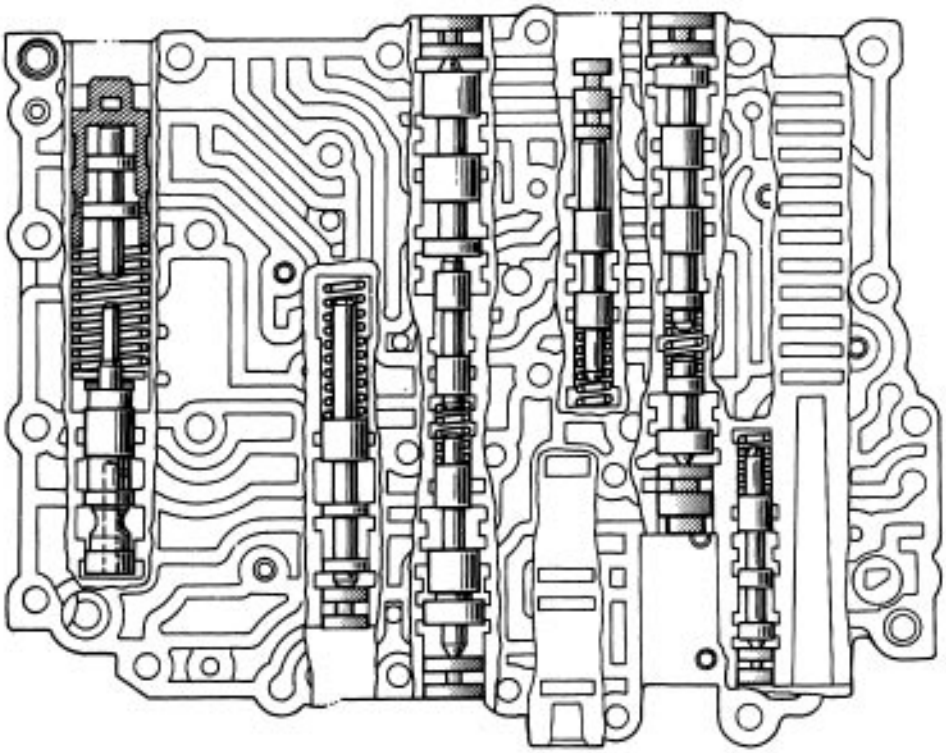

D5447

(Upper Valve Body)

COMPONENTS

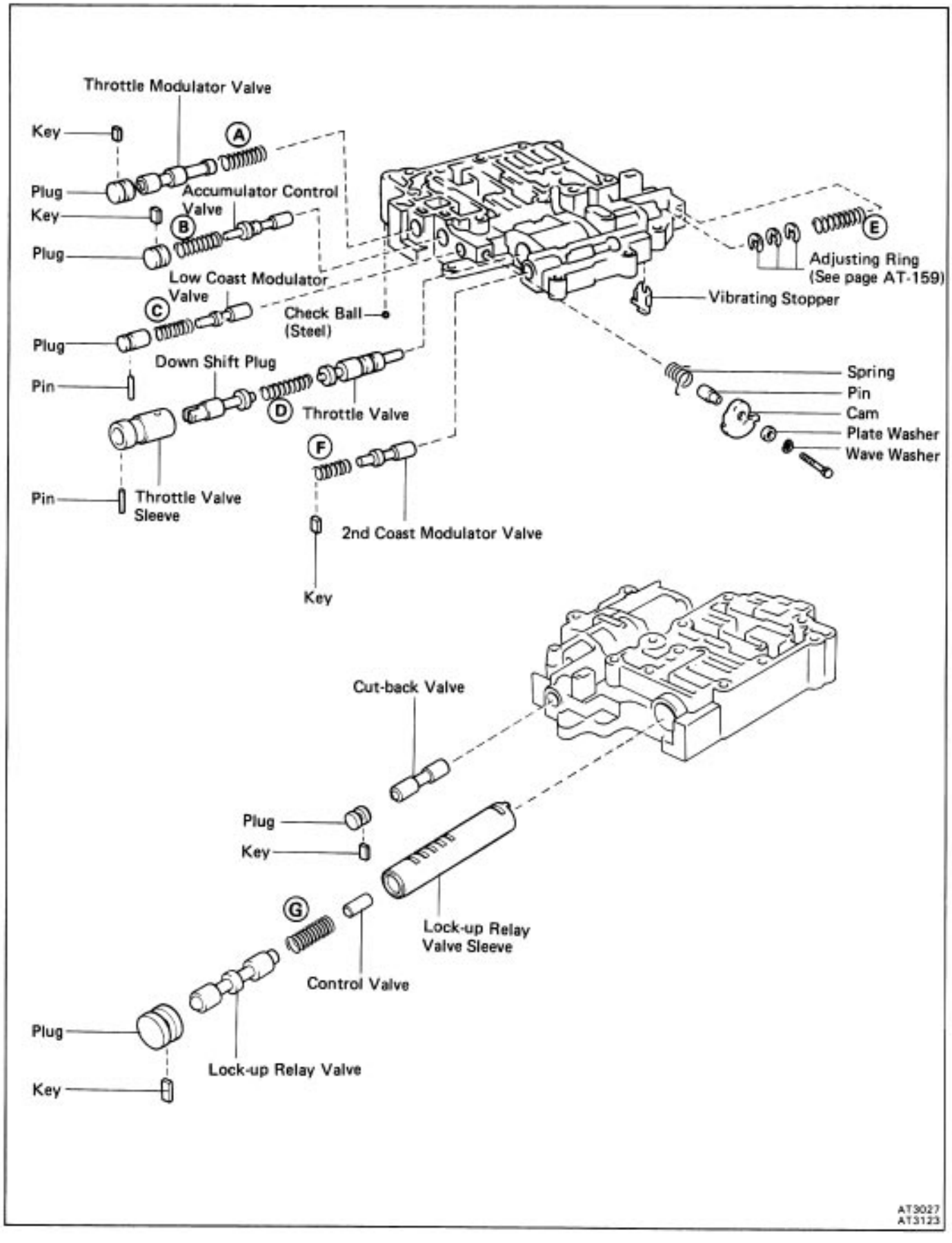

SPECIFICATIONS OF VALVE BODY SPRINGS

Spring		Free Length mm (in.)	Coil Outer Diameter mm (in.)	Number of Coils	Color
Ⓐ	Throttle Modulator Valve Spring	21.7 (0.854)	9.5 (0.374)	9.5	None
Ⓑ	Accumulator Control Valve Spring	33.2 (1.307)	10.4 (0.409)	13.5	None
Ⓒ	Low Coast Modulator Valve Spring	23.4 (0.921)	7.9 (0.311)	11.5	Red
Ⓓ	Down Shift Plug Spring	29.8 (1.173)	8.7 (0.343)	13.5	White
Ⓔ	Throttle Valve Spring	30.7 (1.209)	9.2 (0.362)	9.5	None
Ⓕ	2nd Coast Modulator Valve Spring	20.9 (0.823)	8.5 (0.335)	10.0	Light Green
Ⓖ	Lock–up Relay Valve Spring	26.6 (1.047)	10.2 (0.402)	11.5	White

HINT: During re–assembly please refer to the spring specifications above to help discriminate between the different springs,

LOCATION OF KEYS PINS VIBRATING STOPPER AND CHECK BALL

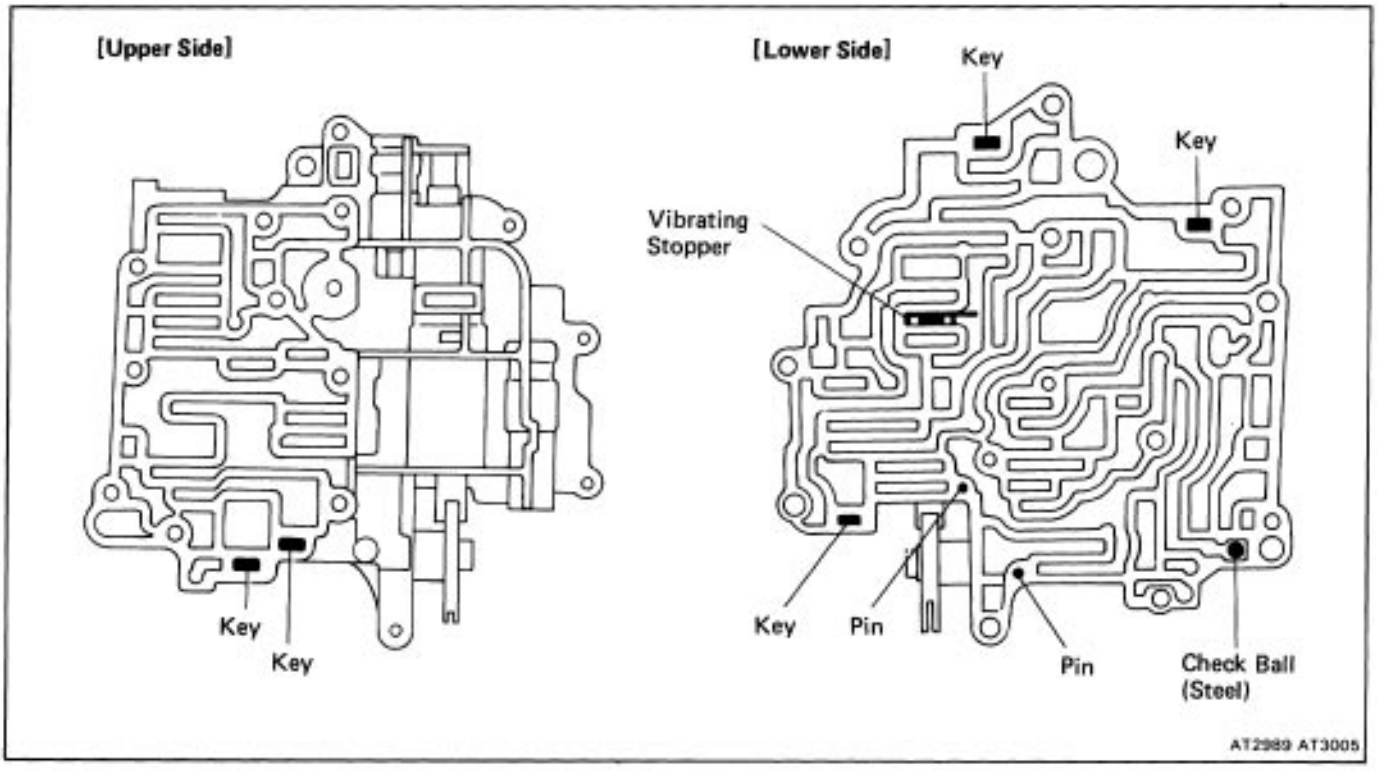

(Lower Valve Body)

COMPONENTS

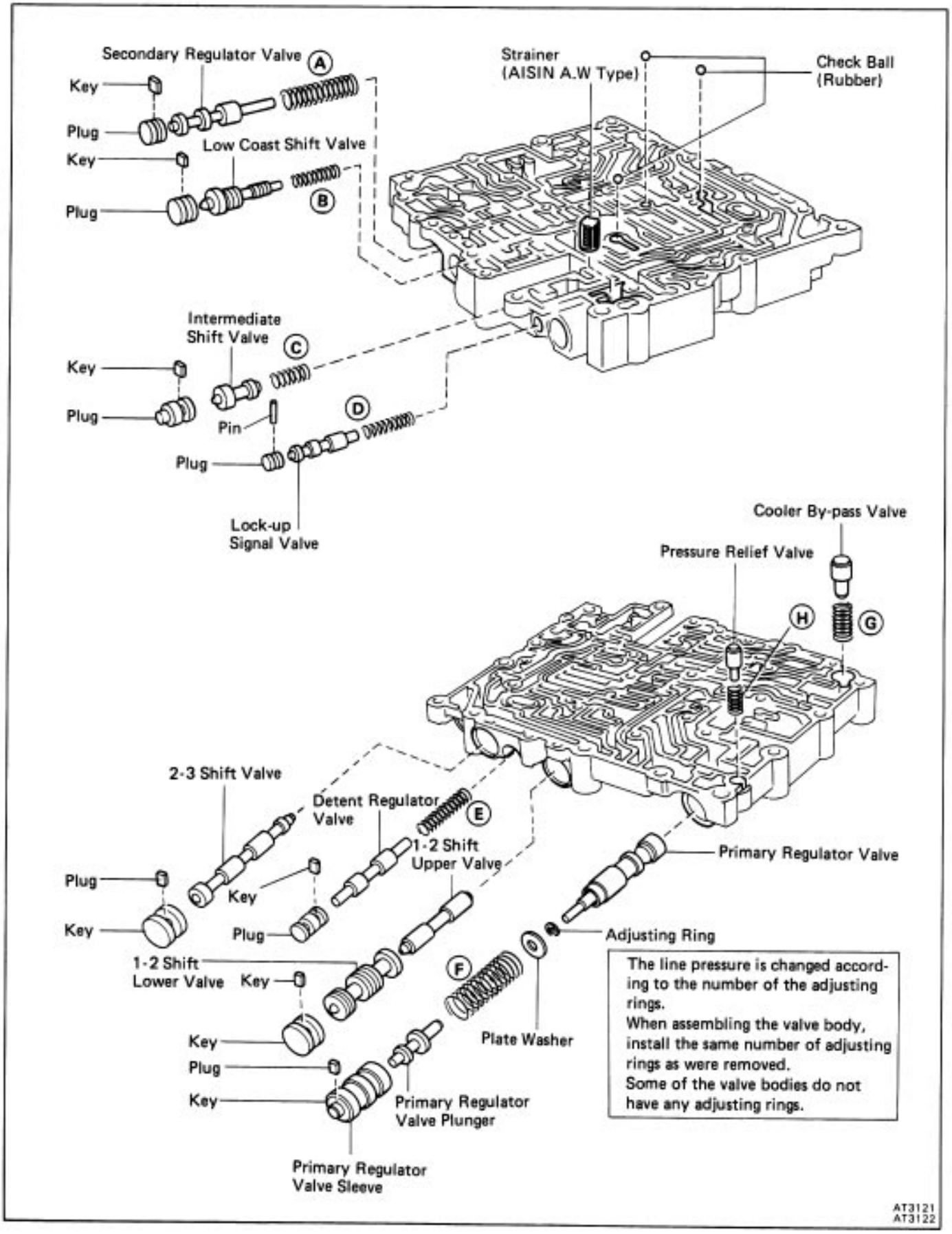

SPECIFICATIONS OF VALVE BODY SPRINGS

Spring			Free Length mm (in.)	Coil Outer Diameter mm (in.)	Number of Coils	Color
Ⓐ	Secondary Regulator Valve Spring		43.6 (1.717)	10.9 (0.429)	11.5	None
Ⓑ	1–2 Shift Valve Spring		27.2 (1.071)	6.4 (0.252)	15.5	Yellow
Ⓒ	2–3 Shift Valve Spring		27.7 (1.091)	8.3 (0.327)	11.0	None
Ⓓ	Lock–up Signal Valve Spring		31.4 (1.236)	8.0 (0.315)	14.3	Light Blue
Ⓔ	Detent Regulator Valve Spring	TOYOTA Type	29.7 (1.169)	7.9 (0.311)	12.5	Gray
		AISIN A.W. Type	29.1 (1.146)	7.9 (0.311)	12.5	Orange
Ⓕ	Primary Regulator Valve Spring		66.7 (2.626)	18.6 (0.732)	12.5	Purple
Ⓖ	Cooler By–pass Valve Spring		19.9 (0.783)	11.0 (0.433)	8.5	None
Ⓗ	Pressure Relief Valve Spring		11.2 (0.441)	6.4 (0.252)	7.5	None

HINT: During re–assembly please refer to the spring specifications above to help discriminate between the different springs.

LOCATION OF KEYS PIN CHECK BALLS AND STRAINER

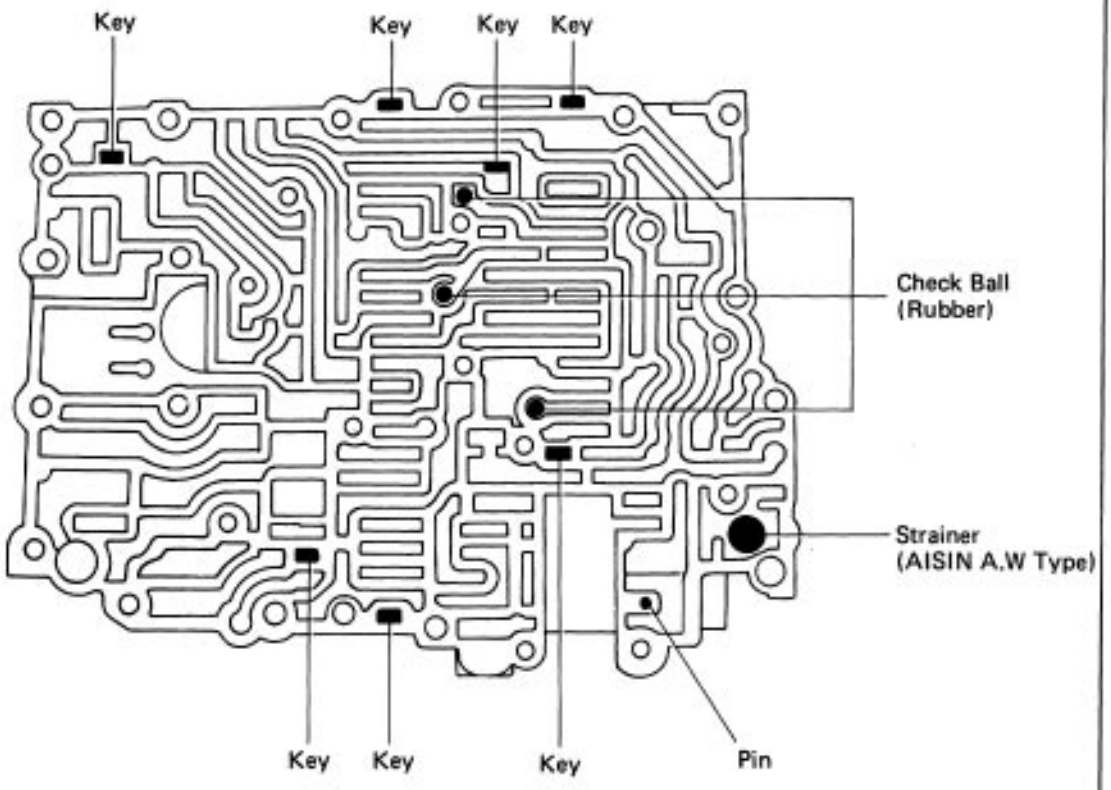

HINT: No key or pin is install in the lower side of the lower valve body.

(Assembly of Valve Body)

(See page AT–160)

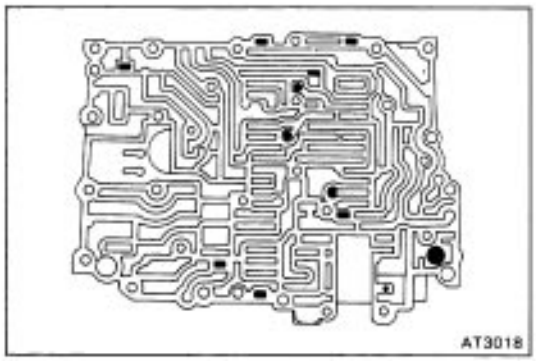

1. CHECK INSTALLATION OF KEYS, PINS, CHECK BALLS, STOPPER AND STRAINER (USA)

(a) Make sure that the keys, pin, check balls and strainer on the upper side of the lower valve body are installed correctly.

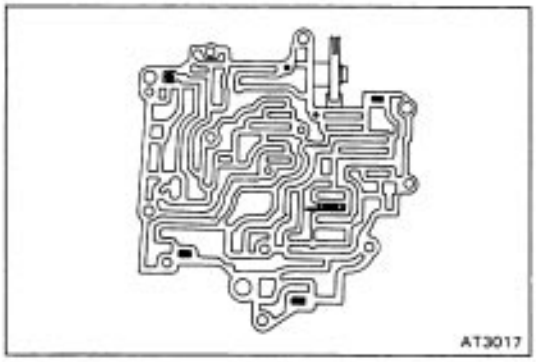

(b) Make sure that the keys, pins, vibrating stopper and check ball on the lower side of the upper valve body are installed correctly.

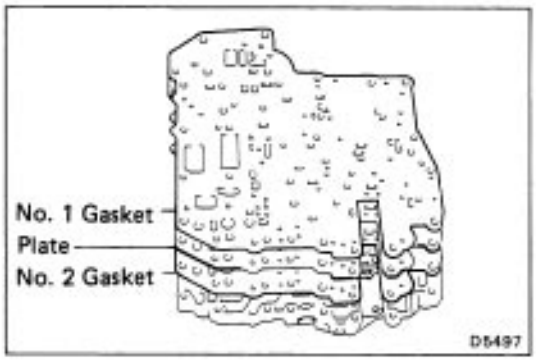

2. POSITION PLATE AND NEW GASKETS ON LOWER VALVE BODY

Position the new No. 2 gasket, the plate and then the new No. 1 gasket on the lower valve body.

HINT: Since No. 1 gasket and No. 2 gasket are similar use the illustration below to discriminate between them.

No. 1 Gasket (Upper Side)

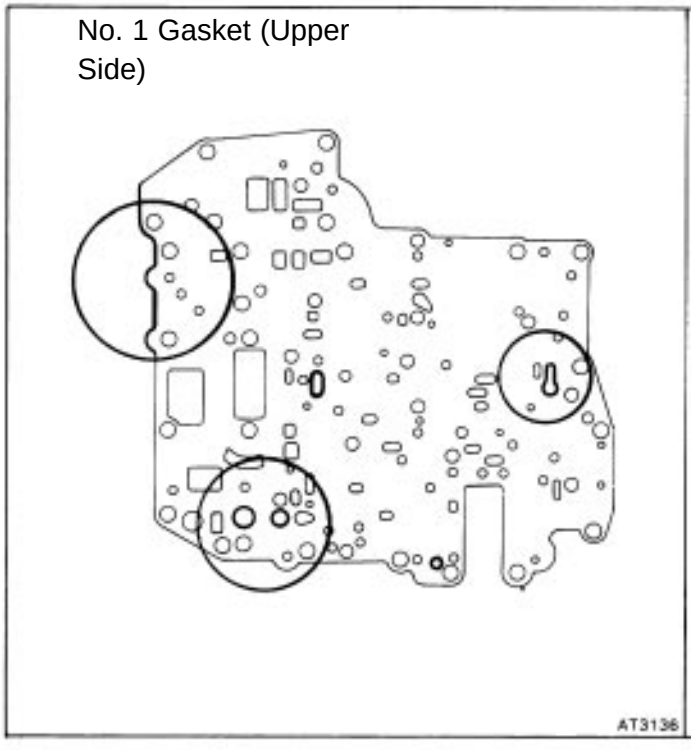

No. 2 Gasket (Lower Side)

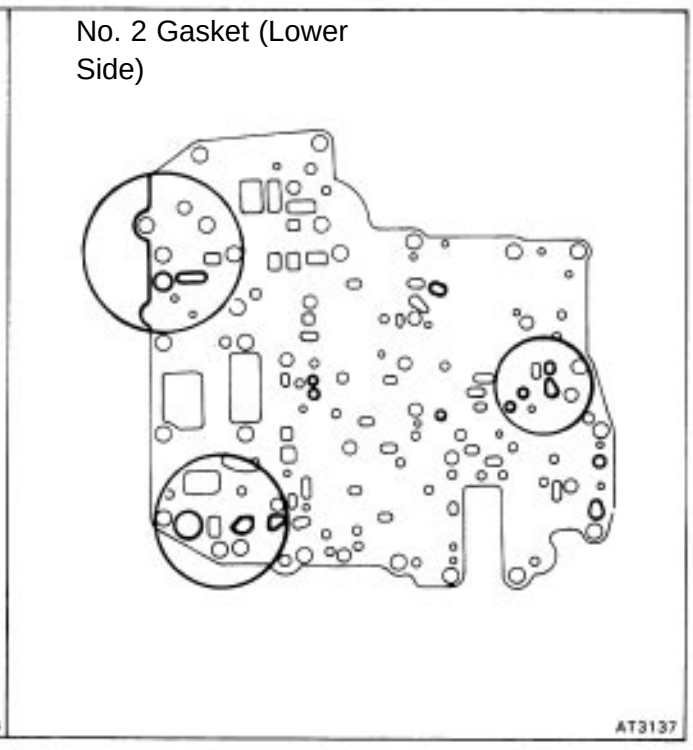

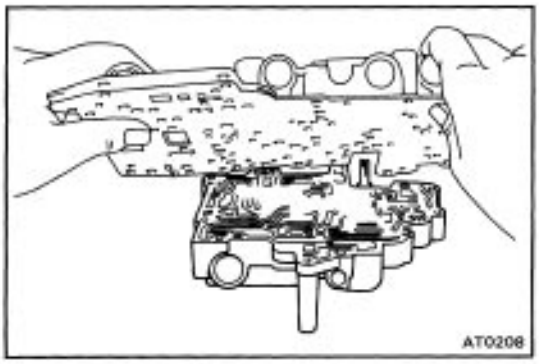

3. PLACE LOWER VALVE BODY WITH PLATE AND GASKETS ON UPPER VALVE BODY

HINT: Hold the lower valve body, gaskets and plate securely so they do not separate.

Align each bolt hole in the valve bodies with the gaskets and plate.

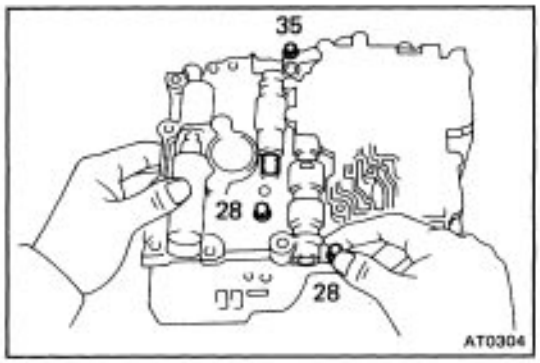

4. INSTALL AND FINGER TIGHTEN BOLTS IN LOWER VALVE BODY TO SECURE UPPER VALVE BODY

Install and finger tighten the three bolts.

HINT: Each bolt length (mm) is indicated in the figure.

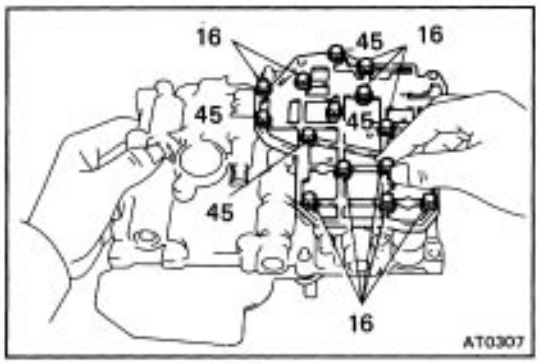

5. INSTALL LOWER VALVE BODY COVER

(a) Install the lower valve body cover over the new gasket.

(b) Install and finger tighten the four–teen bolts.

HINT: Each bolt length (mm) is indicated in the figure.

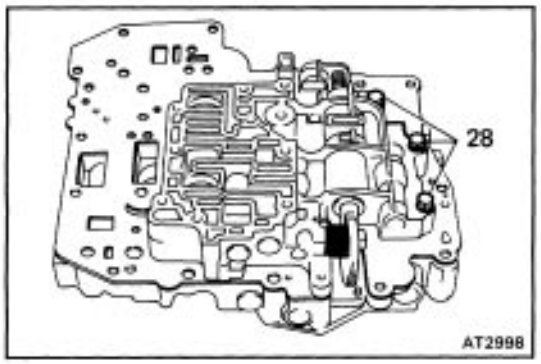

6. INSTALL AND FINGER TIGHTEN BOLTS IN UPPER VALVE BODY

Install and finger tighten the three bolts.

HINT: Each bolt length (mm) is indicated in the figure.

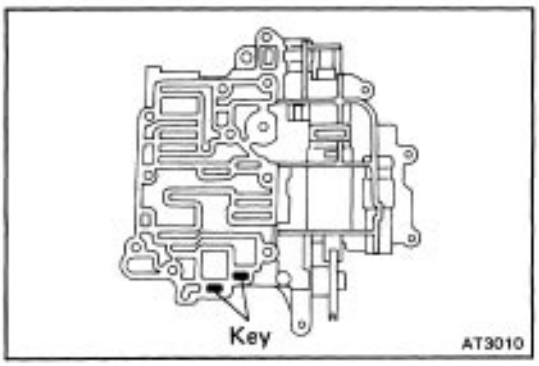

7. INSTALL UPPER VALVE BODY COVER

(a) Make sure that the keys are installed correctly.

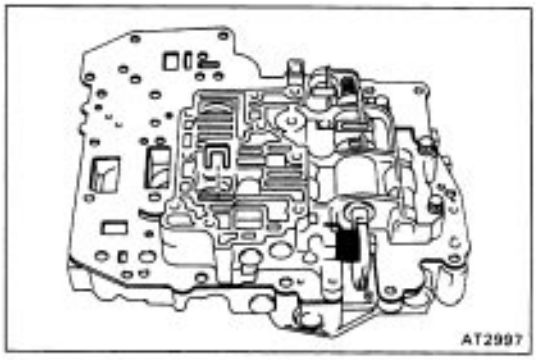

(b) Install the sleeve stopper.

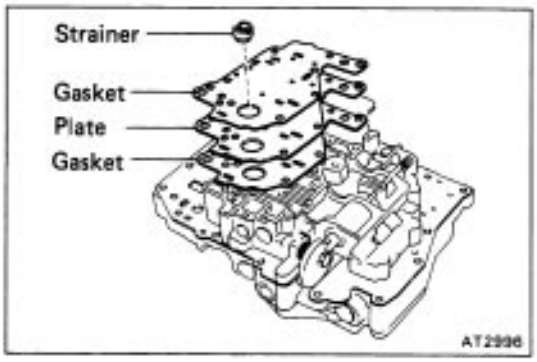

(c) Position a new gasket and plate and then another new gasket.
(d) Install the strainer onto the plate.

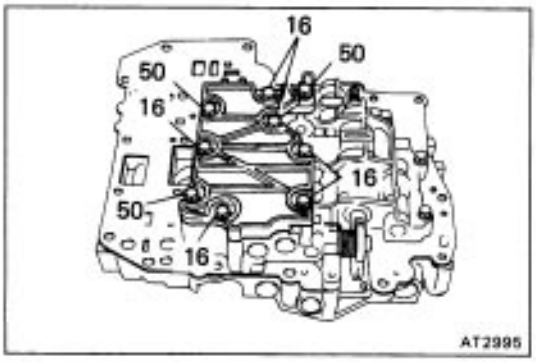

(e) Position the upper valve body cover.
M Install and finger tighten the nine bolts.
HINT: Each bolt length (mm) is indicated in the figure.

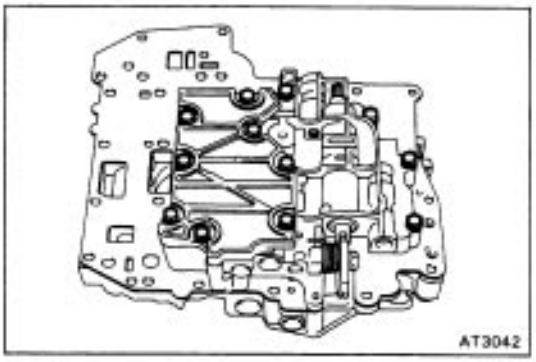

8. TIGHTEN BOLTS OF UPPER AND LOWER VALVE BODIES

(a) Tighten the twelve bolts in the upper valve body.
Torque: 55 kg–cm (48 in.–lb, 54 N–m)

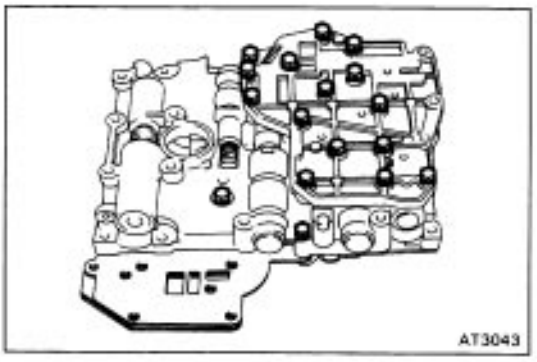

(b) Tighten the seventeen bolts in the lower valve body.
Torque: 55 kg–cm (48 in.–lb, 54 N–m)

Valve Body (A240L)

COMPONENTS

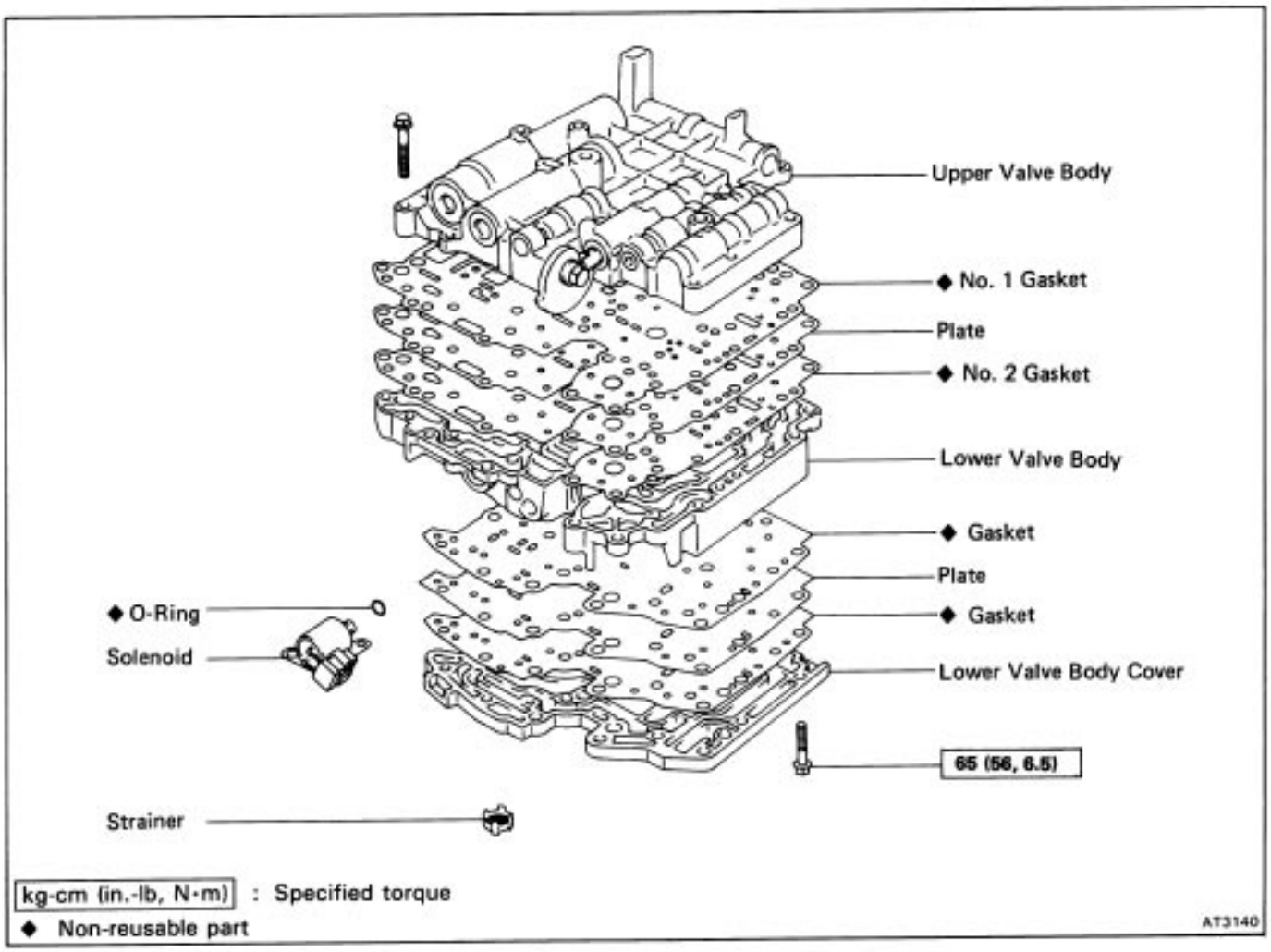

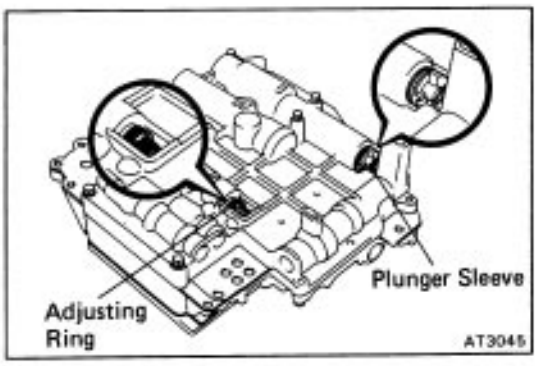

(Disassembly of Valve Body)

1. NOTE THE NUMBERS OF ADJUSTING RINGS

HINT: Count the number of adjusting rings before disassembly of the valve body because the throttle pressure is changed according to the number. (Some of the valve bodies do not have any adjusting rings.)

2. NOTE THE POSITION OF PLUNGER SLEEVE

Note which step at the end of the plunger sleeve is in contact with the valve body.

HINT: Be certain to check this before disassembly because the line pressure changes according to the part of the plunger sleeve which comes into contact with the valve body.

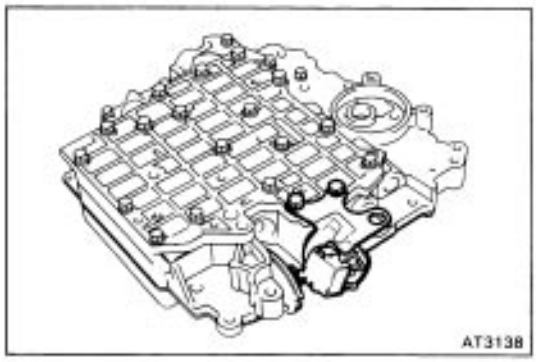

3. REMOVE SOLENOID

(a) Remove the solenoid.

(b) Remove the O–ring from the solenoid.

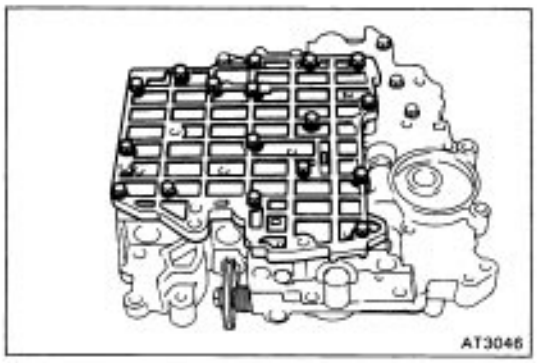

4. REMOVE LOWER VALVE BODY COVER

(a) Remove the seventeen bolts.

(b) Remove the lower valve body cover.

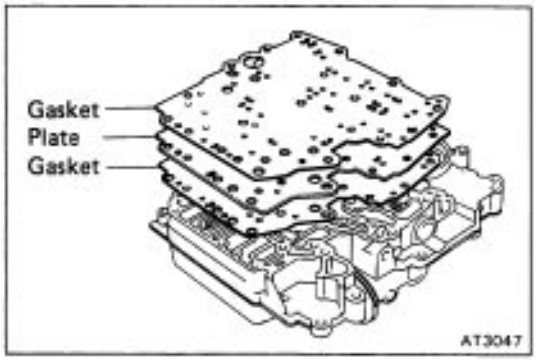

5. REMOVE GASKETS, PLATE AND STRAINER

(a) Remove the two gaskets and plate.

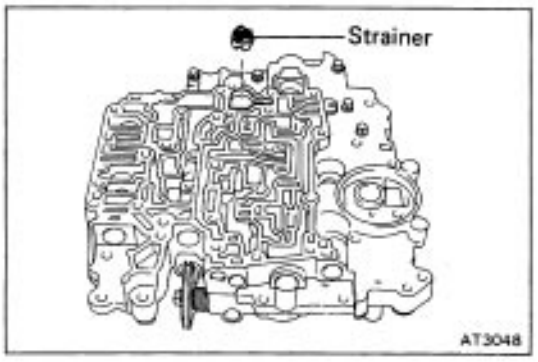

(b) Remove the strainer.

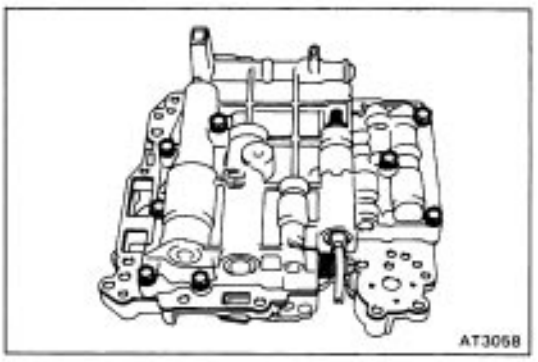

6. REMOVE BOLTS FROM UPPER VALVE BODY

Remove the eight bolts from the upper valve body.

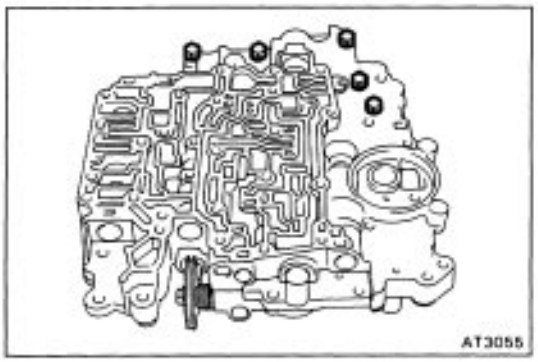

7. REMOVE BOLTS FROM LOWER VALVE BODY

Remove the five bolts from the lower valve body.

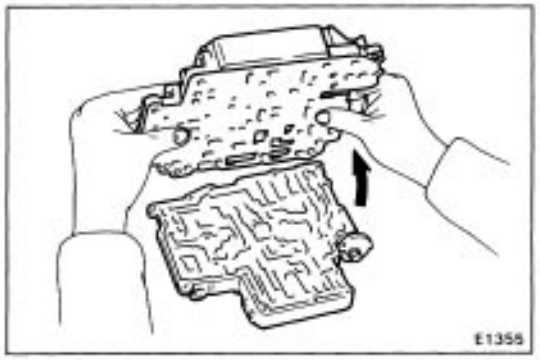

8. LIFT OFF LOWER VALVE BODY AND PLATE AS SINGLE UNIT

Hold the plate to the lower valve body and lift off the lower valve body.

HINT: Be careful that the valves, springs and strainer do not fall out.

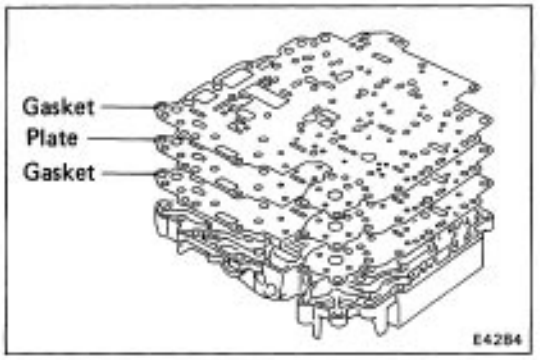

9. REMOVE PLATE AND GASKETS

(Upper Valve body)

COMPONENTS

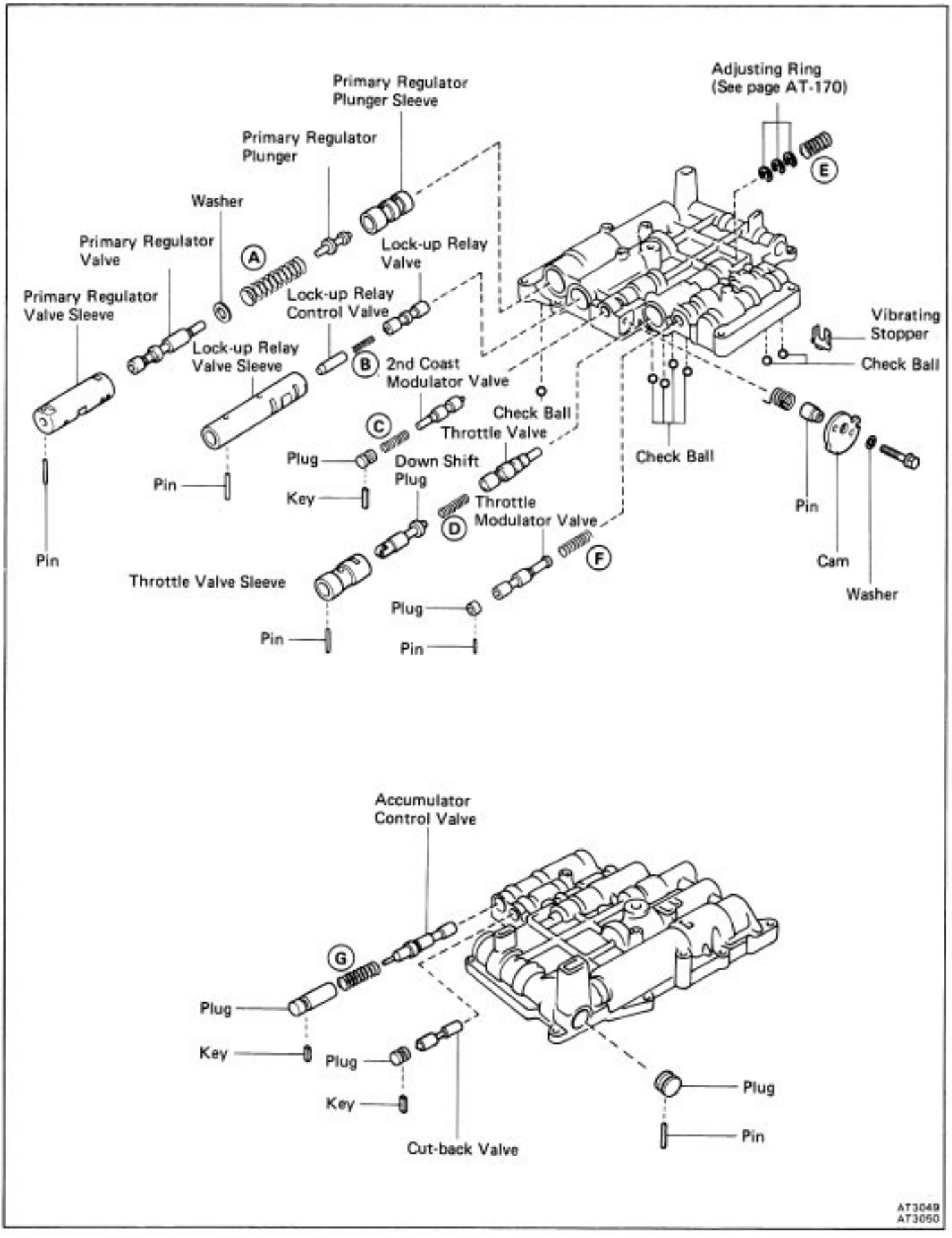

SPECIFICATIONS OF VALVE BODY SPRING

Spring		Free Length mm (in.)	Coil Outer Diameter mm (in.)	Number of Coils	Color
Ⓐ	Primary Regulator Valve Spring	66.7 (2.626)	18.6 (0.732)	12.5	Purple
Ⓑ	Lock–up Relay Valve Spring	18.8 (0.740)	5.1 (0.201)	14.5	None
Ⓒ	2nd Coast Modulator– Valve Spring	29.6 (1.165)	8.3 (0.327)	12.5	Red
Ⓓ	Down Shift Plug Spring	29.8 (1.173)	8.7 (0.343)	13.5	White
Ⓔ	Throttle Valve Spring	29.2 (1.150)	9.2 (0.362)	9.5	Light Green
Ⓕ	Throttle Modulator Valve Spring	29.9 (1.177)	9.0 (0.354)	15.5	Green
Ⓖ	Accumulator Control Valve Spring	35.9 (1.413)	10.0 (0.394)	11.5	Blue

HINT: During re–assembly please refer to the spring specifications above to help discriminate between the different springs.

LOCATION OF KEYS PINS VIBRATING STOPPER AND CHECK BALLS

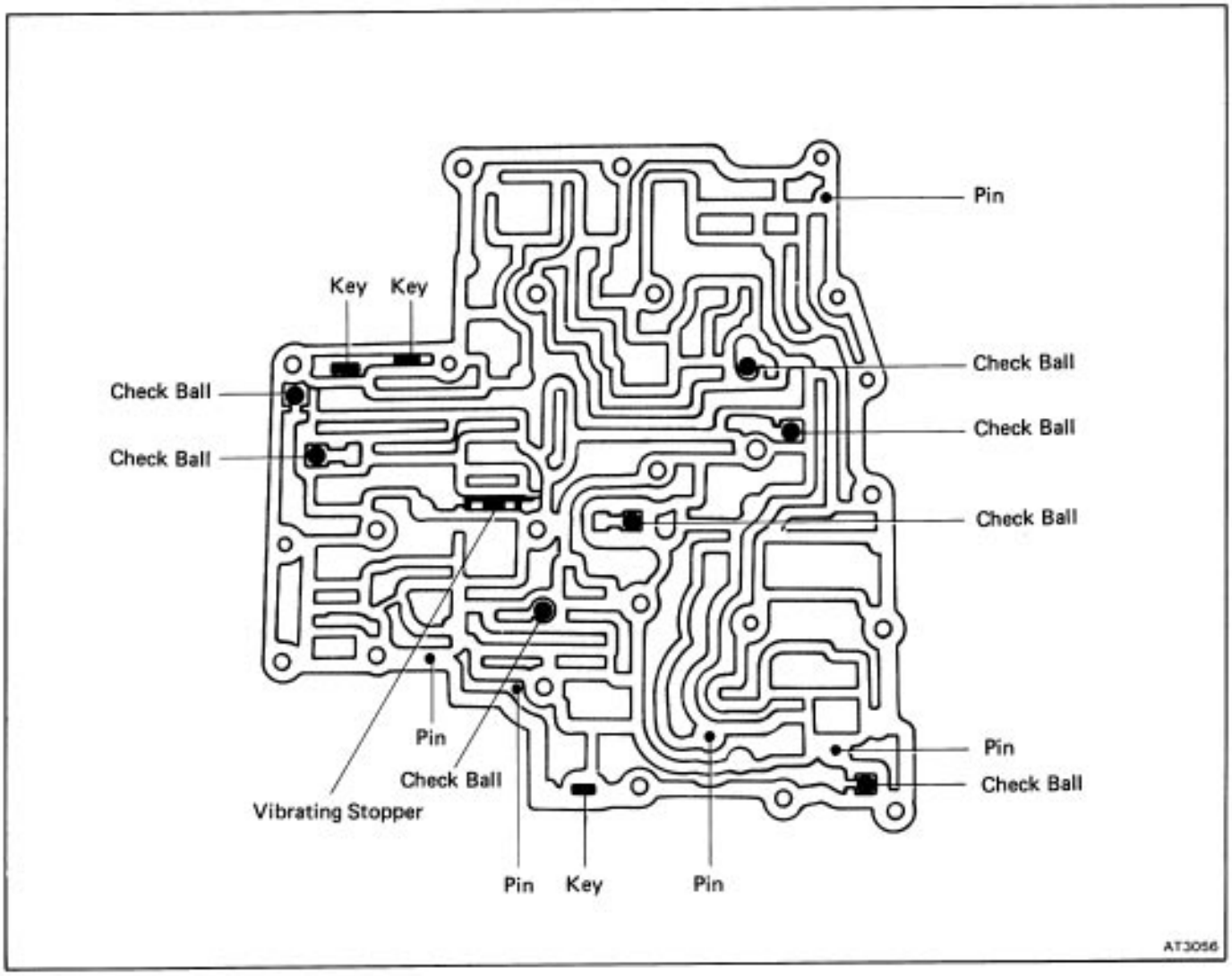

(Lower Valve Body)

COMPONENTS

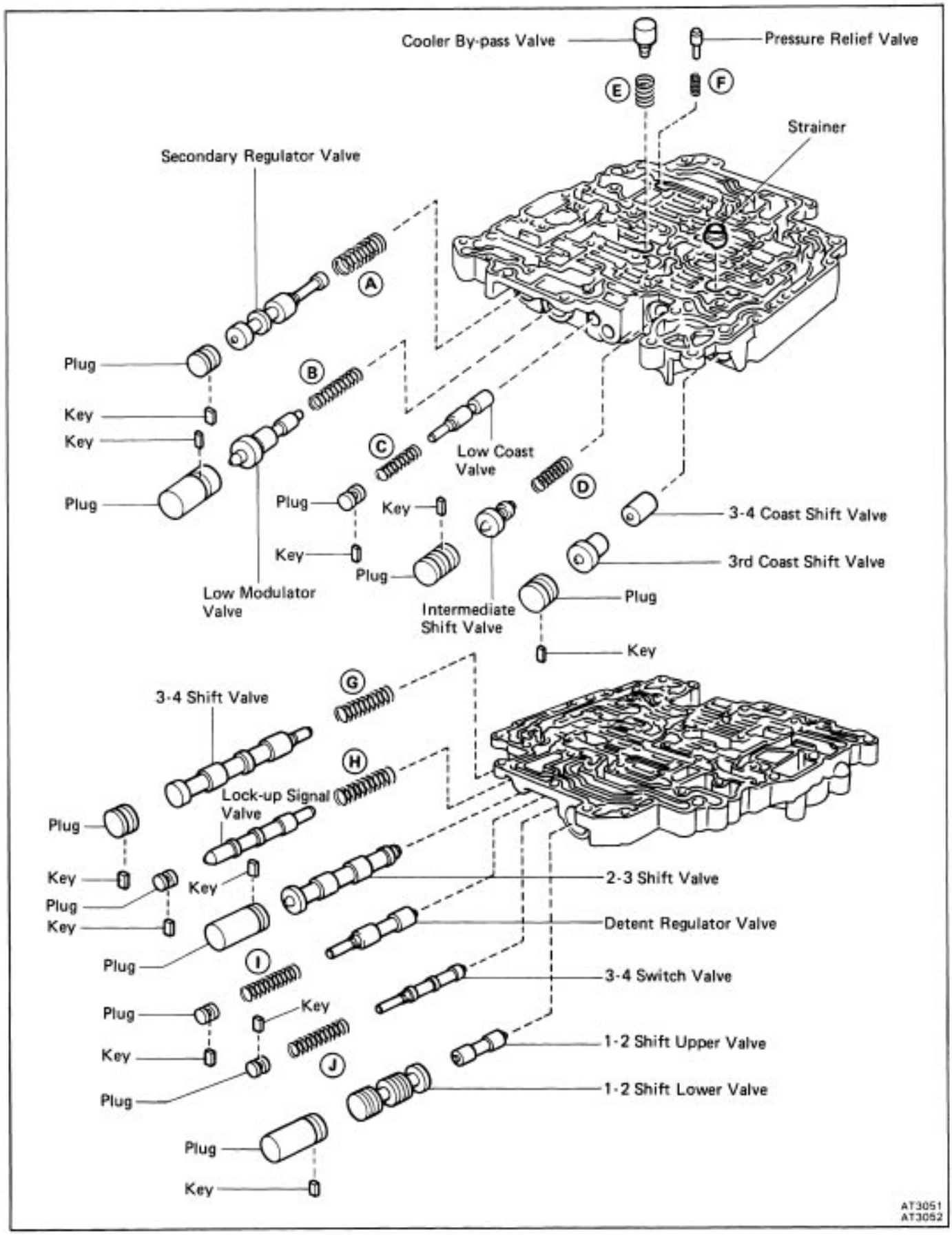

SPECIFICATIONS OF VALVE BODY SPRINGS

Spring		Free Length mm (in.)	Coil Outer Diameter mm (in.)	Number of Coils	Color
Ⓐ	Secondary Regulator Valve Spring	27.4 (1.079)	11.0 (0.433)	11.5	Blue
Ⓑ	1–2 Shift Valve Spring	27.2 (1.071)	6.4 (0.252)	15.5	Yellow
Ⓒ	Low Modulator Valve Spring	29.2 (1.150)	8.3 (0.327)	12.5	None
Ⓓ	2–3 Shift Valve Spring	27.7 (1.091)	8.3 (0.327)	11.0	None
Ⓔ	Cooler By–pass Valve Spring	18.3 (0.720)	12.0 (0.472)	6.5	Yellow
Ⓕ	Pressure Relief Valve Spring	11.2 (0.441)	6.4 (0.252)	7.5	None
Ⓖ	3–4 Shift Valve Spring	27.7 (1.091)	8.3 (0.327)	11.0	None
Ⓗ	Lock–up Signal Valve Spring	35.7 (1.406)	8.1 (0.319)	14.5	Yellow
Ⓘ	Detent Regulator Valve Spring	32.0 (1.260)	8.3 (0.327)	15.5	Brown
Ⓙ	3=4 Switch Valve Spring	30.9 (1.217)	7.0 (0.276)	18.5	None

HINT: During re–assembly please refer to the spring specifications above to help discriminate between the different springs.

LOCATION OF KEYS AND STRAINER

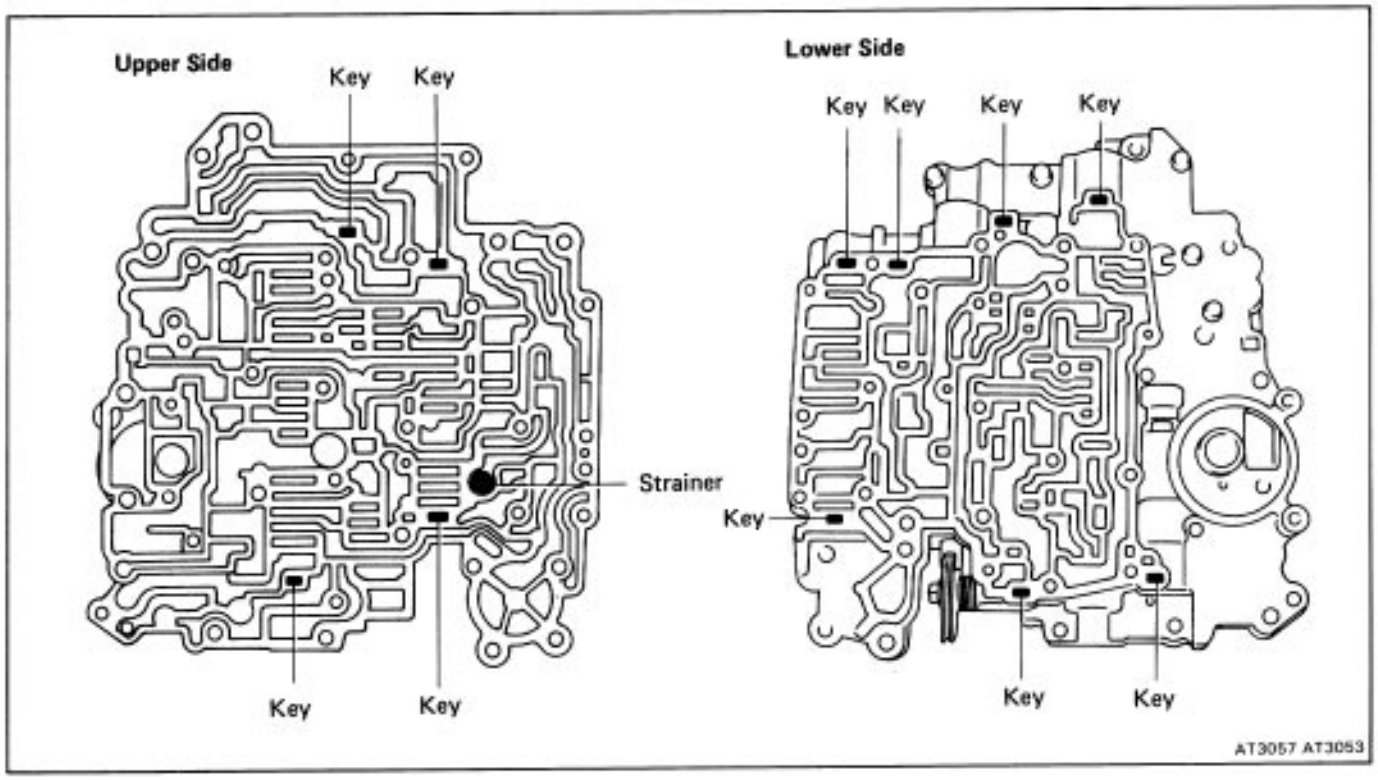

(Sectional View of Valve Body)

Upper Valve Body

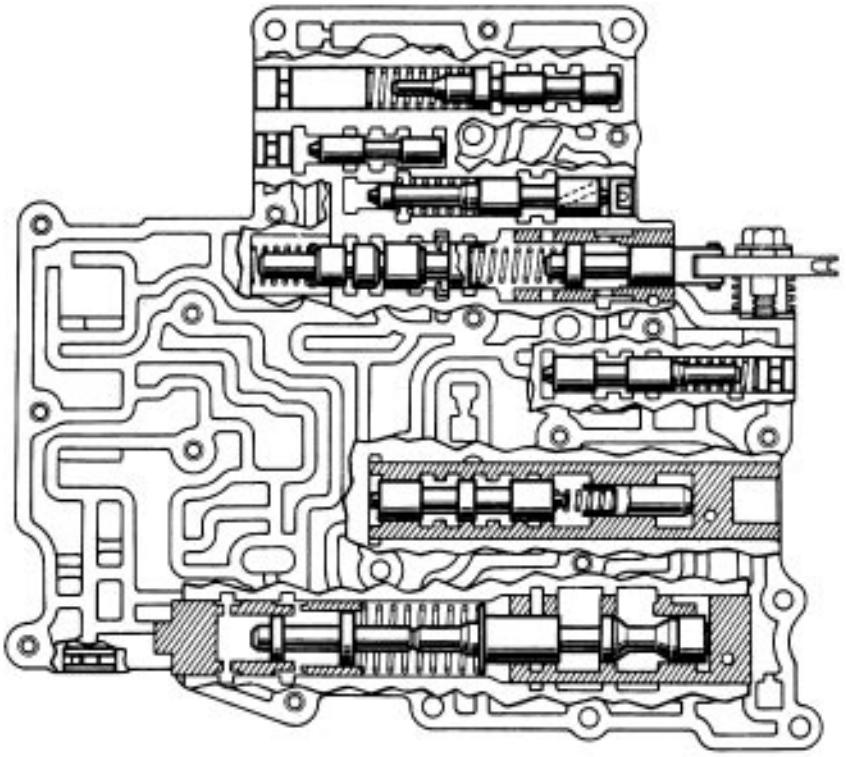

E3075

Lower Valve Body

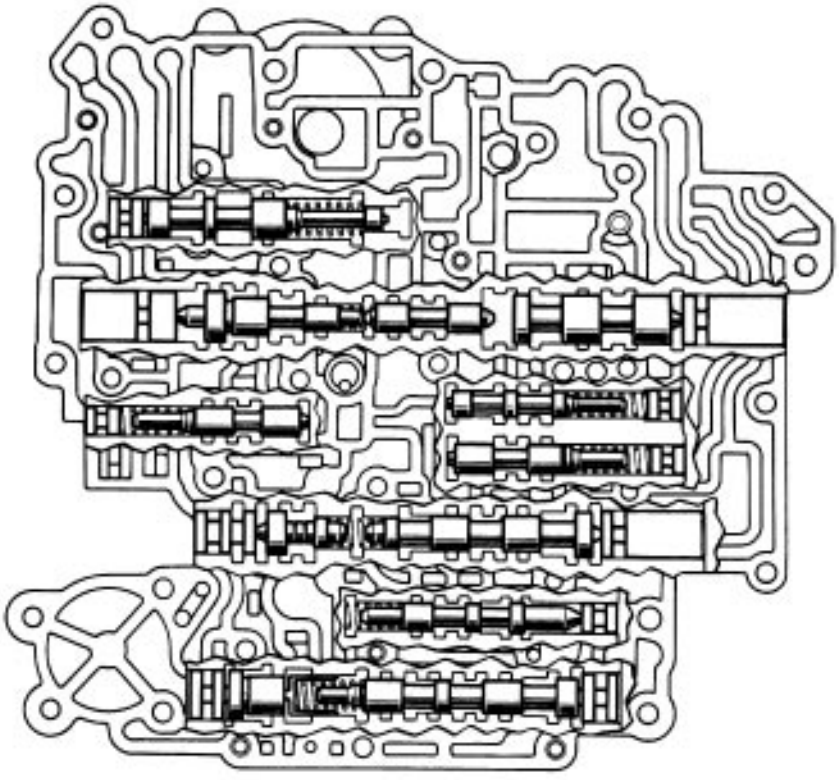

E3132

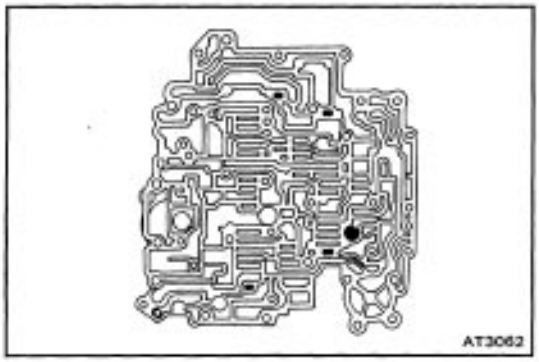

(Assembly of Valve body)

(See page AT–171)

1. CHECK INSTALLATION OF KEYS, PINS, CHECK BALLS, STOPPER AND STRAINER

(a) Make sure that the keys and strainer on the upper side of the lower valve body are installed correctly. (See page AT–177)

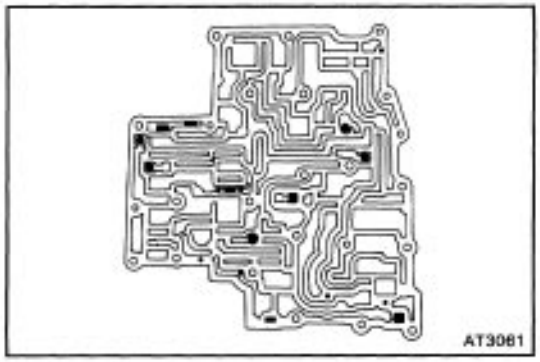

(b) Make sure that the keys, pins, check balls and vibrating stopper on the lower side of the upper valve body are installed correctly. (See page **AT–175**)

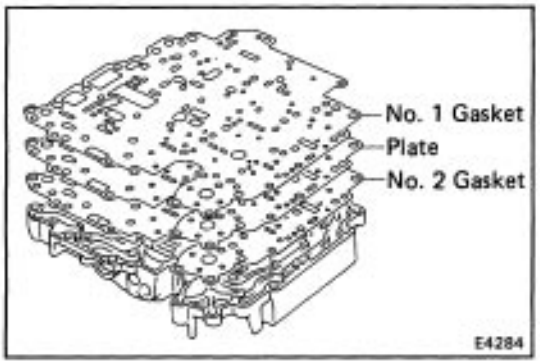

2. POSITION PLATE AND NEW GASKETS ON LOWER VALVE BODY

Position the new No. 2 gasket, the plate and then the new No. 1 gasket on the lower valve body.

HINT: Since the No. 1 gasket and No. 2 gasket are similar use the illustration below to discriminate between them.

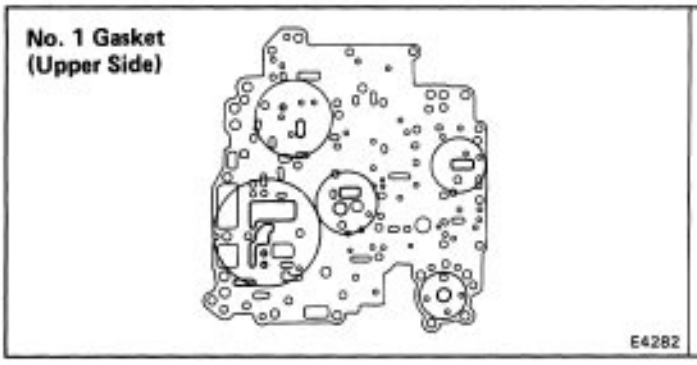

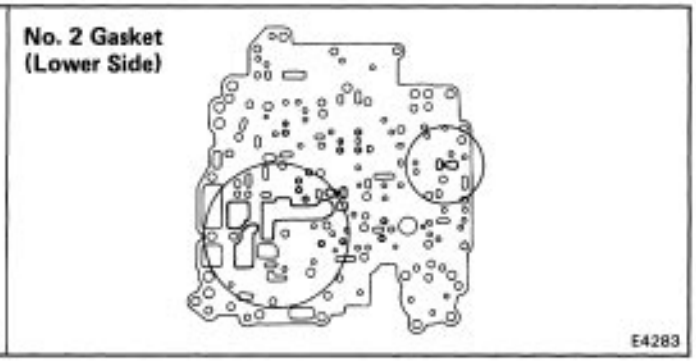

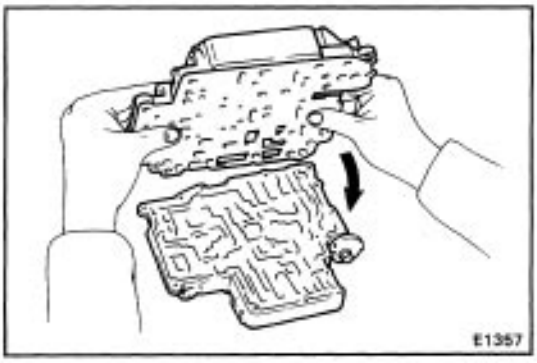

3. PLACE LOWER VALVE BODY WITH PLATE AND GASKETS ON UPPER VALVE BODY

HINT: Hold the lower valve body, gaskets and plate securely so they do not separate.

Align each bolt hole in the valve bodies with the gaskets and plate.

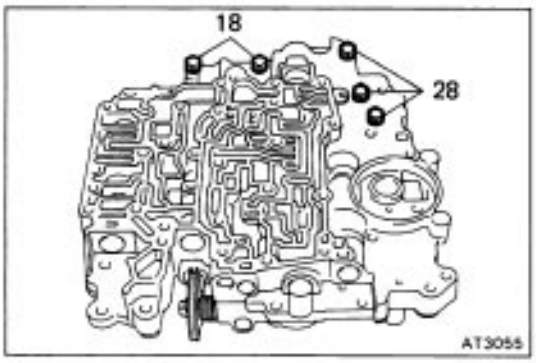

4. INSTALL AND FINGER TIGHTEN BOLTS IN LOWER VALVE BODY TO SECURE UPPER VALVE BODY

Install and finger tighten the five bolts.

HINT: Each bolt length (mm) is indicated in the figure.

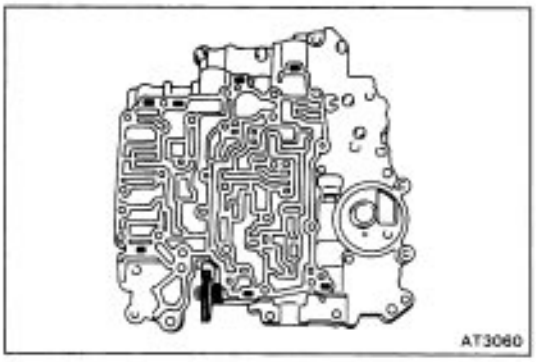

5. INSTALL LOWER VALVE BODY COVER

(a) Make sure that the keys are installed correctly. (See page AT–176)

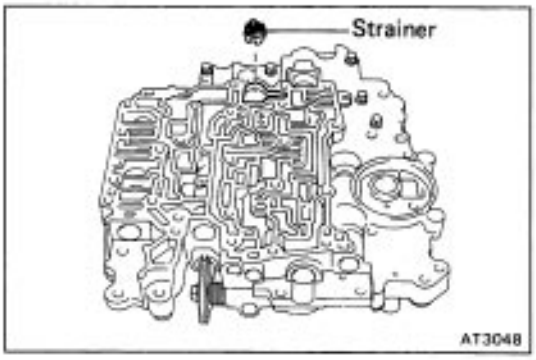

(b) Install the strainer.

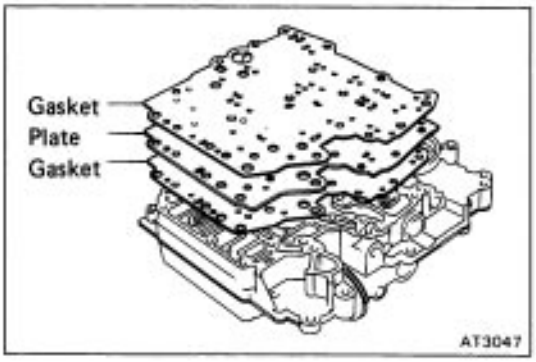

(c) Position a new gasket and plate and then another new gasket.

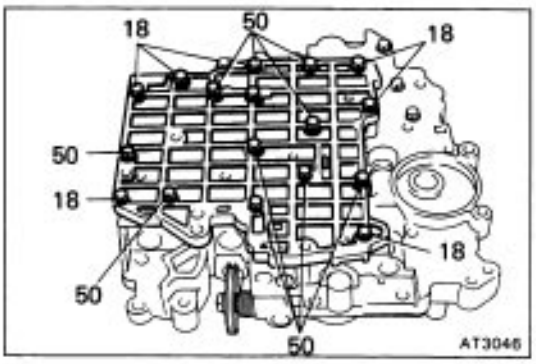

(d) Position the lower valve body cover.

(e) Install and finger tighten the seventeen bolts.

HINT: Each bolt length (mm) is indicated in the figure.

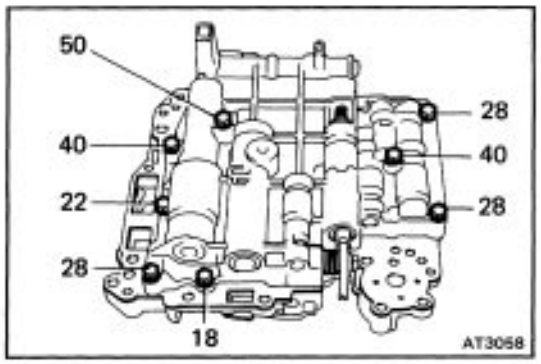

6. INSTALL AND FINGER TIGHTEN BOLTS IN UPPER VALVE BODY

Install and finger tighten the eight bolts.

HINT: Each bolt length (mm) is indicated in the figure.

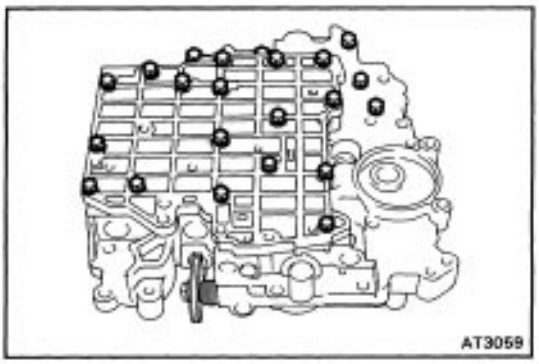

7. TIGHTEN BOLTS OF UPPER AND LOWER VALVE BODIES

(a) Tighten the twenty–two bolts in the tower valve body.

Torque: 65 kg–cm (56 in.–lb, 6.4 N–m)

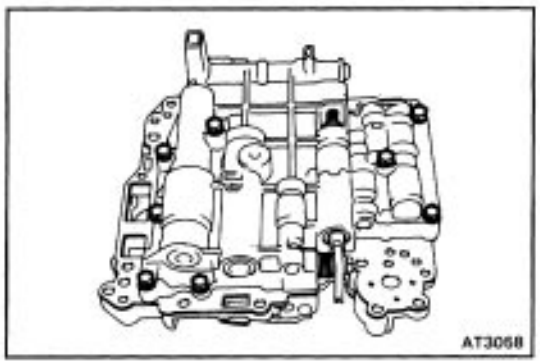

(b) Tighten the eight bolts in the upper valve body.

Torque: 65 kg–cm (56 in.–lb, 6.4 N–m)

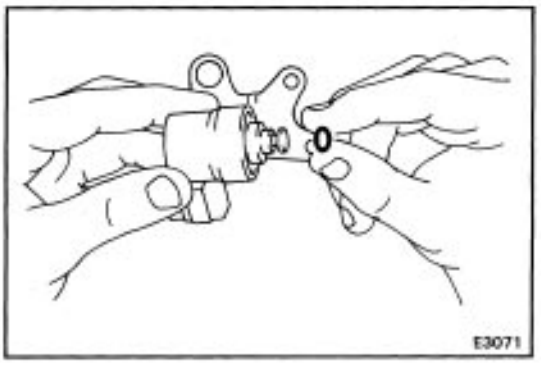

8. INSTALL SOLENOID

(a) Install a new O–ring on the solenoid.

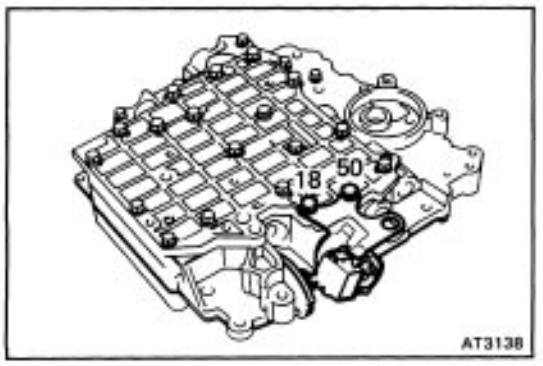

(b) Install the solenoid.

HINT: Each bolt length (mm) is indicated in the figure.

Torque: 65 kg–cm (56 in.–lb, 6.4 N–m)

Valve Body (A241H)

COMPONENTS

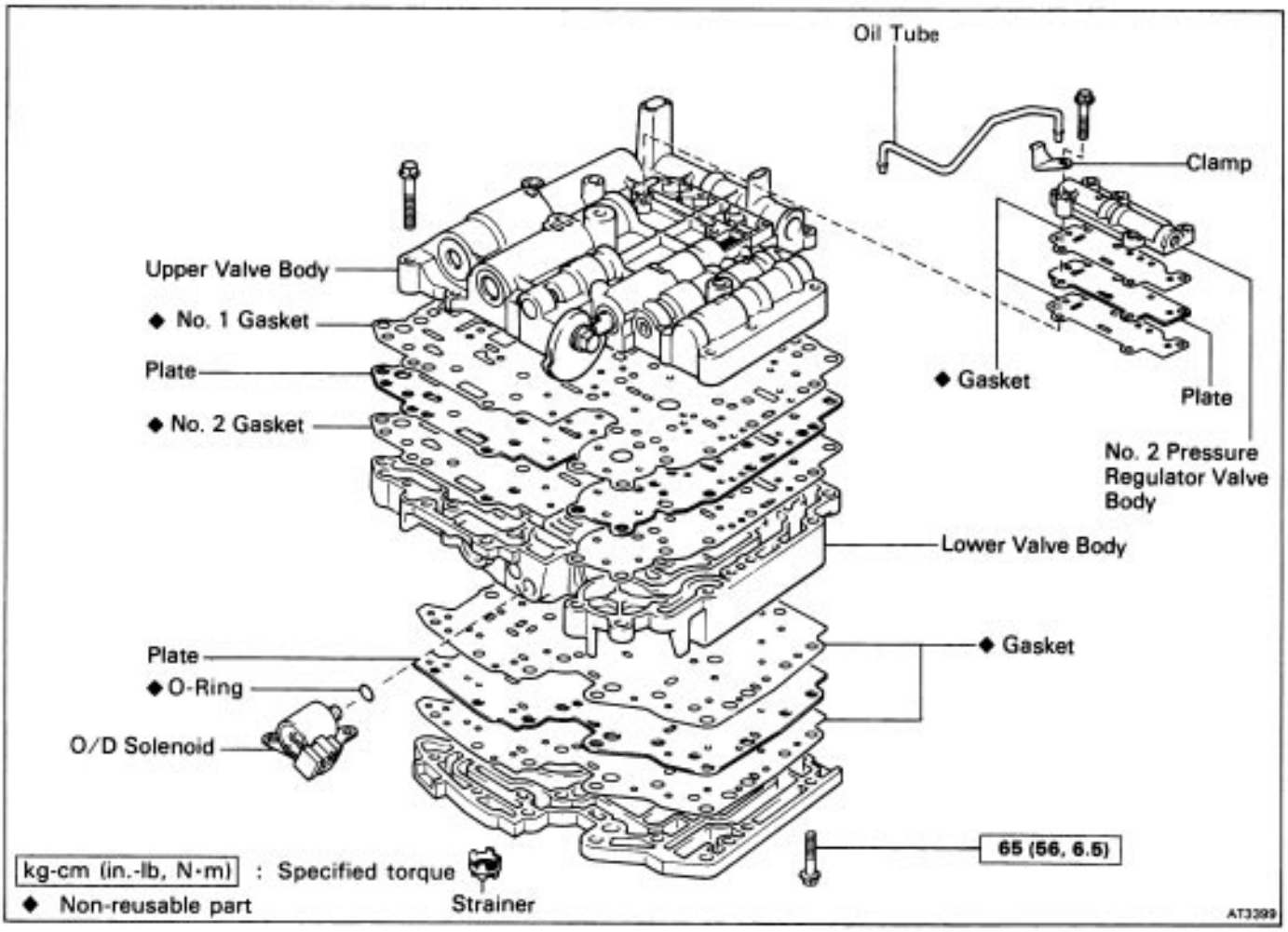

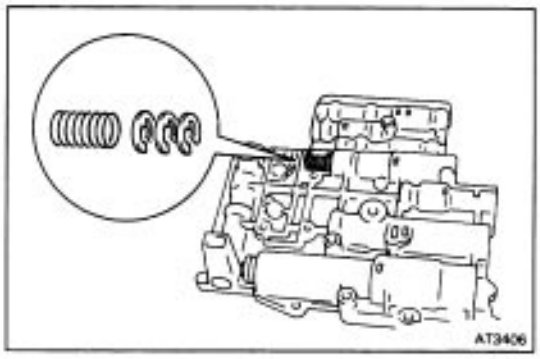

(Disassembly of Valve Body)

1. NOTE THE NUMBER OF ADJUSTING RINGS

HINT: Count the number of adjusting rings before disassembly of the valve body because the throttle pressure is changed according to the number. (Some of the valve bodies do not have any adjusting rings.)

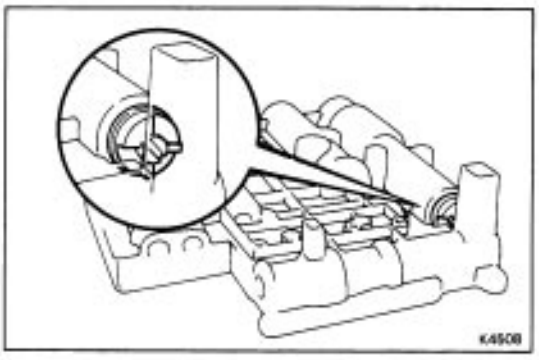

2. NOTE THE POSITION OF PLUNGER SLEEVE

Note which step at the end of the plunger sleeve is in contact with the valve body.

HINT: Be certain to check this before disassembly because the line pressure changes according to the part of the plunger sleeve which comes into contact with the valve body.

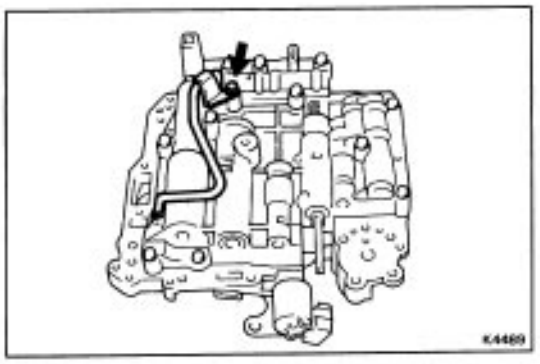

3. SEPARATE NO.2 PRESSURE REGULATOR VALVE BODY

(a) Remove the tube clamp and oil tube.

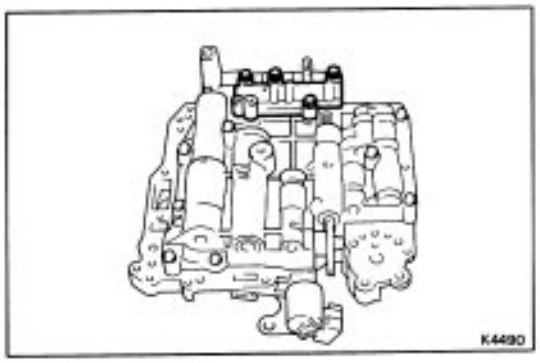

(b) Remove the four bolts, No.2 pressure regulator valve body, gasket and plate from the upper valve body.

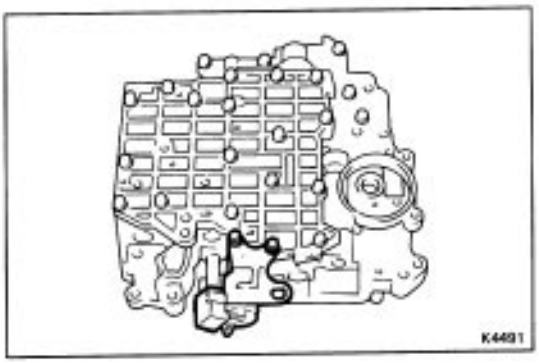

4. REMOVE O/D SOLENOID

(a) Remove the solenoid.

(b) Remove the O–ring from the solenoid.

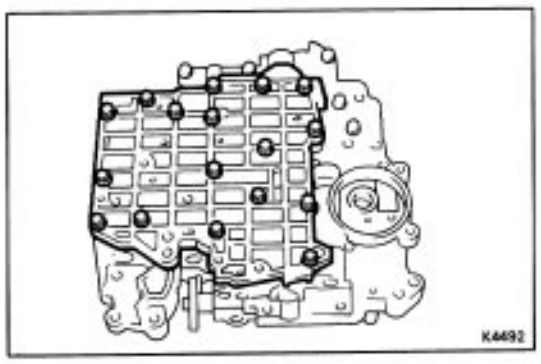

5. REMOVE LOWER VALVE BODY COVER AND OIL STRAINER

(a) Remove the seventeen bolts, cover, plate and two gaskets.

(b) Remove the oil strainer.

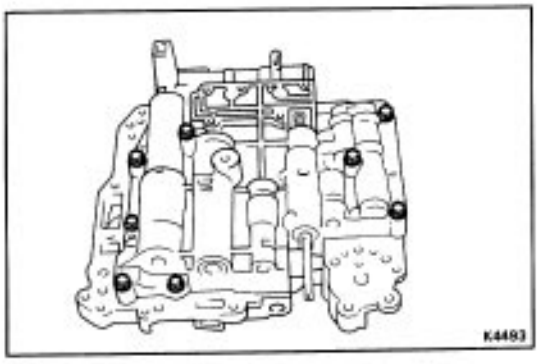

6. SEPARATE UPPER VALVE BODY AND LOWER VALVE BODY

(a) Remove the eight bolts from the upper valve body.

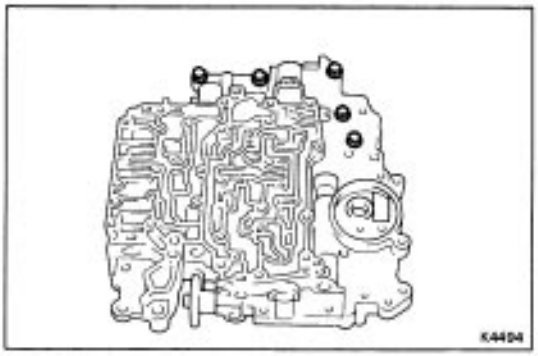

(b) Remove the five bolts from the lower valve body.

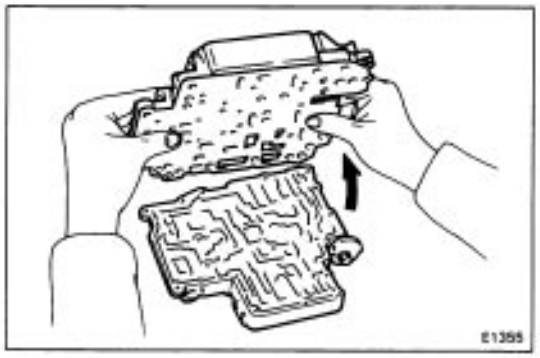

(c) Hold the plate to the lower valve body and lift off the lower valve body.

HINT: Be careful that the valves, springs and strainer do not fall out.

(Upper Valve body)

COMPONENTS

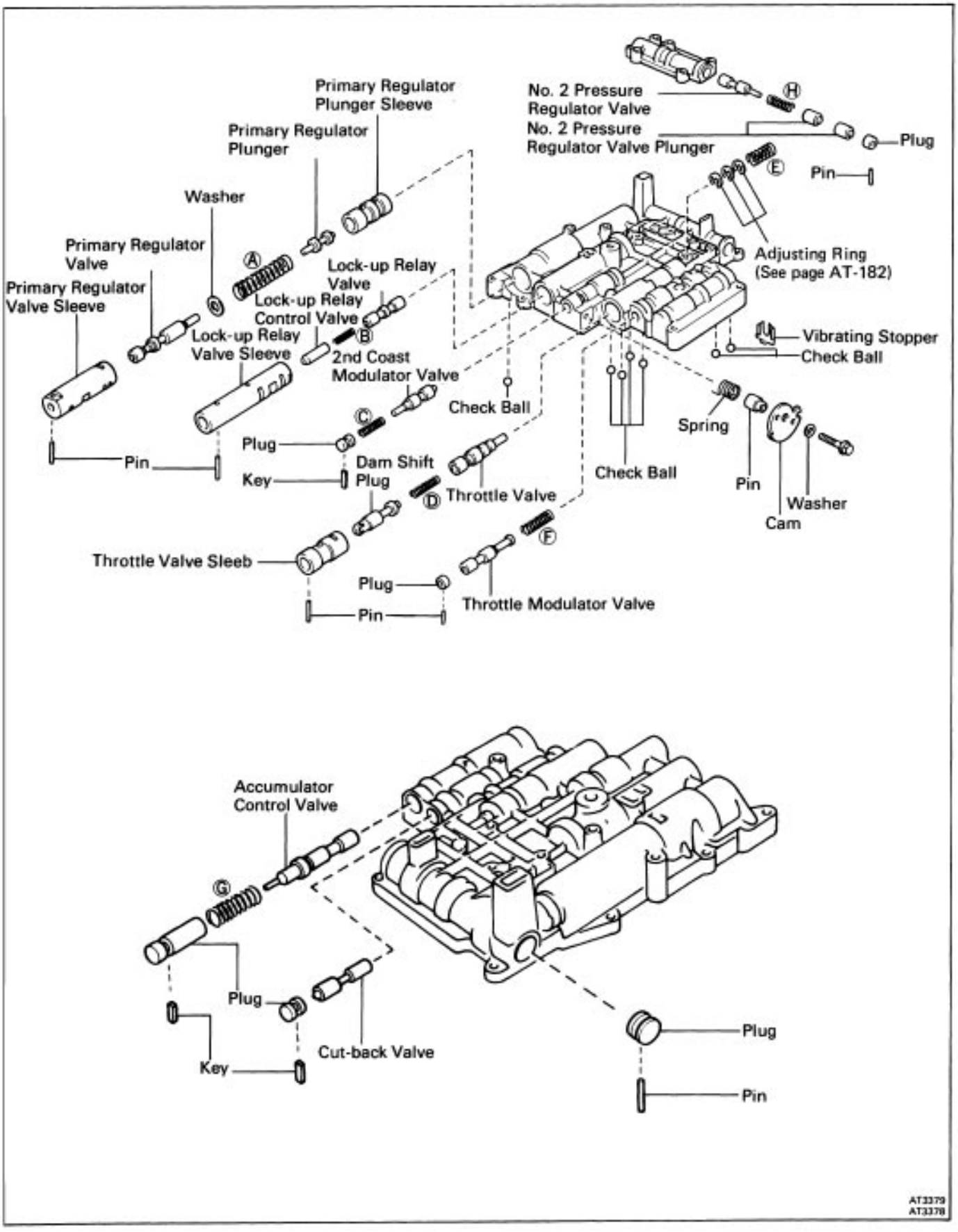

SPECIFICATIONS OF VALVE BODY SPRING

Spring		Free Length mm (in.)	Coil Outer Diameter mm (in.)	Number of Coils	Color
Ⓐ	Primary Regulator Valve Spring	66.7 (2.626)	18.6 (0.732)	12.5	Purple
Ⓑ	Lock–up Relay valve Spring	18.8 (0.740)	5.1 (0.201)	14.5	None
Ⓒ	2nd Coast Modulator Valve Spring	32.6 (1.283)	8.3 (0.327)	12.5	Blue
Ⓓ	Down Shift Plug Spring	29.3 (1.154)	8.7 (0.343)	12.0	Pink
Ⓔ	Throttle Valve Spring	29.2 (1.150)	9.2 (0.362)	9.5	Light Green
Ⓕ	Throttle Modulator Valve Spring	29.9 (1.177)	9.0 (0.354)	15.5	Green
Ⓖ	Accumulator Control Valve Spring	38.2 (1.504)	10.0 (0.394)	11.5	Yellow
Ⓗ	No.2 Pressure Regulator Valve Spring	29.4 (1.157)	7.5 (0.295)	12.0	Red

HINT: During re–assembly please refer to the spring specifications above to help discriminate between the different springs.

LOCATION OF KEYS PINS VIBRATING STOPPER AND CHECK BALLS

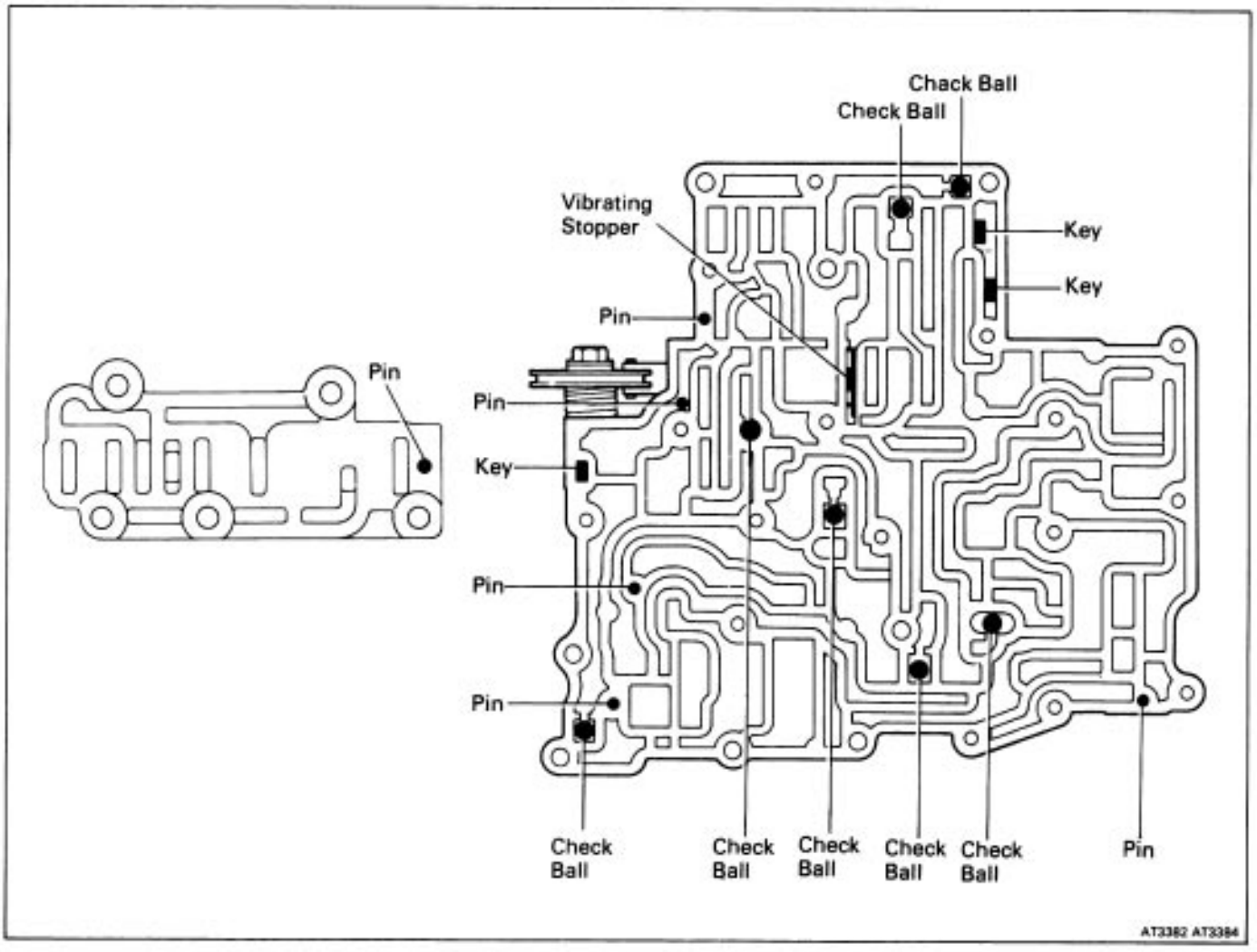

(Lower Valve Body)

COMPONENTS

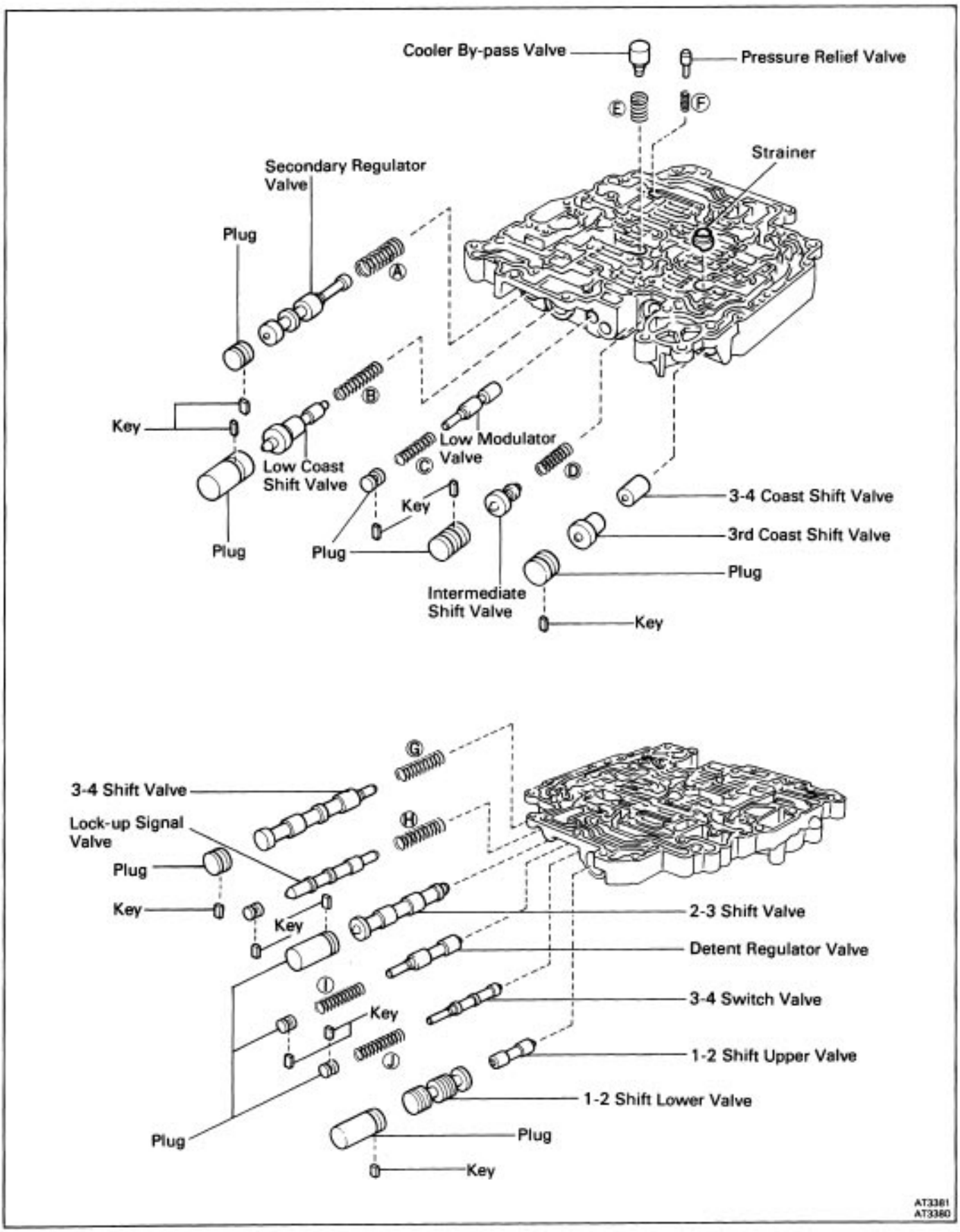

SPECIFICATIONS OF VALVE BODY SPRINGS

Spring		Free Length mm (in.)	Coil Outer Diameter mm (in.)	Number of Coils	Color
Ⓐ	Secondary Regulator Valve Spring	27.4 (1.079)	11.0 (0.433)	11.5	Blue
Ⓑ	1–2 Shift Valve Spring	27.2 (1.071)	6.4 (0.252)	15.5	Yellow
Ⓒ	Low Modulator Valve Spring	29.2 (1.150)	8.3 (0.327)	12.5	None
Ⓓ	2–3 Shift Valve Spring	27.7 (1.091)	8.3 (0.327)	11.0	None
Ⓔ	Cooler By–pass Valve Spring	18.3 (0.720)	12.0 (0.472)	6.5	Yellow
Ⓕ	Pressure Relief Valve Spring	11.2 (0.441)	6.4 (0.252)	7.5	None
Ⓖ	3–4 Shift Valve Spring	34.9 (1.374)	8.2 (0.323)	13.5	None
Ⓗ	Lock–up Signal Valve Spring	41.4 (1.630)	8.2 (0.323)	14.5	White
Ⓘ	Detent Regulator Valve Spring	32.0 (1.260)	8.3 (0.327)	15.5	Brown
Ⓙ	3–4 Switch Valve Spring	30.9 (1.217)	7.0 (0.276)	18.5	None

HINT: During re–assembly please refer to the spring specifications above to help discriminate between the different springs.

LOCATION OF KEYS STRAINER AND VALVES

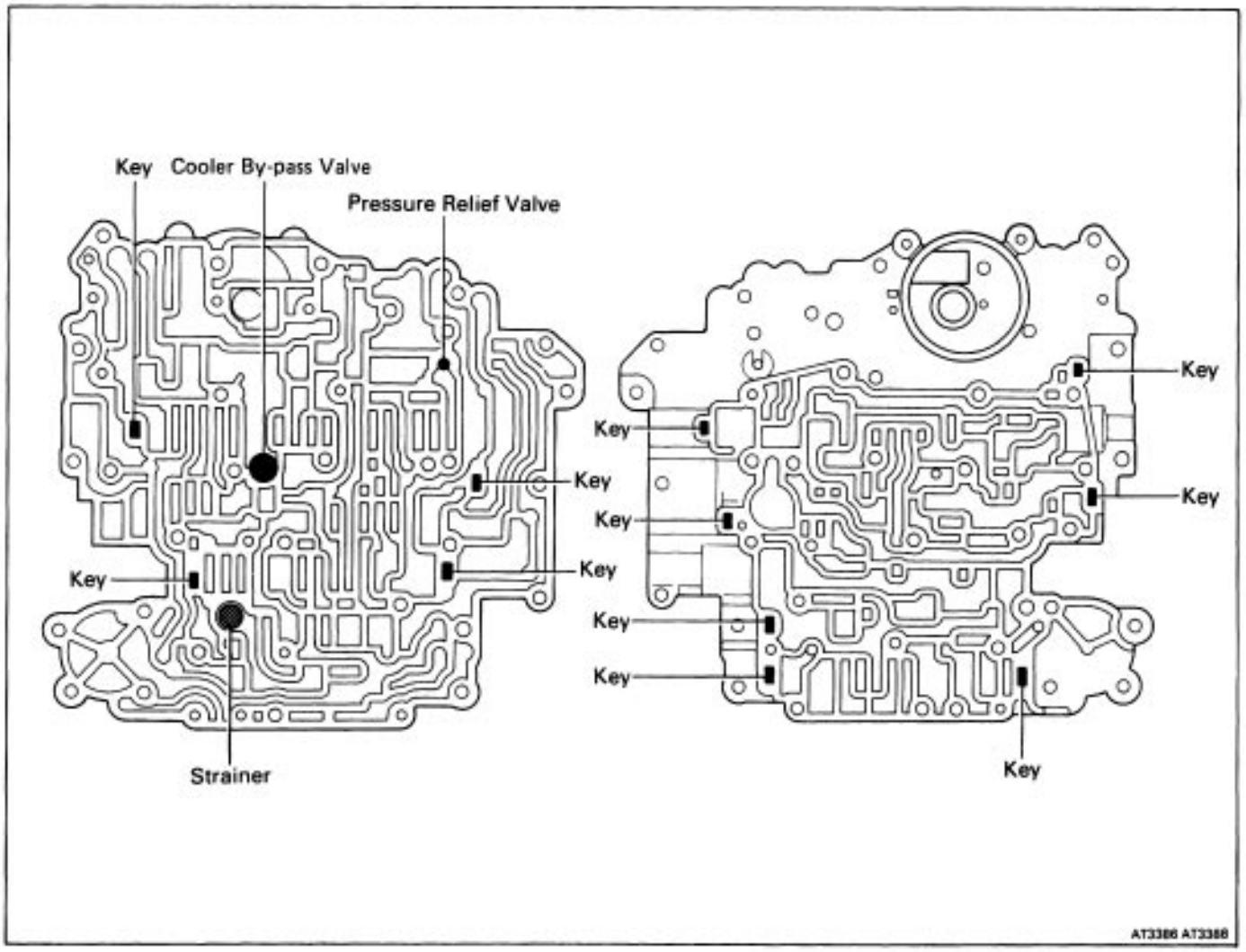

(Sectional View of Valve Body)

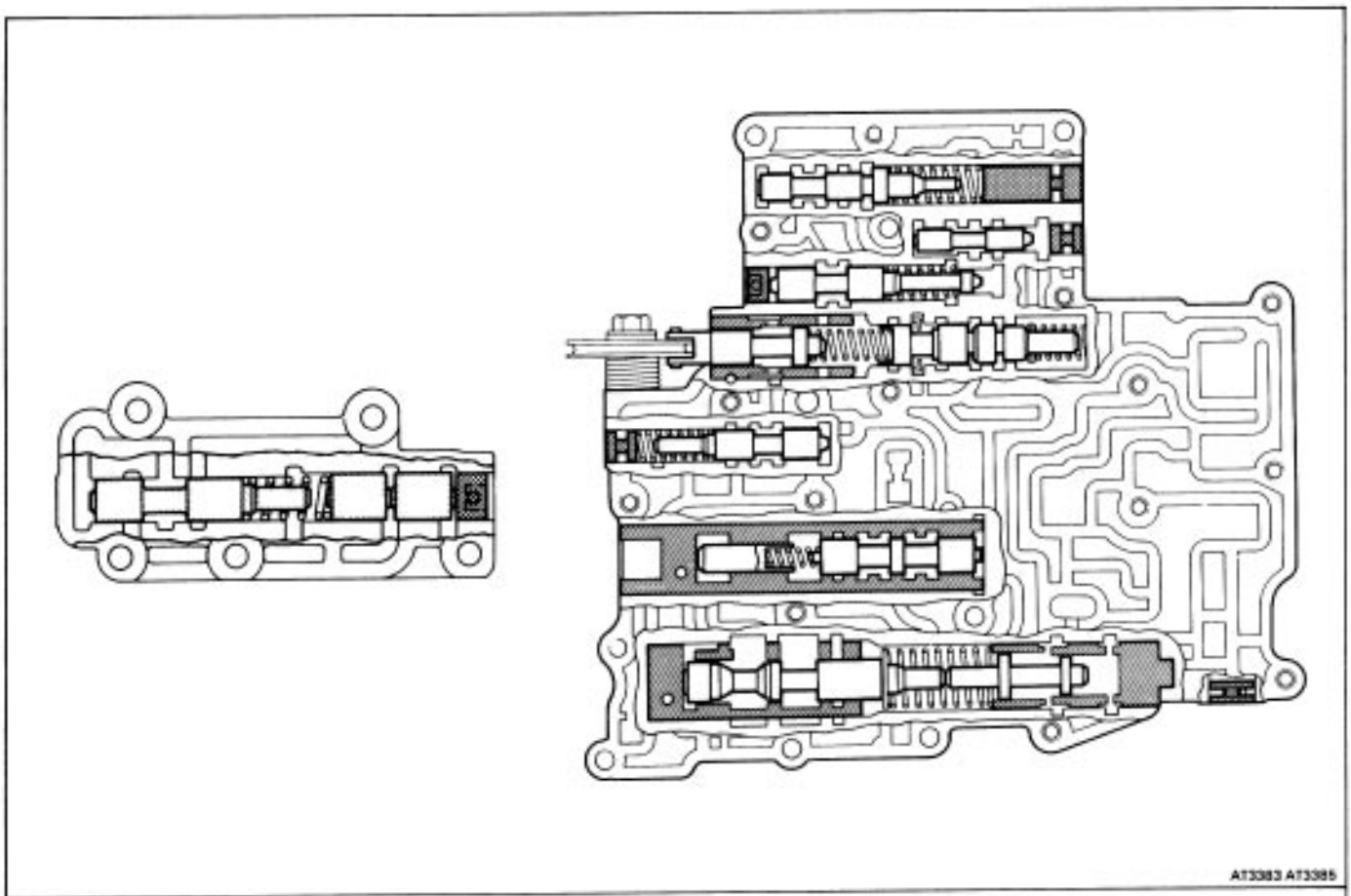

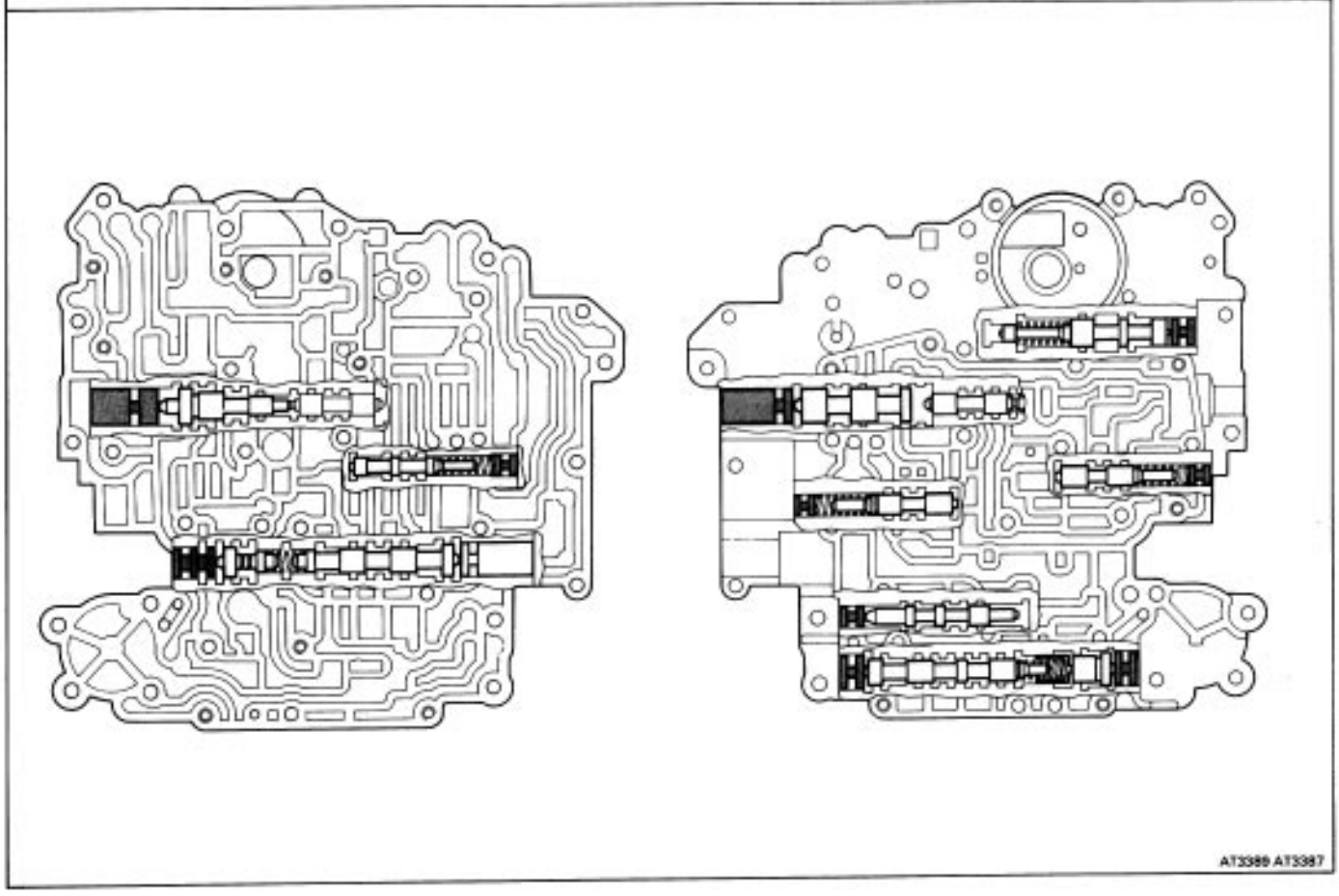

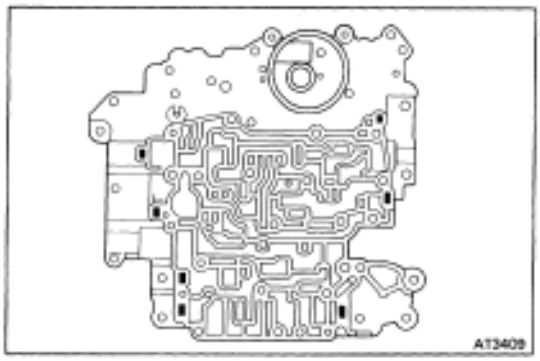

(Assembly of Valve Body)

1. CHECK INSTALLATION OF KEYS, PINS, CHECK BALLS, STOPPER AND STRAINER

(a) Make sure that the keys and strainer on the upper side of the lower valve body are installed correctly. (See page AT–188)

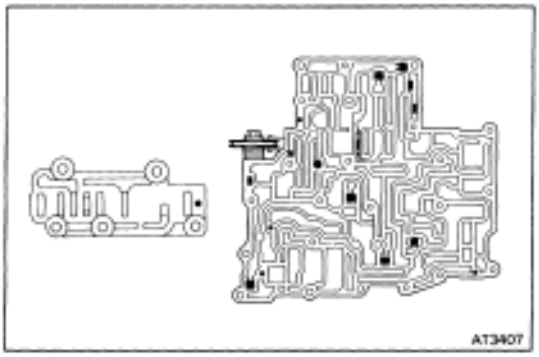

(b) Make sure that the keys, pins, check balls and vibrating stopper on the lower side of the upper valve body and No.2 pressure regulator valve body are installed correctly. (See page **AT–186**)

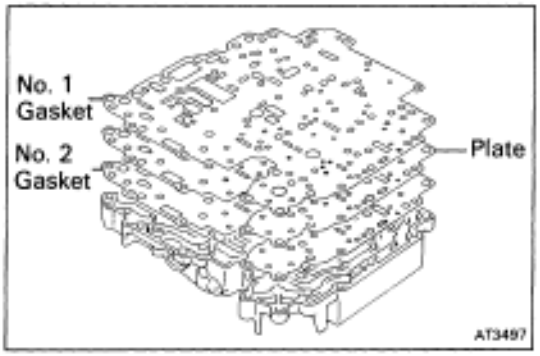

2. POSITION PLATE AND NEW GASKETS ON LOWER VALVE BODY

Position the new No.2 gasket, plate and then the new No. 1 gasket on the lower valve body.

HINT: Since the No. 1 gasket and No.2 gasket are similar use the illustration below to discriminate between them.

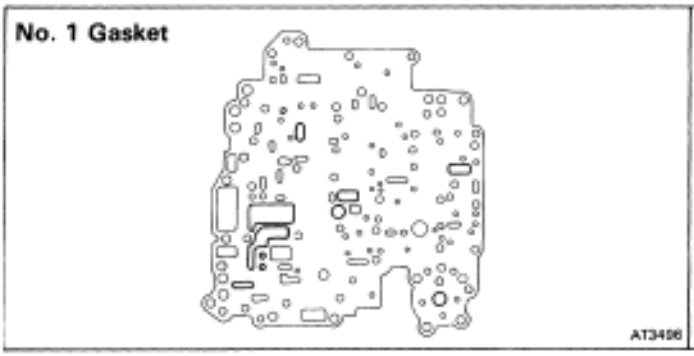

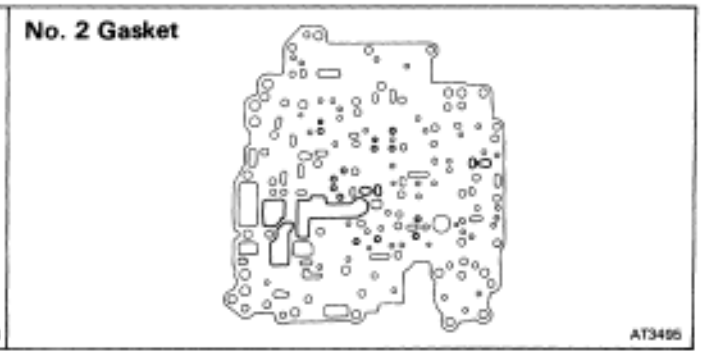

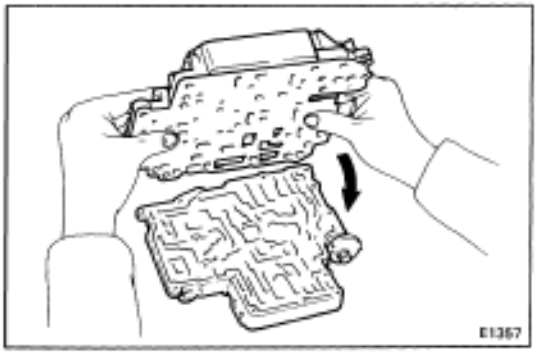

3. PLACE LOWER VALVE BODY WITH PLATE AND GASKETS ON UPPER VALVE BODY

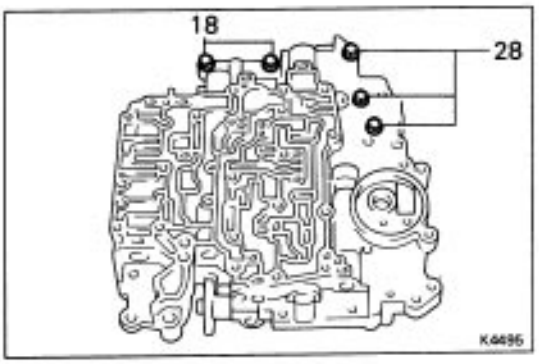

4. INSTALL AND FINGER TIGHTEN BOLTS IN LOWER VALVE BODY TO SECURE UPPER VALVE BODY

Install and finger tighten the five bolts.

HINT: Each bolt length (mm) is indicated in the figure.

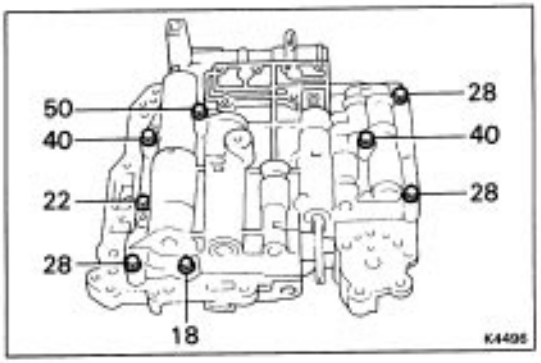

5. INSTALL AND FINGER TIGHTEN BOLTS IN UPPER VALVE BODY

Install and finger tighten the eight bolts.

HINT: Each bolt length (mm) is indicated in the figure.

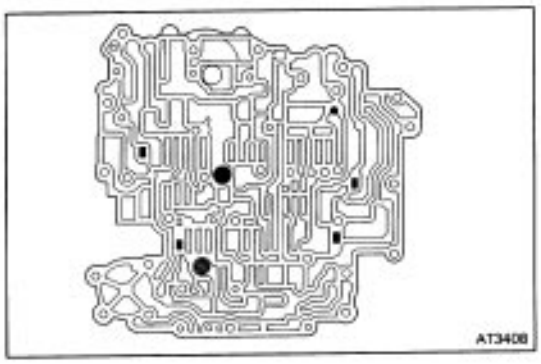

6. INSTALL LOWER VALVE BODY COVER

(a) Make sure that the keys are installed correctly. (See page AT–188)

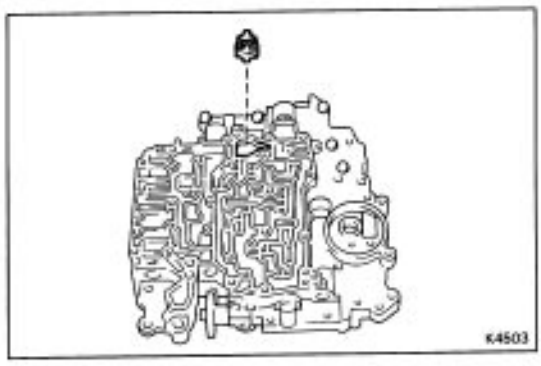

(b) Install the strainer.

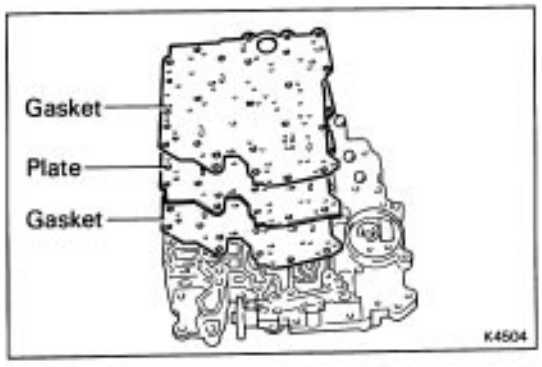

(c) Position a new gasket and plate and then another new gasket.

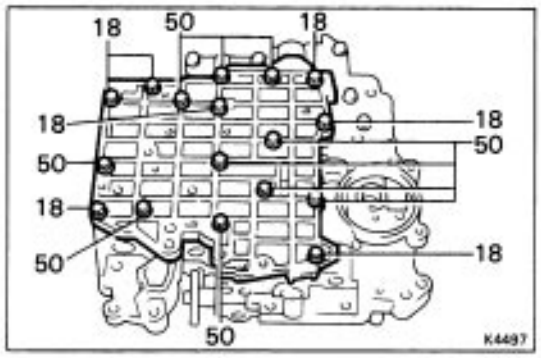

(d) Position the lower valve body cover.
(e) Install and finger tighten the seventeen bolts.
HINT: Each bolt length (mm) is indicated in the figure.

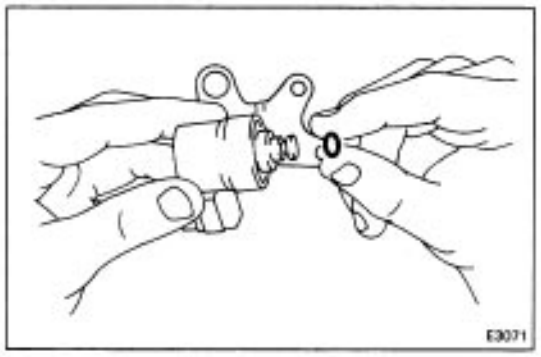

7. INSTALL O/D SOLENOID

(a) Apply ATF to a new O–ring.
(b) Install the O–ring to the solenoid.

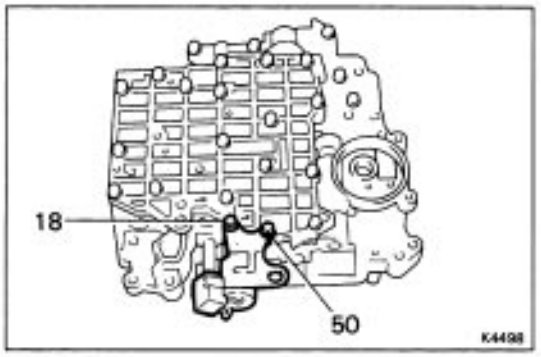

(c) Install the solenoid.
HINT: Each bolt length (mm) is indicated in the figure.
Torque: 65 kg–cm (56 in.–lb, 6.4 N–m)

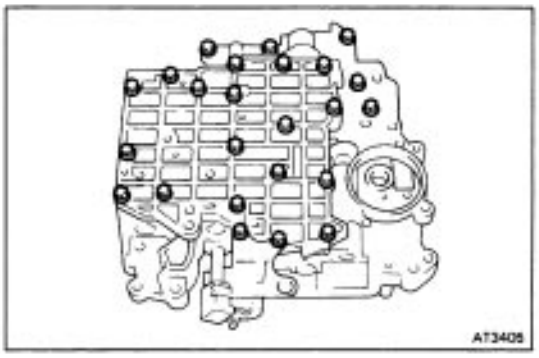

8. TIGHTEN EACH BOLTS

Torque: 65 kg–cm (56 in.–lb, 6.4 N–m)
(Lower valve body side)

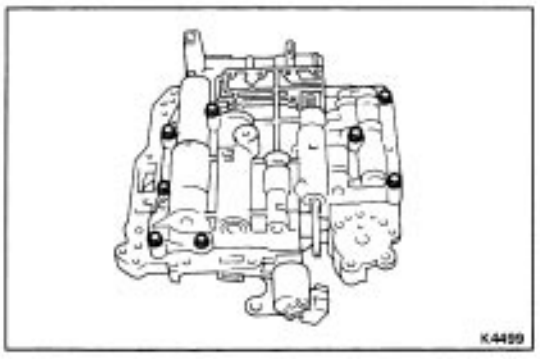

(Upper valve body side)

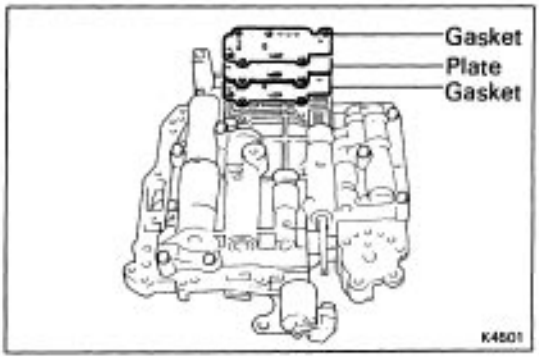

9. INSTALL NO.2 PRESSURE REGULATOR VALVE BODY

(a) Install the gasket, plate and gasket on the upper valve body.

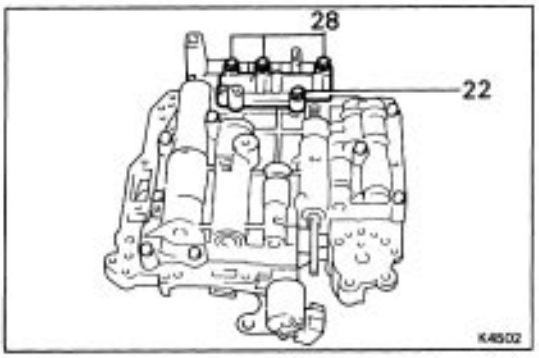

(b) Install the No.2 pressure regulator valve body on the upper valve body.

(c) Install and tighten the four bolts.

HINT: Each bolt length (mm) is indicated in the figure.

Torque: 65 kg–cm (56 in.–lb, 6.4 N–m)

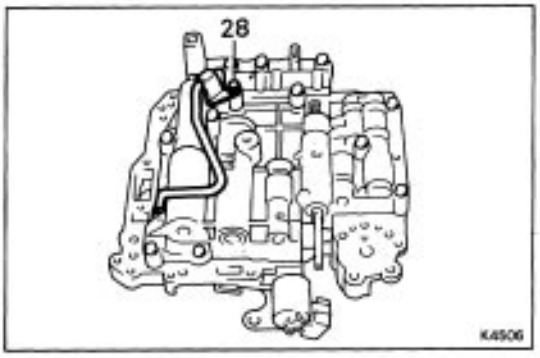

10. INSTALL OIL TUBE

(a) Install the oil tube.

(b) Install the clamp and torque the bolt.

Torque: 65 kg–cm (56 in.–lb, 6.4 N–m)

Differential and Drive Pinion (A131L)

COMPONENTS

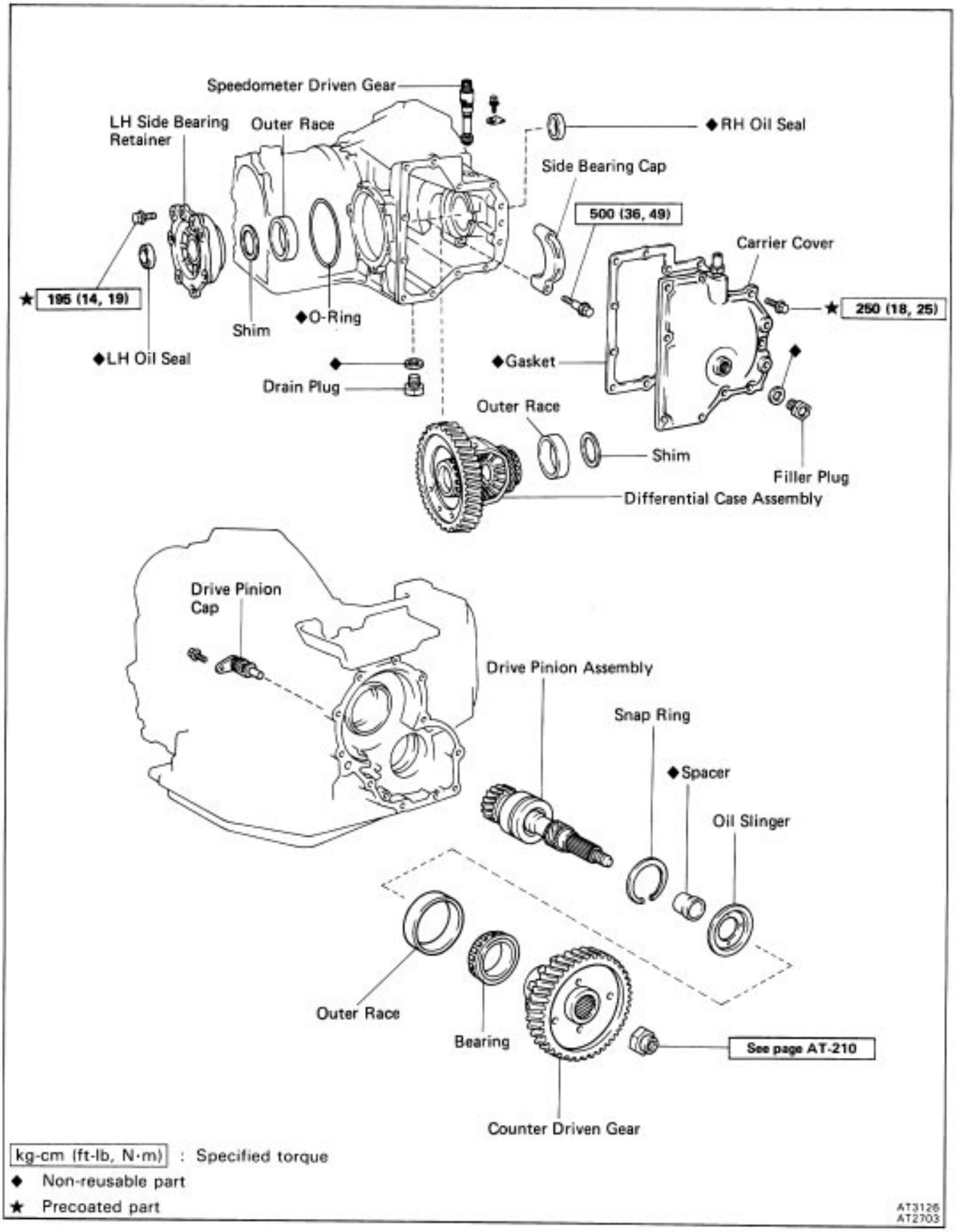

COMPONENTS (Cont'd)

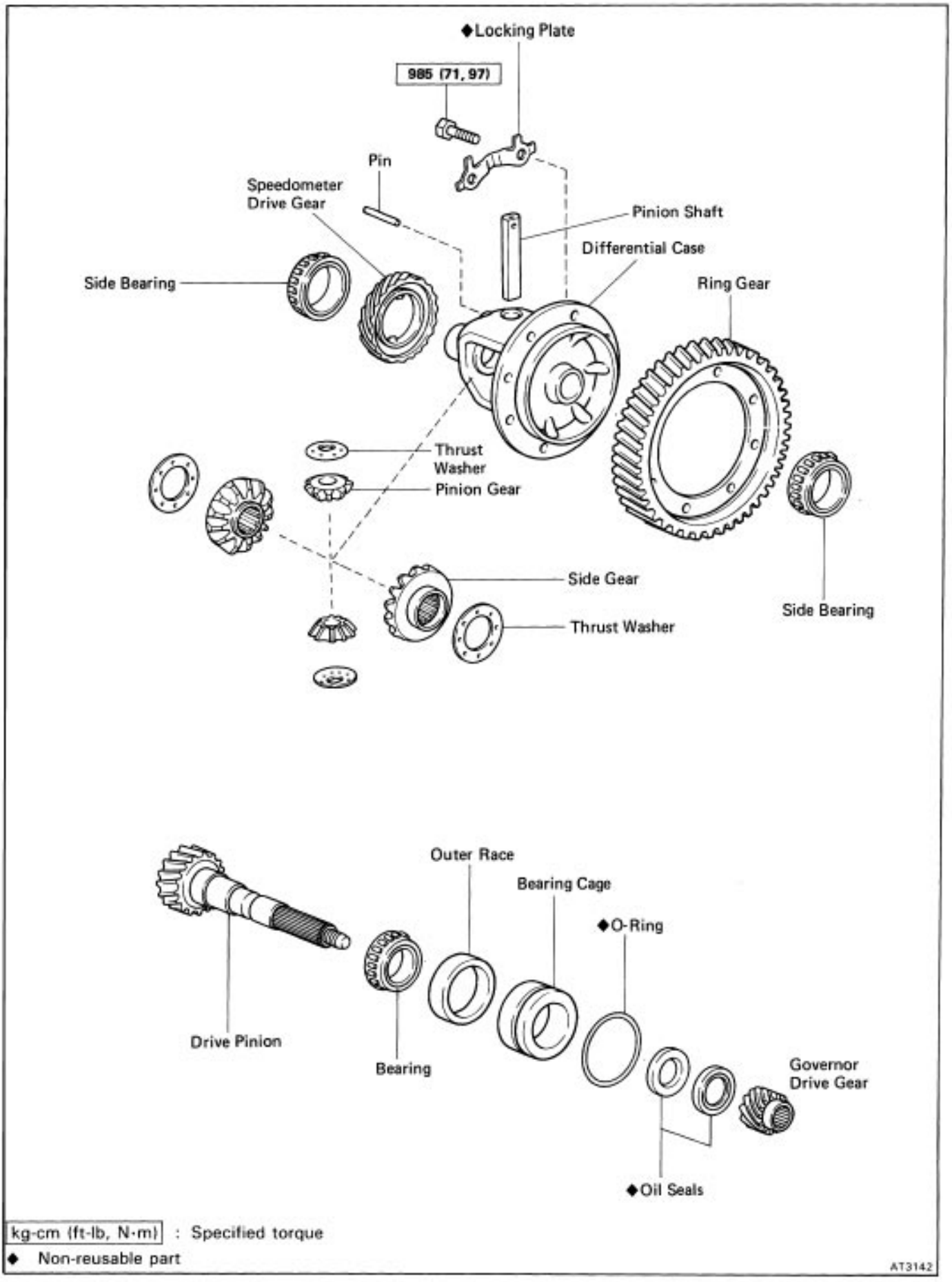

DISASSEMBLY OF DIFFERENTIAL

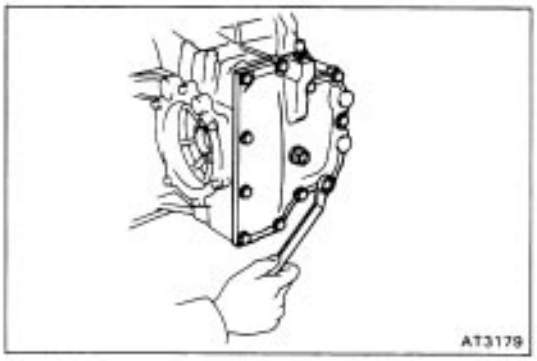

1. REMOVE CARRIER COVER

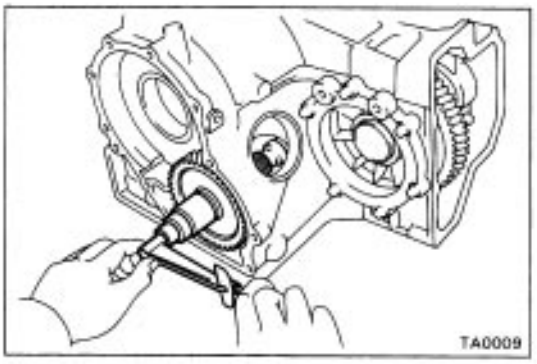

2. MEASURE TOTAL PRELOAD

Using a torque meter, measure the total preload, and make a note of it.

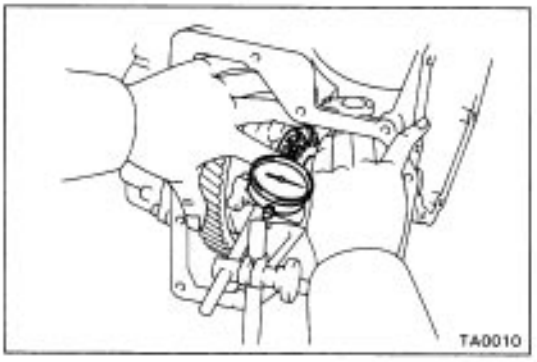

3. MEASURE BACKLASH OF SIDE GEAR

Measure each side gear backlash while holding one pinion toward the case.

Standard backlash:

0.05 – 0.20 mm (0.0020 – 0.0079 in.)

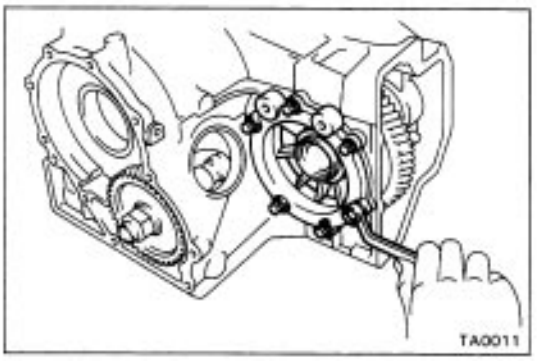

4. REMOVE LH BEARING RETAINER

(a) Remove the six bolts or five bolts.
(b) Tap the retainer with a plastic hammer to remove it.
(c) Remove the O–ring from the retainer.

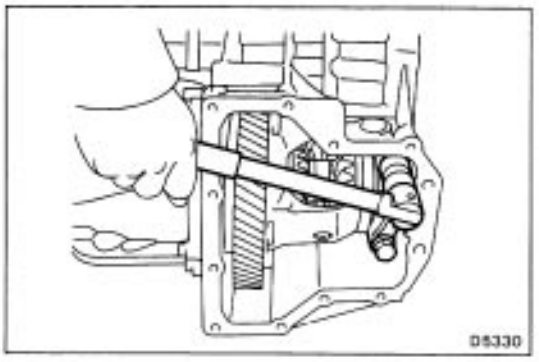

5. REMOVE DIFFERENTIAL CASE

(a) Remove the two bolts and side bearing cap.

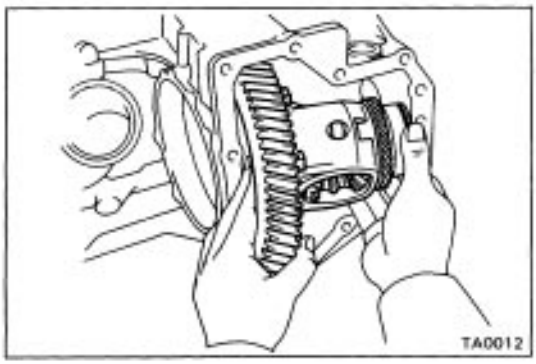

(b) Remove the differential case, outer race and adjusting shim from the case.

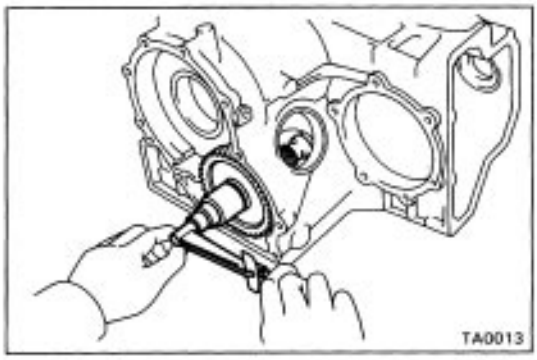

6. MEASURE DRIVE PINION PRELOAD

Using a torque meter, measure the drive pinion preload.

Preload (at starting): Reused bearing

5 – 8 kg–cm (4.3 – 6.9 in.–lb, 0.5 – 0.8 N–m)

The total preload measured in step 2, minus the drive pinion preload, equals 1. 5 – 2.0 kg–cm (1. 3 – 1.7 in. –lb, 0.1 – 0.2 N–m). If the result is not within this specification, the side bearing preload is wrong.

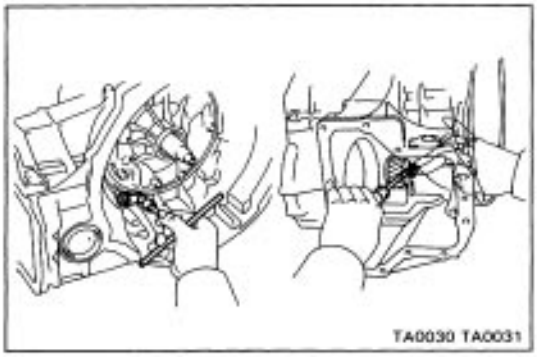

7. REMOVE DRIVE PINION CAP

Remove the bolt and pull out the drive pinion cap.

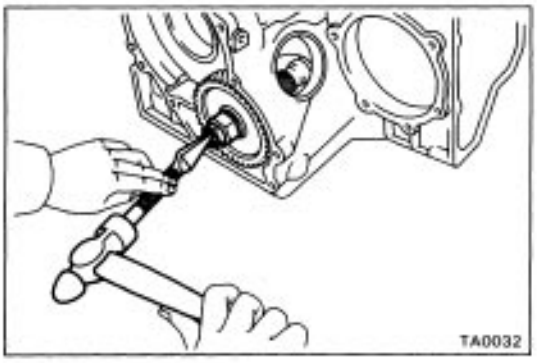

8. REMOVE COUNTER DRIVEN GEAR

(a) Using a chisel, loosen the staked part of the nut.

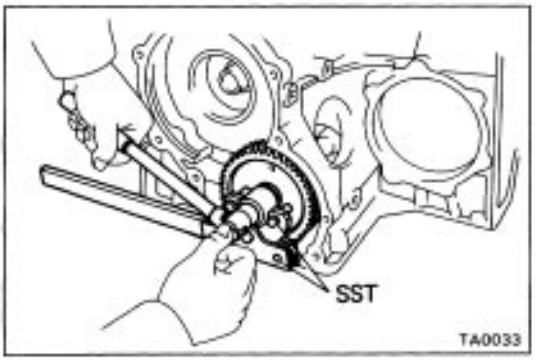

(b) Using SST to hold the gear, remove the nut.

SST 09330–00021, 09350–32014 (09351–32032)

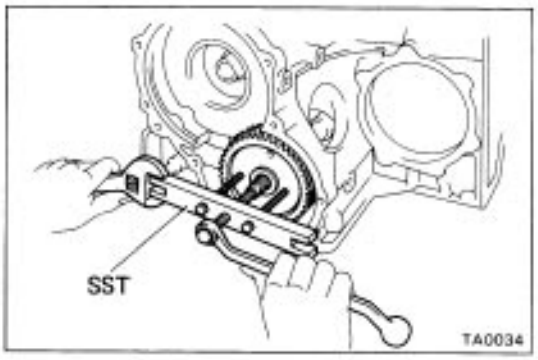

(c) Using SST, remove the gear and bearing.
SST 09350–32014 (09351–32061)

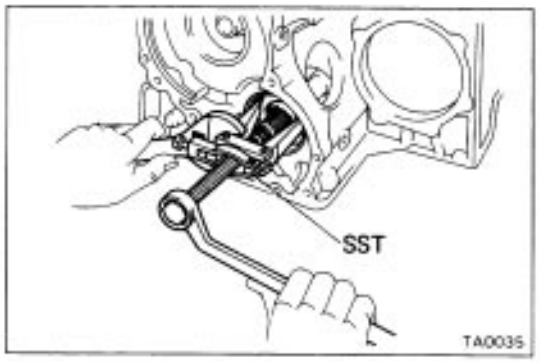

9. REMOVE OUTER RACE, OIL SLINGER AND SPACER

(a) Using SST, remove the outer race.
SST 09350–32014 (09308–10010)

(b) Remove the oil slinger and spacer.

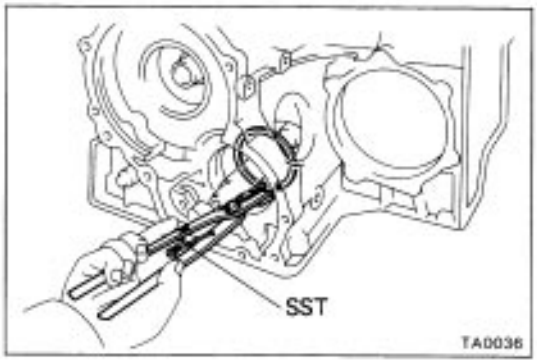

10. REMOVE DRIVE PINION

(a) Using SST, remove the snap ring.
SST 09350–32014 (09351–32050)



(b) Insert the brass bar into the case hole to tap out the drive pinion.

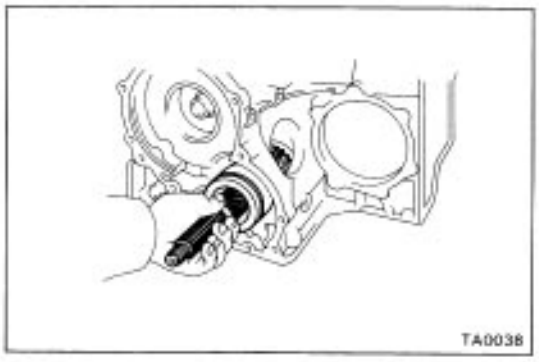

(c) Remove the drive pinion.

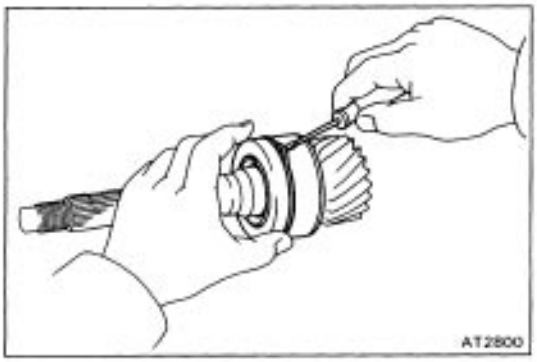

(d) Remove the O–ring from the cage.

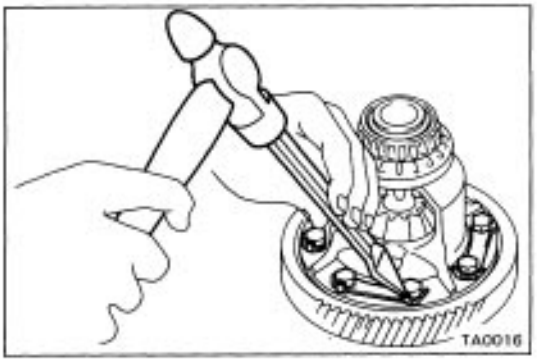

DISASSEMBLY OF DIFFERENTIAL CASE

1. REMOVE RING GEAR

(a) Loosen the staked part of the lock plate.

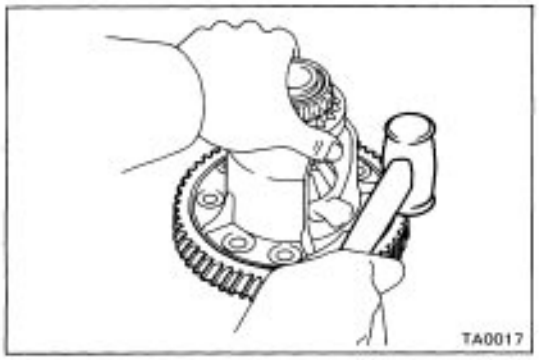

(b) Remove the eight bolts and locking plates.

(c) Using a copper hammer, tap on the ring gear to remove it from the case.

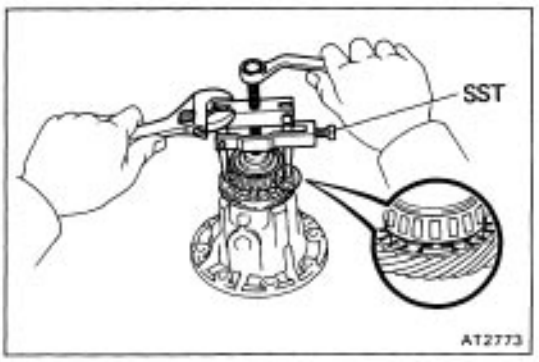

2. REMOVE SIDE BEARINGS

Fasten SST under the bearing above the cut–outs on the speedometer drive gear. Remove the bearing from the case.
SST 09502–10012

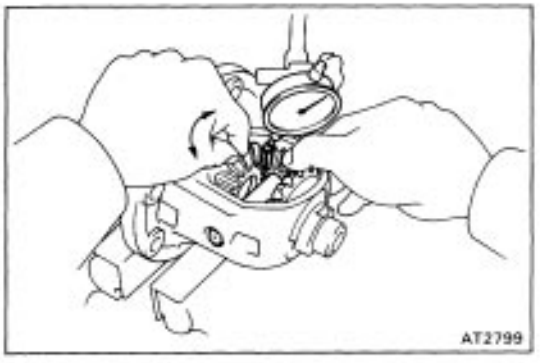

3. CHECK SIDE GEAR BACKLASH

Using a dial gauge, measure the backlash of one side gear while holding one pinion toward the case.

Standard backlash:

0.05 – 0.20 mm (0.0020 – 0.0079 in.)

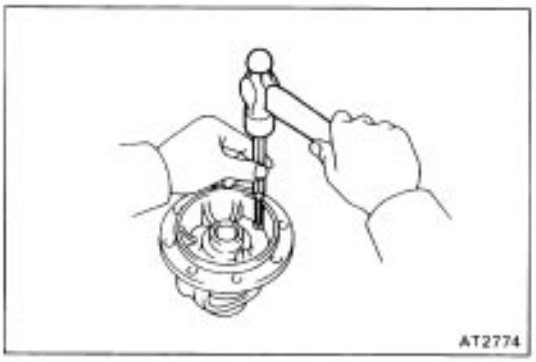

4. DISASSEMBLE DIFFERENTIAL CASE

(a) Drive out the pinion shaft lock pin from the side on which the ring gear is installed.

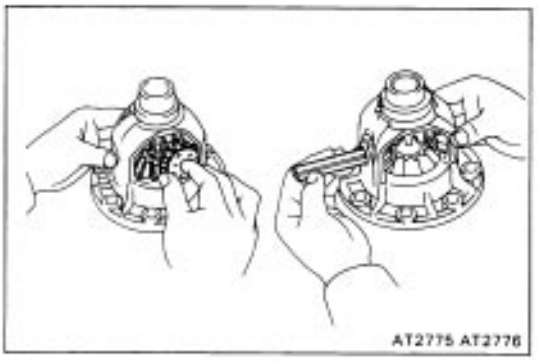

(b) Remove the pinion shaft from the case.
(c) Remove the two pinions and two side gears with the four thrust washers.



5. REMOVE LH OIL SEAL

Using a hammer and screwdriver, remove the oil seal.

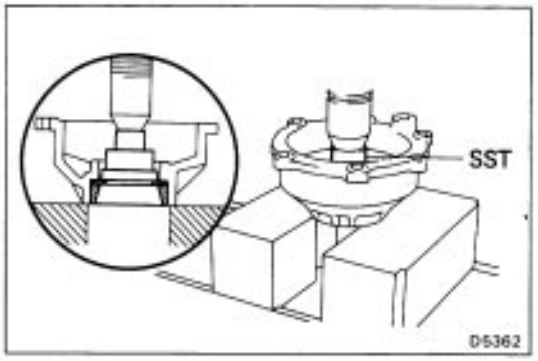

6. REMOVE BEARING OUTER RACE FROM LH SIDE BEARING RETAINER

Using SST, press out the outer race and shim.
SST 09350–32014 (09351–32090)

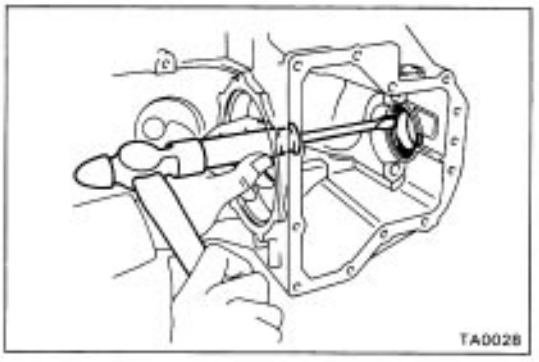

7. REMOVE RH OIL SEAL

Using a hammer and screwdriver, remove the oil seal.

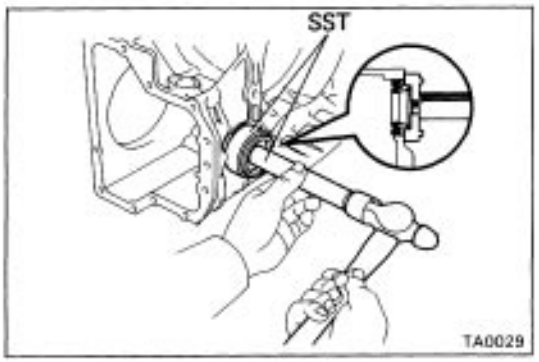

ASSEMBLY OF DIFFERENTIAL CASE

1. INSTALL RH OIL SEAL

(a) Using SST, drive in a new oil seal until its surface is flush with the surface of the case.
SST 09350–32014 (09351–32130, 09351–32150)

(b) Coat the oil seal lip with MP grease.

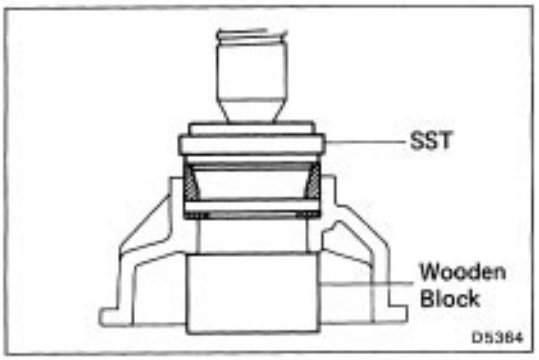

2. INSTALL BEARING OUTER RACE TO LH SIDE BEARING RETAINER

(a) Place the shim onto the retainer.
HINT: Use either the shim which was removed or one 2.10 mm (0.0827 in.) thick.

(b) Using SST, press a new outer race into the retainer.
SST 09350–32014 (09351–32111)

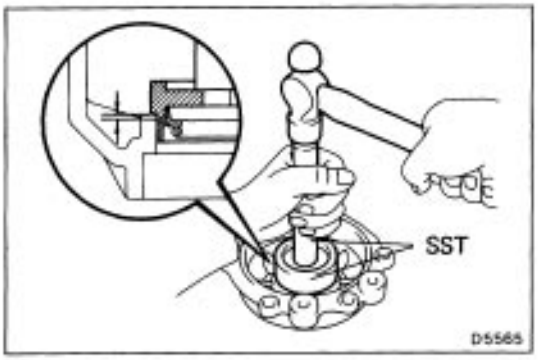

3. INSTALL LH OIL SEAL

(a) Using SST, drive in a new oil seal.
SST 09350–32014 (09351–32130, 09351–32150)
Oil seal drive in depth: 0 mm (0 in.)

(b) Coat the oil seal lip with MP grease.

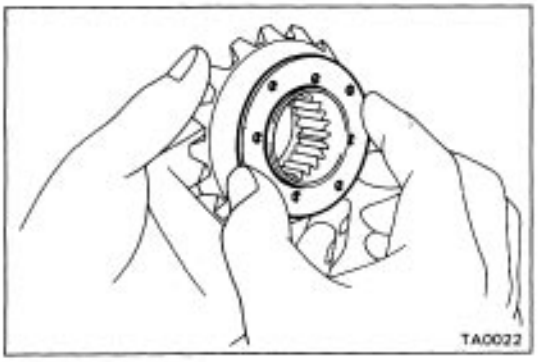

4. ASSEMBLE DIFFERENTIAL CASE

(a) Install the removed thrust washers to the side gears.

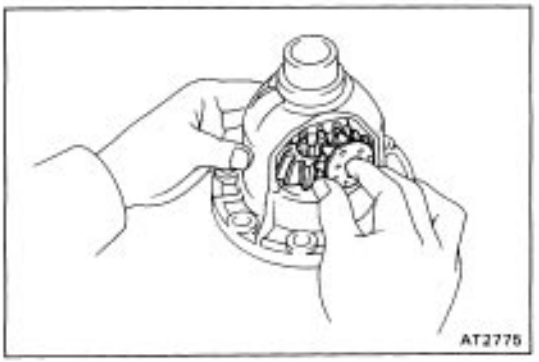

(b) Install the side gears with thrust washers, pinion thrust washers and pinion gears.

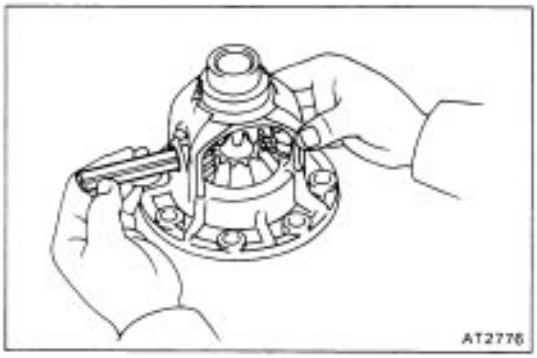

(c) Install the pinion shaft.

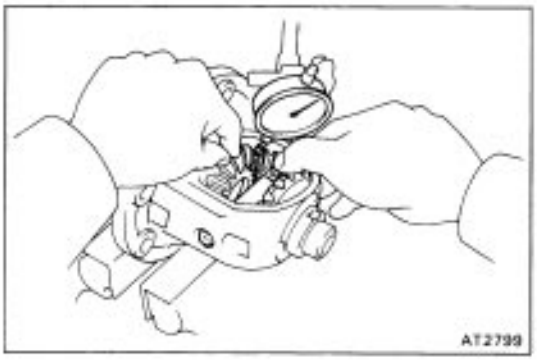

(d) Check the side gear backlash.
Measure the side gear backlash while holding one pinion gear toward the case.

Standard backlash: 0.05 – 0.20 mm (0.0020 – 0.0079 in.)

Referring to the table below, select thrust washers which will ensure that the backlash is within specification. Try to select washers of the same size for both sides.

Thrust washer thickness

mm (in.)

0.95 (0.0374)	1.10 (0.0433)
1.00 (0.0394)	1.15 (0.0453)
1.05 (0.0413)	1.20 (0.0472)

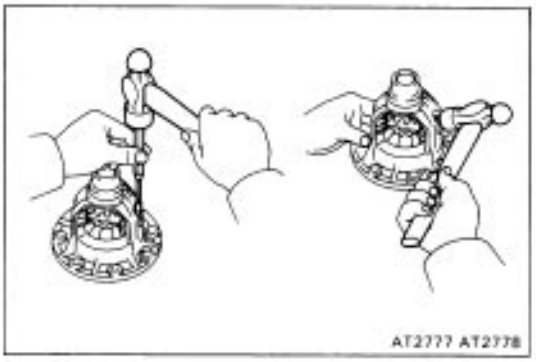

If the backlash is not within specification, install a thrust washer of a different thickness.

(e) Using a hammer and punch, drive the lock pin through the case and hole in the pinion shaft.

(f) Stake the differential case.

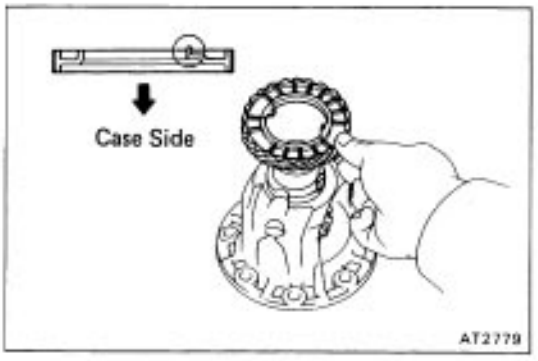

5. INSTALL SIDE BEARINGS

(a) Install the speedometer drive gear onto the differential case.

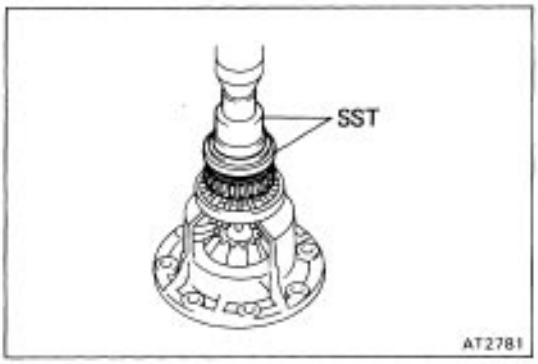

(b) Using SST and a press, press each side bearing onto the differential case.
SST 09350–32014 (09351–32090, 09351–32120)

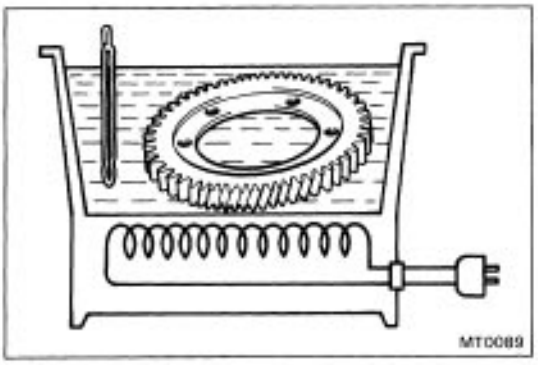

6. INSTALL RING GEAR

(a) Clean the contact surface of the differential case.
(b) Heat the ring gear to about 100˚ C (212˚ F) in an oil bath
NOTICE: Do not heat the ring gear above 110˚C (230˚F).
(c) Clean the contact surface of the ring gear with cleaning solvent.

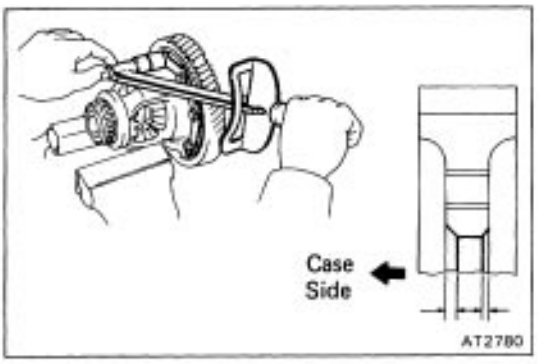

(d) Quickly install the ring gear on the differential case.
(e) Install a new locking plates and set bolts. Tighten the set bolts uniformly and a little at a time. Torque the bolts.
Torque: 985 kg–cm (71 ft–lb, 97 N –m)

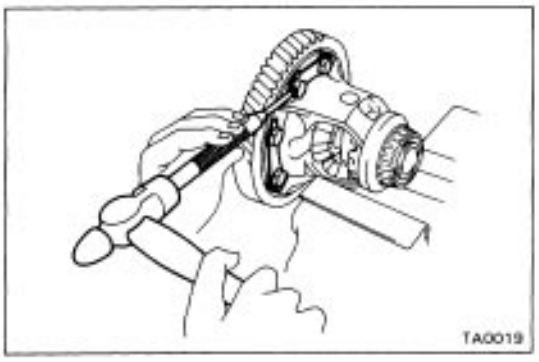

(f) Using a hammer and drift punch, stake the locking plates.
HINT: Stake one claw flush with the flat surface of the nut. For the claw contacting the protruding portion of the nut, stake only the half on the tightening side.

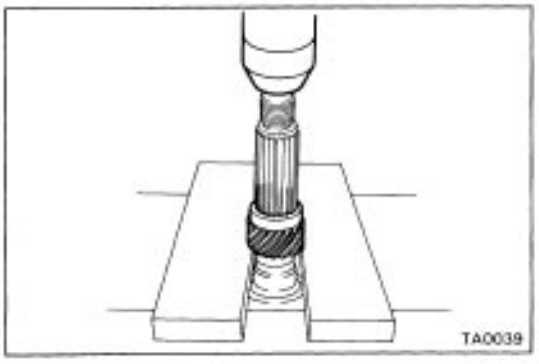

DISASSEMBLY OF DRIVE PINION

1. REMOVE GOVERNOR DRIVE GEAR

Using a shop press, press out the rotor sensor or governor drive gear.

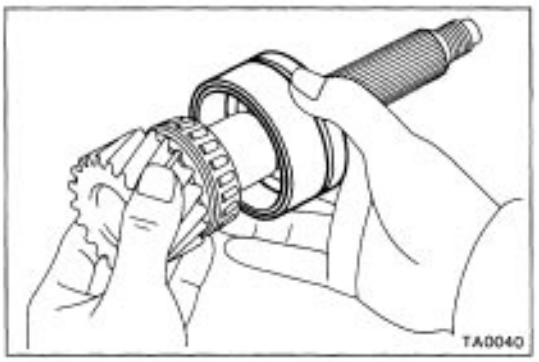

2. REMOVE BEARING CAGE FROM DRIVE PINION

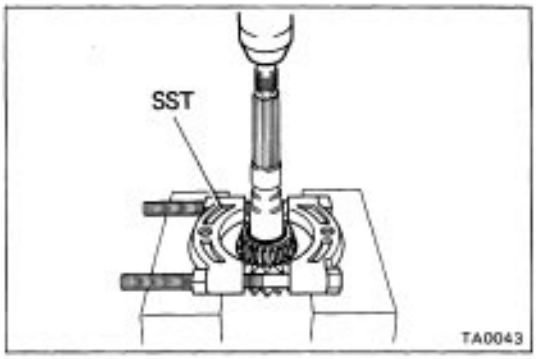

3. REMOVE DRIVE PINION SHAFT BEARING

Using SST, press out the bearing.
SST 09950–00020

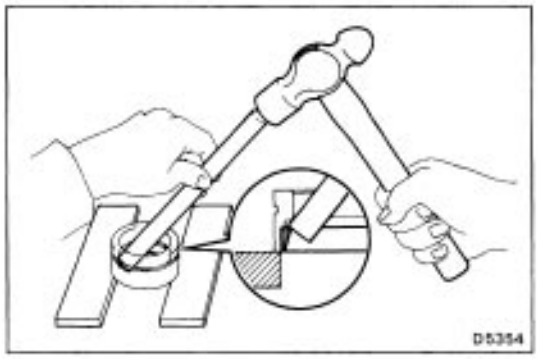

4. REMOVE SHAFT BEARING OUTER RACE FROM CAGE

Using a hammer and brass bar, drive out the outer race from the cage.

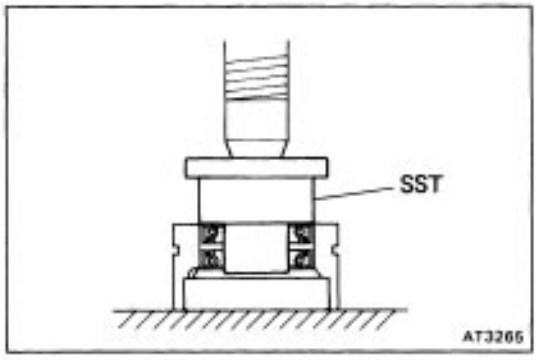

5. REMOVE OIL SEALS FROM CAGE

Using SST, press out the two oil seals together.
SST 09350–32014 (09351–32090)

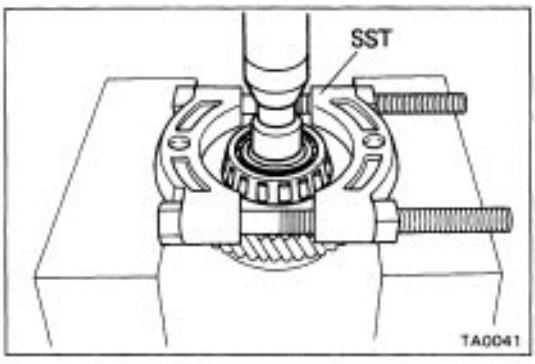

6. REMOVE COUNTER DRIVEN GEAR BEARING

Using SST, press out the bearing.
SST 09950–00020

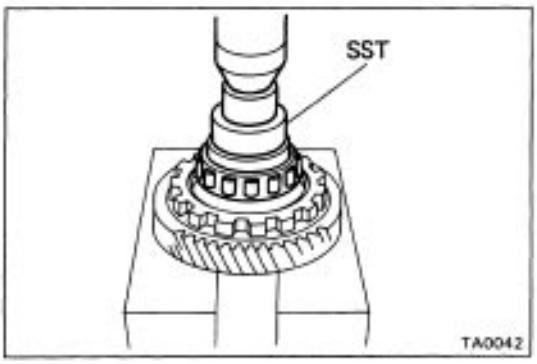

ASSEMBLY OF DRIVE PINION SHAFT COMPONENTS

1. INSTALL COUNTER DRIVEN GEAR BEARING

Using SST, press in a new bearing.
SST 09350–32014 (09351–32090)

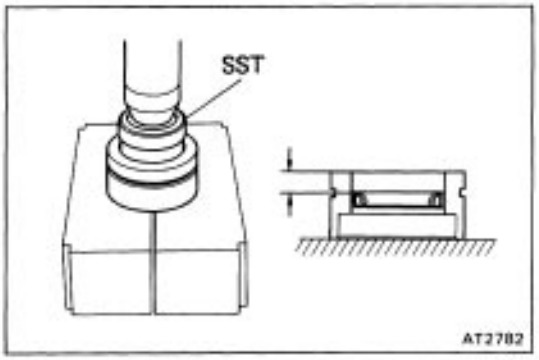

2. INSTALL OIL SEALS TO CAGE

(a) Using SST, press in a new oil seal with the lip facing downward.
SST 09350–32014 (09351–32090)

Oil seal press in depth (from flat end):
AISIN A.W. Type 9.5 mm (0.374 in.)
TOYOTA Type 10.0 mm (0.394 in.)

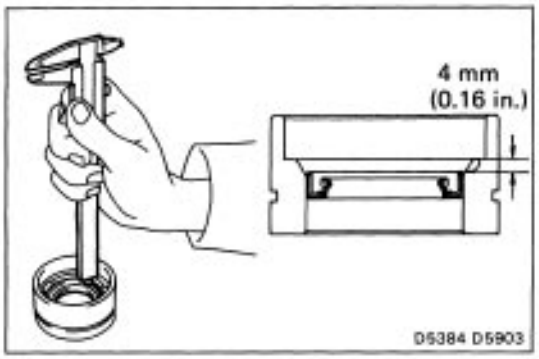

(b) Measure the oil seal press in depth.
Oil seal press in depth: 4mm (0.16 in.)

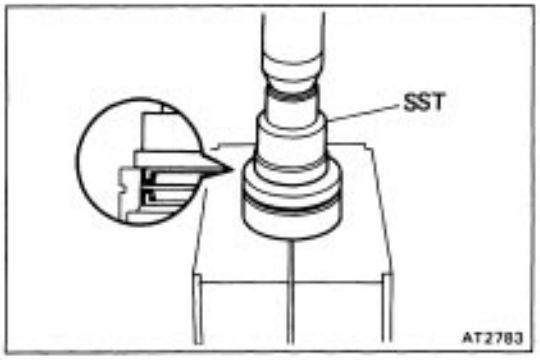

(c) With the oil seal lip facing upward, use SST to press in a new oil seal until its end is flush with the surface of the cage.
SST 09350–32014 (09351–32090)

(d) Coat the oil seal lip with MP grease.

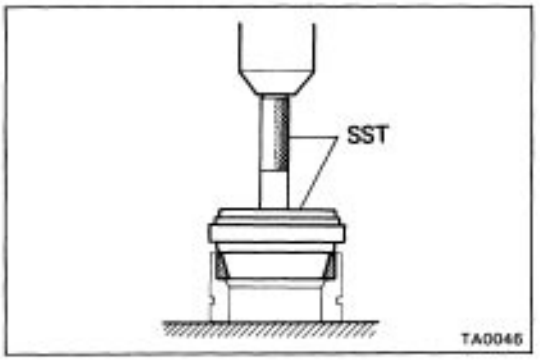

3. INSTALL SHAFT BEARING OUTER RACE TO CAGE

Using SST, press a new outer race into the cage.
SST 09350–32014 (09351–32111, 09351–32130)

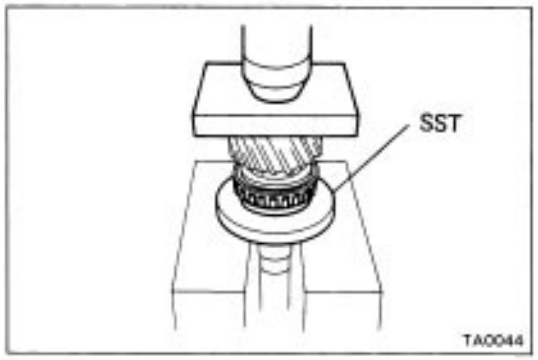

4. INSTALL DRIVE PINION SHAFT BEARING

Using SST, press in a new bearing.
SST 09350–32014 (09351–32100)

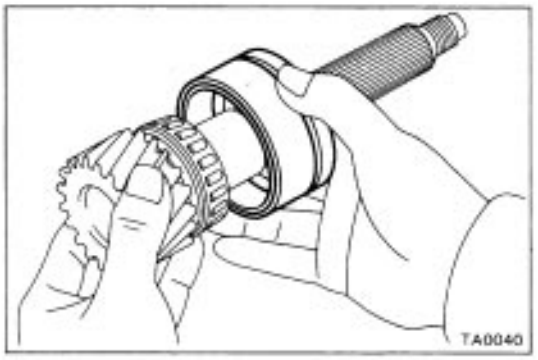

5. PLACE BEARING CAGE ONTO DRIVE PINION SHAFT

Be careful not to damage the oil seal with the splines.

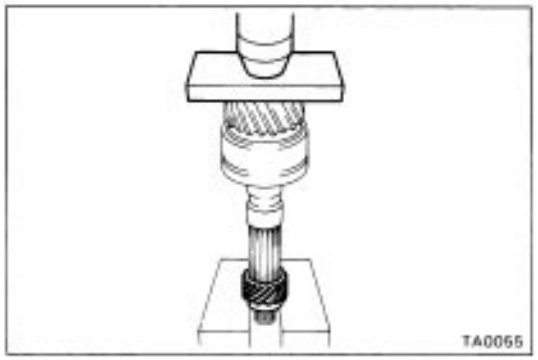

6. INSTALL GOVERNOR DRIVE GEAR

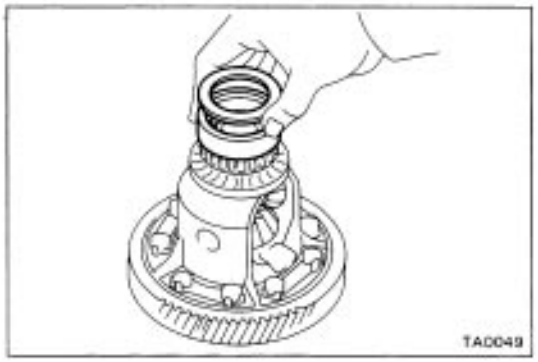

ADJUSTMENT OF DIFFERENTIAL SIDE BEARING PRELOAD

1. PLACE OUTER RACE AND ADJUSTING SHIM ONTO RH SIDE BEARING

Use the adjusting shim which was removed or one 2.40 mm (0.0945 in.) thickness.

2. PLACE DIFFERENTIAL CASE INTO TRANSAXLE CASE

Be sure to install the adjusting shim.

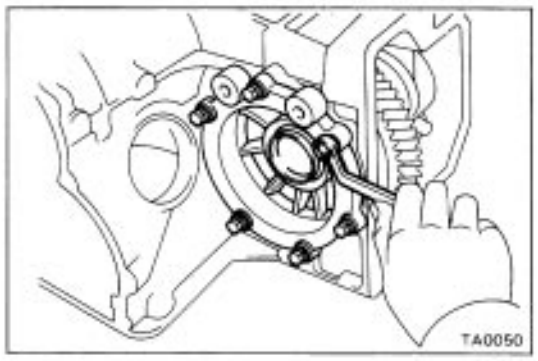

3. INSTALL LH BEARING RETAINER

(a) Do not install the O–ring yet.
(b) Do not coat the bolt threads with sealant yet.
(c) Temporarily tighten the five bolts evenly and gradually while turning the ring gear.

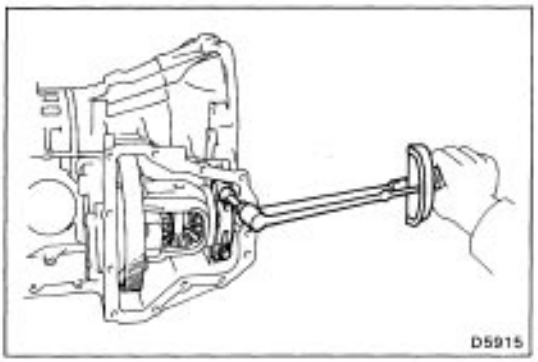

4. INSTALL RH SIDE BEARING CAP

Tighten the bolts evenly and gradually while turning the ring gear.

Torque: 500 kg–cm (36 ft–lb, 49 N–m)

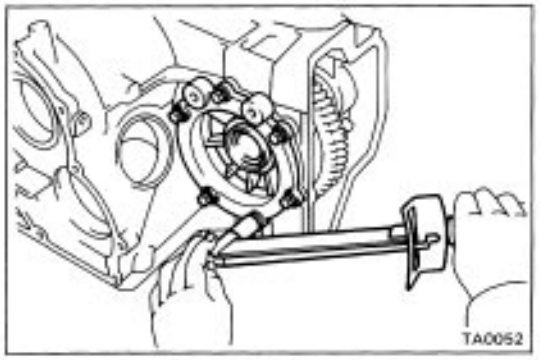

5. TIGHTEN LH BEARING RETAINER

Torque: 195 kg–cm (14 ft–lb, 19 N–m)

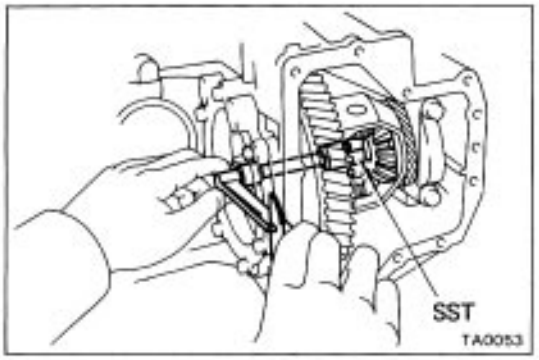

6. ADJUST SIDE BEARING PRELOAD

Using SST and a torque meter, measure the preload of the ring gear.

SST 09564–32011

Preload (at starting):

New bearing 10 – 16 kg–cm

(8.7 – 13.9 in.–lb,1.0 – 1.6 N–m)

Reused bearing 5 – 8 kg–cm

(4.3 – 6.9 in.–lb,0.5 – 0.8 N–m)

If the preload is not within specification, remove the differential case assembly.

Reselect the RH adjusting shim.

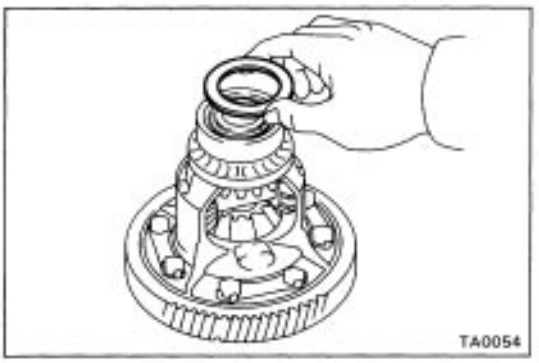

Thickness mm (in.)	Thickness mm (in.)
1.60 (0.0630)	2.15 (0.0846)
1.65 (0.0650)	2.20 (0.0866)
1.70 (0.0669)	2.25 (0.0886)
1.75 (0.0689)	2.30 (0.0906)
1.80 (0.0709)	2.35 (0.0925)
1.85 (0.0728)	2.40 (0.0945)
1.90 (0.0748)	2.45 (0.0965)
1.95 (0.0768)	2.50 (0.0984)
2.00 (0.0787)	2.55 (0.1004)
2.05 (0.0807)	2.60 (0.1024)
2.10 (0.0827)	2.65 (0.1043)

HINT: The preload will change about 3 – 4 kg–cm (2.6 – 3.5 in.–lb, 0.3 – 0.4 N–m) with each shim thickness.

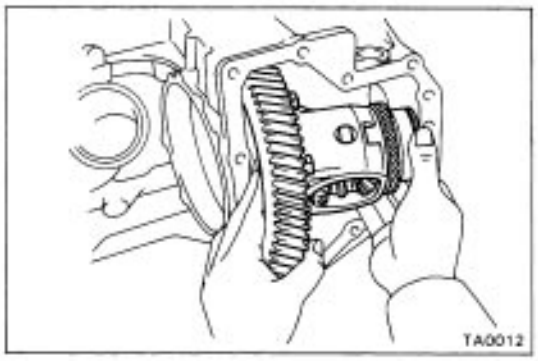

7. REMOVE DIFFERENTIAL CASE AND COMPONENT PARTS

If the preload is adjusted within specification, remove the bearing retainer, differential case, RH side bearing and shim.

Be careful not lose the adjusted shim.

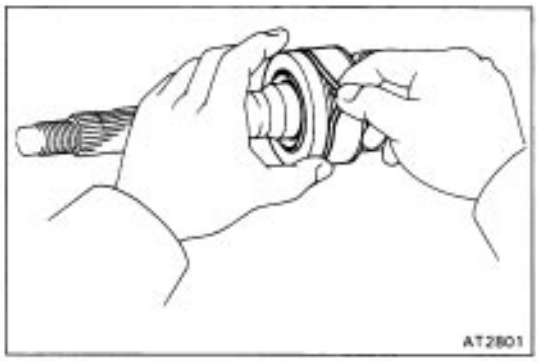

ASSEMBLY AND ADJUSTMENT OF DRIVE PINION SHAFT

1. INSTALL NEW O–RING ONTO BEARING CAGE



2. INSTALL DRIVE PINION SHAFT INTO CASE

Slightly tap the cage into the case until the groove with the bore can be seen.

HINT: Drive in the bearing cage until the surface of the bearing cage passes through the groove with the bore.

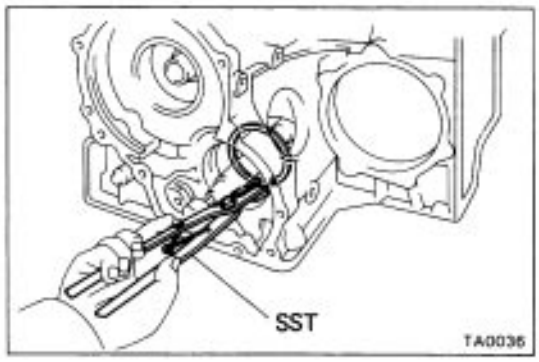

3. INSTALL SNAP RING INTO CASE

(a) Using SST, install the snap ring into the groove.
SST 09350–32014 (09351–32050)

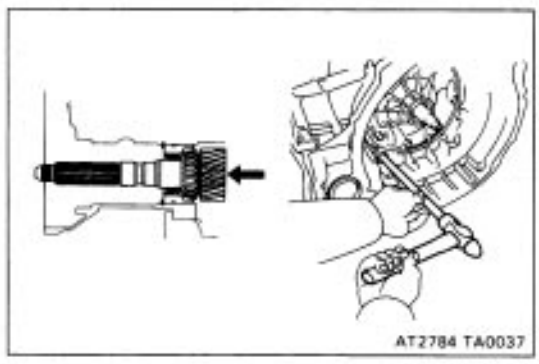

(b) Slightly tap the drive pinion to fit the snap ring into the groove.

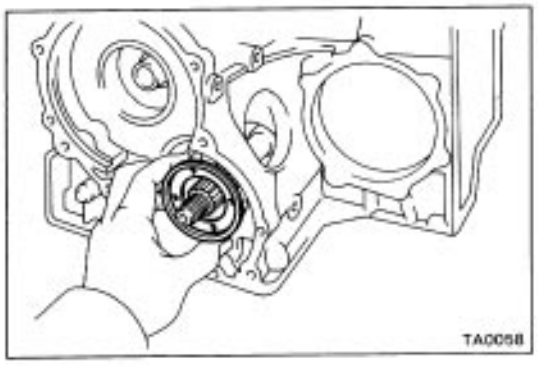

4. INSTALL OIL SLINGER

Install the oil slinger, facing the lip outward.

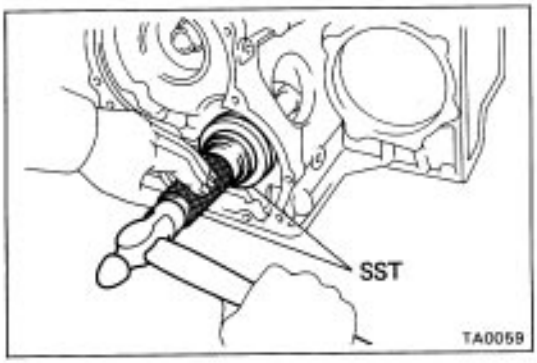

5. INSTALL OUTER RACE

Using SST, drive the outer race into the case.
SST 09350–32014 (09351–32100, 09351–32140)

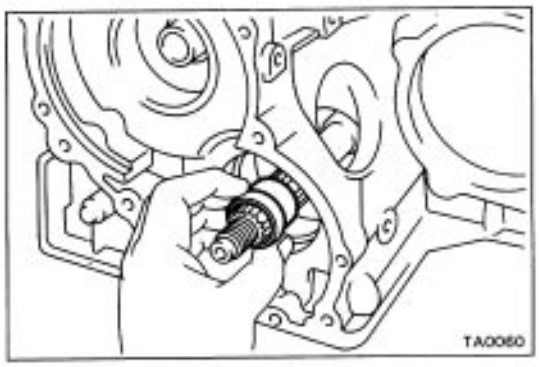

6. INSTALL NEW SPACER

Always use a new spacer.
Install the spacer with the small end first.

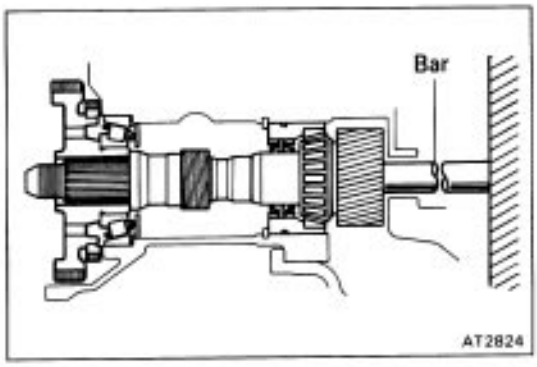

7. INSTALL COUNTER DRIVEN GEAR ONTO SHAFT

(a) Place a bar at the drive pinion side and position the other end of the bar against a vise or such.

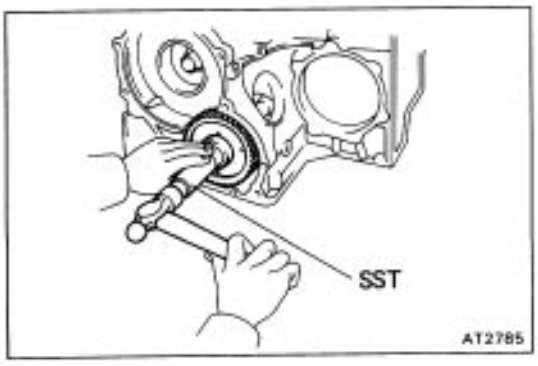

(b) Drive the gear onto the shaft until the nut can be installed on the threads of the shaft.

NOTICE: Be careful not to cause an impact to the transmission case.

SST 09350–32014 (09351–32140)

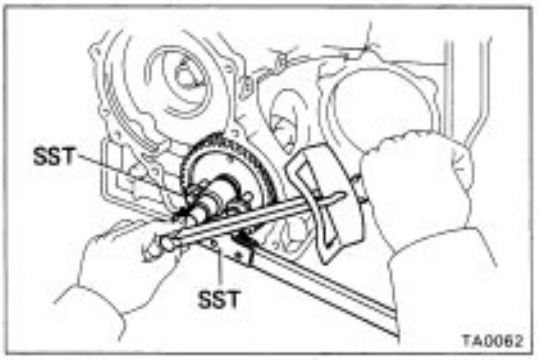

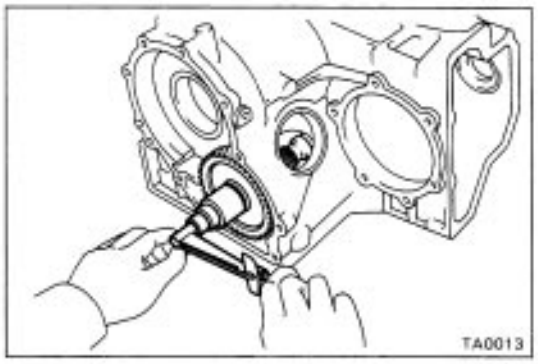

8. ADJUST DRIVE PINION PRELOAD

(a) Coat the threads and surface of the nut with MP grease.

(b) Using SST to hold the gear, tighten the nut.

Torque: 1,750 kg–cm (127 ft–lb, 172 N–m)

SST 09330–00021, 09350–32014 (09351–32032)

(c) Turn the gear counterclockwise and clockwise several times.

(d) Using a torque meter, measure the preload of the drive pinion.

Preload (at starting):

New bearing 10 – 16 kg–cm

(8.7 – 13.9 in.–lb,1.0 – 1.6 N–m)

Reused bearing 5 – 8 kg–cm

(4.3 – 6.9 in.–lb,0.5 – 0.8 N–m)

- If the preload is greater than specified, replace the bearing spacer.
- If the preload is less than specified, retighten the nut 130 kg–cm (9 ft–lb, 13 N–m) at a time until the specified preload is reached.

If the maximum torque is exceeded while retightening the nut, replace the bearing spacer and repeat the preload procedure.

Do not back off the nut to reduce the preload.

Maximum torque: 2,950 kg–cm (213 ft–lb, 289 N–m)

(e) If the preload is adjusted within specification, make a note of it.

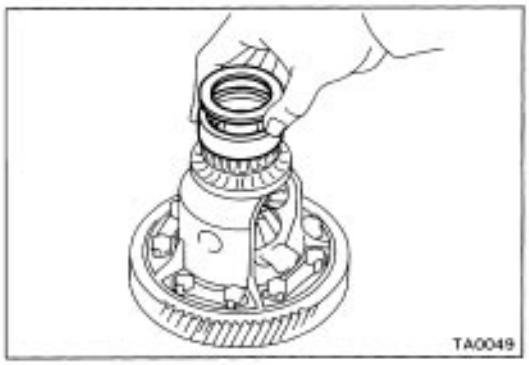

ASSEMBLY OF DIFFERENTIAL

1. PLACE OUTER RACE AND SELECTED ADJUSTING SHIM ONTO RH SIDE BEARING

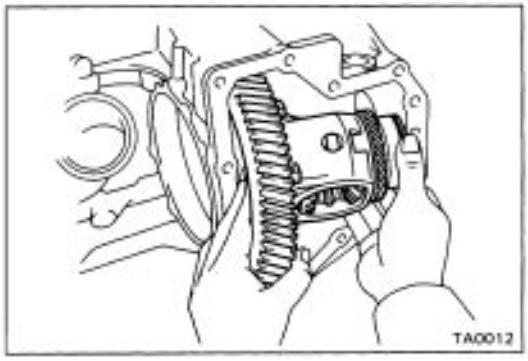

2. PLACE DIFFERENTIAL CASE INTO CASE

Be sure to install the adjusting shim into place.

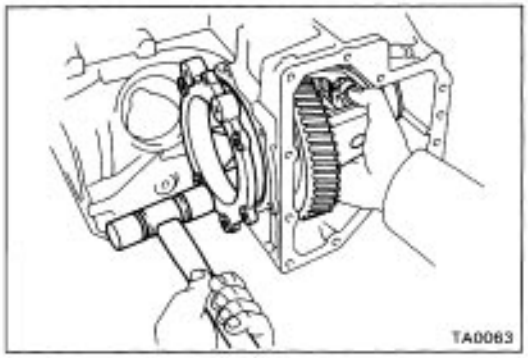

3. INSTALL LH BEARING RETAINER

(a) Install a new O–ring.

(b) While holding the differential case centered with the retainer, tap in the retainer.

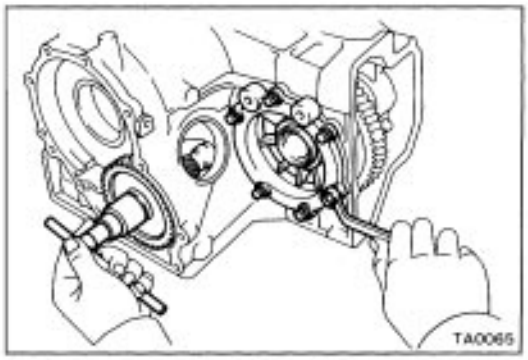

(c) Clean the threads of the bolts and case with white gasoline.

(d) Coat the threads of the bolts with sealant.

Sealant: Part No. 08833–00070, THREE BOND 1324 or equivalent

(e) Temporarily tighten the bolts evenly and gradually while turning the ring gear.

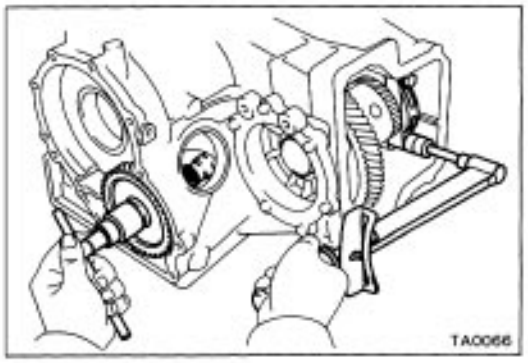

4. INSTALL RH SIDE BEARING CAP

Tighten the bolts evenly and gradually while turning the ring gear.

Torque: 500 kg–cm (36 ft–lb, 49 N–m)

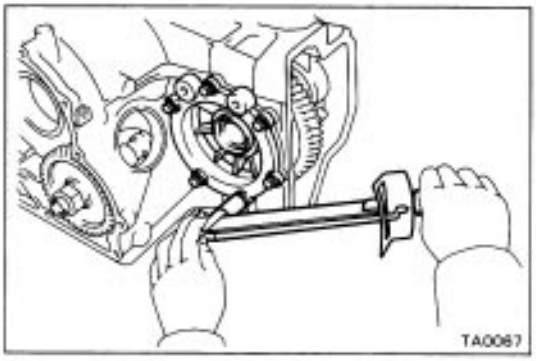

5. TIGHTEN LH BEARING RETAINER

Torque: 195 kg–cm (14 ft–lb, 19 N–m)

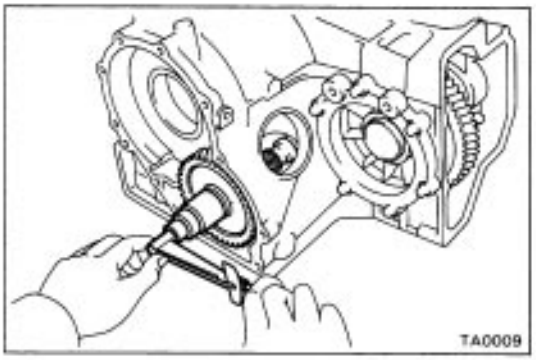

6. MEASURE TOTAL PRELOAD

Using a torque meter, measure the total preload of the drive pinion shaft.

Total preload (at starting):

Add drive pinion preload (See page AT–210)

New bearing 2.6 – 4.3 kg–cm

(2.3 – 3.7 in.–lb, 0.3 – 0.4 N–m)

Reused bearing 1.3 – 2.2 kg–cm

(1.1 – 1.9 in.–lb, 0.1 – 0.2 N–m)

If the preload is not within specification, disassemble and readjust.

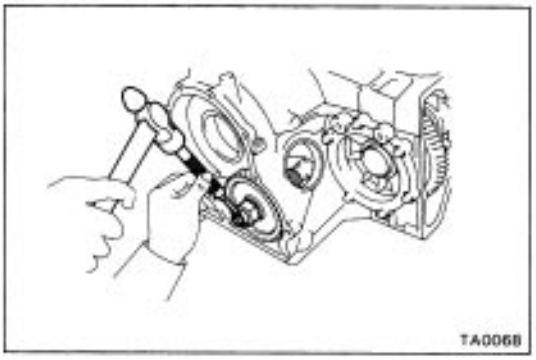

7. STAKE COUNTER DRIVEN GEAR NUT

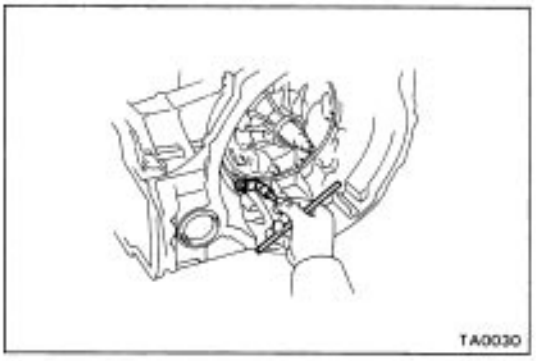

8. INSTALL DRIVE PINION CAP

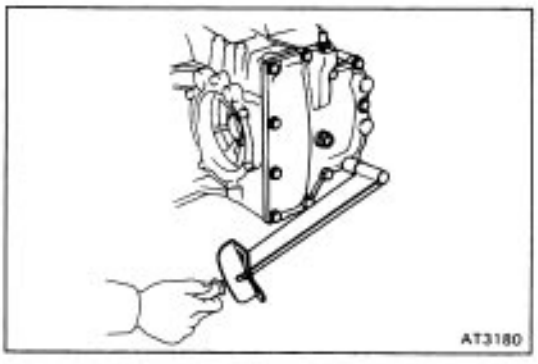

9. INSTALL CARRIER COVER

(a) Clean the threads of the bolts and case with white gasoline.

(b) Coat the threads of the bolts with sealant.

Sealant: Part No. 08833–00070, THREE BOND 1324 or equivalent

(c) Install the carrier cover over the gasket.

Torque: 250 kg–cm (18 ft–lb, 25 N–m)

Differential (A240L)

COMPONENTS

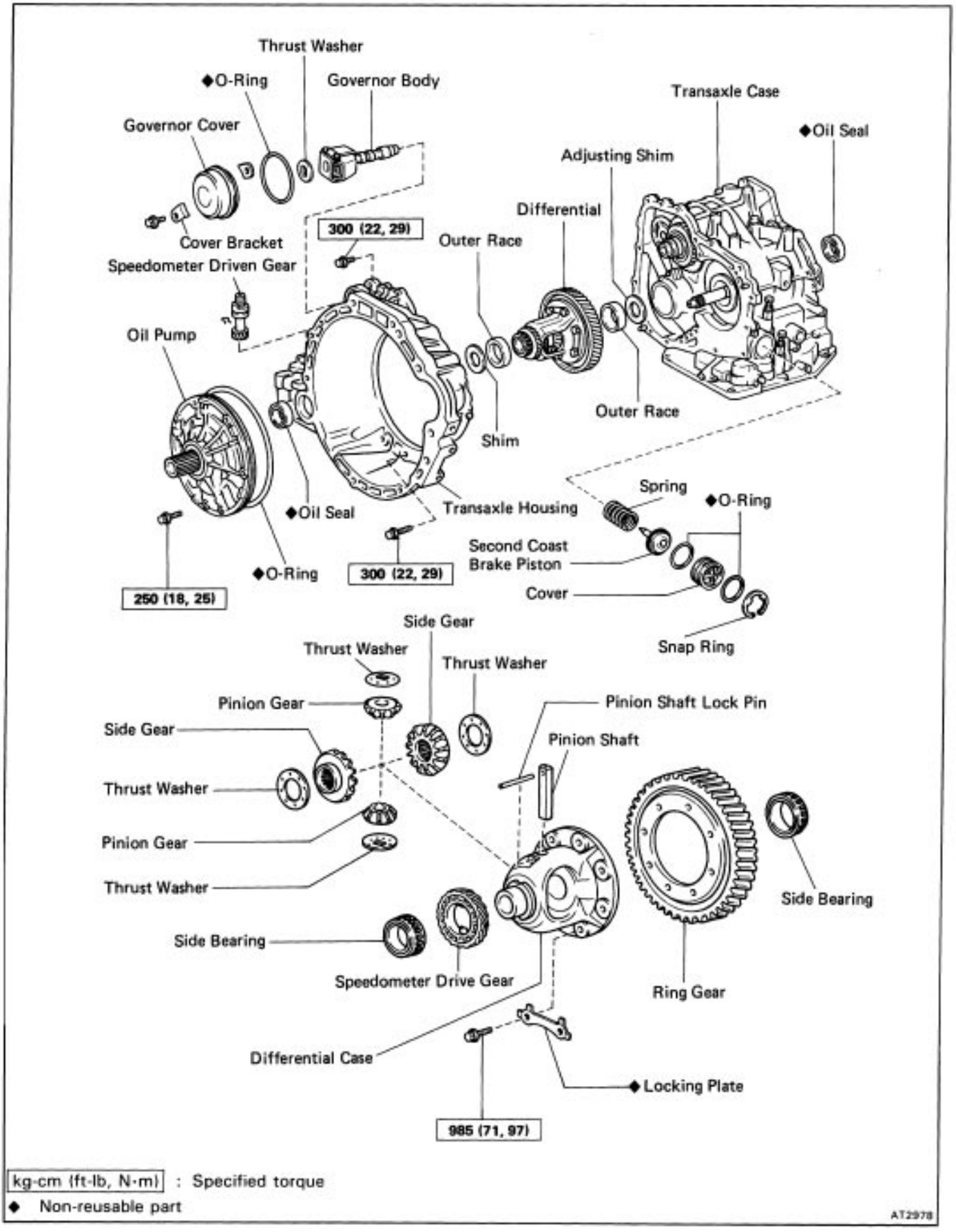

kg-cm (ft-lb, N·m) : Specified torque

◆ Non-reusable part

AT2978

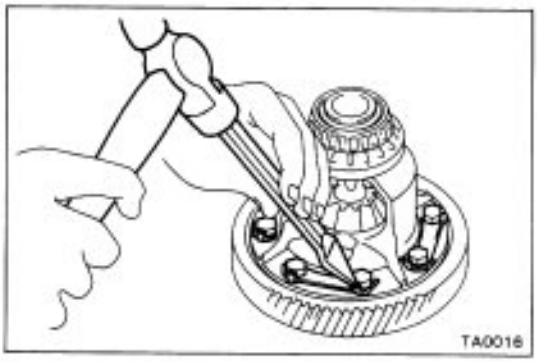

DISASSEMBLY OF DIFFERENTIAL

1. REMOVE RING GEAR

(a) Place the matchmarks on the ring gear and differential case.

(b) Loosen the staked part of the locking plate.

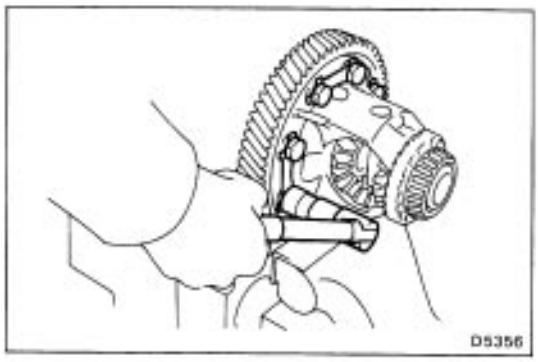

(c) Remove the eight bolts and four locking plates.

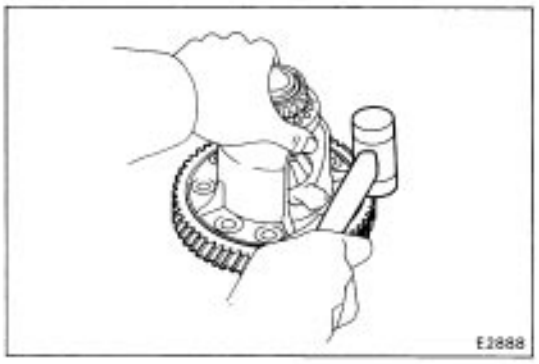

(d) Using a plastic hammer, tap on the ring gear to remove it from the case.

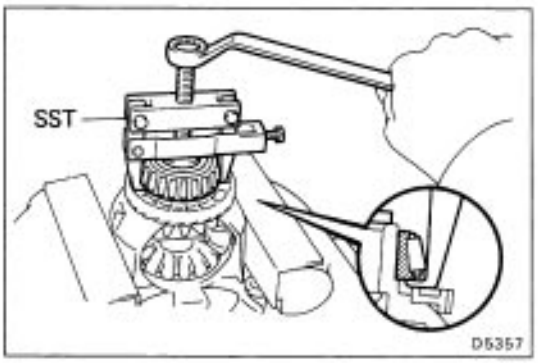

2. REMOVE SIDE BEARINGS FROM DIFFERENTIAL CASE

(a) Setting SST to the cut–out portion on the speedometer drive gear, remove the bearing from the differential case.
SST 09502–10012

(b) Remove the speedometer drive gear.

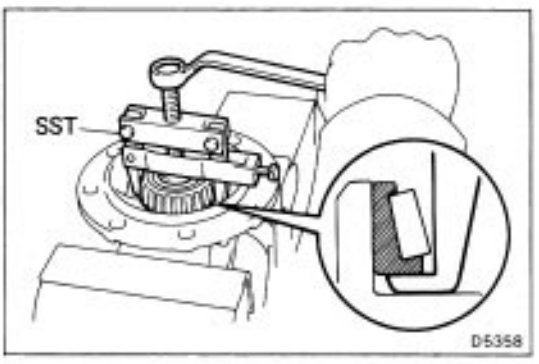

(c) Setting SST to the cut–out portion on the differential case, remove the bearing.
SST 09502–10012

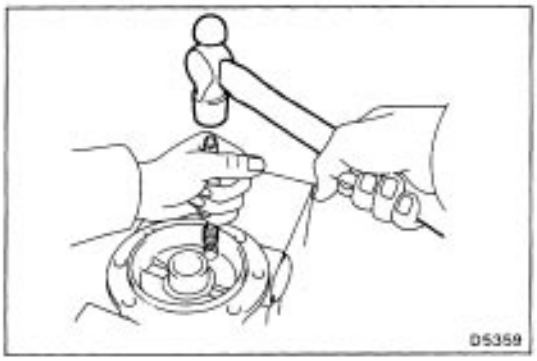

3. DISASSEMBLE DIFFERENTIAL CASE

(a) Drive out the pinion shaft lock pin from the ring gear side.

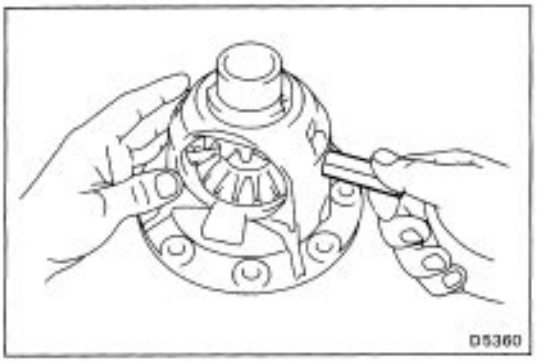

(b) Remove the pinion shaft from the case.

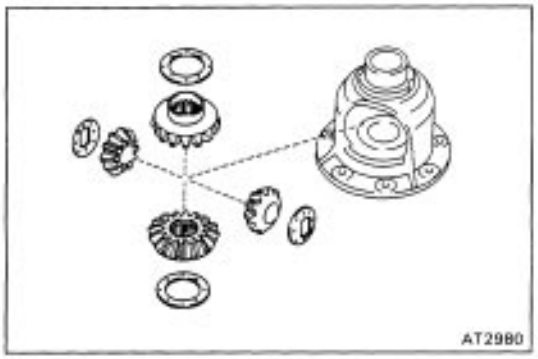

(c) Remove the two pinions, two side gears and four thrust washers.

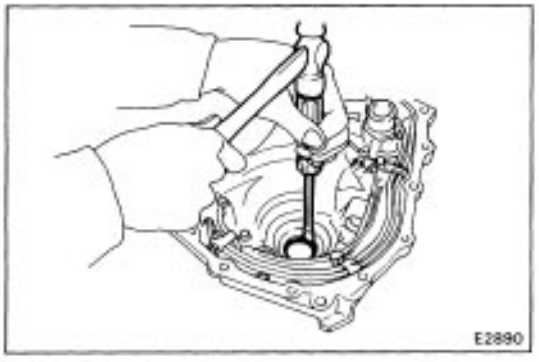

4. REMOVE OIL SEAL OF TRANSAXLE HOUSING

Using a screwdriver and a hammer, remove the oil seal.

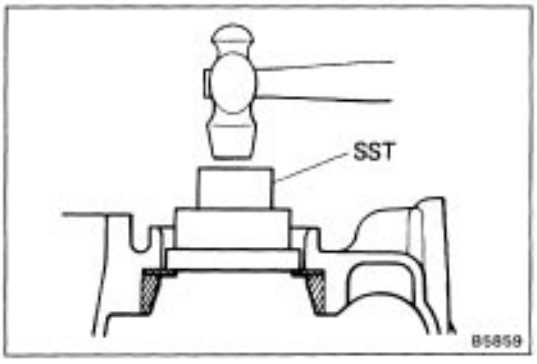

5. REMOVE SIDE BEARING OUTER RACE OF TRANSAXLE HOUSING

Using SST and a hammer, drive out the outer race and shim.

SST 09350–32014 (09351–32090)

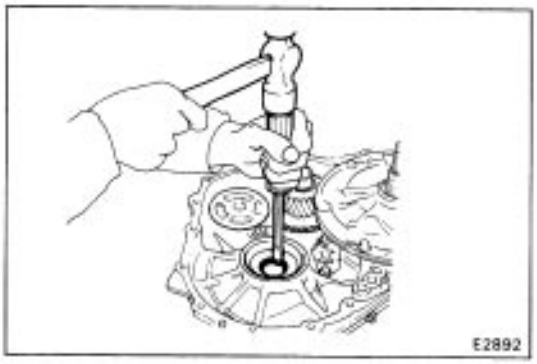

6. REMOVE OIL SEAL OF TRANSAXLE CASE

Using a screwdriver, remove the oil seal.

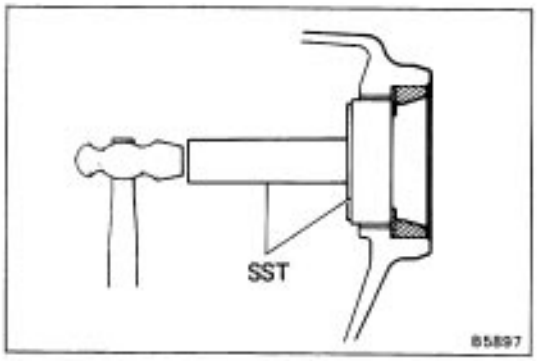

7. REMOVE SIDE BEARING OUTER RACE OF TRANSAXLE CASE

Using SST and a hammer, drive out the outer race and adjusting shim.

SST 09350–32014 (09351–32130, 09351–32150)

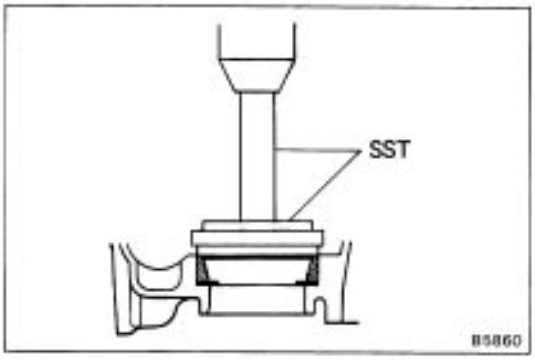

ASSEMBLY OF DIFFERENTIAL

1. INSTALL SIDE BEARING OUTER RACE OF TRANSAXLE HOUSING

(a) Place the shim onto the transaxle housing.

(b) Using SST and press, press a new outer race into the transaxle housing.

SST 09350–32014 (09351–32111, 09351–32130)

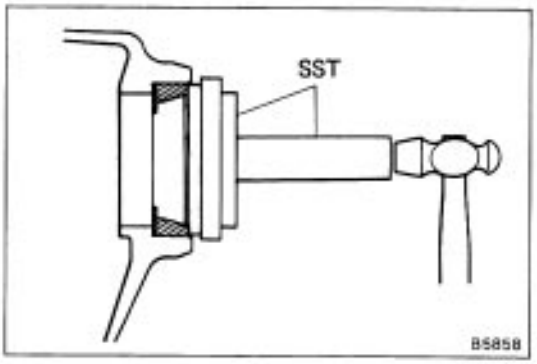

2. INSTALL SIDE BEARING OUTER RACE OF TRANSAXLE CASE

(a) Place the adjusting shim onto the transaxle case.

(b) Using SST and a hammer, drive in a new outer race into the transaxle case.

SST 09350–32014 (09351–32111, 09351–32130)

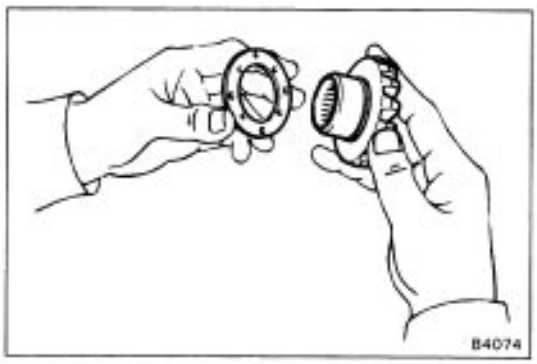

3. ASSEMBLE DIFFERENTIAL CASE

(a) Install the thrust washers to the side gears.

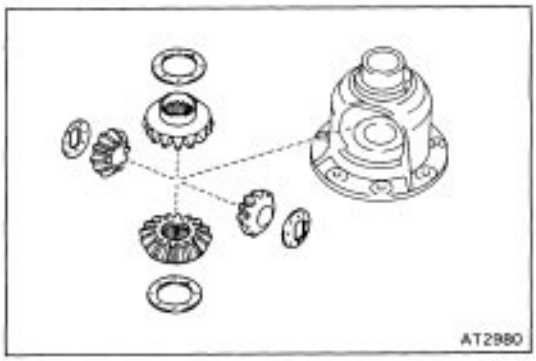

(b) Install the side gears with thrust washers, pinion gears and pinion thrust washers into the differential case.

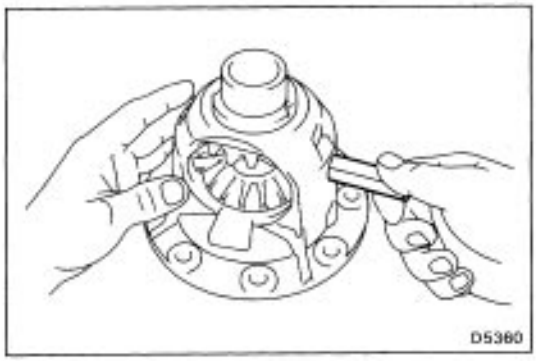

(c) Install the pinion shaft so as to align the lock pin holes on the pinion shaft and differential case.

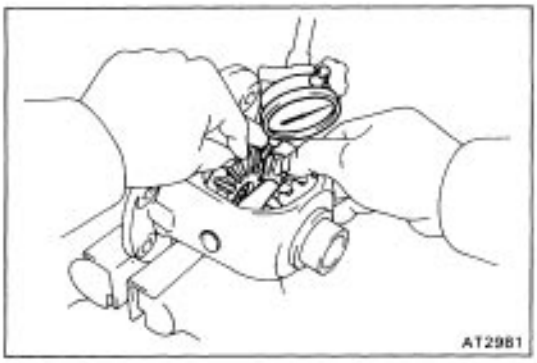

4. CHECK SIDE GEAR BACKLASH

(a) Measure the side gear backlash while holding one pinion gear toward the case.

Standard backlash: 0.05 – 0.20 mm(0.0020 – 0.0079 in.)

If the backlash is out of specification, install the correct thrust washer to the side gear.

(b) Referring to the table below, select thrust washers which will ensure that the backlash is within specification. Try to select washers of the same size of both sides.

Thrust washer thicknesses

Thickness mm (in.)	Thickness mm (in.)
0.95 (0.0374)	1.10 (0.0433)
1.00 (0.0394)	1.15 (0.0453)
1.05 (0.0413)	1.20 (0.0472)

If the backlash is not within specification, install a thrust washer of a different thickness.

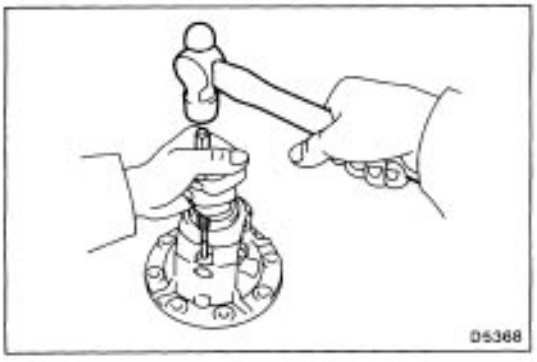

5. INSTALL LOCK PIN

(a) Using a hammer and punch, drive the lock pin through the case and hole in the pinion shaft.

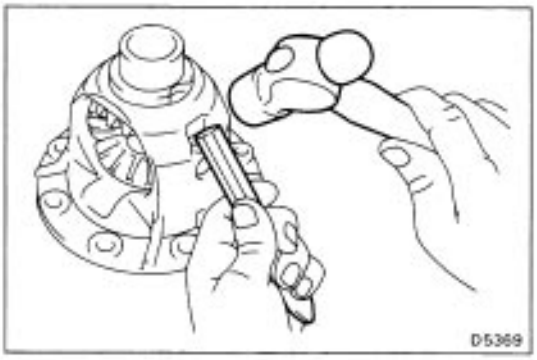

(b) Stake the differential case.

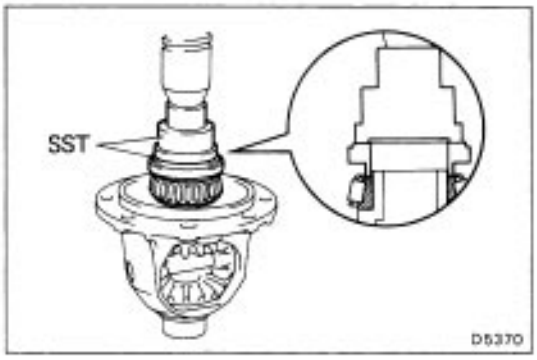

6. INSTALL SIDE BEARINGS TO DIFFERENTIAL CASE

(a) Using SST and press, press the side bearing into the differential case.
SST 09350–32014 (09351–32090, 09351–32120)

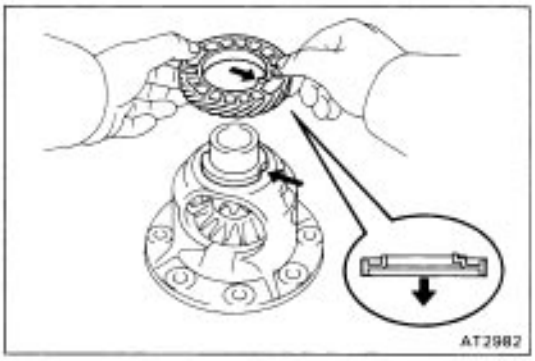

(b) Install the speedometer drive gear to the differential case.

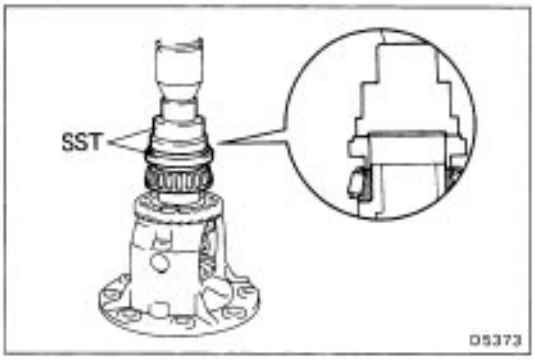

(c) Using SST and press, press the side bearing into the differential case.
SST 09350–32014 (09351–32090, 09351–32120)

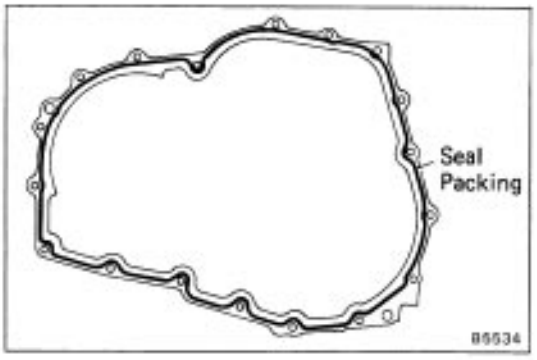

7. ADJUST SIDE BEARING PRELOAD

(a) Remove any packing material and be careful not to get oil on the contacting surfaces of the transaxle housing or transmission case.

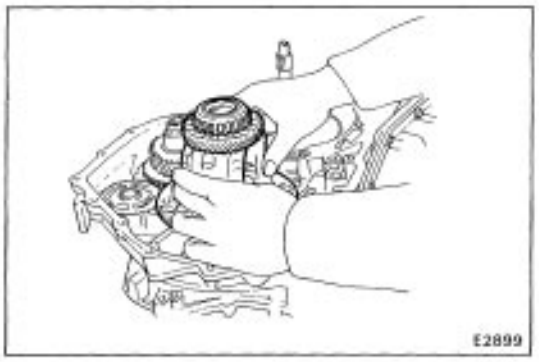

(b) Install the differential to the transaxle case.

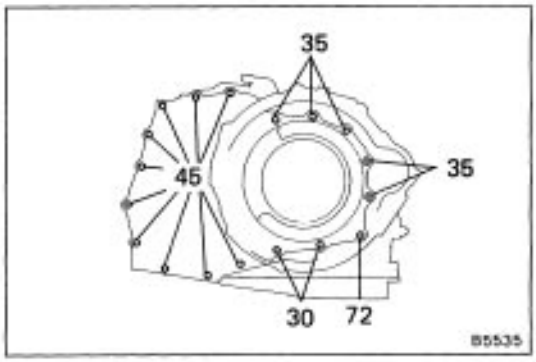

(c) Install the transaxle housing to the transaxle case.
(d) Install and tighten the bolts.
Torque: 300 kg–cm (22 ft–lb, 29 N–m)
HINT: Each bolt length (mm) is indicated in the illustration.

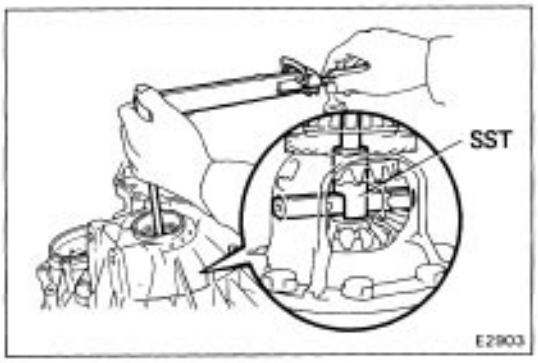

(e) Using SST, rotate the differential in both directions to snug the bearing down.
SST 09564–32011
(f) Using SST and a torque meter, measure the preload of the side bearing.
SST 09564–32011
Preload (at starting):
New bearing 8 – 14 kg–cm
(6.9 – 12.2 in. –lb, 0.8 – 1.4 N–m)
Used bearing 4 – 7 kg–cm
(3.5 – 6.1 in.–lb, 0.4 – 0.7 N–m)
If the preload is not within specification, remove the differential from the transaxle case. Re– select the transaxle case side adjusting shim.

Thickness mm (in.)	Thickness mm (in.)
2.00 (0.0787)	2.50 (0.0984)
2.05 (0.0807)	2.55 (0.1004)
2.10 (0.0827)	2.60 (0.1024)
2.15 (0.0846)	2.65 (0.1043)
2.20 (0.0866)	2.70 (0.1063)
2.25 (0.0886)	2.75 (0.1083)
2.30 (0.0906)	2.80 (0.1102)
2.35 (0.0925)	2.85 (0.1122)
2.40 (0.0945)	2.90 (0.1142)
2.45 (0.0965)	

HINT: The preload will change about 3 – 4 kg–cm (2.6 – 3.5 in.–lb, 0.3 – 0.4 N–m) with each shim thickness.

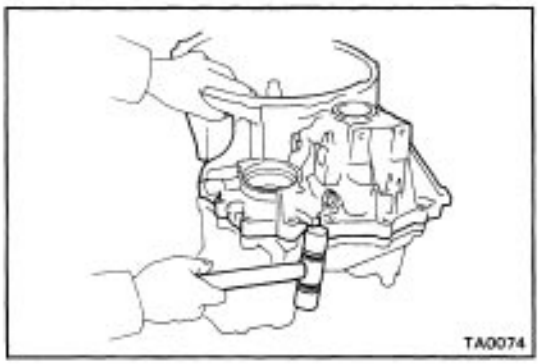

(g) Remove the bolts and transaxle housing.

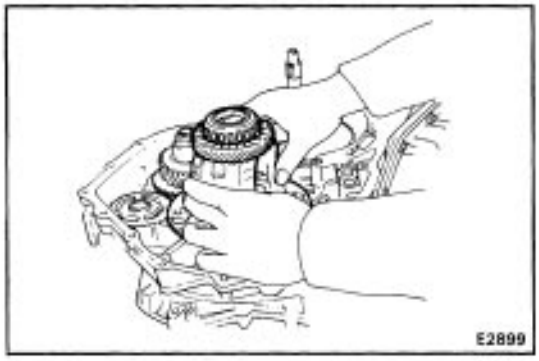

(h) Remove the differential from the transaxle case.

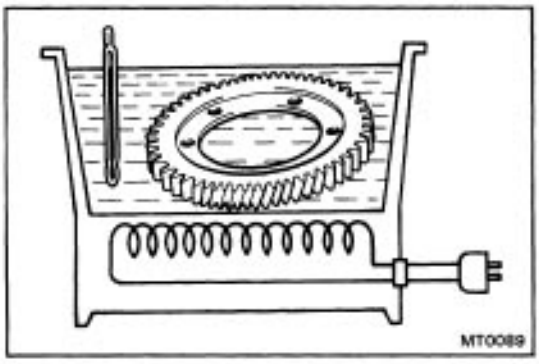

8. INSTALL RING GEAR TO DIFFERENTIAL

(a) Clean the contact surface of the differential case.

(b) Heat the ring gear to about 100˚C (212˚F) in an oil bath.

NOTICE: Do not heat the ring gear above 110˚C (230˚F).

(c) Clean the contact surface of the ring gear with cleaning solvent.

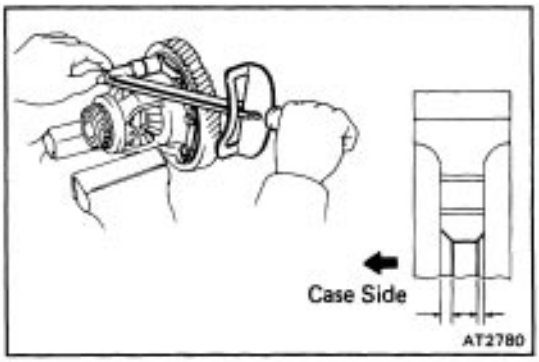

(d) Quickly install the ring gear on the differential case.

(e) Install new locking plates and set bolts.

HINT: Tighten the set bolts uniformly and a little at a time.

Torque the bolts.

Torque: 985 kg–cm (71 ft–lb, 97 N–m)

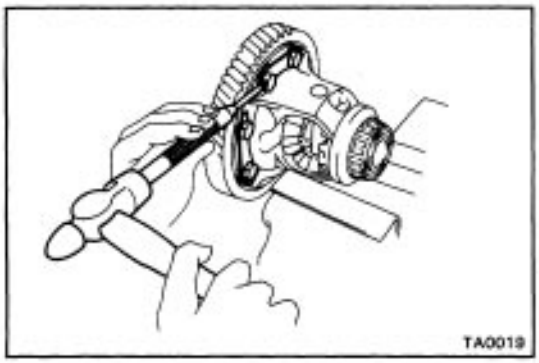

(f) Using a hammer and drift punch, stake the locking plates.

HINT: Stake one claw flush with the flat surface of the nut. For the claw contacting the protruding portion of the nut, stake only the half on the tightened side.

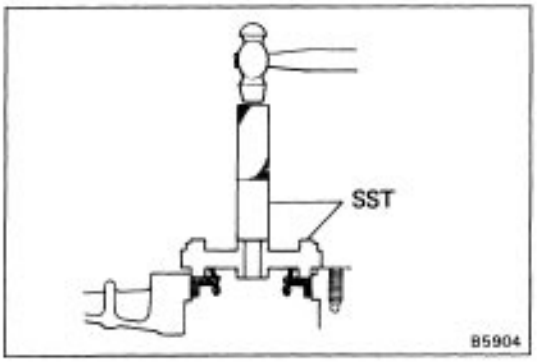

9. INSTALL OIL SEAL OF TRANSAXLE CASE

(a) Using SST and a hammer, drive in a new oil seal.
SST 09350–32014 (09351–32130, 09351–32111)

(b) Coat the lip of oil seal with MP grease.

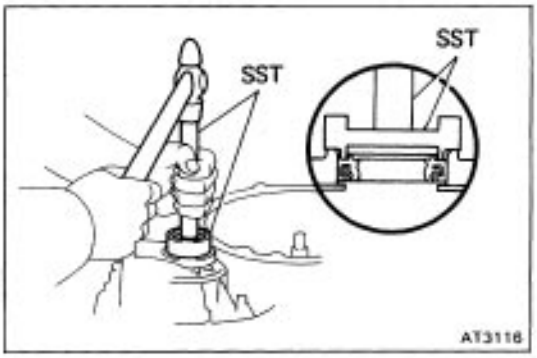

10. INSTALL OIL SEAL OF TRANSAXLE HOUSING

(a) Using SST and a hammer, drive in a new oil seal.
SST 09350–32014 (09351–32130, 09351–32150)

(b) Coat the lip of oil seal with MP grease.

Differential Assembly (A241H)

COMPONENTS

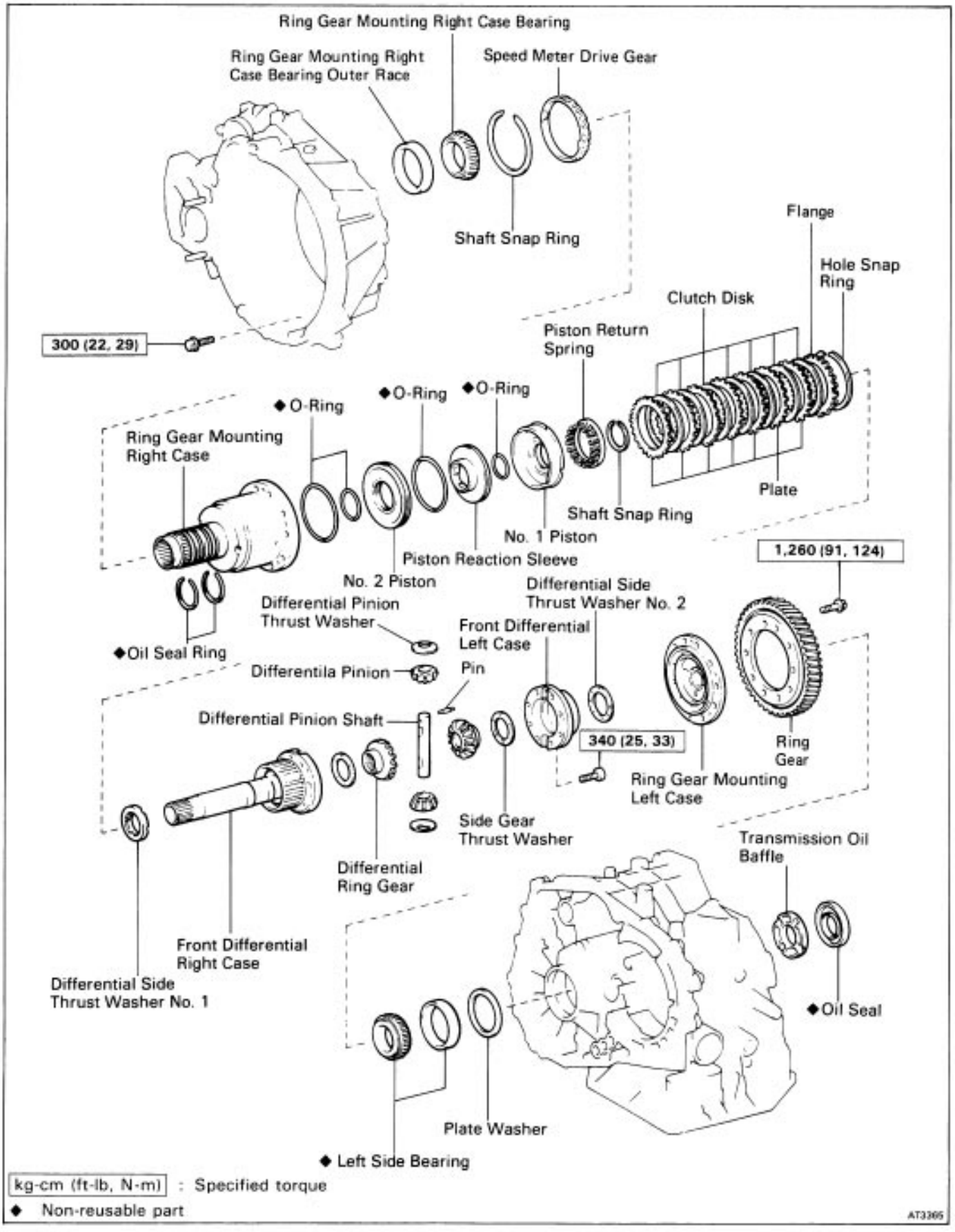

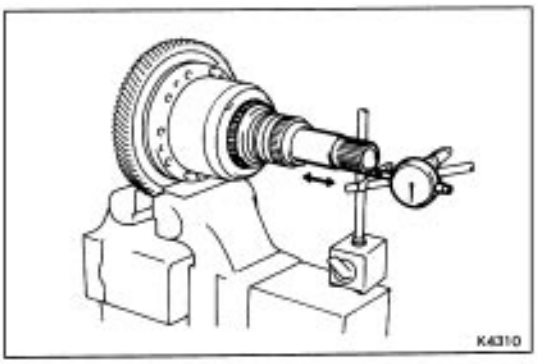

DISASSEMBLY OF DIFFERENTIAL ASSEMBLY

1. CHECK DIFFERENTIAL END PLAY

Using a dial indicator, measure the differential end play.

End play: 0.18 – 0.82 mm (0.0071 – 0.0323 in.)



2. REMOVE OIL SEAL RINGS

Remove two oil seal rings from the ring gear mounting right case.

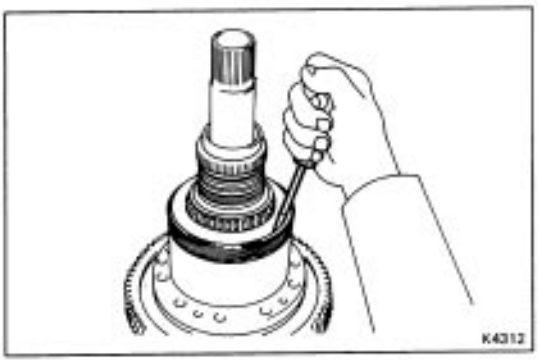

3. REMOVE SPEEDOMETER DRIVE GEAR

Using a screwdriver, remove the shaft snap ring and the speedometer drive gear.

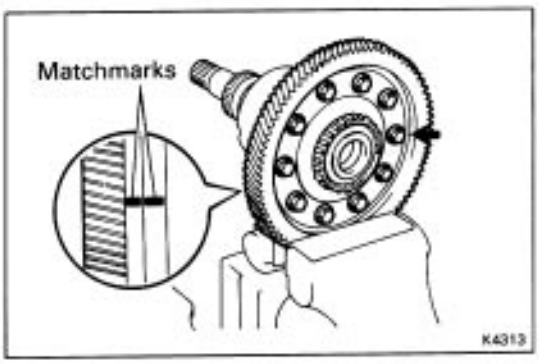

4. REMOVE RING GEAR MOUNTING LEFT CASE

(a) Place the matchmarks to the ring gear mounting left case and right case.

(b) Remove the ten bolts and left case.

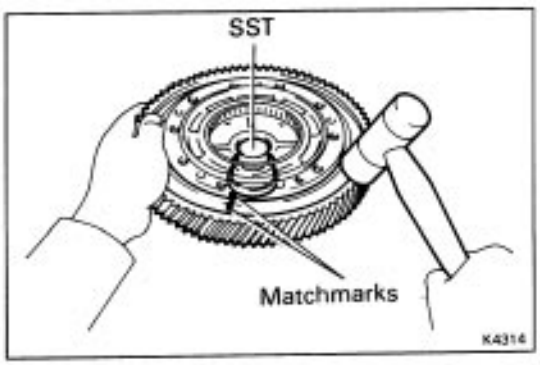

5. REMOVE RING GEAR

(a) Place the matchmarks on the ring gear and left case.

(b) Place the left case on SST.

SST 09350–32014 (09351–32090)

(c) Using a plastic hammer, remove the ring gear from the left case.

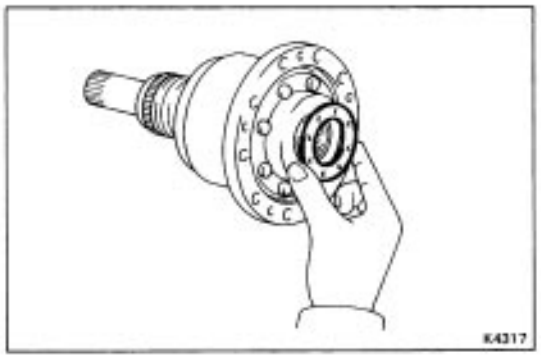

6. REMOVE FRONT DIFFERENTIAL CASE

(a) Remove the No.2 thrust washer.

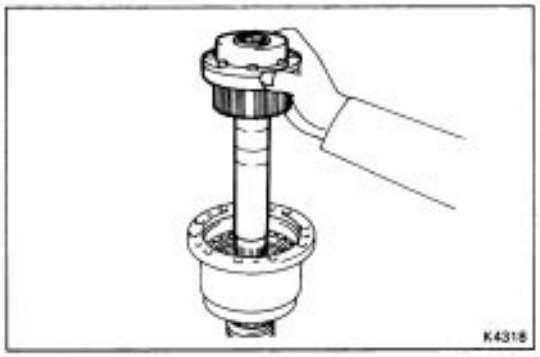

(b) Remove the front differential case from the ring gear mounting right case.

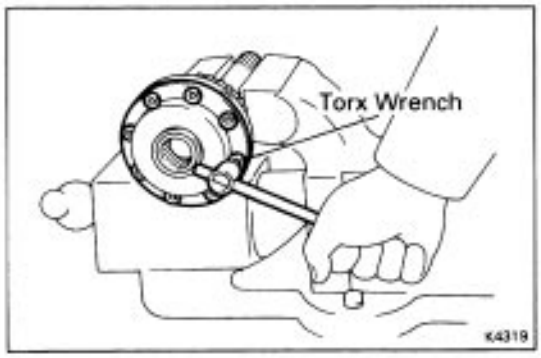

7. REMOVE FRONT DIFFERENTIAL LEFT CASE

(a) Using a torx wrench, remove the eight screws from the left case.

(b) Separate the left case and right case.

NOTICE: Do not scratch the contact surface of the needle bearing.

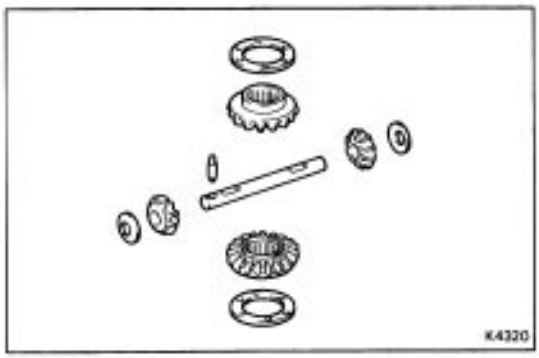

8. REMOVE DRIVE PINIONS AND SIDE GEARS

Remove the following parts:

- Differential pinion shaft
- Shaft pin
- Two pinion gears
- Two pinion thrust washers
- Two side gears
- Two side gear thrust washers

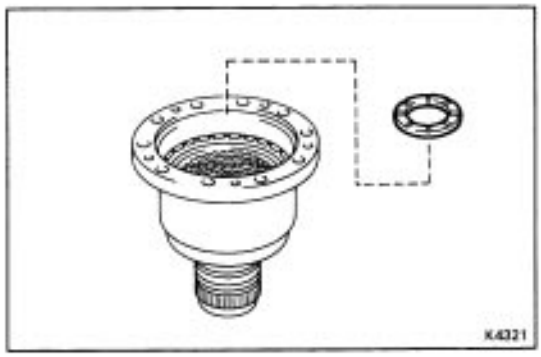

9. REMOVE NO.1 THRUST WASHER

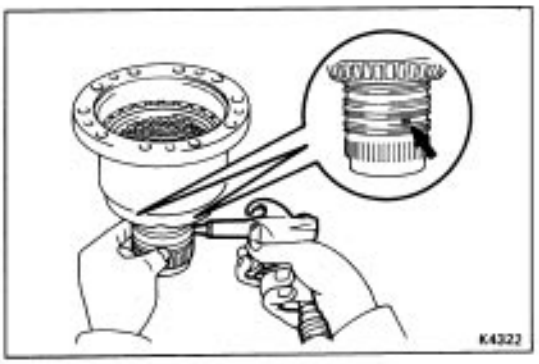

10. CHECK OPERATION OF DIFFERENTIAL LOCK CLUTCH PISTON

(a) Plug one hole of the right case with your hand.

(b) Apply compressed air into the other hole and confirm that the piston move.

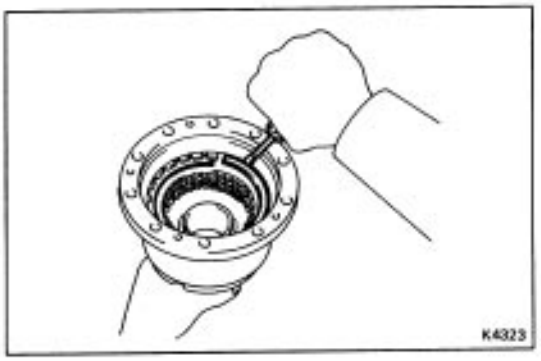

11. REMOVE DIFFERENTIAL LOCK CLUTCH

(a) Using a screwdriver, remove the snap ring.

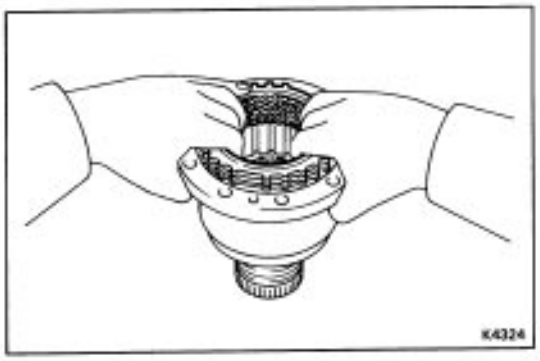

(b) Remove the flange, seven discs and seven plates.

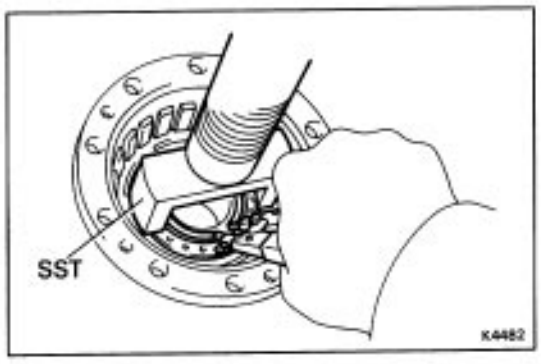

(c) Place SST, and compress the return spring.
SST 09350–32014 (09351–32070)

(d) Using the snap ring pliers, remove the snap ring.

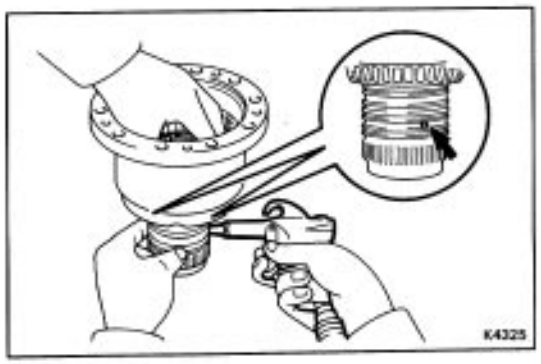

(e) Apply compressed air to the right case hole to remove the No.1 piston.

(f) Remove the O–ring from the No. 1 piston.

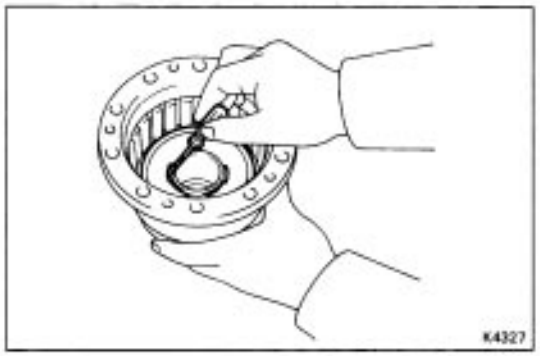

(g) Using a small screwdriver, remove the reaction sleeve and No.2 piston.
(h) Remove the three O–rings from the reaction sleeve and No.2 piston.

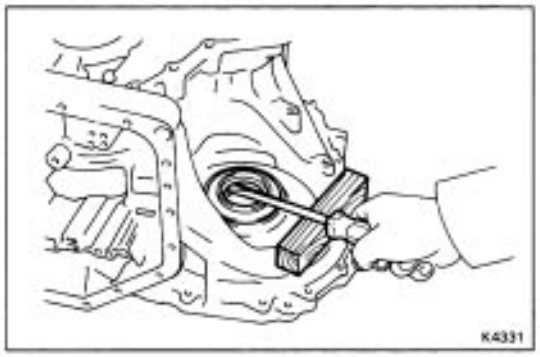

12. REMOVE TRANSAXLE CASE OIL SEAL

Using a screwdriver, remove the oil seal from the transaxle case.

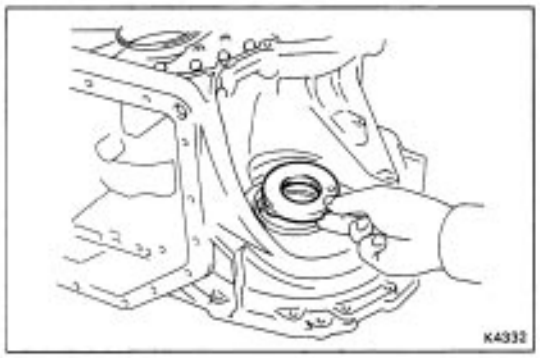

13. REMOVE TRANSMISSION OIL BAFFLE

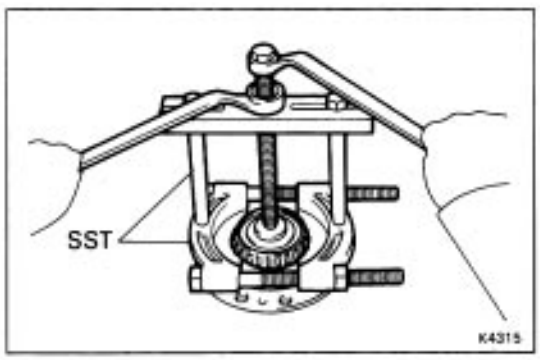

REPLACEMENT OF RING GEAR MOUNTING CASE BEARINGS

1. REMOVE RING GEAR MOUNTING LEFT CASE BEARING

Using SST, remove the bearing.
SST 09950–00020,09950–00030

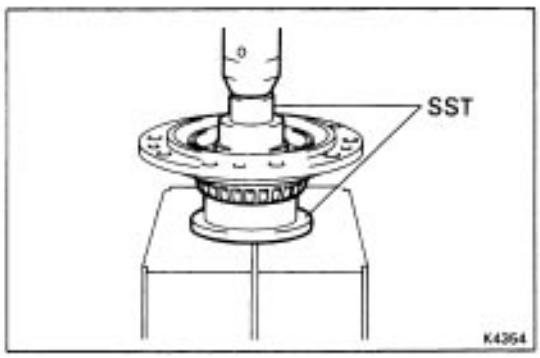

2. INSTALL RING GEAR MOUNTING LEFT CASE BEARING

Using a press and SST, press in the bearing.
SST 09316–20011, 09350–32014 (09351–32090)

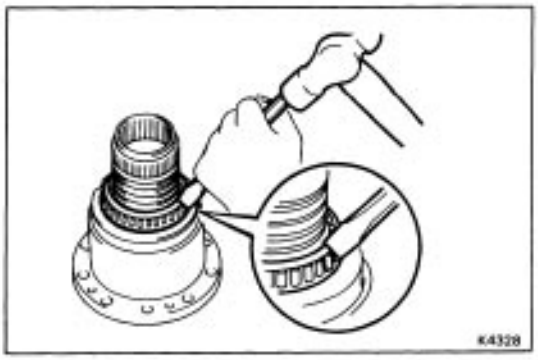

3. REMOVE RING GEAR MOUNTING RIGHT CASE BEARING

(a) Using a chisel and hammer, cut out the bearing cage_

NOTICE: Do not damage to the case.

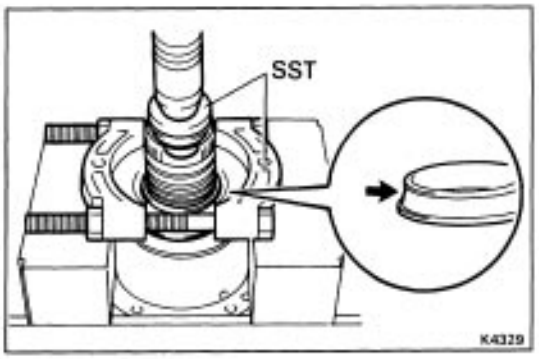

(b) Using a press and SST, press out the bearing inner race.

SST 09350–32014 (09351–32090),09950–00020

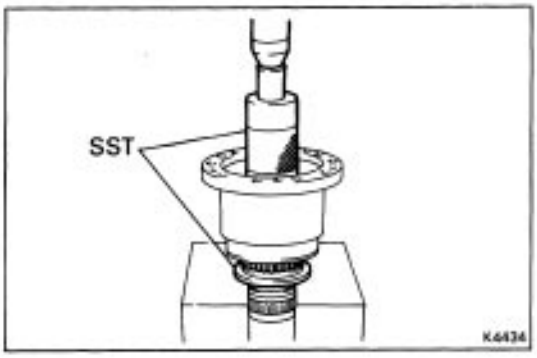

4. INSTALL RING GEAR MOUNTING RIGHT CASE BEARING

Using a press and SST, press in the new bearing.

SST 09316–60010 (09316– 10),09502–12010

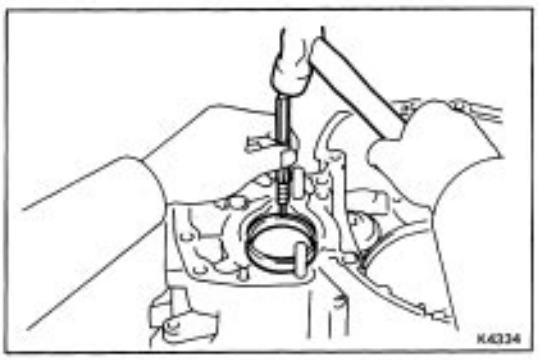

5. REMOVE RING GEAR MOUNTING CASE BEARING OUTER RACES

(Transaxle Housing Side)

Using a pin punch and hammer, drive out the outer race from the transaxle housing.

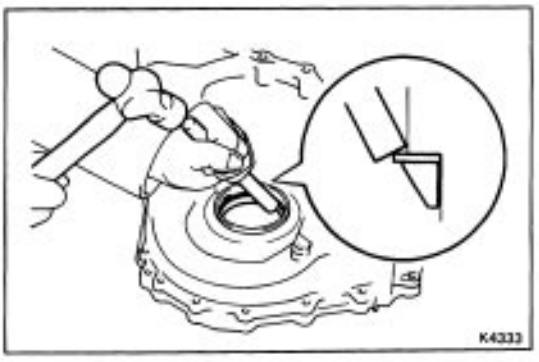

(Transaxle Case Side)

Using a brass bar and hammer, drive out the outer race and plate washer.

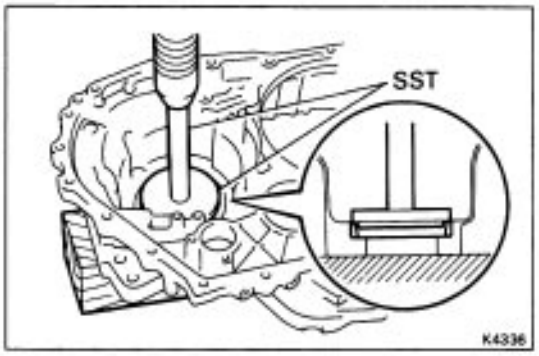

6. INSTALL RING GEAR MOUNTING CASE BEARING OUTER RACE

(Transaxle Housing Side)

Using a press and SST, press in the outer race.

SST 09608–35014 (09608–06020,09608–06150)

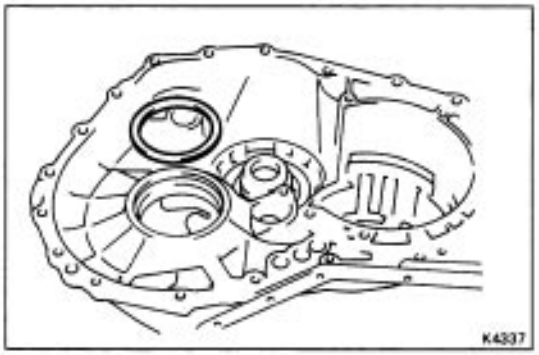

(Transaxle Case Side)

(a) Install the plate washer.

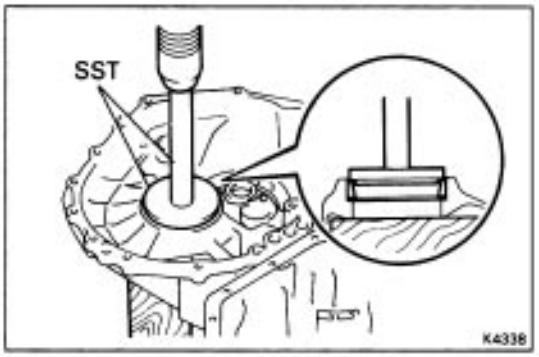

(b) Using a press and SST, press in the outer race.

SST 09608–35014 (09608–06020,09608–06180)

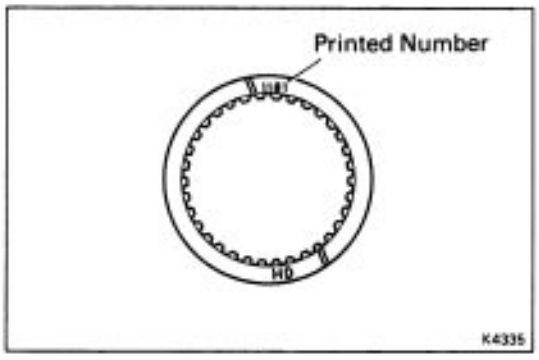

INSPECTION OF DIFFERENTIAL LOCK CLUTCH

INSPECT DISCS, PLATES AND FLANGE

Check that the sliding surface of disc, plate and flange won or burnt. If necessary, replace them.

HINT:

- If the lining of the disc is exfoliated or discolored, or eve a part of the printed number are defaced, replace a discs.
- Before assembling new discs, soak them in ATF for a least two hours.

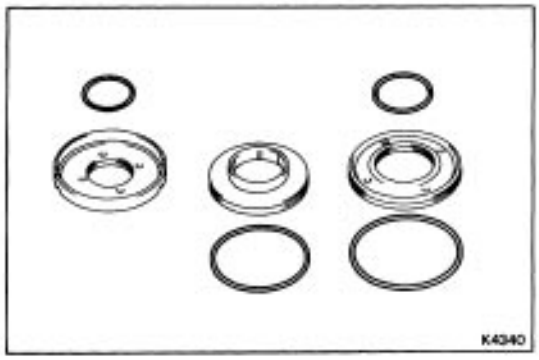

ASSEMBLY OF DIFFERENTIAL ASSEMBLY

1. INSTALL DIFFERENTIAL LOCK CLUTCH PISTON

(a) Coat the four O–rings with ATF.

(b) Install the four O–rings to the reaction sleeve and pistons.

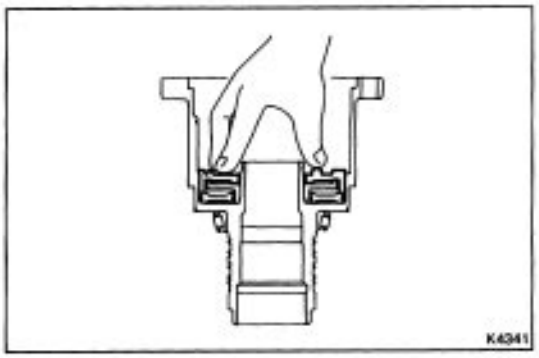

(c) Install the No.1, No.2 pistons and reaction sleeve to the ring gear mounting right case.

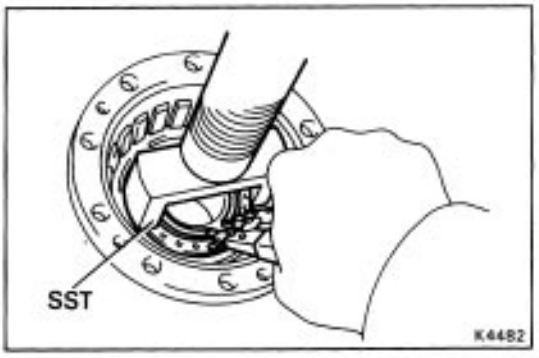

2. INSTALL RETURN SPRING

(a) Place the spring on the piston.

(b) Place SST on the spring retainer, and compress the spring with a press.

SST 09350–32014109351–32070j

(c) Using snap ring pliers, install the snap ring.

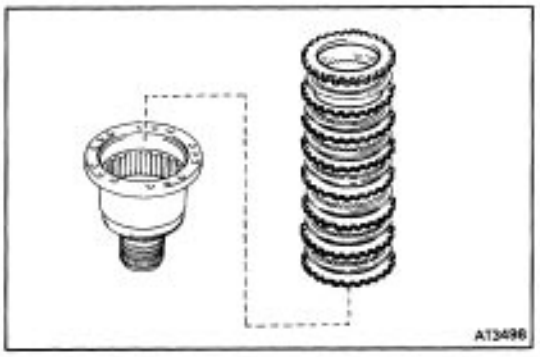

3. INSTALL PLATE, DISCS AND FLANGE

(a) Install the plate and discs.

Install in order: P=Plate D=Disc

P–D –P–D –P–D –P–D –P–D –P–D –P–D

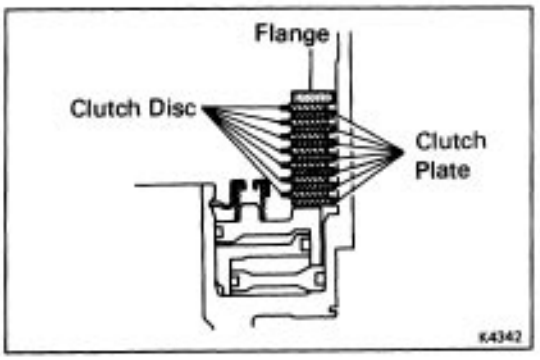

(b) Install the flange with a facing the flat end downward.

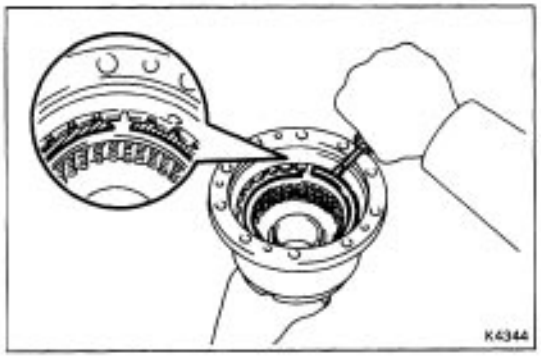

(c) Using a screwdriver, install the snap ring.

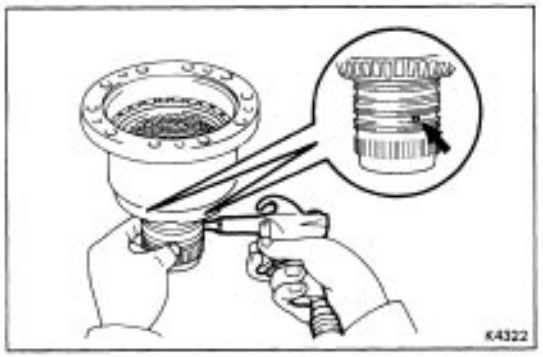

4. CHECK OPERATION OF DIFFERENTIAL LOCK CLUTCH PISTON

(a) Plug the one hole with your hand.

(b) Apply compressed air into the other hole and be sure that the piston move.

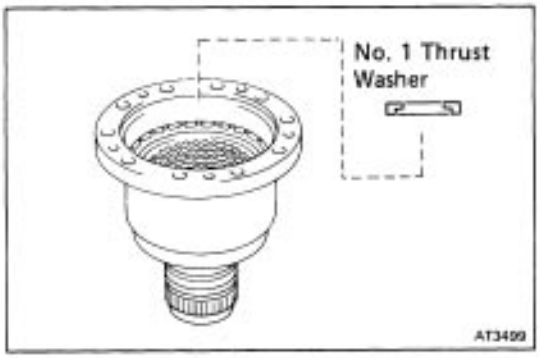

5. INSTALL NO.1 THRUST WASHER

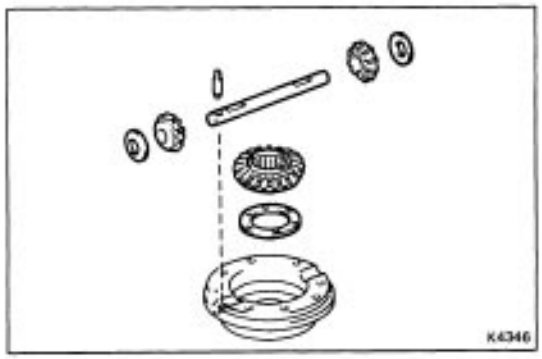

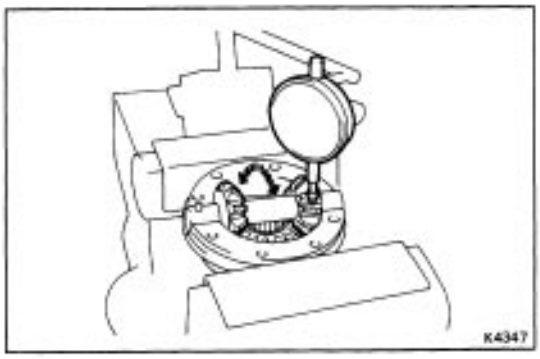

6. CHECK AND ADJUST FRONT DIFFERENTIAL SIDE GEAR BACKLASH

(Front Differential Left Case)

(a) Install the flowing parts:

- Side gear thrust washer
- Side gear
- Two differential pinion gear
- Two pinion gear thrust washer
- Pinion shaft
- Pinion shaft pin

(b) Using a dial indicator, measure the backlash one pinion gear while holding the side gear toward the case.

Backlash: 0.05 – 0.20 mm (0.0020 – 0.0079 in.)

If not within specification select the side gear thrust washer.

NOTICE: Do not tighten the vise too tight.

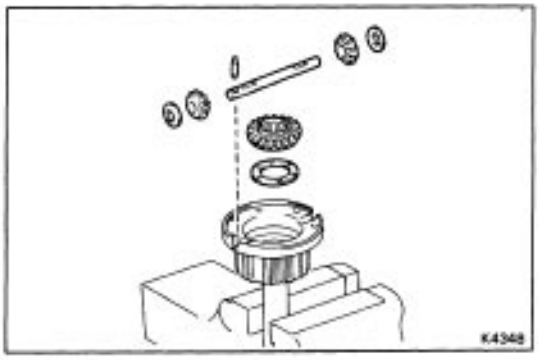

(Front Differential Right Case)

(a) Install the following parts:

- Side gear thrust washer
- Side gear
- Two differential pinion gear
- Two pinion gear thrust washer
- Pinion shaft
- Pinion shaft pin

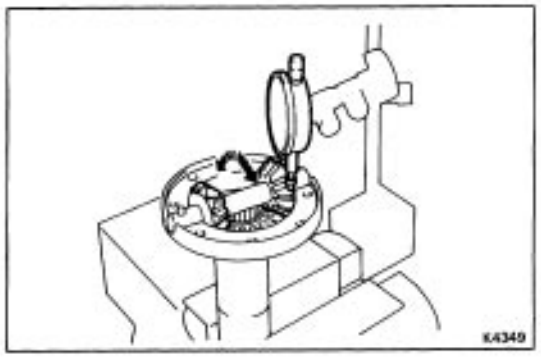

(b) Using a dial indicator, measure the backlash one pinion gear while holding the side gear toward the case.

Backlash: 0.05 – 0.20 mm (0.0020 – 0.0079 in.)

If not within specification select the side gear thrust washer.

Mark	Thickness mm (in.)	Mark	Thickness mm (in.)
A	1.00 (0.0394)	E	1.20 (0.0472)
B	1.05 (0.0413)	F	1.25 (0.0492)
C	1.10 (0.0433)	G	1.30 (0.0512)
D	1.15 (0.0453)		

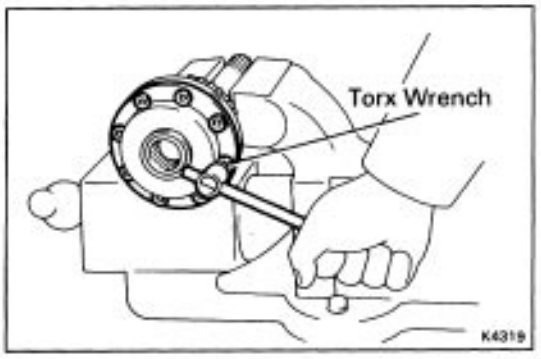

7. INSTALL FRONT DIFFERENTIAL LEFT CASE

(a) Install the left case to the right case.

(b) Using a torx wrench, torque the eight torx screws.

Torque: 340 kg–cm (25 ft–lb, 33 N–m)

NOTICE: Do not scratch the contact surface of the needle bearing.

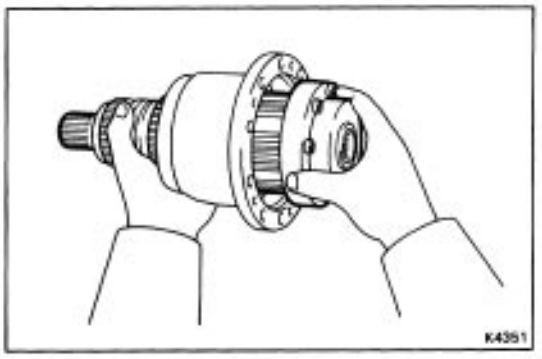

8. INSTALL FRONT DIFFERENTIAL CASE

(a) Install the front differential case to the ring gear mounting right case.

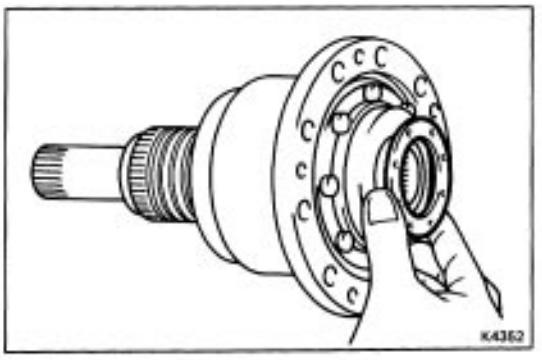

(b) Install the No.2 thrust washer.

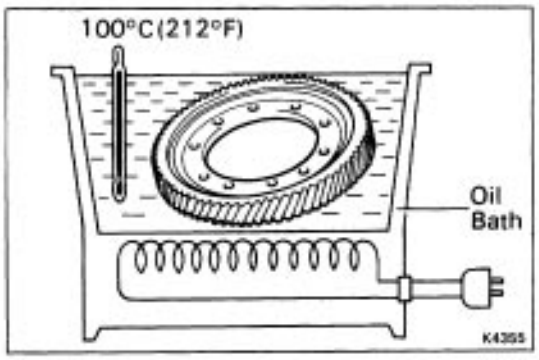

9. INSTALL RING GEAR

(a) Clean the contact surface of the ring gear mounting left case.

(b) Heat the ring gear to about 100˚C (212˚F) in an oil bath.

NOTICE: Do not heat the ring gear above 110˚C (230˚F)

(c) Clean the contact surface of the ring gear with cleaning solvent.

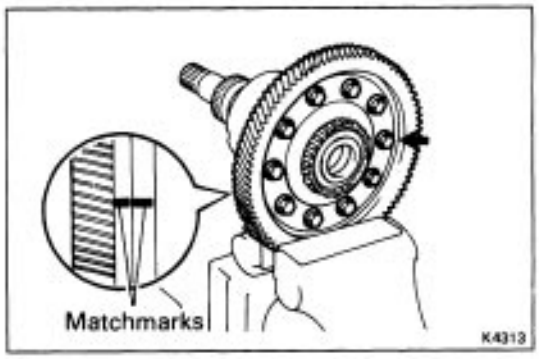

(d) Then quickly install the ring gear on the left case.

HINT: Align the matchmarks on the left case and ring gear.

(e) Torque the ten bolts.

Torque: 1,260 kg–cm (91 ft–lb, 124 N–m)

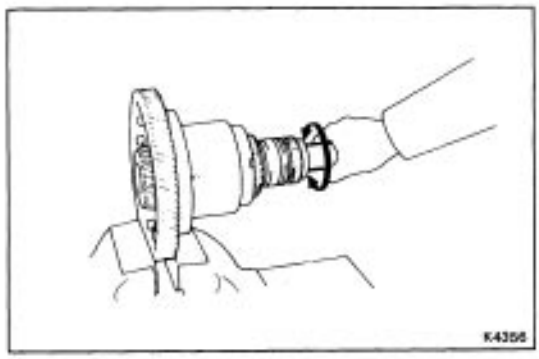

10. CHECK OPERATION OF FRONT DIFFERENTIAL

Check that the front differential turns smoothly.

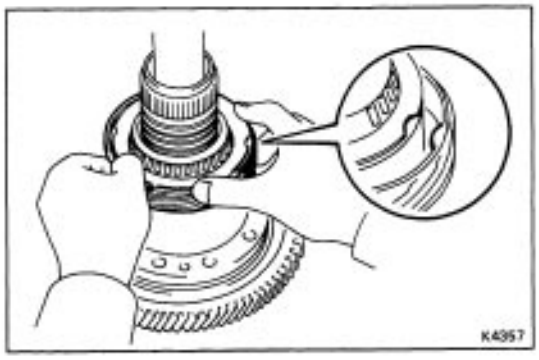

11. INSTALL SPEEDOMETER DRIVE GEAR

(a) Place the speedometer drive gear on the ring gear mounting case.

(b) Install the snap ring.

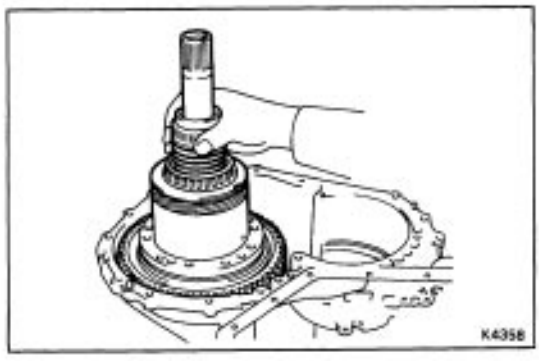

12. CHECK AND ADJUST DIFFERENTIAL SIDE BEARING PRELOAD

(a) Install the differential assembly to the transaxle case.

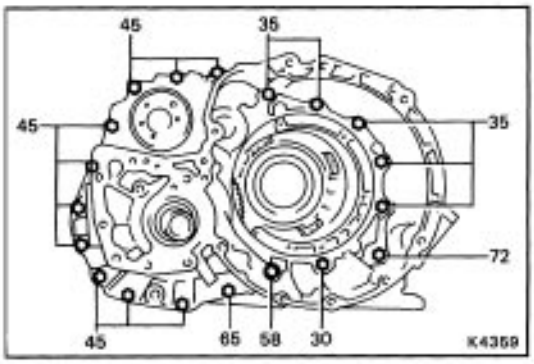

(b) Install the transaxle housing to the transaxle case.
Torque: 300 kg–cm (22 ft–lb, 29 N – m)

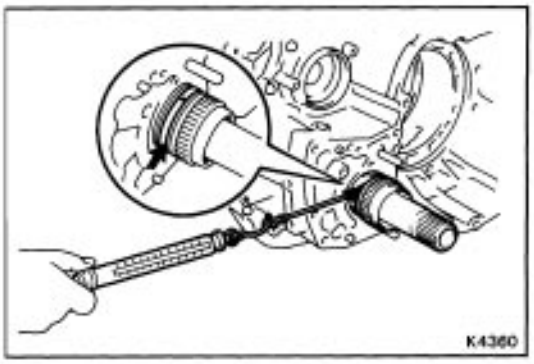

(c) Turn the differential assembly counterclockwise and clockwise several time
(d) Using a spring tension gauge, measure the differential side bearing preload.
Preload (at starting):
New bearing 2.5 – 4.4 kg
(5.5–9.71b,24.5–43.1 N)
Reused bearing 1.3 – 2.2 kg
(2.9 – 4.9 I b, 12.7 – 21.6 N)
If the preload is not within specification, select the thrust washer.

Mark	Thickness mm (in.)	Mark	Thickness mm (in.)	Mark	Thickness mm (in.)
51	2.00 (0.0787)	J	2.24 (0.0882)	61	2.50 (0.0984)
B	2.03 (0.0799)	K	2.27 (0.0894)	62	2.55 (0.1004)
C	2.06 (0.0811)	57	2.30 (0.0906)	63	2.60 (0.1024)
D	2.09 (0.0823)	M	2.33 (0.0917)	64	2.65 (0.1043)
E	2.12 (0.0835)	N	2.36 (0.0929)	65	2.70 (0.1063)
54	2.15 (0.0846)	P	2.39 (0.0941)	66	2.75 (0.1083)
G	2.18 (0.0858)	Q	2.42 (0.0953)	67	2.80 (0.1102)
H	2.21 (0.0870)	60	2.45 (0.0965)	68	2.85 (0.1122)

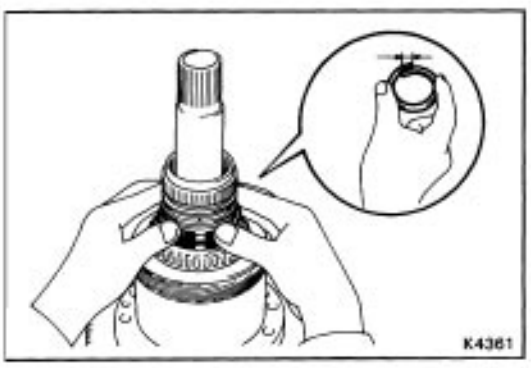

(e) Remove the differential assembly from the transaxle case.

13. INSTALL DIFFERENTIAL OIL SEAL RINGS

Install the two oil seal rings to the ring gear mounting case lower side grooves.

14. INSTALL TRANSMISSION OIL BAFFLE

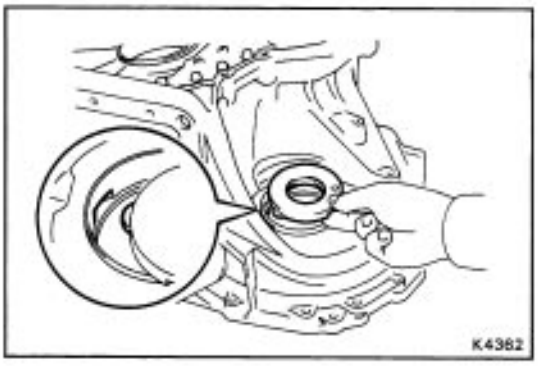

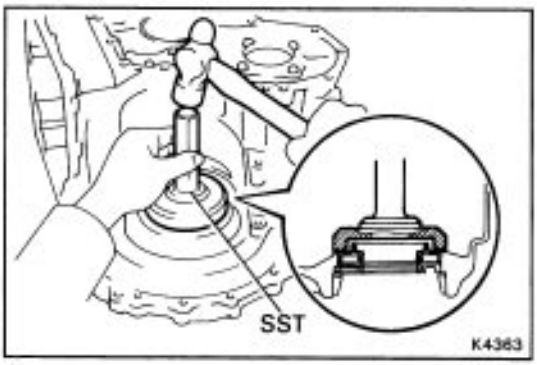

15. INSTALL OIL SEAL

(a) Using SST, drive in a new oil seal to the transaxle case.
SST 09223–15010

(b) Coat the oil seal lip with MP grease.

Transfer (A241H)

COMPONENTS

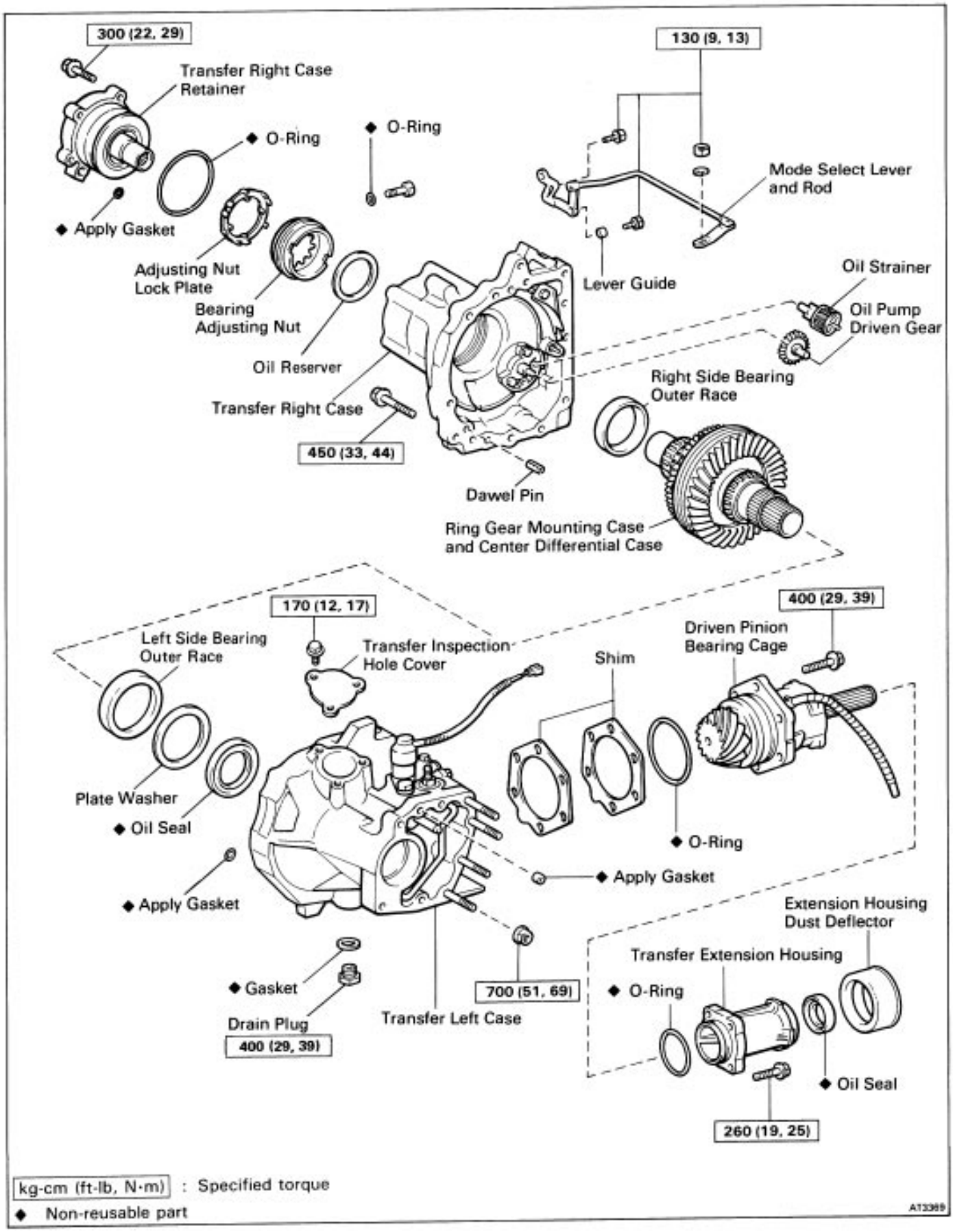

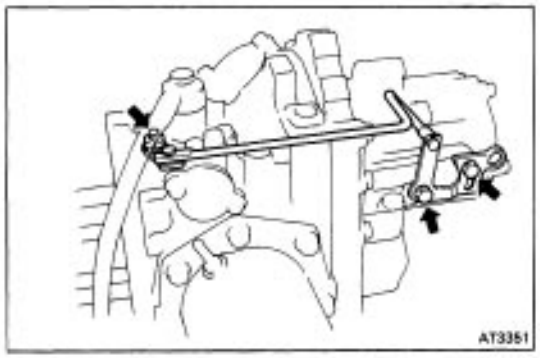

REMOVAL OF COMPONENTS PARTS

1. REMOVE TRANSFER MODE SELECT LEVER AND ROD

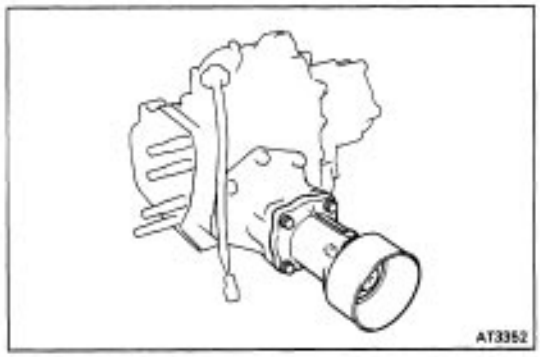

2. REMOVE EXTENSION HOUSING

(a) Remove four bolts and extension housing.
(b) Remove the O–ring from the extension housing.

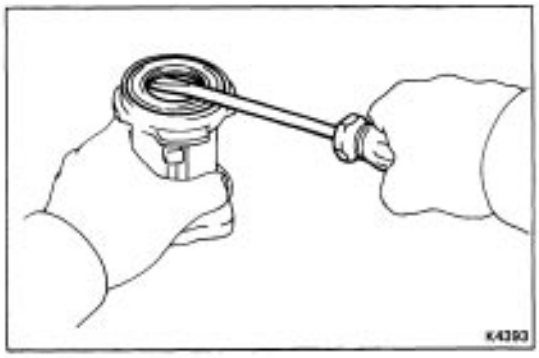

(c) Using a screwdriver, remove the oil seal.

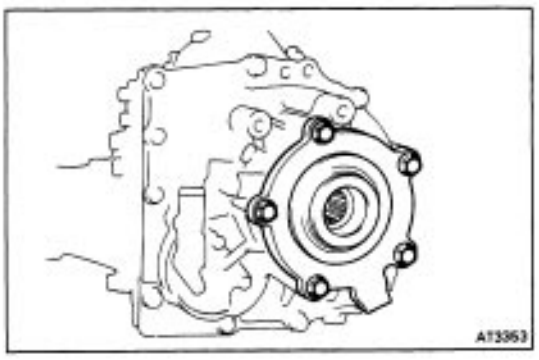

3. REMOVE TRANSFER RIGHT CASE RETAINER

(a) Remove the five bolts.
(b) Using a plastic hammer, remove the right case retainer.

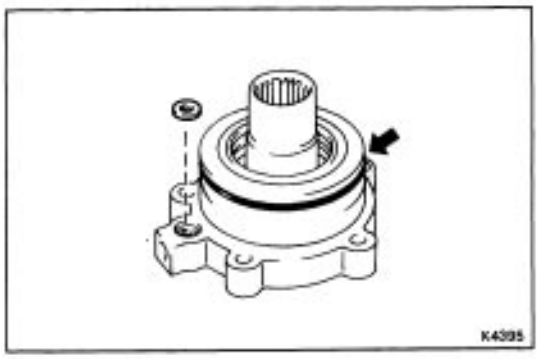

(c) Remove the O–ring and apply gasket from the right case retainer.

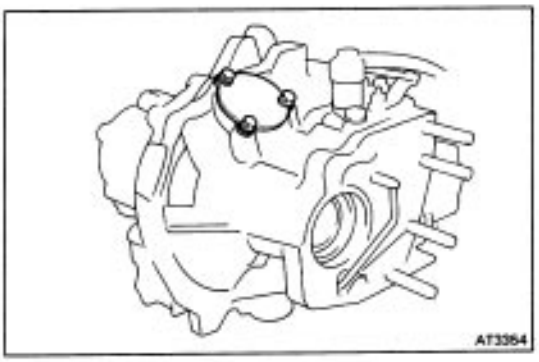

4. REMOVE TRANSFER INSPECTION HOLE COVER

Remove the three bolts and inspection hole cover.

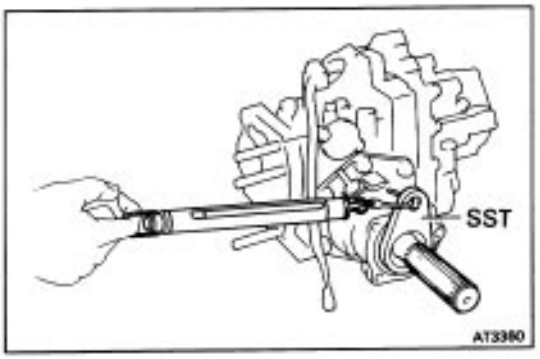

5. CHECK PRELOAD

(a) Using SST and a spring tension gauge, measure the driven pinion preload of the backlash between the driven pinion and ring gear.
SST 09326–20011

Driven pinion preload (at starting):
0.9–1.4kg(2.0–3.11b,8.8–13.7N)

(b) Using SST and a spring tension gauge, measure the total preload.
SST 09326–20011

Total preload (at starting):
Add driven pinion preload
0.5–0.9kg(1.1 –2.0lb,4.9–8.8N)

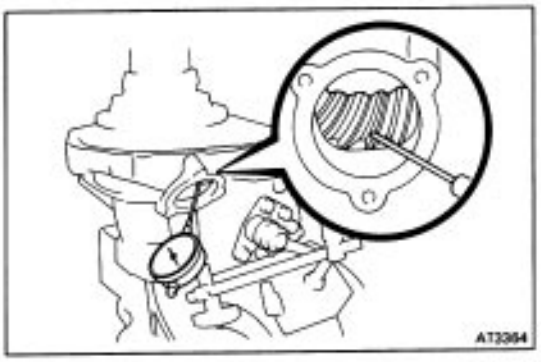

6. CHECK RING GEAR BACKLASH

Using a dial indicator, measure the ring gear backlash.
Backlash: 0.13 – 0.18 mm (0.0051 – 0.0071 in.)

7. CHECK TOOTH CONTACT

(See pages AT–267**, 268)**

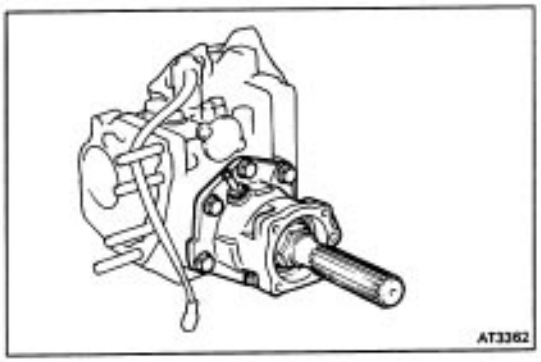

8. REMOVE DRIVEN PINION BEARING CAGE

(a) Remove the six bolts.
(b) Using a plastic hammer, remove the bearing cage.
(c) Remove the O–ring and the shims from the bearing cage.

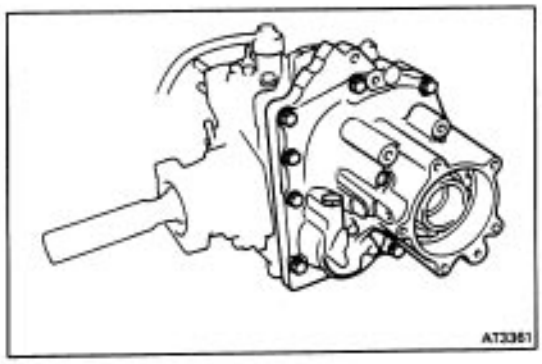

9. REMOVE TRANSFER RIGHT CASE

Remove the ten bolts and right case.

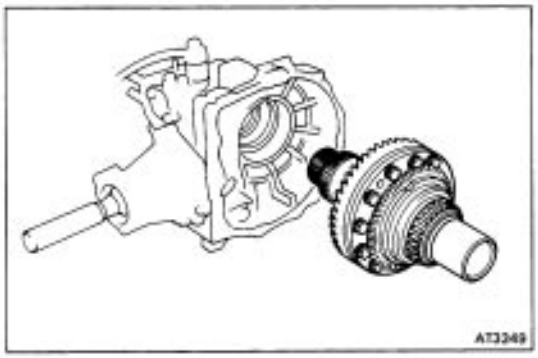

10. REMOVE CENTER DIFFERENTIAL ASSEMBLY

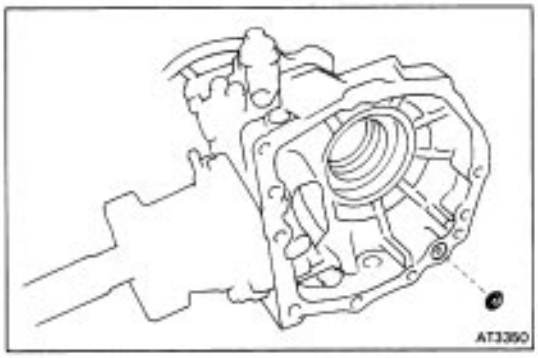

11. REMOVE APPLY GASKET

Remove the apply gasket from the left case.

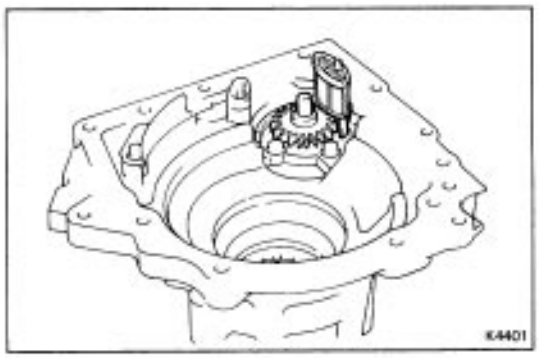

12. REMOVE OIL PUMP STRAINER AND OIL PUMP DRIVEN GEAR

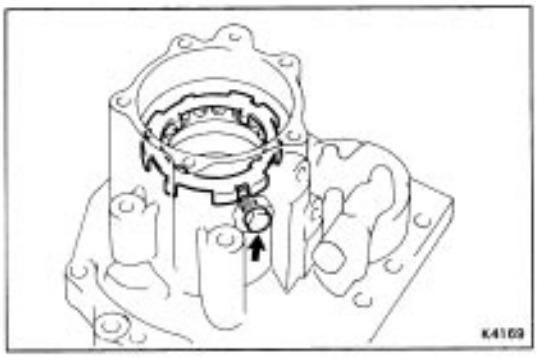

13. REMOVE ADJUSTING NUT LOCK PLATE

(a) Remove the bolt and nut lock plate from the right case.

(b) Remove the O–ring from the bolt.

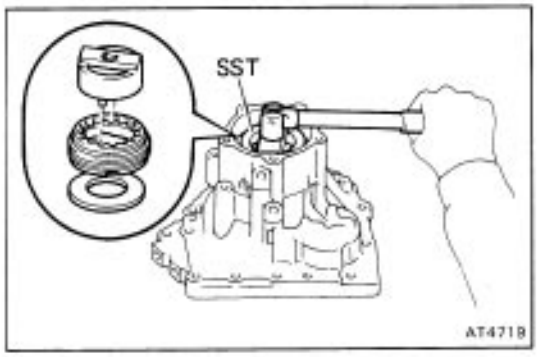

14. REMOVE DIFFERENTIAL RIGHT SIDE BEARING OUTER RACE

Using SST, remove the adjusting nut and an oil reservoir from the right case.

SST 09318–12010

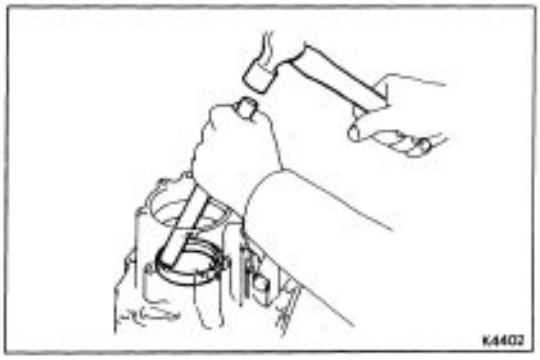

(b) Using a brass bar, remove the outer race.

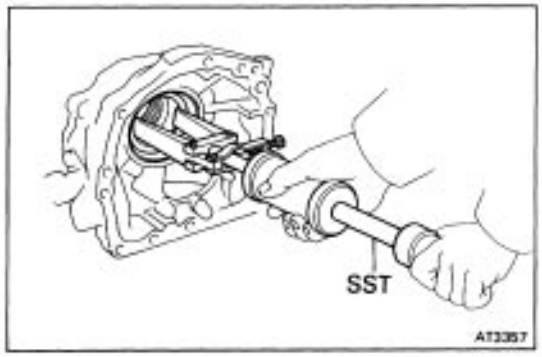

15. REMOVE DIFFERENTIAL LEFT SIDE BEARING OUTER RACE

Using SST, remove the outer race and washer.
SST 09308–00010

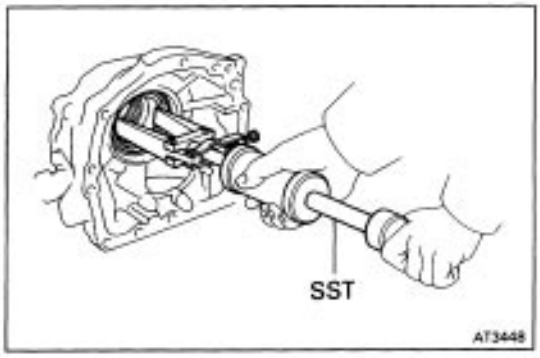

16. REMOVE LEFT CASE OIL SEAL

Using SST, remove the oil seal.
SST 09308–00010

(Driven Pinion Bearing Cage)

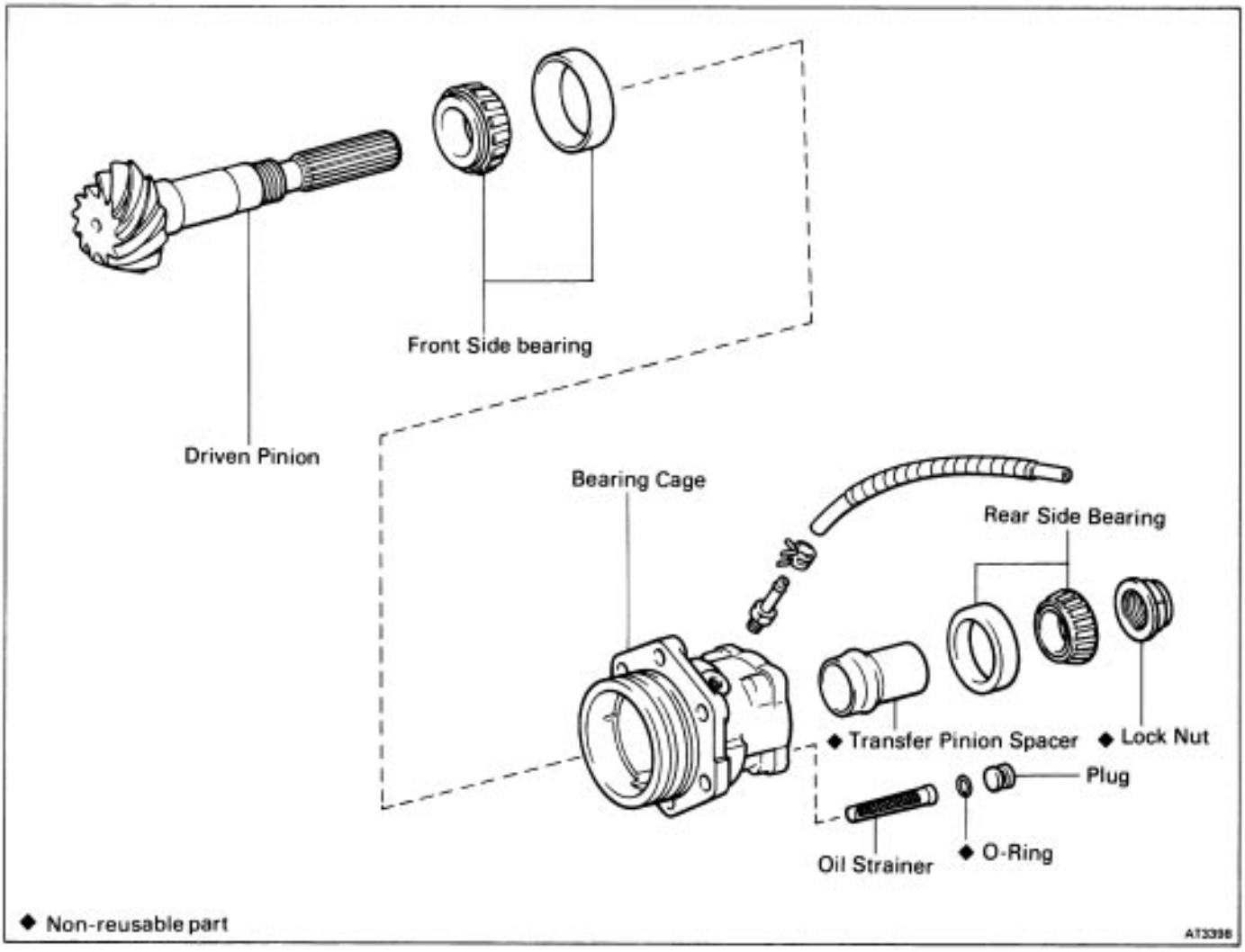

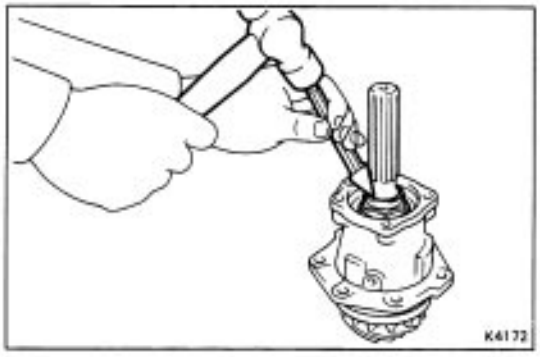

DISASSEMBLY OF DRIVEN PINION BEARING CAGE

1. REMOVE LOCK NUT

(a) Using a chisel and hammer, unstake the lock nut.

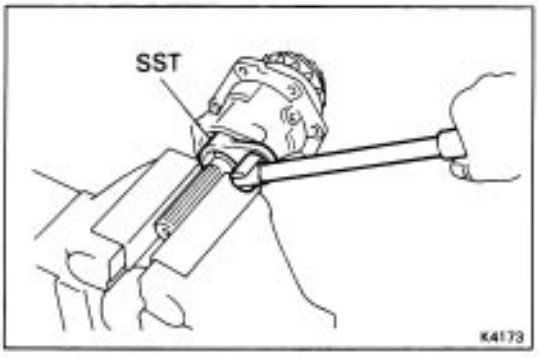

(b) Using SST, remove the lock nut.

SST 09326–20011

NOTICE: Using the soft jaws, hold the drive pinion in a vise.

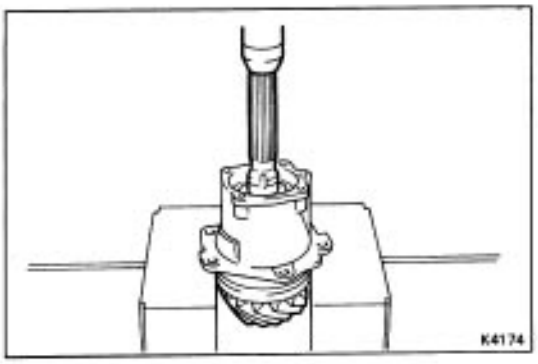

2. REMOVE DRIVEN PINION

Using a press, remove the driven pinion, rear side bearing and spacer.

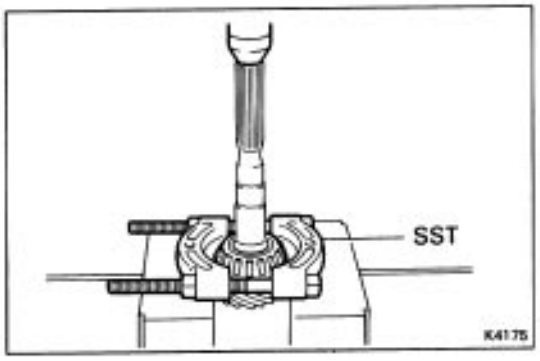

3. REMOVE FRONT SIDE BEARING

Using a press and SST, remove the front side bearing.
SST 09950–00020

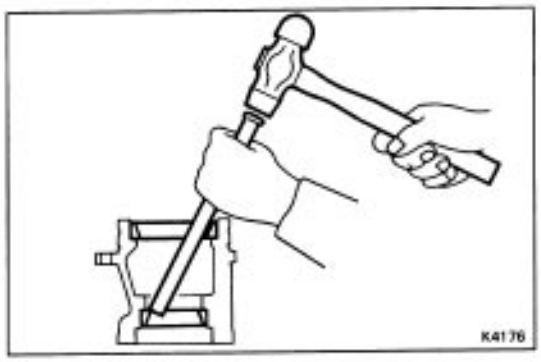

4. REMOVE BEARING OUTER RACES

Using a brass bar and hammer, remove the two bearing outer races.

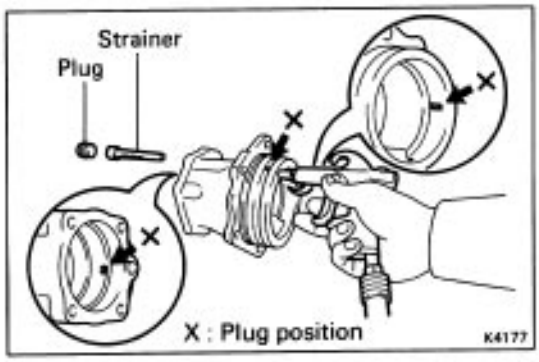

5. REMOVE OIL STRAINER

(a) Using low pressure air, remove the plug and oil strainer.
(b) Remove the O–ring from the plug.

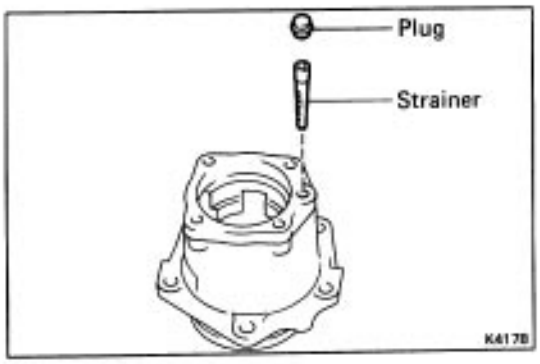

ASSEMBLY OF DRIVEN PINION BEARING CAGE

1. INSTALL OIL STRAINER

(a) Apply ATF to a new O–ring.
(b) Install a new O–ring to the plug.
(e) Install the oil strainer and plug.

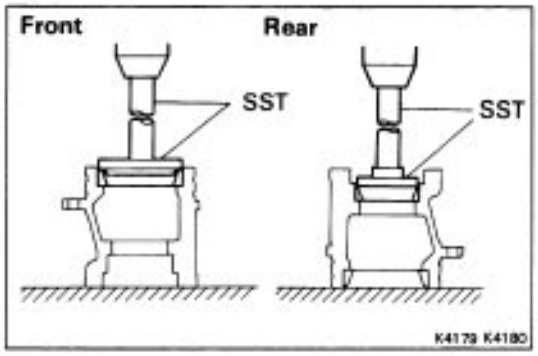

2. INSTALL BEARING OUTER RACES

Using a press and SST,, install the two bearing outer races to the bearing cage.

SST

Front side:
09608–35014 (09608–06020, 09608–06120)
Rear side:
09608–30022 (09608–05010,09608–00050)

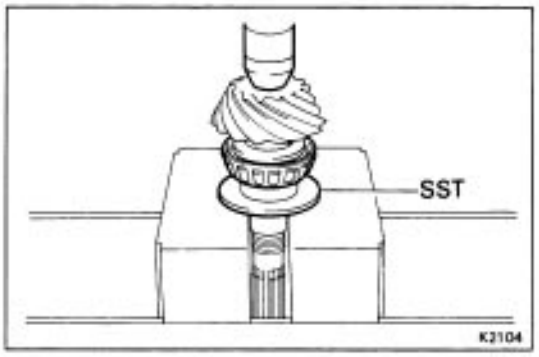

3. INSTALL DRIVEN PINION FRONT SIDE BEARING

Using a press and SST, install the front side bearing.

SST 09506–35010

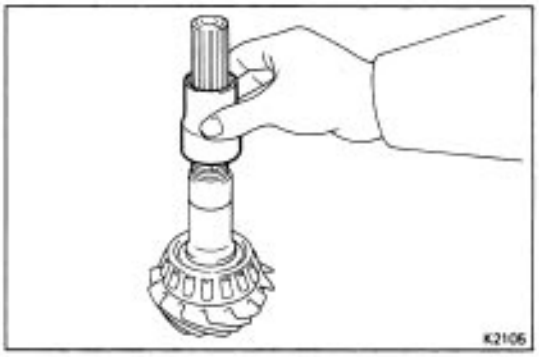

4. INSTALL SPACER

Install a new spacer to the driven pinion.

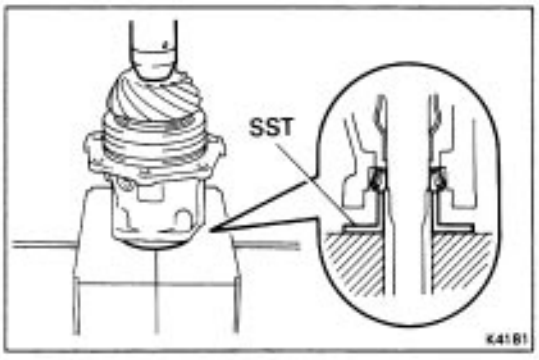

5. INSTALL DRIVEN PINION REAR SIDE BEARING

(a) Install the bearing cage to the driven pinion.

(b) Using a press and SST, install the rear side bearing to the driven pinion.

SST 09506–35010

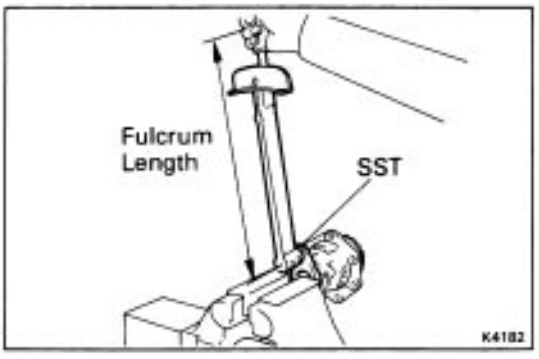

6. ADJUST DRIVEN PINION PRELOAD

(a) Using SST, torque a new nut.

SST 09326–20011

Torque: 1,000 kg–cm (72 ft–lb, 9 N– m)

HINT: Use a torque wrench with a fulcrum length of 50 cm (19.69 in.).

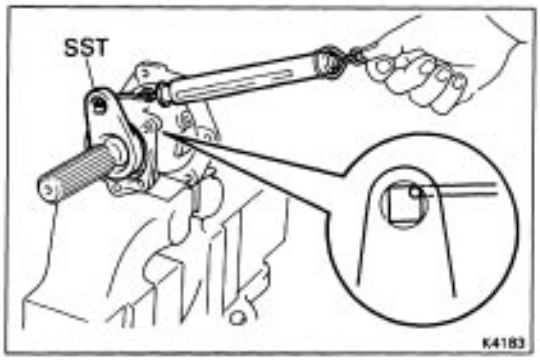

(b) Using a spring tension gauge and SST, measure the preload.

SST 09326–20011

HINT: Turn the driven pinion right and left two or three times to allow the bearings to settle.

Preload (at starting):

New bearing

1.8–2.9kg(4.0–6.41b,17.7–28.4N)

Reused bearing

0.9–1.4kg(2.0–3.11b,8.8–13.7N)

- If preload is greater than specification, replace the bearing spacer.
- If preload is less than specification, retighten the nut 5 10˚ at a time until the specified preload is rechecked.

If the maximum torque is exceed while retightening the nut, replace the bearing spacer and repeat the preload procedure.

Do not back off the pinion nut to reduce the preload.

Maximum torque: 2,200 kg–cm (159 ft–lb, 216 N–m)

NOTICE: Using the soft jaws, hold the bearing cage in a vise.

7. STAKE LOCK NUT

Using a punch and hammer, stake the nut.

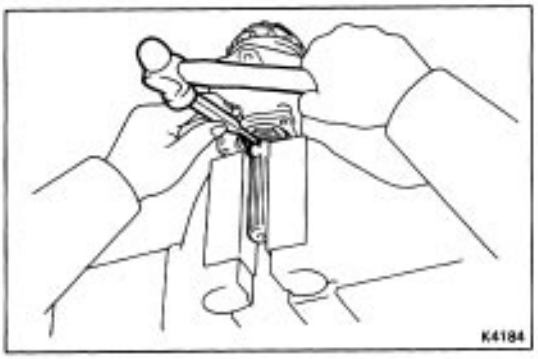

(Transfer Right Case Retainer)

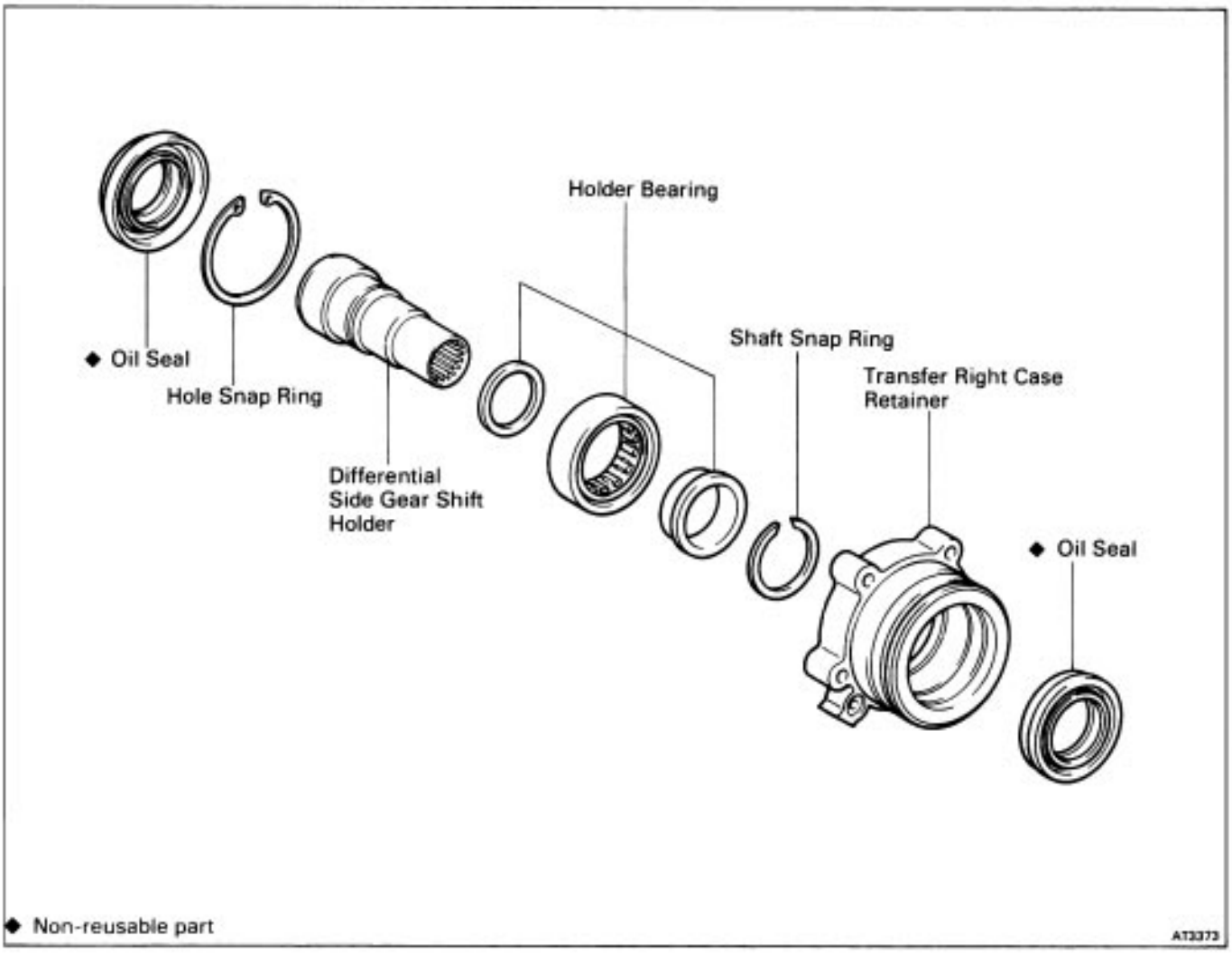

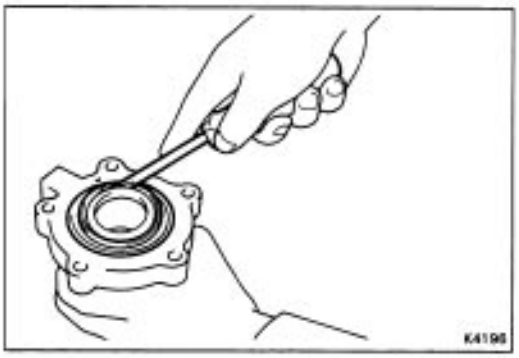

DISASSEMBLY OF TRANSFER RIGHT CASE RETAINER

1. REMOVE OIL SEAL

Using a screwdriver, remove the oil seal.

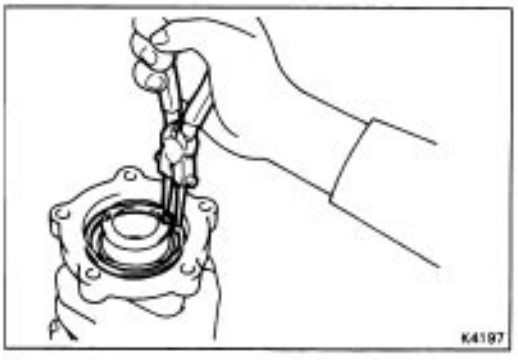

2. REMOVE SIDE GEAR SHAFT HOLDER

(a) Using a snap ring pliers, remove the snap ring.

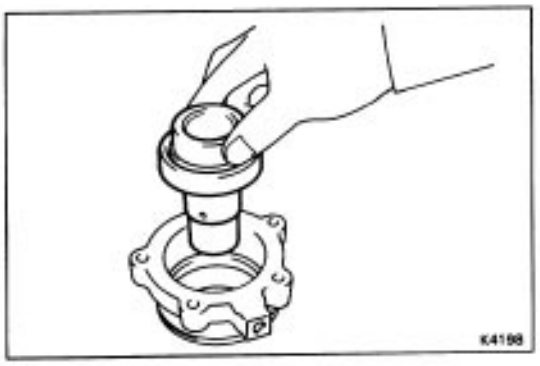

(b) Remove the side gear shaft holder.

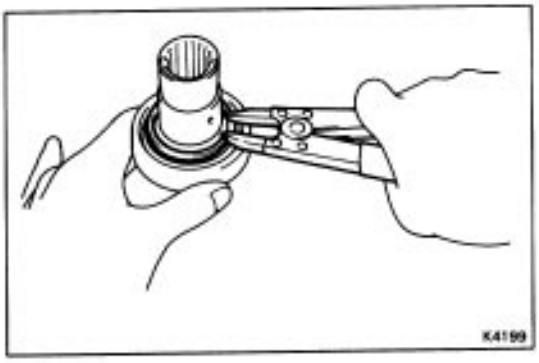

3. REMOVE HOLDER BEARING

(a) Using snap ring pliers, remove the snap ring.

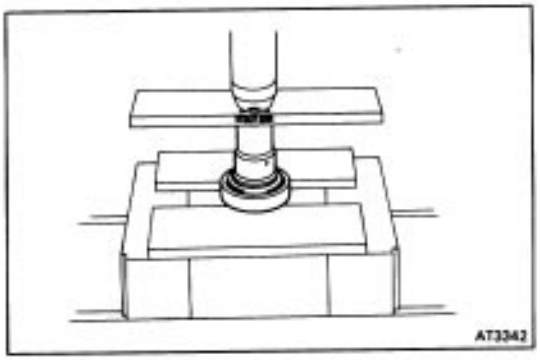

(b) Using a press, press out the bearing.

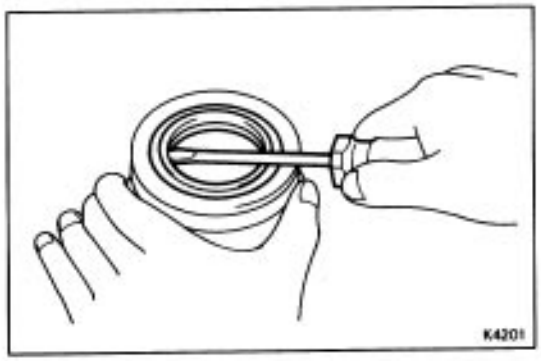

4. REMOVE OIL SEAL

Using a screwdriver, remove the oil seal.

ASSEMBLY OF TRANSFER RIGHT CASE RETAINER

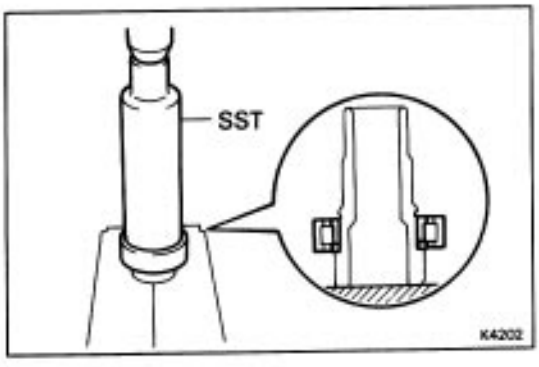

1. INSTALL HOLDER BEARING

(a) Using SST and a press, press in the holder bearing.

SST 09226–10010

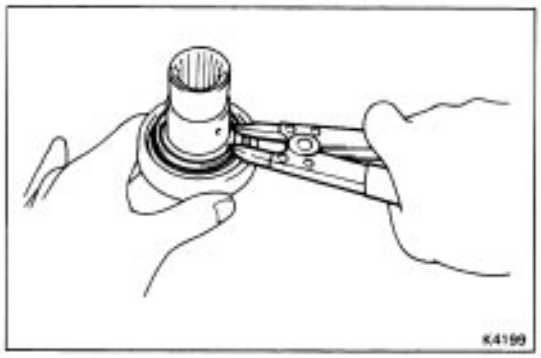

(b) Using snap ring pliers, install the snap ring.

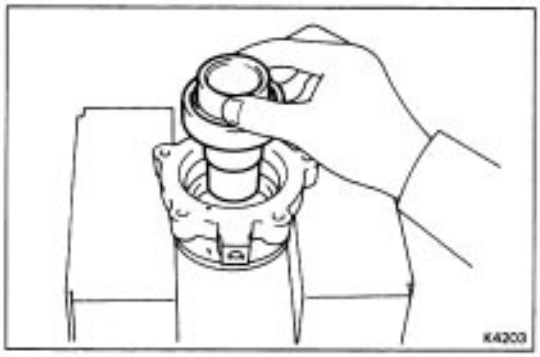

2. INSTALL SIDE GEAR SHAFT HOLDER

(a) install the side gear shaft holder.

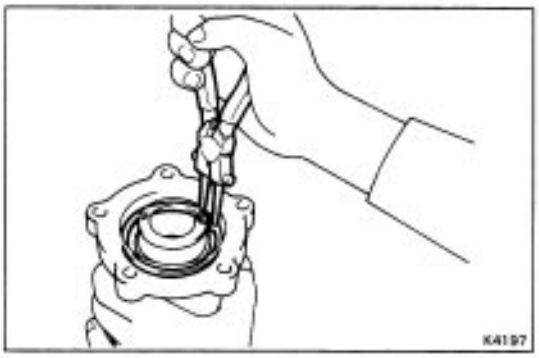

(b) Using snap ring pliers, install the snap ring.

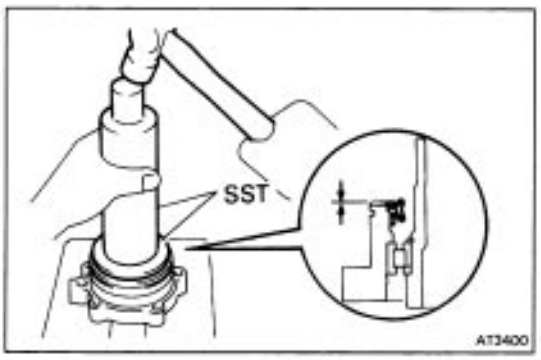

3. INSTALL OIL SEAL

(Left side oil seal)

(a) Coat a new oil seal lip with MP grease.

(b) Using a hammer and SST, drive in a oil seal.

SST 09316–60010 (09316–00010,09316–00040)

Oil seal depth: 0 mm (0 in.)

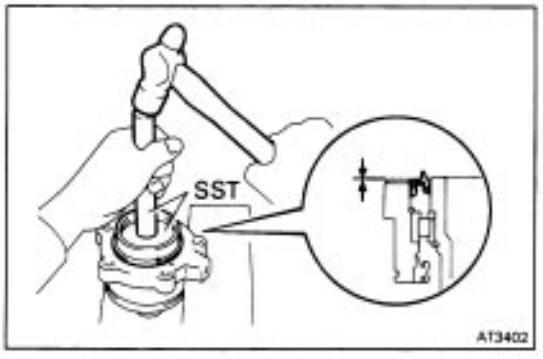

(Right side oil seal)

(a) Coat a new oil seal lip with MP grease.

(b) Using a hammer and SST, drive in a oil seal.

SST 09608–32010,09608–35014 (09608–06020)

Oil seal depth: 0 mm (0 in.)

(Transfer Right Case)

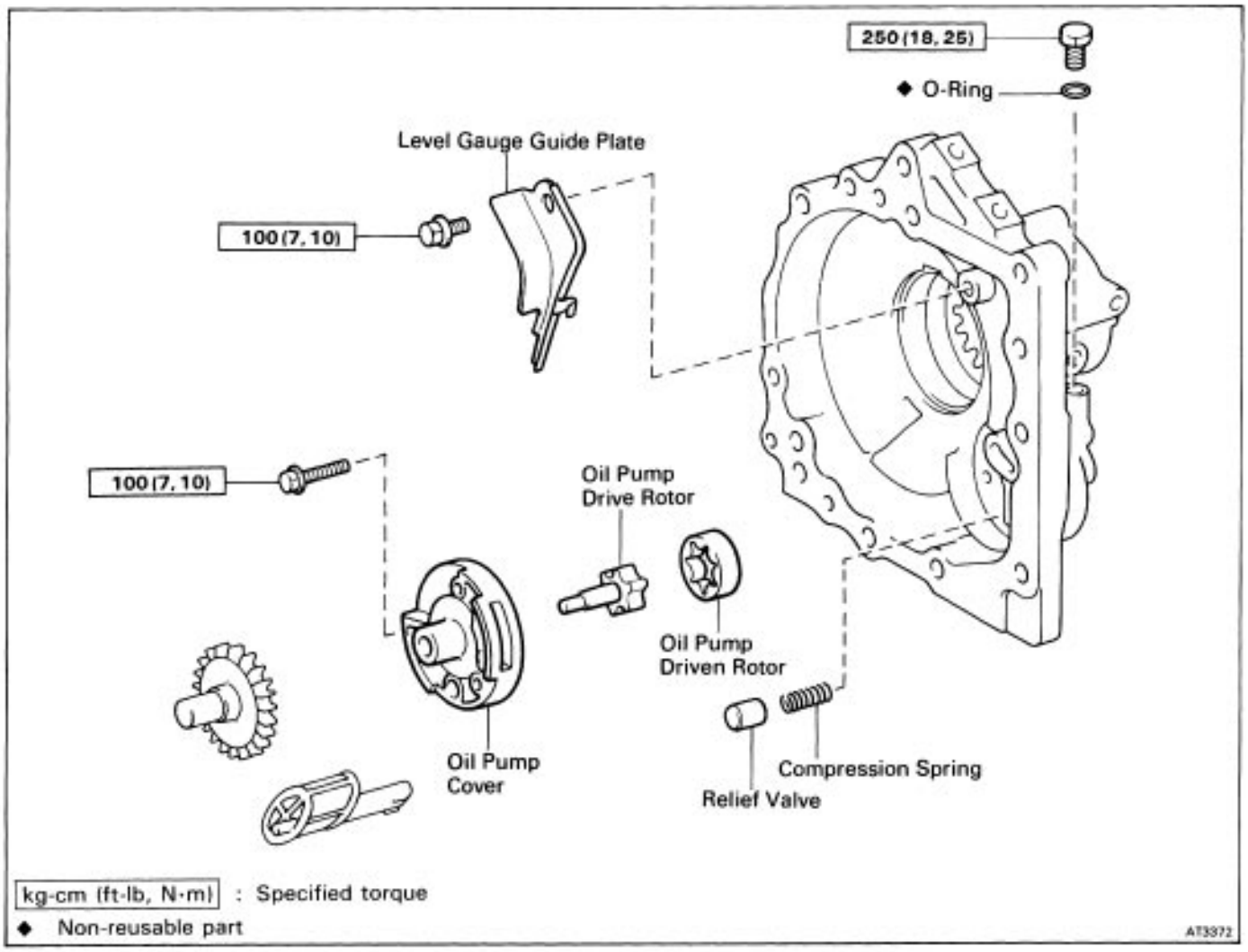

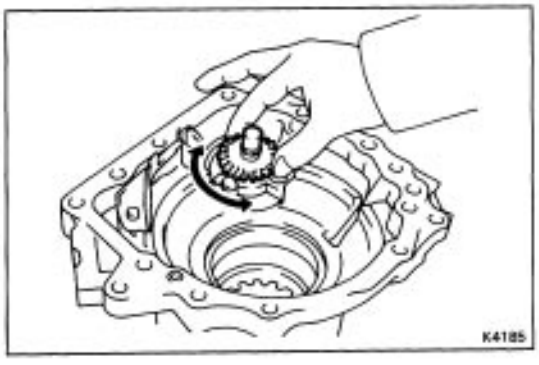

DISASSEMBLY TRANSFER RIGHT CASE

1. INSPECT OIL PUMP OPERATION

Check that the oil pump turns smoothly with oil pump driven gear.

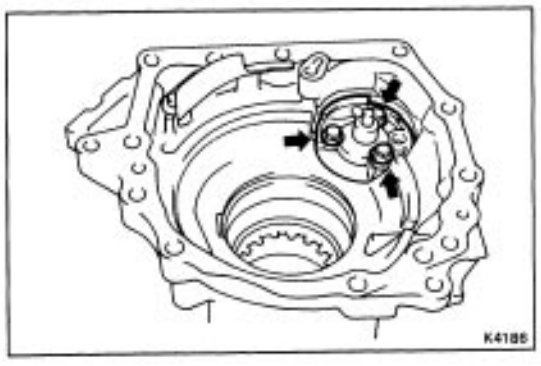

2. REMOVE OIL PUMP COVER

Remove the three bolts and cover.

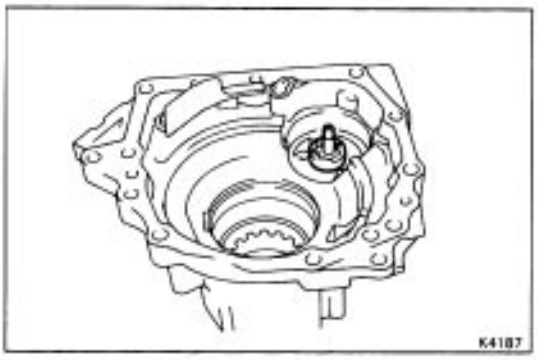

3. REMOVE OIL PUMP DRIVE ROTOR AND DRIVEN ROTOR

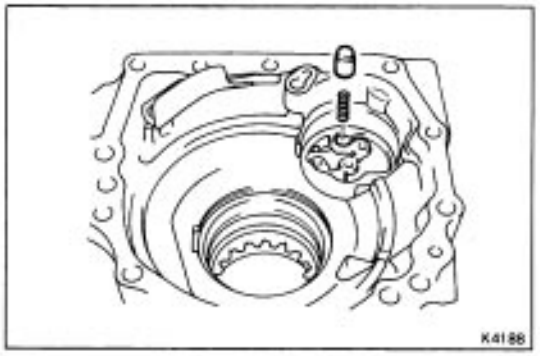

4. REMOVE RELIEF VALVE

Remove the relief valve and a spring.

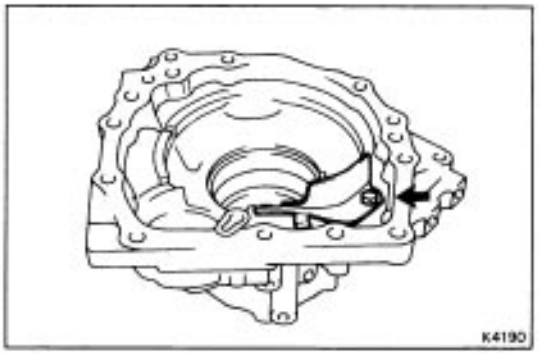

5. REMOVE LEVEL GAUGE GUIDE PLATE

ASSEMBLY OF TRANSFER RIGHT CASE

1. INSTALL LEVEL GAUGE GUIDE PLATE

Torque: 100 kg–cm (7 ft–lb, 10 N–m)

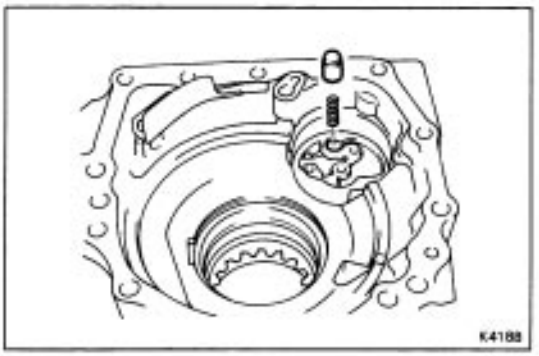

2. INSTALL RELIEF VALVE

Install the relief valve and a spring.

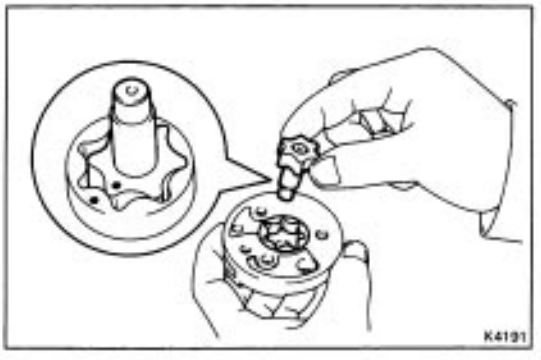

3. INSTALL OIL PUMP DRIVE ROTOR AND DRIVEN ROTOR

Align the matchmarks on the drive rotor and the driven rotor.

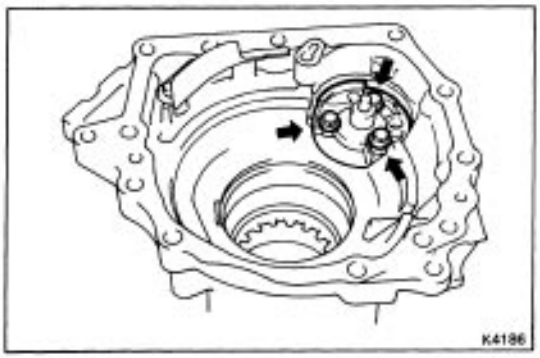

4. INSTALL OIL PUMP COVER

Torque the three bolts evenly.

Torque: 100 kg–cm (7 ft–lb, 10 N–m)

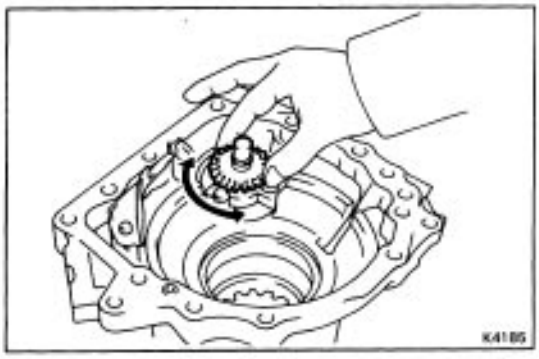

5. CHECK OPERATION OF OIL PUMP

Insert the oil pump driven gear to the drive rotor, check that the drive rotor turns smoothly.

(Ring Gear Mounting Case and Center Differential Case)

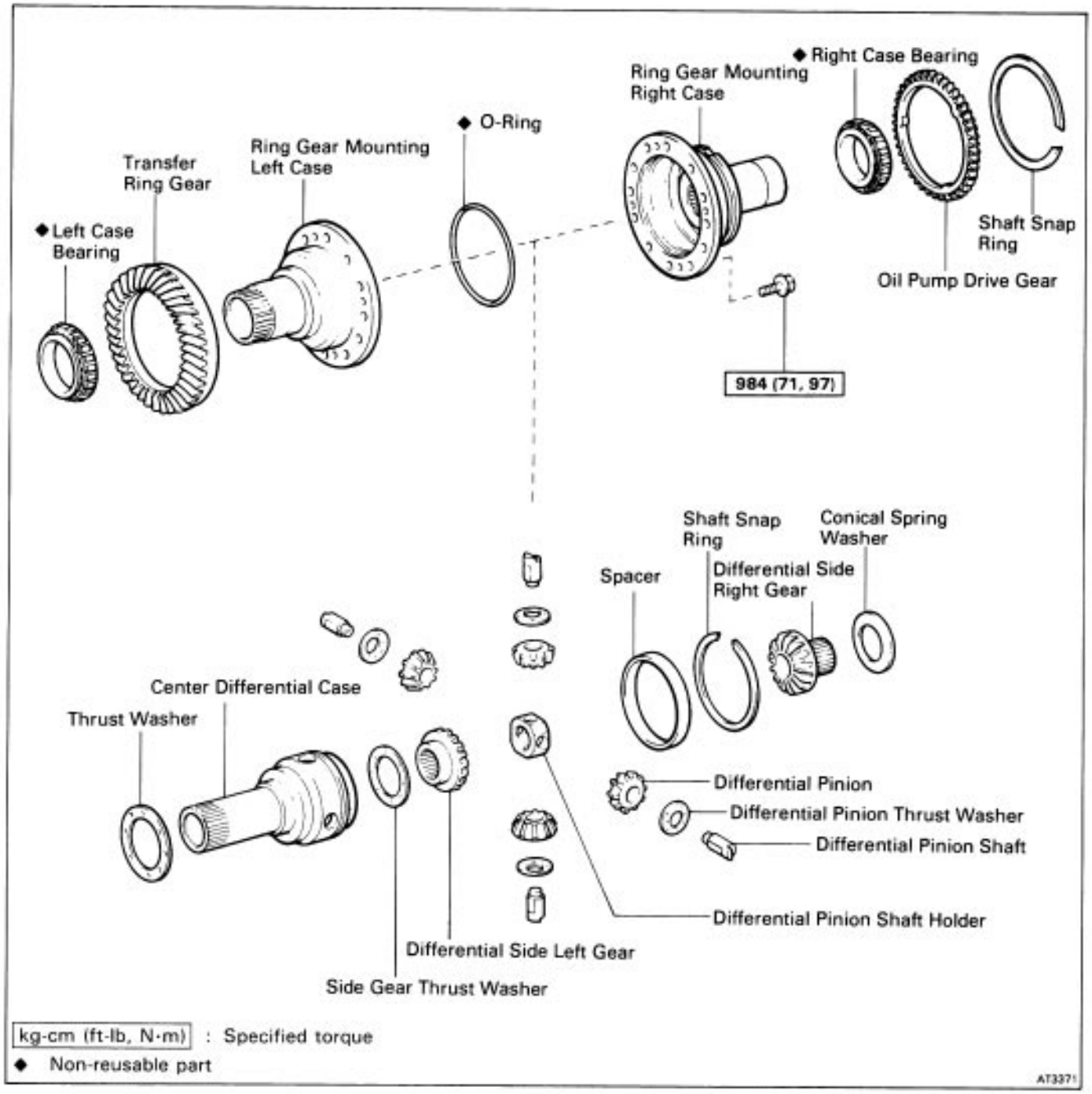

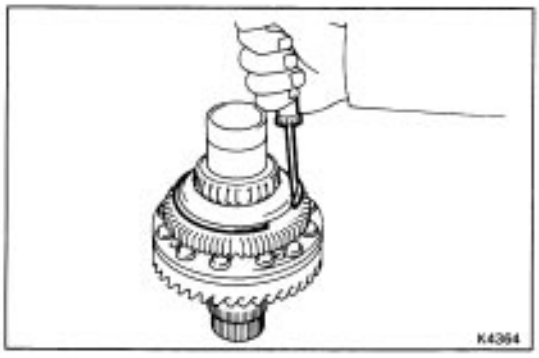

DISASSEMBLY OF RING GEAR MOUNTING CASE AND CENTER DIFFERENTIAL CASE

1. REMOVE OIL PUMP DRIVE GEAR

(a) Using a screwdriver, remove the shaft snap ring.

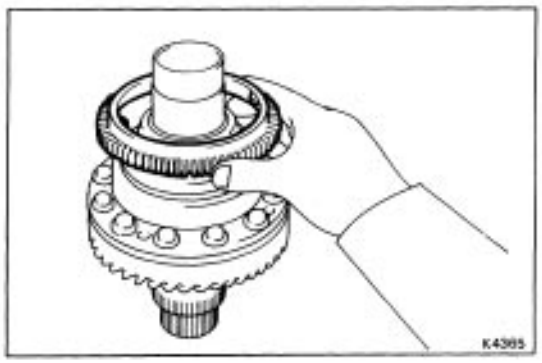

(b) Remove oil pump drive gear.

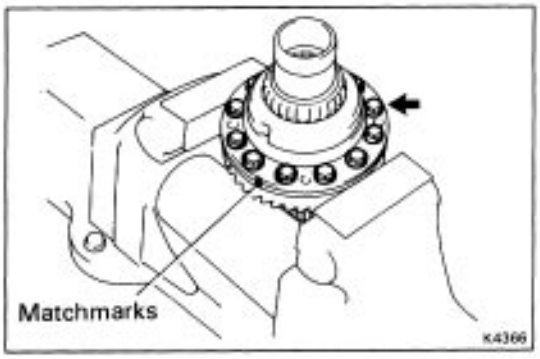

2. REMOVE RING GEAR MOUNTING LEFT CASE

(a) Place the matchmarks on the differential left case and the differential right case.

NOTICE: Using the soft jaws, hold the left case in a vise.

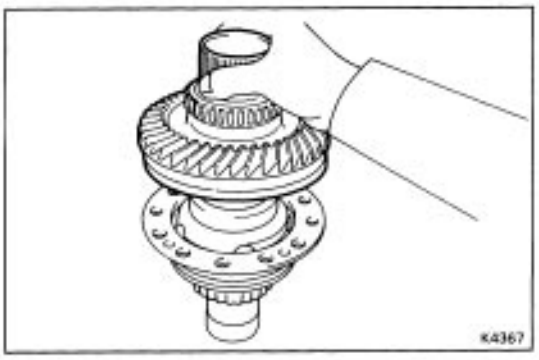

(b) Remove the twelve bolts.

(c) Remove the differential left case up–ward.

(d) Remove the O–ring from the left case.

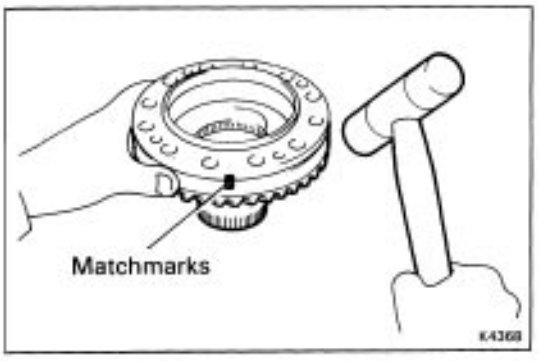

3. REMOVE RING GEAR

(a) Place the matchmarks on the differential left case and ring gear.

(b) Using a plastic hammer, tap out the ring gear.

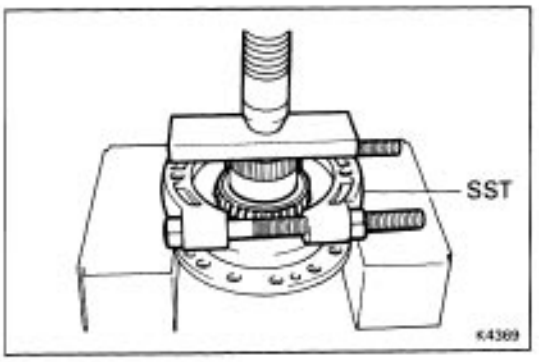

4. REMOVE LEFT CASE BEARING

Using SST and a press, press out the bearing.

SST 09950–00020

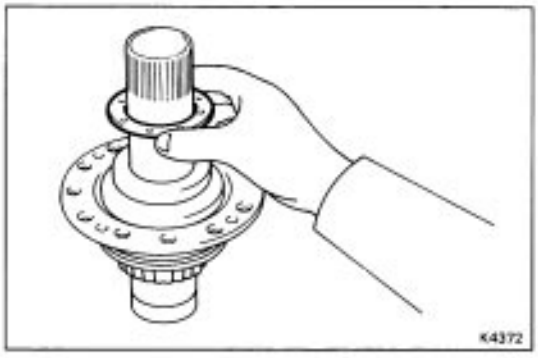

5. REMOVE THRUST WASHER

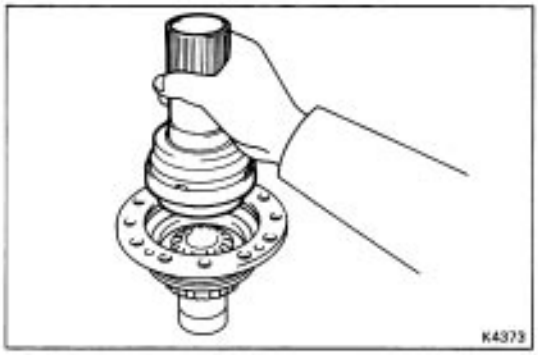

6. REMOVE CENTER DIFFERENTIAL CASE ASSEMBLY

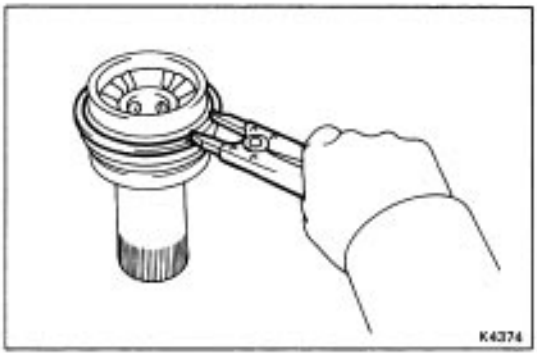

7. DISASSEMBLE CENTER DIFFERENTIAL CASE

(a) Using snap ring pliers, remove the shaft snap ring.

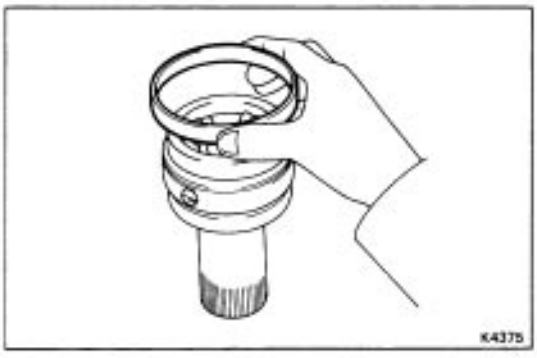

(b) Remove the spacer.



(c) Remove following parts from the center differential case.

- Four pinion shafts
- Pinion shaft holder
- Four differential pinions
- Four pinion thrust washers
- Differential side left gear
- Side gear thrust washer

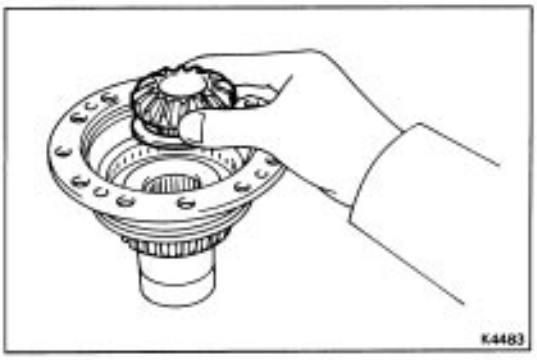

8. REMOVE DIFFERENTIAL SIDE RIGHT GEAR AND CONICAL SPRING WASHER

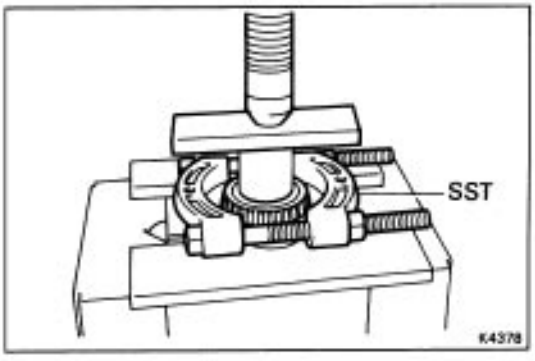

9. REMOVE RIGHT CASE BEARING

Using SST and a press, press out the bearing.
SST 09950–00020

ASSEMBLY OF RING GEAR MOUNTING CASE AND CENTER DIFFERENTIAL CASE

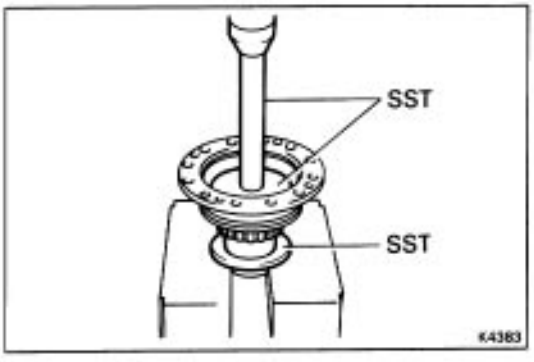

1. INSTALL RIGHT CASE BEARING

Using SST and a press, press in the bearing.
SST 09316–20011, 09608–35014
(09608–06020,09608–06120)

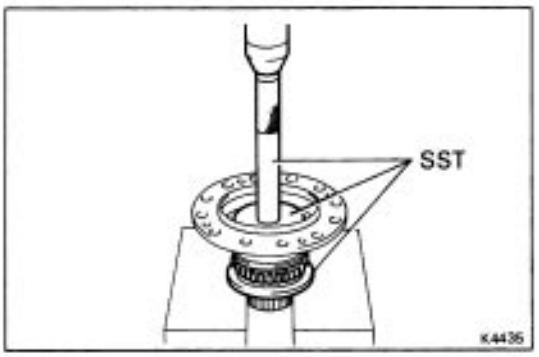

2. INSTALL LEFT CASE BEARING

Using SST and a press, press in the left case.
SST 09316–12010, 09608–35014
(09608–06020,09608–06120)

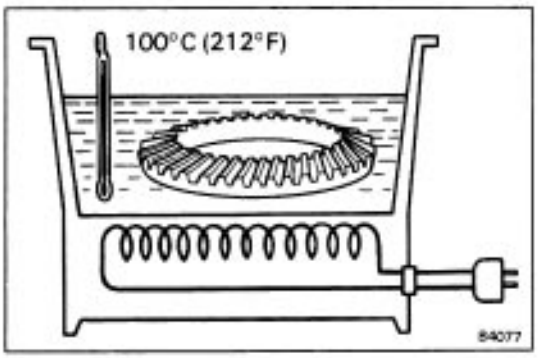

3. INSTALL RING GEAR

(a) Clean the contact surface of the ring gear mounting left case.

(b) Heat the ring gear to* about 100˚C (212˚F) in an oil bath.

NOTICE: Do not heat the ring gear above 110˚C (230˚F).

(c) Clean the contact surface of the ring gear with cleaning solvent.

(d) Align the matchmarks and quickly install the ring gear on the ring gear mounting left case.

4. CHECK AND ADJUST CENTER DIFFERENTIAL SIDE GEAR BACKLASH

(a) Install following parts to the center differential case.

- Side gear thrust washer
- Differential side left gear
- Four pinion thrust washers
- Four differential pinions
- Pinion shaft holder
- Four pinion shafts



(b) Install spacer toward to as shown.

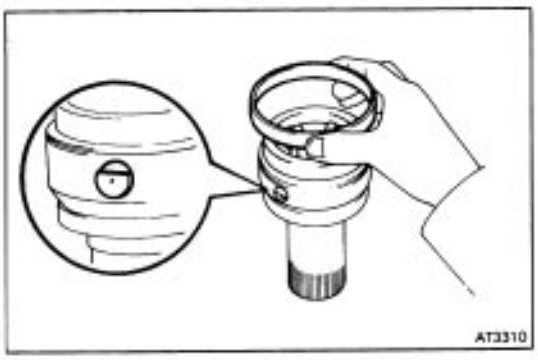

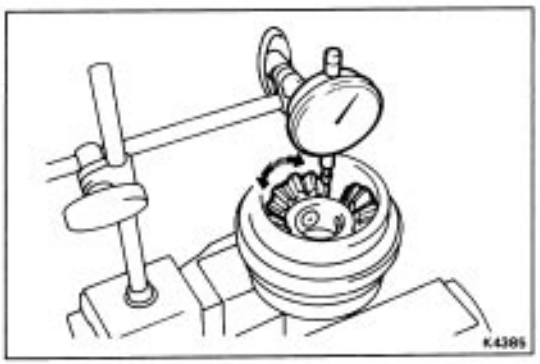

(c) Using a dial indicator, measure the backlash of one pinion gear while holding the side gear toward the case.

Standard backlash: 0.06 – 0.22 mm (0.0024 – 0.0087 in.)

HINT: Do not mount the surface of center differential case which contacts with bushing in a vise.

Referring to the table bellow, select the thrust washer which will ensure that the backlash is within specification.

Try to select a washer of the same size.

Mark	Thickness mm (in.)	Mark	Thickness mm (in.)
A	1.00 (0.0394)	F	1.25 (0.0492)
B	1.05 (0.0413)	G	1.30 (0.0512)
C	1.10 (0.0433)	H	1.35 (0.0531)
D	1.15 (0.0453)	J	1.40 (0.0551)
E	1.20 (0.0472)		

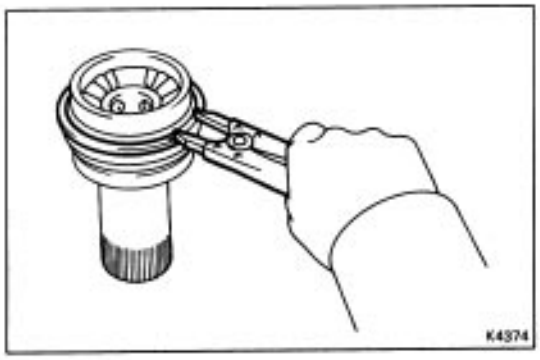

(d) Using snap ring pliers, install the shaft snap ring.

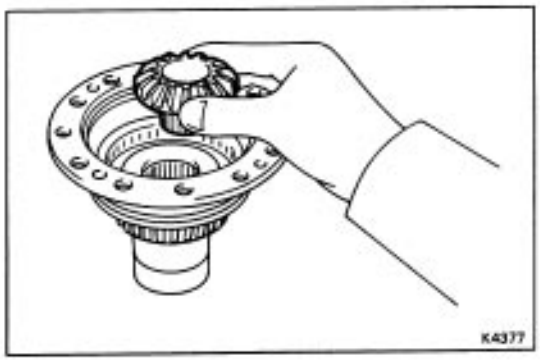

5. CHECK AND ADJUST CENTER DIFFERENTIAL SIDE GEAR THRUST CLEARANCE

(a) Install differential side right gear.

HINT: Do not install the conical spring washer.

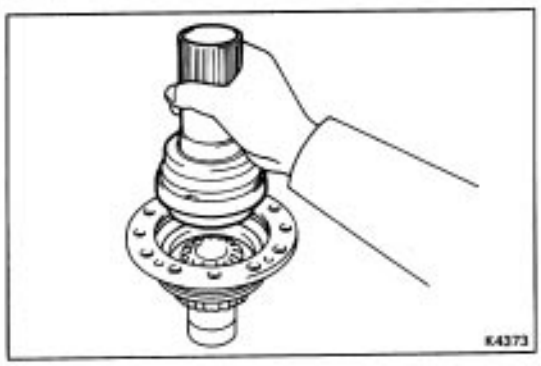

(b) Install center differential case.

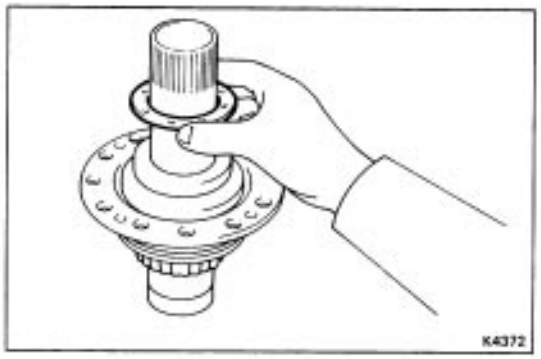

(c) Install the thrust washer.

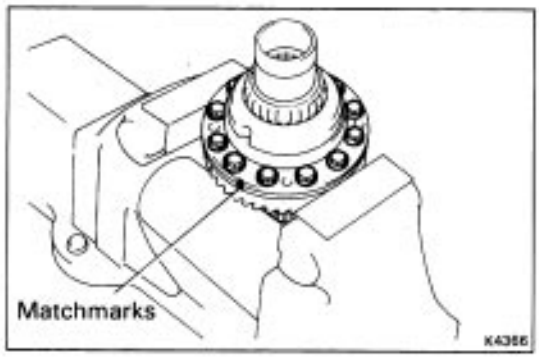

(d) Align the matchmarks on ring gear mounting left and right case.

(e) Install and torque the twelve bolts.

Torque: 984 kg–cm (71 ft–lb, 97 N–m)

HINT: Do not install the O–ring.

(f) Using a caliper, measure the conical spring washer thickness.

Using a dial indicator, measure the thrust clearance of center differential case while holding the ring gear mounting case.

Standard clearance:

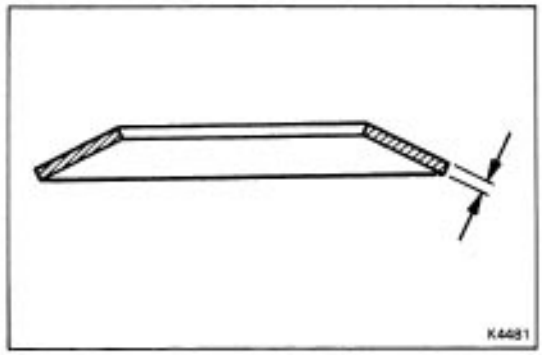

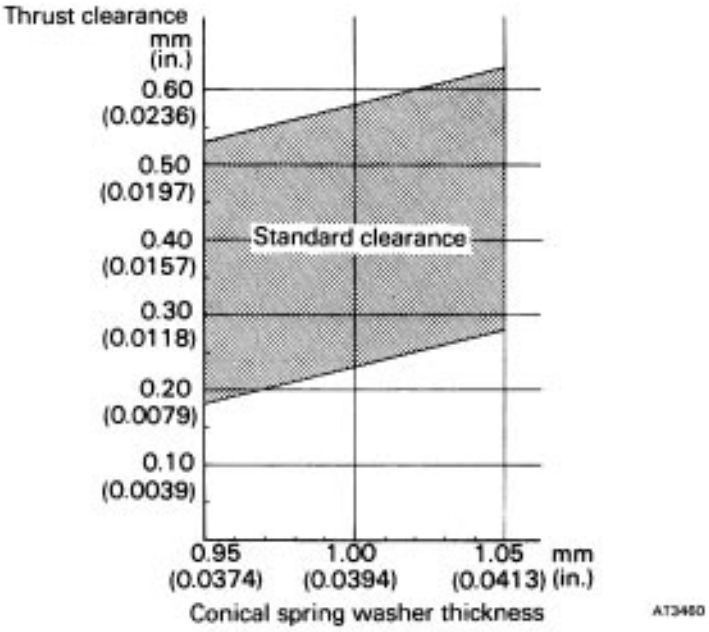

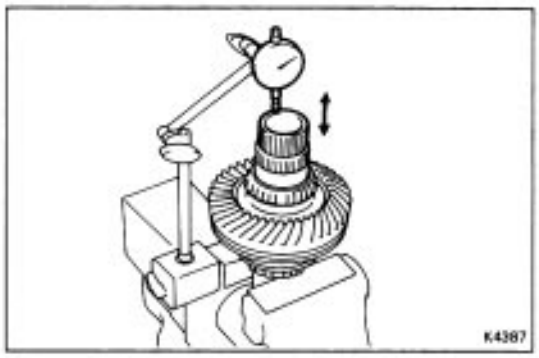

(h) Referring to the table bellow, select the thrust washer which will ensure that the backlash is within specification. Try to select a washer of the same size.

Mark	Thickness mm (in.)	Mark	Thickness mm (in.)
A	1.00 (0.0394)	G	1.30 (0.0512)
B	1.05 (0.0413)	H	1.35 (0.0531)
C	1.10 (0.0433)	J	1.40 (0.0551)
D	1.15 (0.0453)	K	1.45 (0.0571)
E	1.20 (0.0472)	L	1.50 (0.0591)
F	1.25 (0.0492)		

Remove ring gear mounting right case.

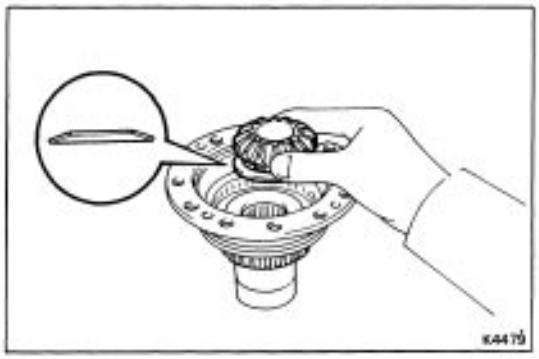

6. INSTALL DIFFERENTIAL SIDE GEAR AND CONICAL SPRING WASHER

HINT: Be careful not to mistake the direction of conical spring washer.

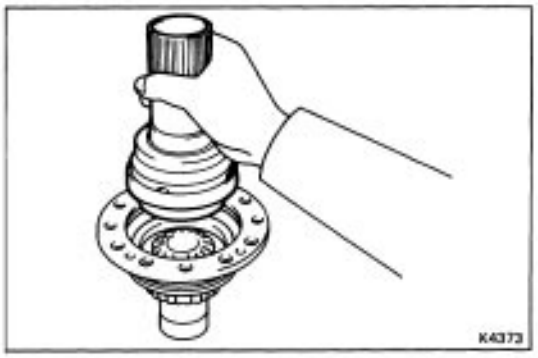

7. INSTALL CENTER DIFFERENTIAL CASE

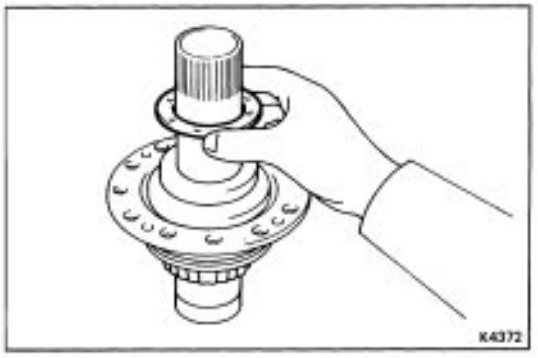

8. INSTALL THRUST WASHER (Previously selected)

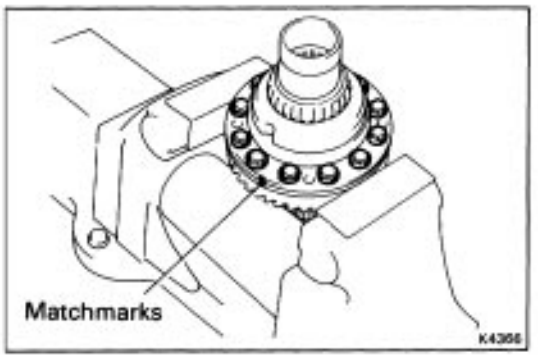

9. INSTALL RING GEAR MOUNTING LEFT CASE

(a) Coat the new O–ring with ATF, and install it onto the left case.

(b) Align the matchmarks on the right and left case.

(c) Install and torque the twelve bolts.

Torque: 984 kg–cm (71 ft–lb, 97 N–m)

NOTICE: Using the soft jaws, hold the left case in a vise.

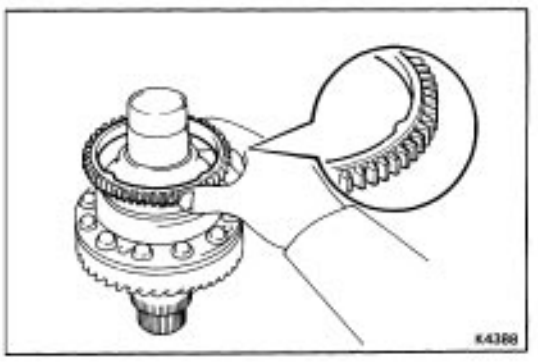

10. INSTALL OIL PUMP DRIVE GEAR

(a) Install oil pump drive gear.

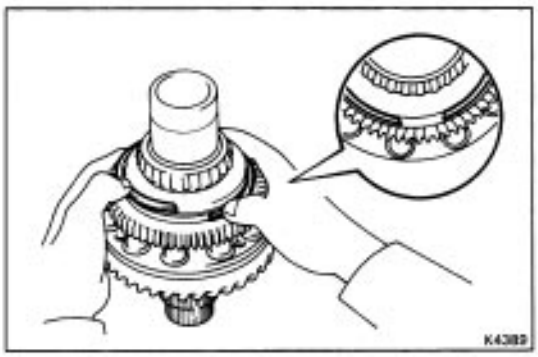

(b) Install shaft snap ring.

(Transfer Left Case)

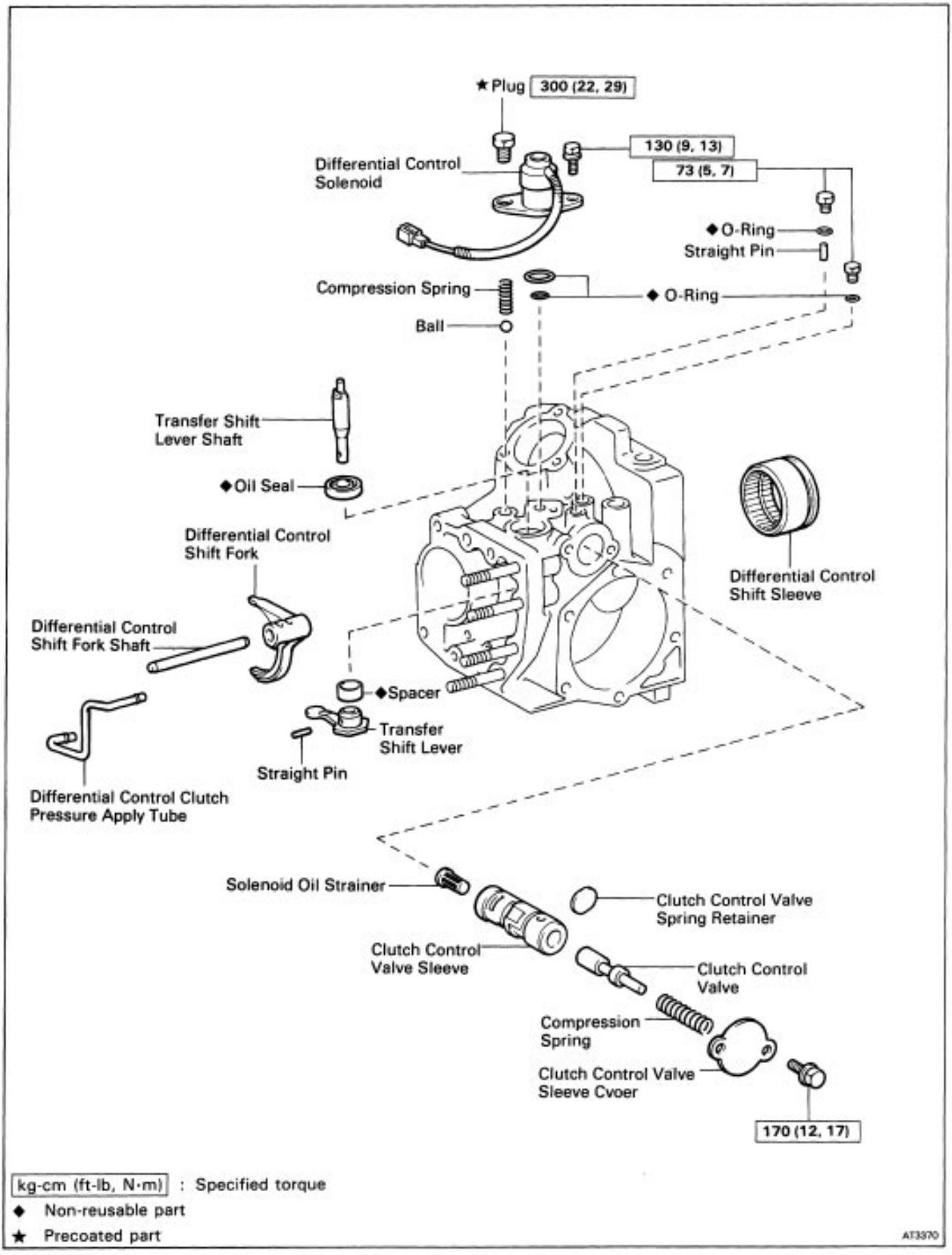

kg-cm (ft-lb, N·m) : Specified torque
◆ Non-reusable part
★ Precoated part

AT3370

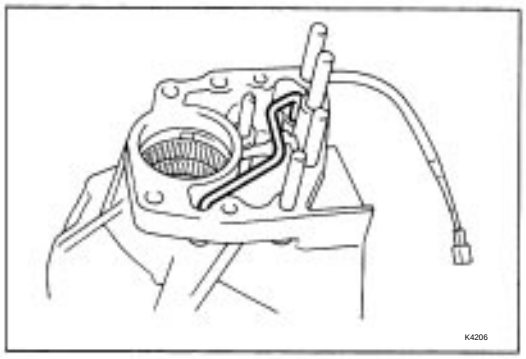

DISASSEMBLY OF TRANSFER LEFT CASE

1. REMOVE APPLY TUBE

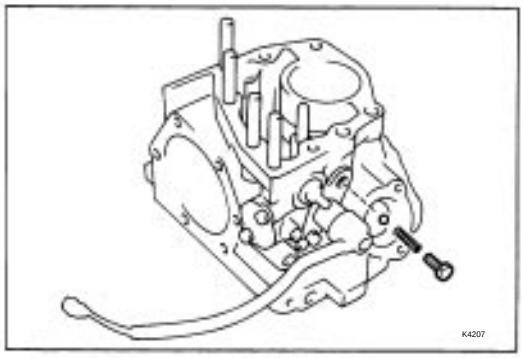

2. REMOVE CENTER DIFFERENTIAL CONTROL SOLENOID

(a) Remove the plug, compression spring and ball.

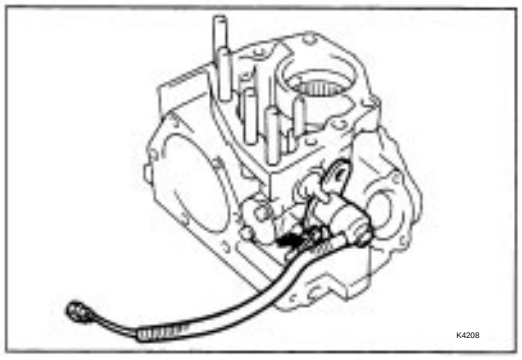

(b) Remove a bolt and solenoid.

(c) Remove two O–rings from the solenoid.

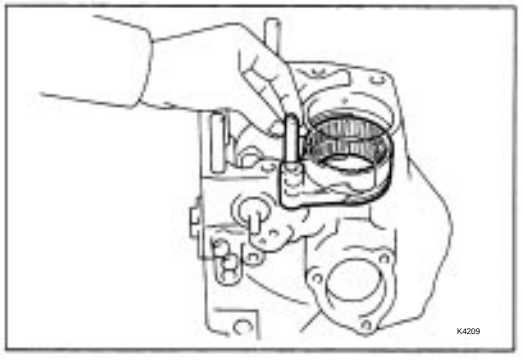

3. REMOVE DIFFERENTIAL CONTROL SHIFT FORK SHAFT, SHIFT FORK AND SLEEVE

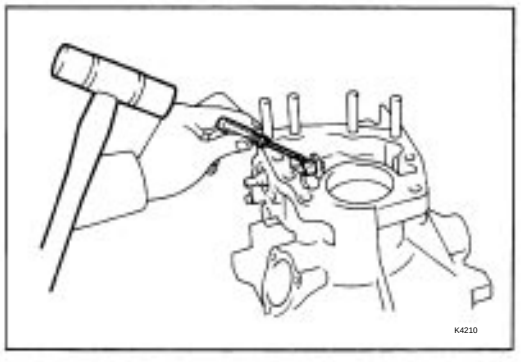

4. REMOVE TRANSFER SHIFT LEVER

(a) Using a screwdriver and a hammer, cut out the spacer.

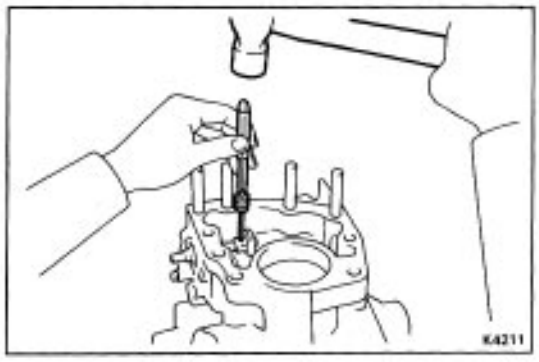

(b) Using a pin punch and a hammer, drive out the straight pin.

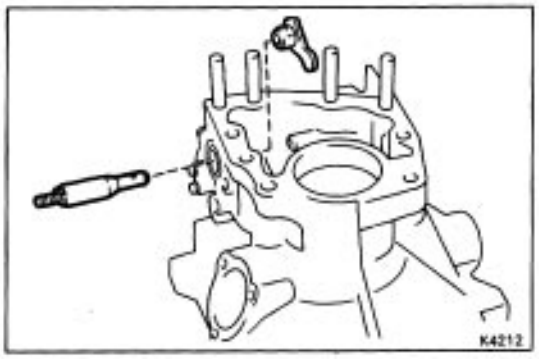

(c) Remove the shift lever shaft and shift lever.

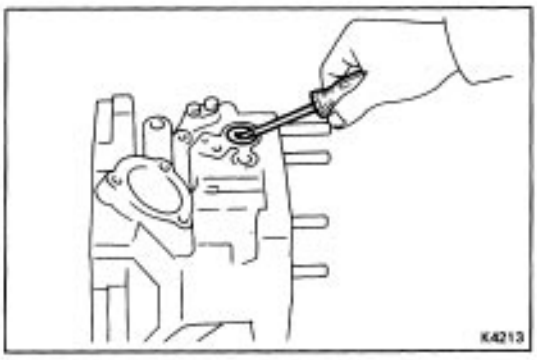

(d) Using a screwdriver, remove the oil seal.

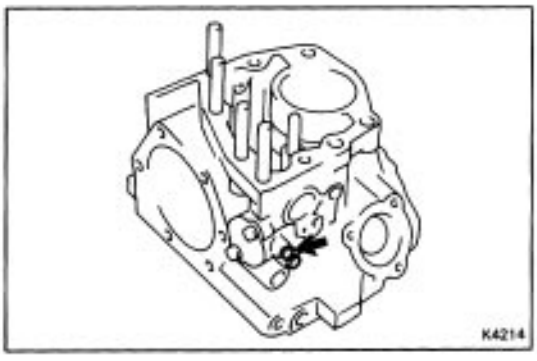

5. REMOVE PLUGS

(a) Remove two plugs.

(b) Remove the O–rings from each plugs.

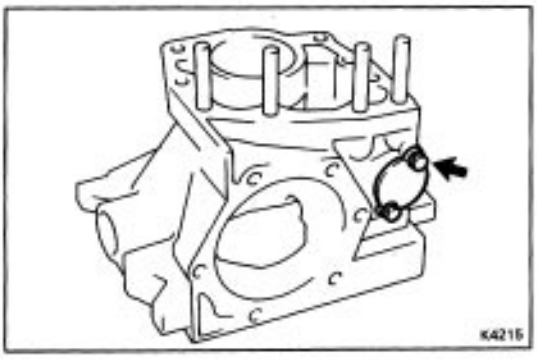

6. REMOVE DIFFERENTIAL CONTROL VALVE

(a) Remove the control valve sleeve cover.

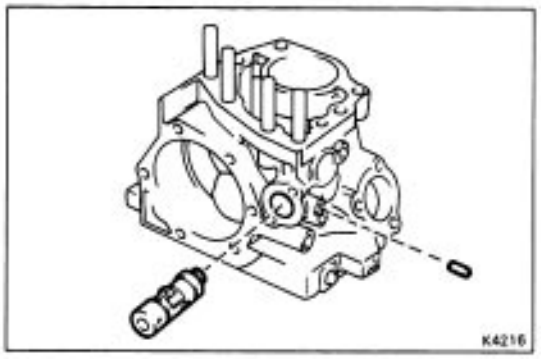

(b) Remove straight pin and control valve sleeve.

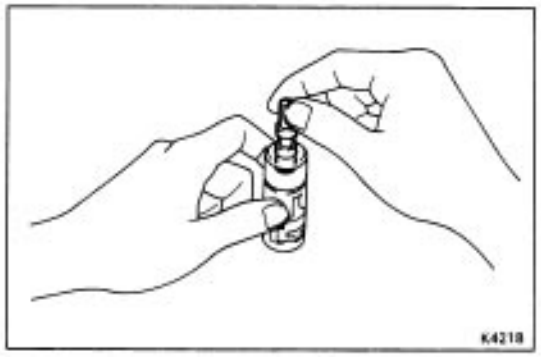

(c) Remove following parts from the control valve sleeve:

- Valve spring retainer
- Compression spring
- Control valve
- Solenoid oil strainer

ASSEMBLY OF TRANSFER LEFT CASE

1. INSTALL DIFFERENTIAL LOCK CLUTCH CONTROL VALVE

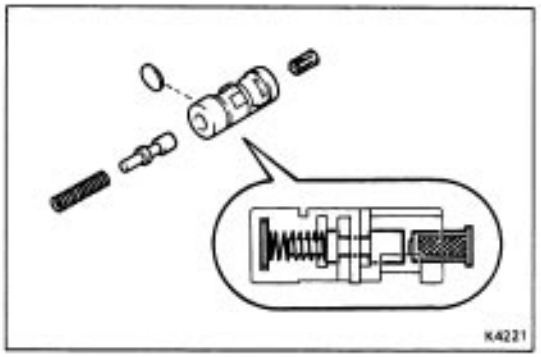

(a) Install following parts to the control valve sleeve:

- Solenoid oil strainer
- Control valve
- Compression spring
- Valve spring retainer

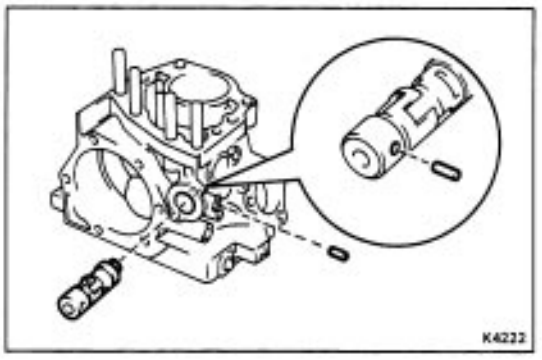

(b) Install the control valve sleeve and straight pin.

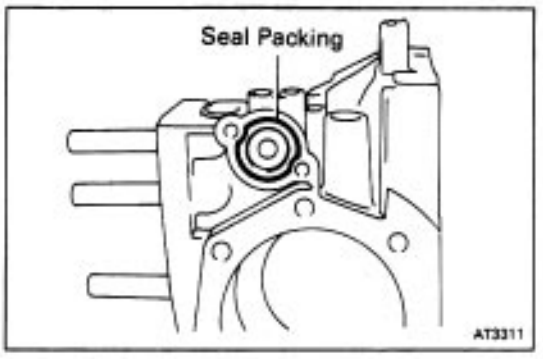

(c) Apply seal packing to the rear cover as shown.

Seal packing: Part No.08826–00090 THREE BOND 1281, or equivalent

HINT: Install the cover as soon as the seal packing is applied.

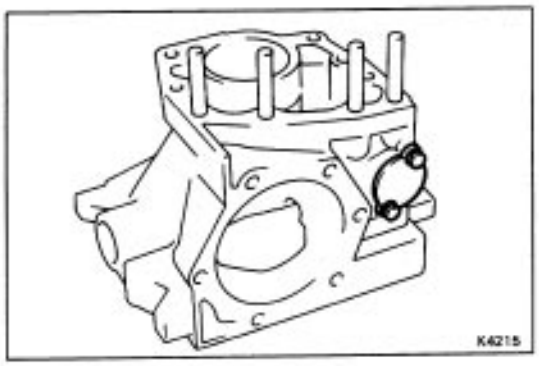

(d) Install control valve sleeve cover.
Torque: 130 kg–cm (9 ft–lb, 13 N–m)

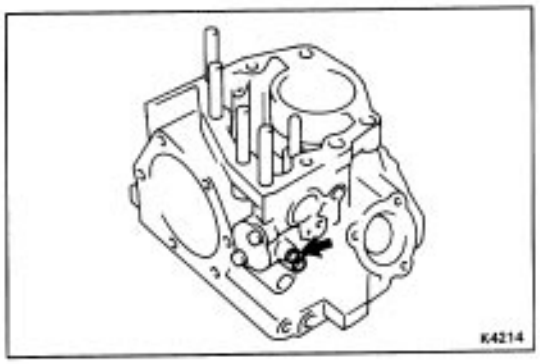

2. INSTALL PLUGS

(a) Coat the O–rings with ATF, and install it on to the plugs.
(b) Install the two plugs.

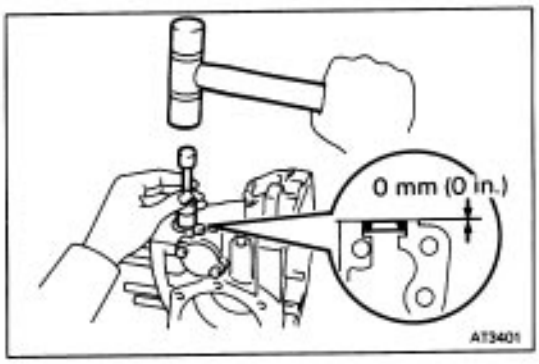

3. INSTALL TRANSFER SHIFT LEVER

(a) Coat the rip of new oil seal with MP grease.
(b) Using a 17 mm (0.67 in.) socket wrench and hammer, drive in the oil seal as shown.

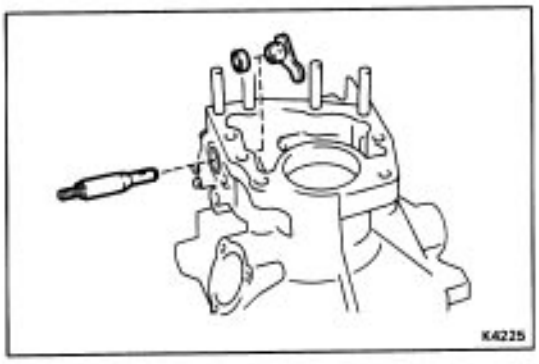

(c) Install the transfer shift lever shaft, new spacer and shift lever.

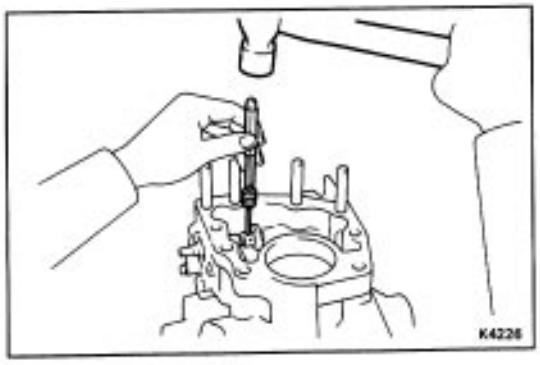

(d) Using a pin punch and hammer, drive in the pin.

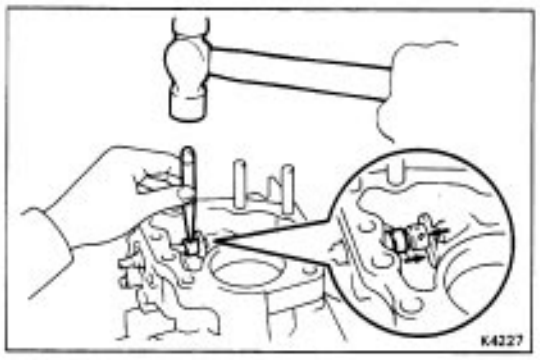

(e) Slide the spacer as shown.
(f) Using a pin punch and hammer, stake the spacer

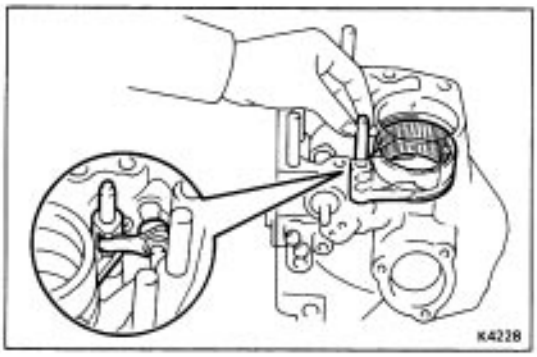

4. INSTALL DIFFERENTIAL CONTROL SHIFT FORK, SLEEVE AND SHIFT FORK SHAFT

HINT: Engaged shift fork and transfer shift lever.

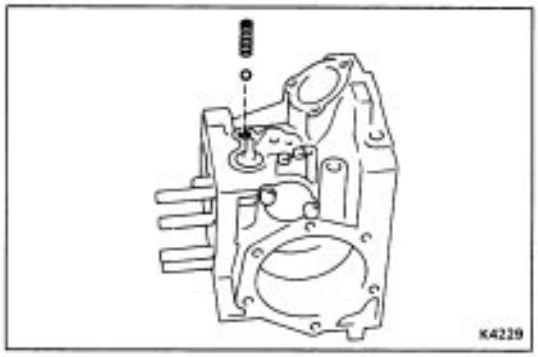

5. INSTALL CENTER DIFFERENTIAL CONTROL SOLENOID

(a) Install the ball and compression spring.
(b) Coat the two new 4–rings with ATF, install it on to the solenoid.

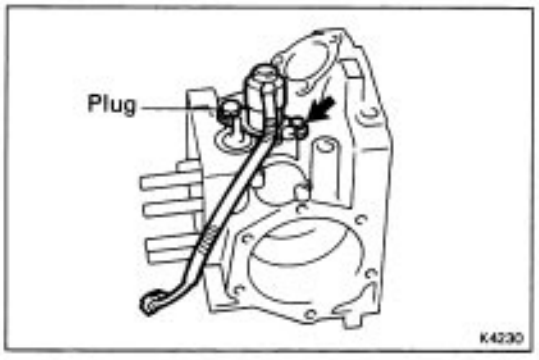

(c) Install the solenoid.
(d) Install and tighten the plug and the bolt.

Torque: Bolt 130 kg–m (9 ft–lb, 13 N–m)
Plug 300 kg–m (22 ft–lb, 29 N–m)

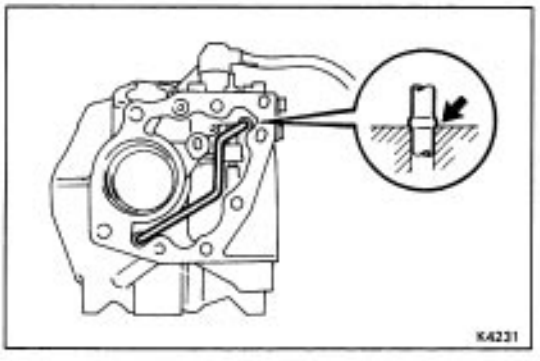

6. INSTALL APPLY TUBE

Tap the tubes with a plastic hammer to install then into the positions indicated in the illustration.

NOTICE: Be careful not to bend or damage the tubes.

ASSEMBLY OF COMPONENT PARTS

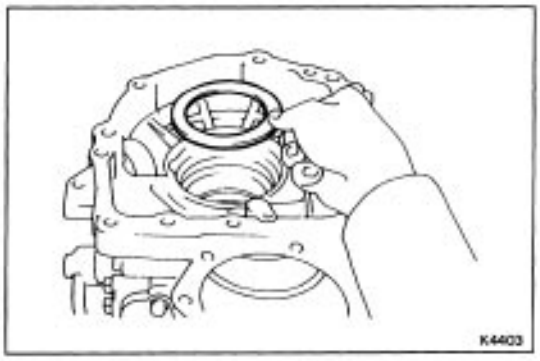

1. INSTALL LEFT CASE SIDE

(a) Install the plate washer.

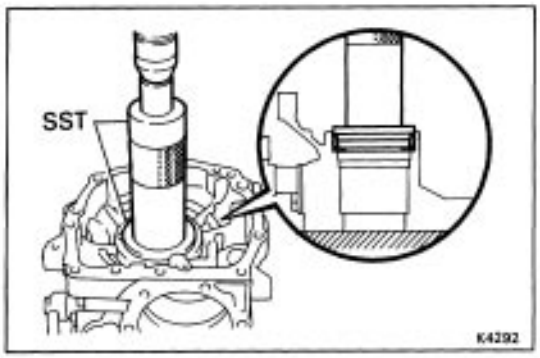

(b) Using SST and a press, press in the outer race.
SST 09316–60010 (09316– 10,09316–00060)

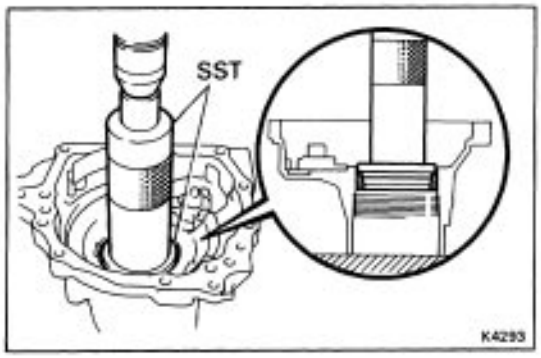

2. INSTALL RIGHT CASE SIDE

(a) Using SST and a press, press in outer race as shown.
SST 09316–60010 (09316– 10,09316–00060)

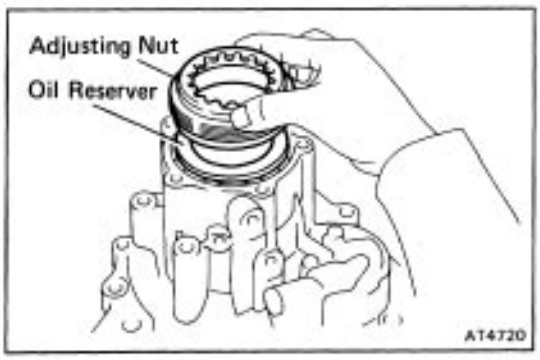

(b) Install the bearing adjusting nut and oil reservoir, until it touch the outer race.

3. ADJUST RING GEAR BACKLASH

(a) Install the shim to the driven pinion bearing cage assembly.
HINT: First install a shim of the some thickness as before.

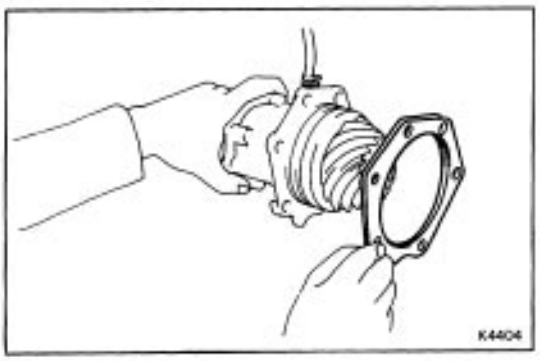

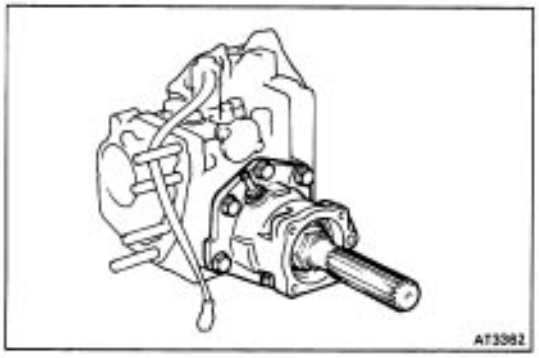

(b) Install driven pinion bearing cage.
Torque: 400 kg–cm (29 ft–lb, 39 N–m)
HINT: Do not install the O–ring.

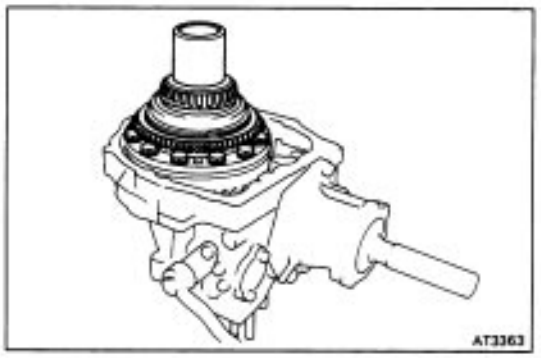

(c) Install ring gear mounting case and center differential case.
(d) Using a dial indicator, measure the ring gear backlash.
Backlash: 0.13 – 0.18 mm (0.0051 – 0.0071 in.)

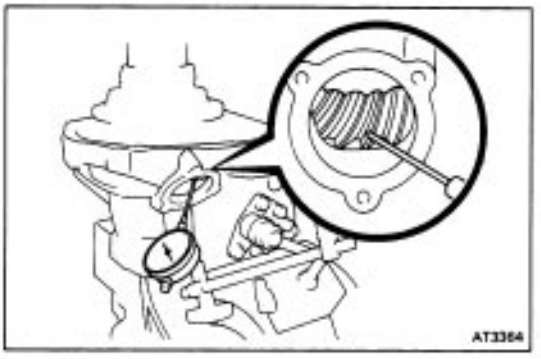

(e) Referring to the table bellow, select the plate washer which will ensure that the backlash is with in specification.
Plate washer thickness

mm (in.)

Mark	Thickness	Mark	Thickness
71	2.13 (0.0839)	83	2.49 (0.0980)
72	2.16 (0.0850)	84	2.52 (0.0992)
73	2.19 (0.0862)	85	2.55 (0.1004)
74	2.22 (0.0874)	86	2.58 (0.1016)
75	2.25 (0.0886)	87	2.61 (0.1028)
76	2.28 (0.0898)	88	2.64 (0.1039)
77	2.31 (0.0909)	89	2.67 (0.1051)
78	2.34 (0.0921)	90	2.70 (0.1063)
79	2.37 (0.0933)	91	2.73 (0.1075)
80	2.40 (0.0945)	92	2.76 (0.1087)
81	2.43 (0.0957)	93	2.79 (0.1098)
82	2.46 (0.0969)	94	2.82 (0.1110)

Try select a washer of the same size.

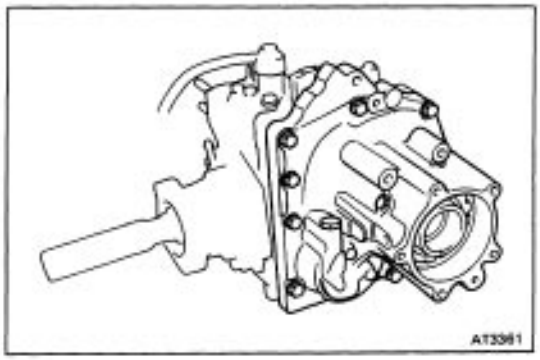

4. ADJUST TOTAL PRELOAD

(a) Install the transfer right case.

HINT: Do not apply seal packing and do not install gasket.

Torque: 450 kg–cm (33 ft–lb, 44 N–m)

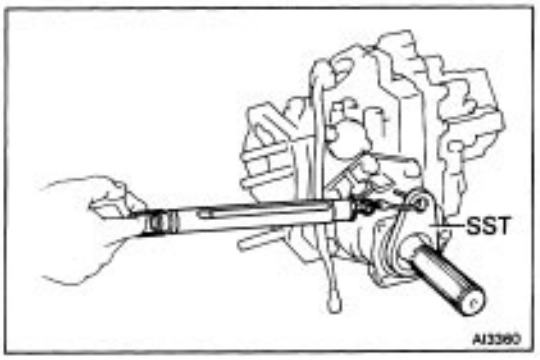

(b) Using SST and a spring tension gage, measure the total preload.

SST 09326–20011

Preload (at starting):

New bearing

Add driven pinion preload

1.3 – 1.4 kg (2.9 – 3.11 lb, 12.7 – 13.7 N–m)

Reused bearing

Add driven pinion preload

0.5–0.9kg(1.1 –2.0 lb,4.9–8.8N–m)

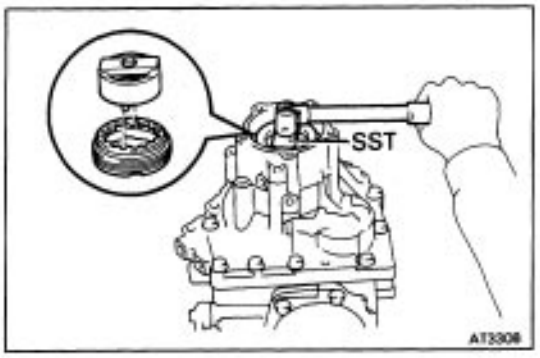

Adjust the total preload by tightening the adjusting nut with SST.

SST 09318–12010

HINT: Measure the preload while tightening the bearing adjusting nut a little at a time.

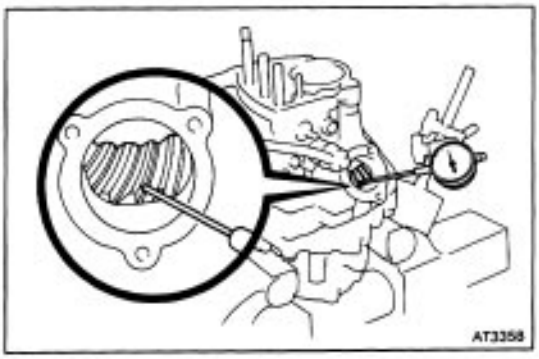

5. CHECK RING GEAR BACKLASH

(a) Using a dial indicator, measure the ring gear backlash.

Backlash: 0.13 – 0.18 mm(0.0051 – 0.0071 in.)

(b) When the backlash is outside the standard value, select a different plate washer to the one selected step3. Again adjust the backlash and total preload.

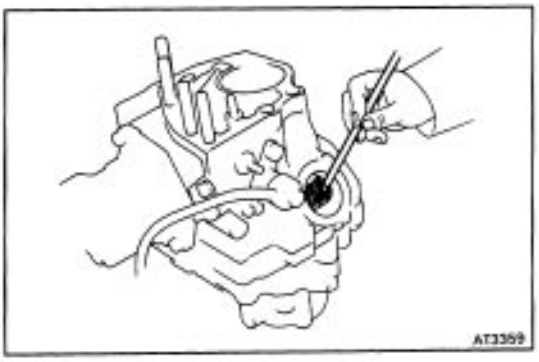

6. CHECK TOOTH CONTACT

(a) Coat 3 or 4 teeth at four different position on the ring gear with red lead.

(b) Rotate the ring gear, inspect the teeth pattern.

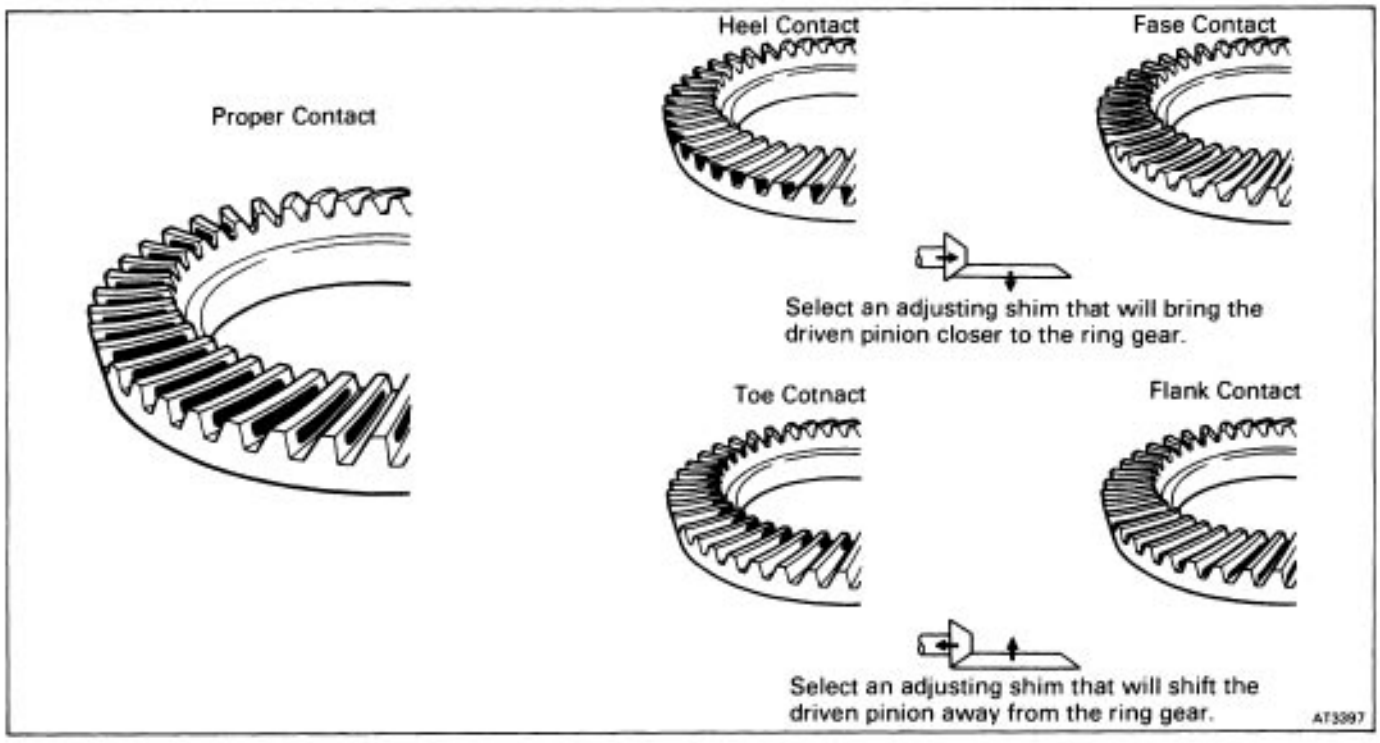

(c) If the teeth are not connecting properly, again the proper shim and plate.

mm (in.)

Mark	Thickness	Mark	Thickness–
A	0.30 (0.0118)	F	0.45 (0.0177)
B	0.33 (0.0130)	G	0.48 (0.0189)
C	0.36 (0.0142)	H	0.51 (0.0201)
D	0.39 (0.0154)	J	0.54 (0.0213)
E	0.42 (0.0165)	K	0.57 (0.0224)

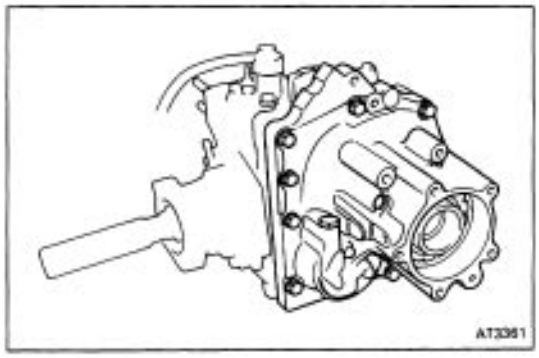

7. REMOVE TRANSFER RIGHT CASE

Remove the ten bolts and transfer right case.

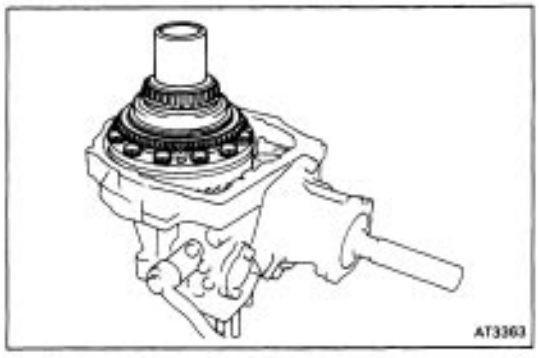

8. REMOVE RING GEAR MOUNTING CASE AND CENTER DIFFERENTIAL CASE

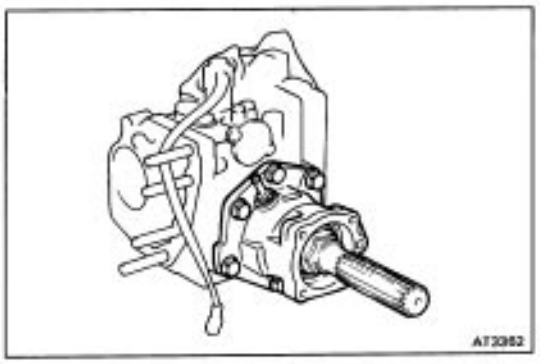

9. REMOVE DRIVEN PINION BEARING CAGE

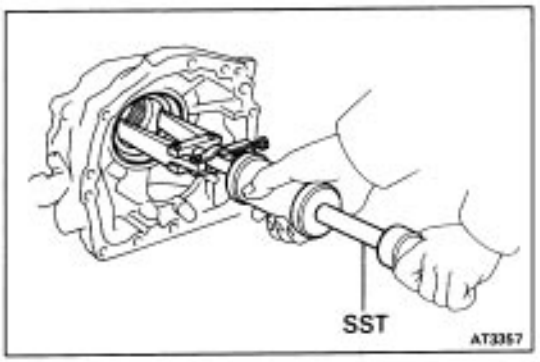

10. REMOVE LEFT CASE BEARING OUTER RACE AND PLATE WASHER

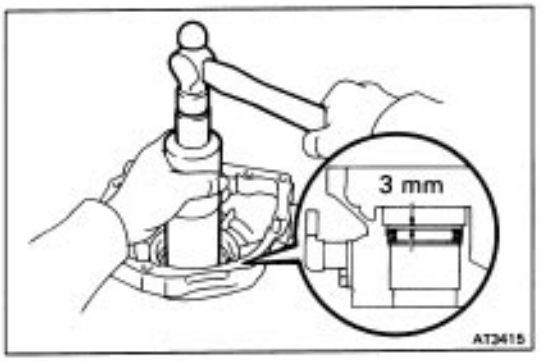

11. INSTALL OIL SEAL

(a) Using SST, install a new oil seal as shown.
SST 09316–60010 (09316–00010,09316–00030)
Oil seal depth: 3 mm (0.12 in.)

(b) Coat the lip of oil seal with MP grease.

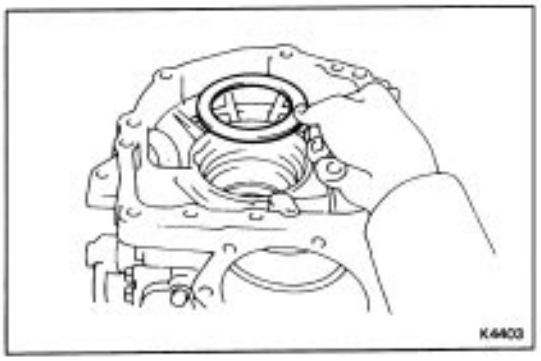

12. INSTALL LEFT CASE BEARING OUTER RACE

(a) Install the plate washer.(previously selected)

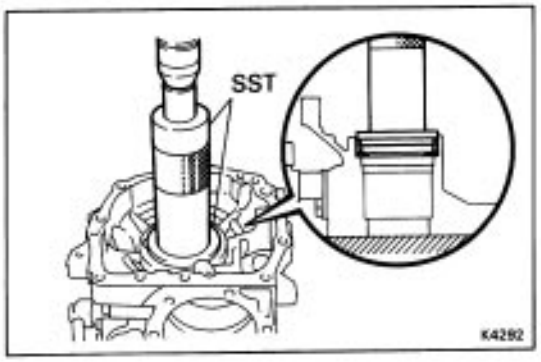

(b) Using SST and a press, press in the outer race.
SST 09316–60010 (09316–00010,09316–00060)

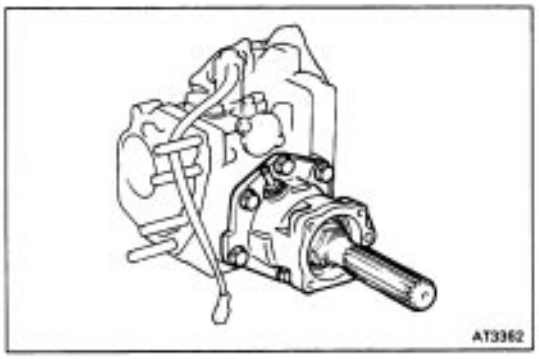

13. INSTALL DRIVEN PINION BEARING CAGE

(a) Coat the O–ring with gear oil, and install it to the bearing cage.

(b) Install shim (previously selected) and bearing cage assembly.

Torque: 400 kg–cm (29 ft–lb, 39 N–m)

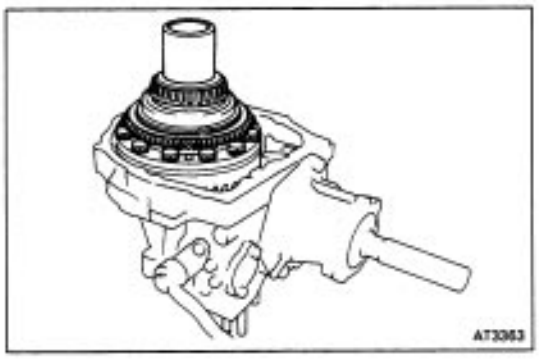

14. INSTALL RING GEAR MOUNTING CASE AND CENTER DIFFERENTIAL CASE

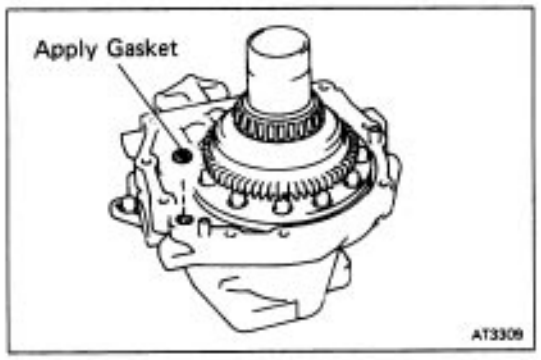

15. INSTALL TRANSFER RIGHT CASE

(a) Install a new apply gasket to the left case.

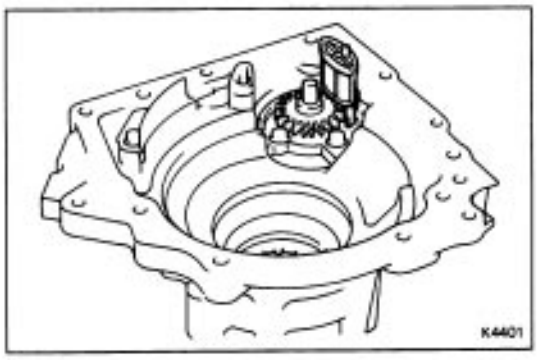

(b) Install oil pump strainer and driven gear to the right case.

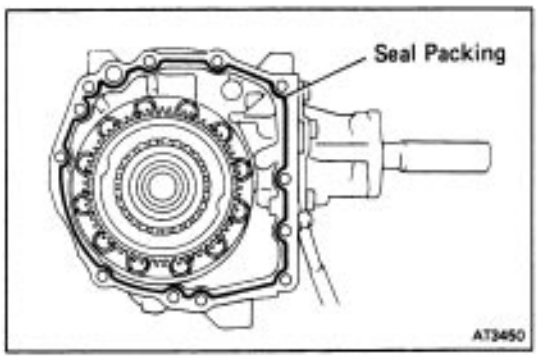

(c) Apply seal packing to the left case as shown in the figure.

Seal packing: Part No. 08826–00090 THREE BOND 1281 or equivalent

HINT: Install the right case as soon as the seal packing is applied.

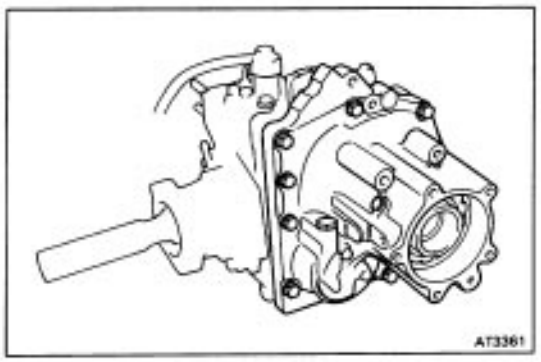

(d) Install right case and ten bolts.
Torque: 450 kg–cm (33 ft–lb, 44 N–m)

16. CHECK TOTAL PRELOAD
(See page AT–267)

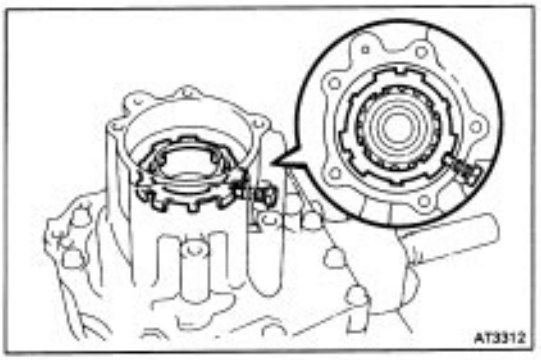

17. INSTALL ADJUSTING NUT LOCK PLATE
Install the lock plate so that the projection from the lock plate fits properly into the groove of the adjusting nut.

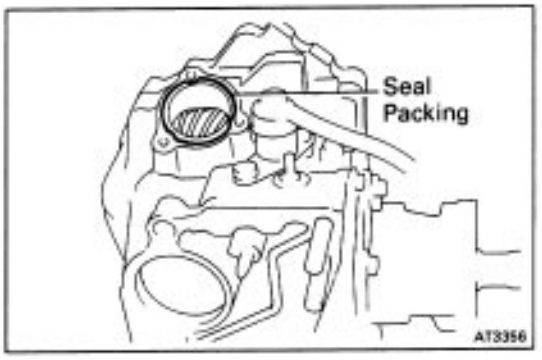

18. INSTALL TRANSFER INSPECTION HOLE COVER
(a) Apply seal packing to the left case as shown in the figure.
Seal packing: Parts No. 08826–00090 THREE BOND 1281 or equivalent
HINT: Install the cover as soon as the seal packing is applied.

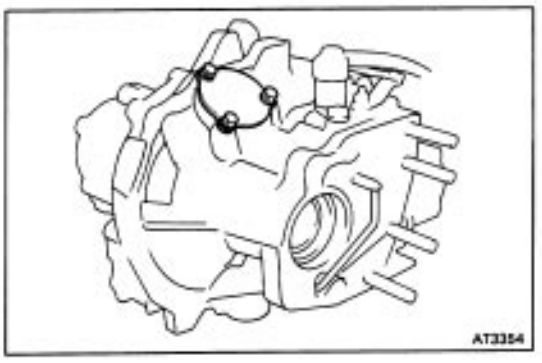

(b) Install hole cover.
Torque: 170 kg–cm (12 ft–lb, 17 N–m)

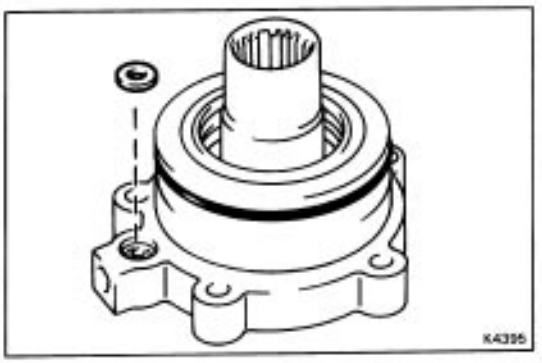

19. INSTALL TRANSFER RIGHT CASE RETAINER
Coat a O–ring with gear oil, and install it and new apply gasket.

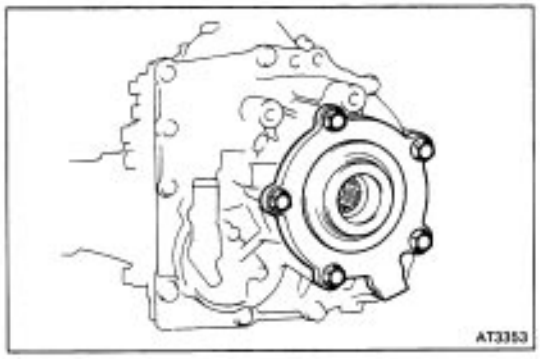

(b) Install case retainer.
Torque: 260 kg–cm (19 ft–lb, 25 N –m)

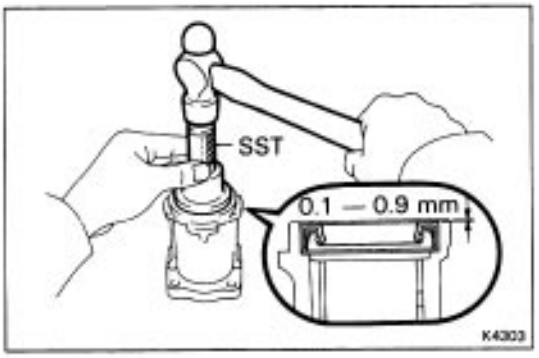

20. INSTALL EXTENSION HOUSING

(a) Using SST and a hammer, drive in a new oil seal as shown.
SST 09325–20010
Oil seal depth: 0.1 – 0.9 mm (0.004 – 0.035 in.)
(b) Coat the lip of the oil seal with MP grease.

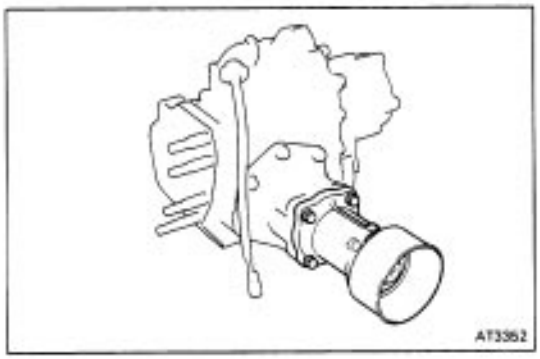

(c) Coat a new O–ring with gear oil.
(d) Install dust deflector and O–ring to the extension housing.
(e) Install extension housing to the driven pinion bearing cage.
Torque: 260 kg–cm (19 ft–lb, 25 N–m)

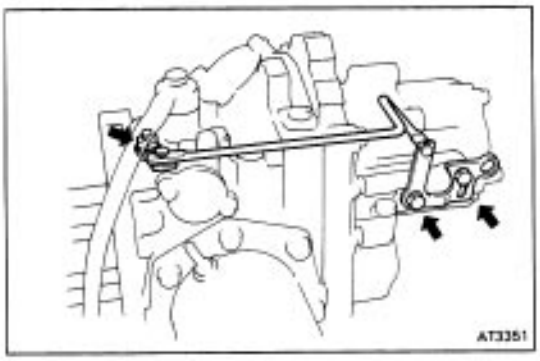

21. INSTALL TRANSFER MODE SELECT LEVER AND ROD

(a) Install the lever, rod and lever guide.
Torque: 130 kg–cm (9 ft–lb, 13 N–m)
(b) Install the bolt while setting the lever as shown.
Torque: 130 kg–cm (9 ft–lb, 13 N–m)

INSTALLATION OF COMPONENT PARTS (A131L)

(See pages AT–47 to 49)

Disassembly, inspection and assembly of each component group have been indicated in the preceding chapter. Before assembly, make sure, again, that all component groups are assembled correctly.

If something wrong is found in a certain component group during assembly, inspect and repair this group immediately.

Recommended ATF: DEXRON® II

GENERAL INSTALLATION NOTES:

1. The automatic transmission is composed of highly precision–finished parts, necessitating careful inspection before assembly because even a small nick could cause fluid leakage or affect performance.
2. Before assembling new clutch discs, soak them in automatic transmission fluid for at least two hours.
3. Apply automatic transmission fluid on the sliding or rotating surfaces of parts before assembly.
4. Use petroleum jelly to keep small parts in their place.
5. Do not use adhesive cements on gaskets and similar parts.
6. When assembling the transmission, be sure to use new gaskets and O–rings.
7. Dry all parts with compressed air–never use shop rags.

8. Be sure to install the thrust bearings and races in the correct direction and position.

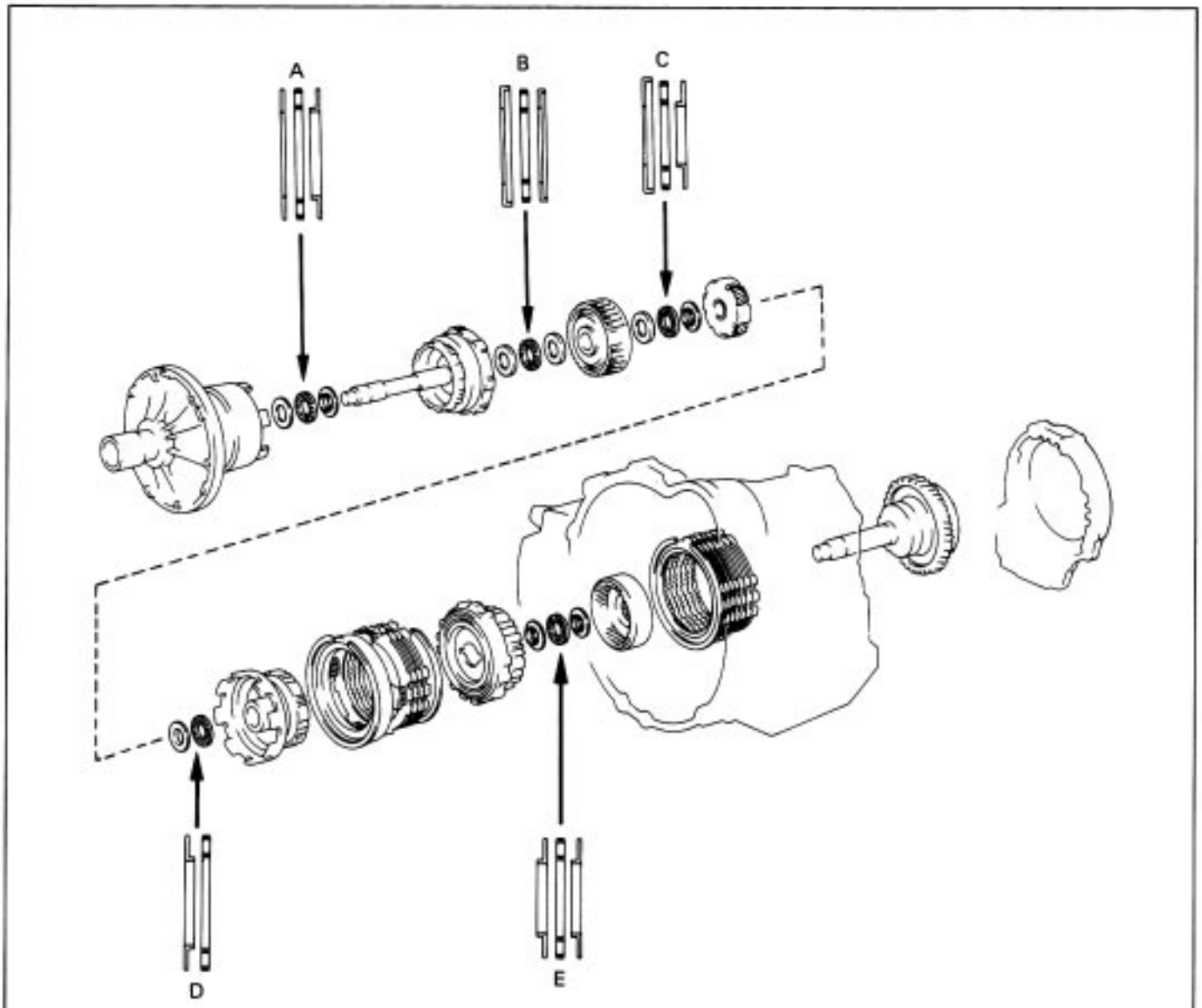

mm (in.)

		A	B	C	D	E
Front Bearing Race	Outer Diameter	43.0 (1.693)	37.9 (1.492)	←	45.0 (1.772)	37.3 (1.469)
	Inner Diameter	30.5 (1.201)	22.0 (0.866)	←	28.0 (1.102)	24.1 (0.949)
Thrust Bearing	Outer Diameter	42.0 (1.654)	36.1 (1.421)	←	45.0 (1.772)	37.6 (1.480)
	Inner Diameter	28.9 (1.138)	22.2 (0.874)	←	30.0 (1.181)	24.0 (0.974)
Rear Bearing Race	Outer Diameter	42.0 (1.654)	35.7 (1.406)	35.0 (1.378)	–	37.6 (1.480)
	Inner Diameter	27.1 (1.067)	23.0 (0.906)	19.0 (0.748)	–	22.2 (0.874)

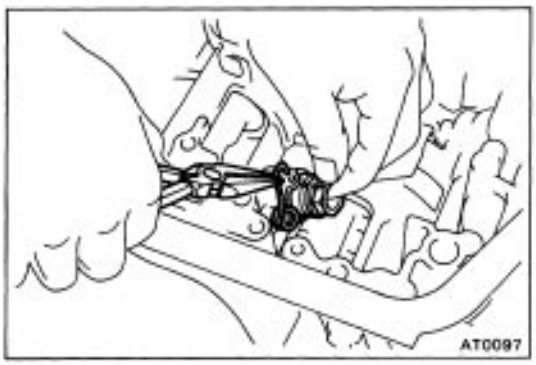

1. INSTALL GOVERNOR PRESSURE ADAPTOR

(a) Install the governor pressure adaptor into the case.
(b) Align the hole of adaptor with the hole of the case and install the torsion spring.
(c) Check that the adaptor does not slide or the spring fall out when pulled by hand.

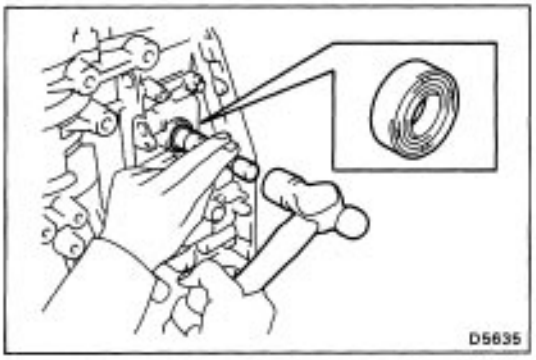

2. INSTALL MANUAL VALVE SHAFT

(a) Install the manual valve shaft oil seal to the case.

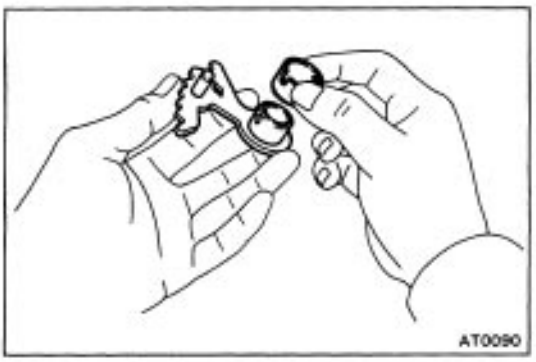

(b) Assemble a new collar to the manual valve lever.
(c) Install the manual valve lever shaft to the transmission case through the manual valve lever.

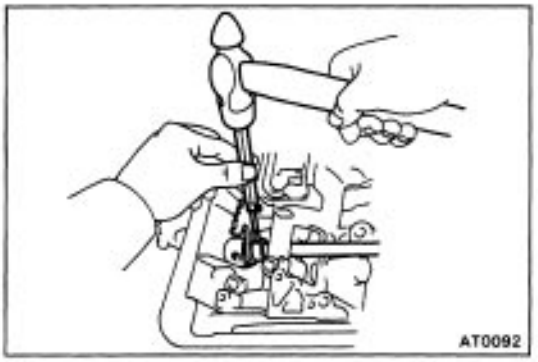

(d) Using a pin punch, drive in the roll pin until its surface is flush with the manual valve lever surface.

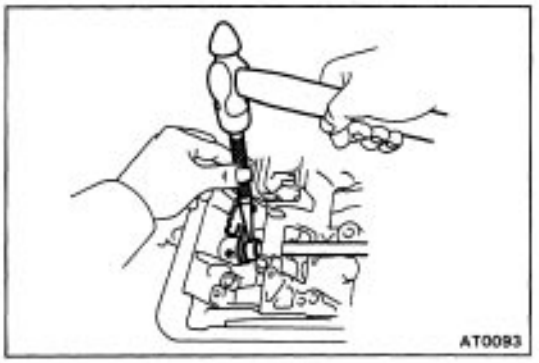

(e) Match the collar hole to the lever calking hollow and calk the collar to the lever.

(f) Install the retaining spring.

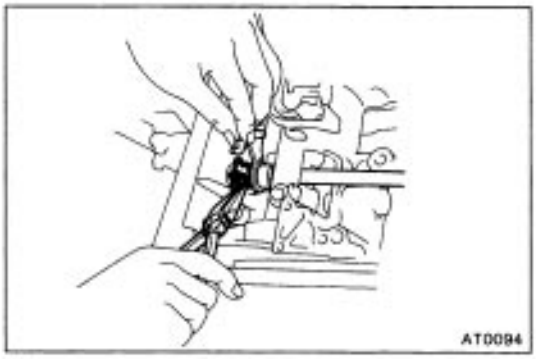

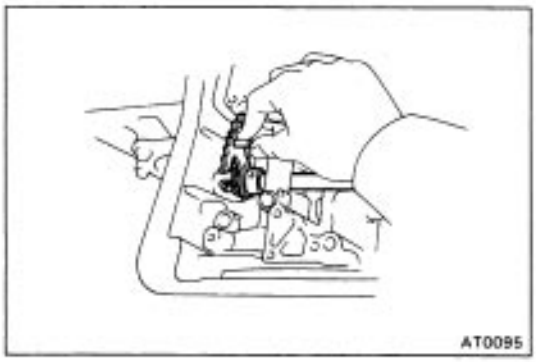

(g) Make sure that the lever moves smoothly.

3. INSTALL PARKING LOCK PAWL

(a) Place the parking lock pawl onto the case. Hook the spring ends to the case and pawl.

(b) Install the pin into the hole of the case through the spring and pawl.

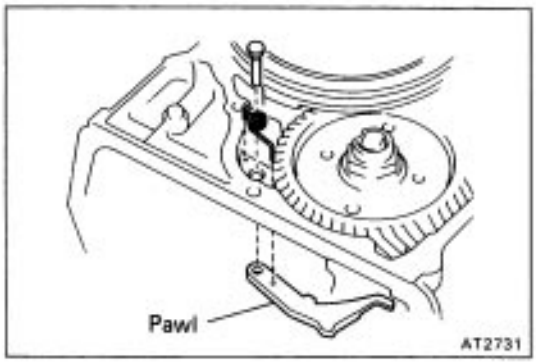

4. INSTALL PARKING LOCK ROD

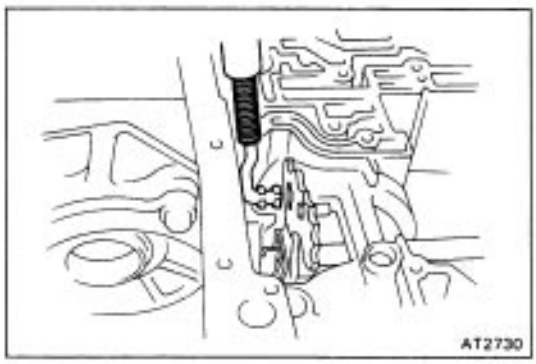

5. INSTALL PARKING LOCK PAWL BRACKET

Torque: 75 kg–cm (65 in.–lb, 7.4 N–m)

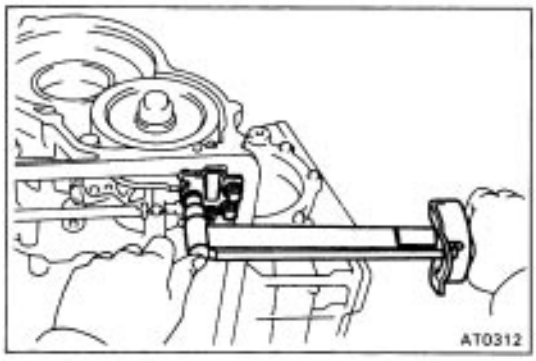

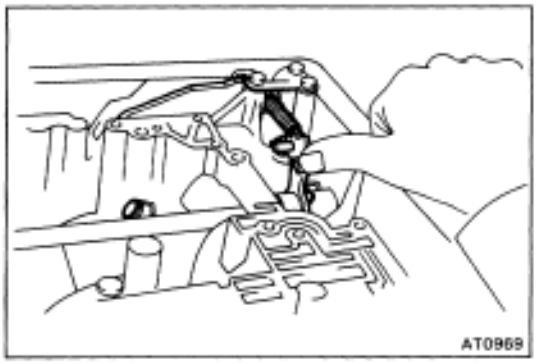

6. CHECK OPERATION OF PARKING LOCK PAWL

Make sure the counter driven gear is locked when the manual valve lever is in the P range.

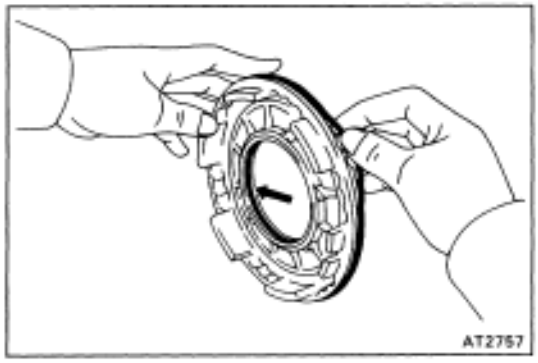

7. INSTALL FIRST AND REVERSE BRAKE PISTON TO TRANSMISSION CASE

(a) Coat the new O–rings with ATF.

(b) Install the two O–rings on the piston.

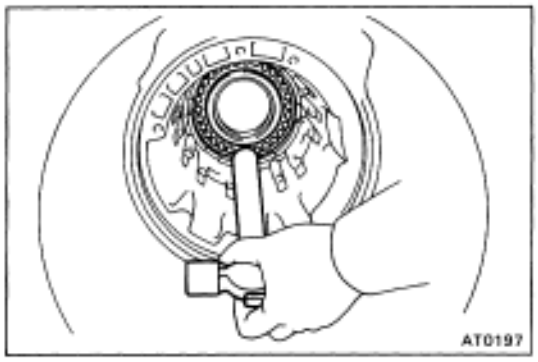

(c) Push the piston into the bore of the case, facing the spring seat upward.

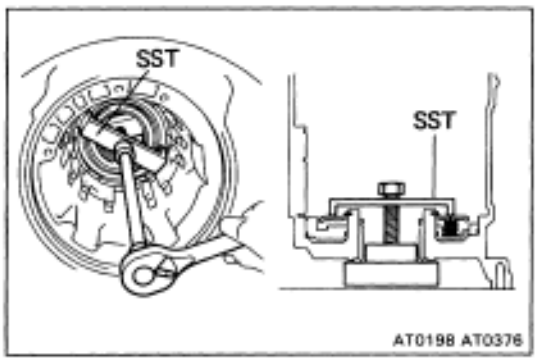

8. INSTALL PISTON RETURN SPRING

(a) Place the return spring and snap ring on the piston.

(b) Place SST, and compress the return spring evenly by tightening the bolt gradually.
SST 09350–32014 (09351–32040)

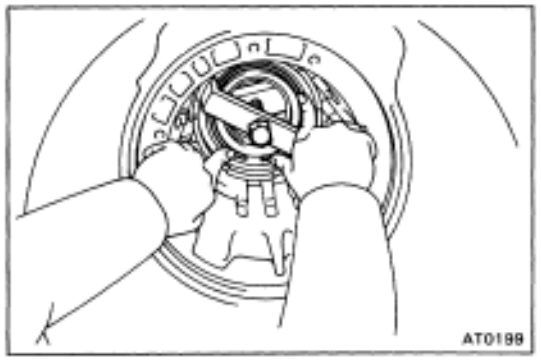

(c) Install snap ring. Visually check to make sure it is fully seated and centered by the three lugs on the spring retainer.
Be sure the end gap of snap ring is not aligned with the spring retainer claw.

(d) Remove SST.

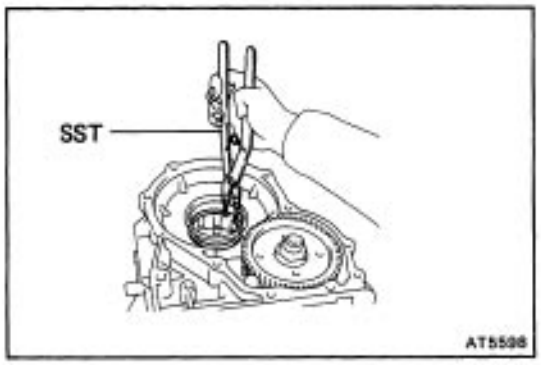

9. INSTALL SNAP RING

Using SST, install the snap ring.
SST 09350–32014 (09351–32050)

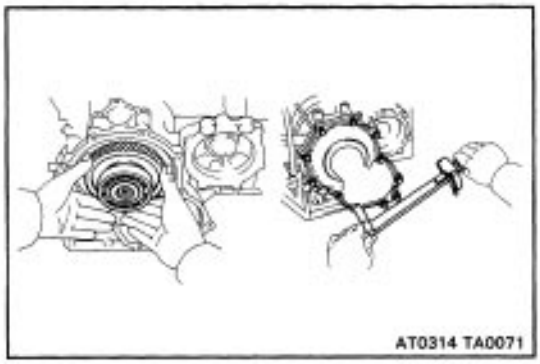

10. INSTALL INTERMEDIATE SHAFT AND TRANSAXLE REAR COVER

(a) Install the intermediate shaft to the case.
(b) Install the new gasket and rear cover.
Torque: 250 kg–cm (18 ft–lb, 25 N–m)

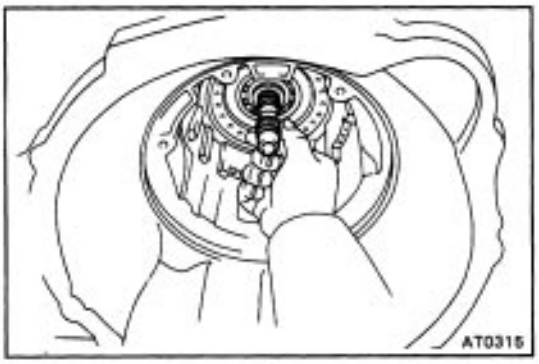

11. CHECK INTERMEDIATE SHAFT END PLAY

(a) Make sure that the intermediate shaft has thrust play in axial direction.
Thrust play: 0.49 – 1.51 mm (0.0193 – 0.0594 in.)
If the thrust play is not within specification, check the installation of intermediate shaft.
(See page AT–143)
(b) Make sure that the intermediate shaft turns smoothly.

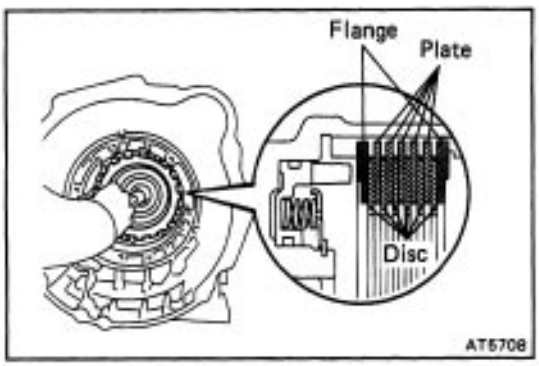

12. INSTALL FIRST AND REVERSE BRAKE IN CASE

(a) Install the inner flange, facing the flat end toward the oil pump side.
(b) Install the discs and plates.
Install in order: P = Plate D = Disc
Flange –D–P–D–P–D–P–D–P
– D – P – D –Flange
(c) Install the outer flange, facing the flat end toward the piston side.

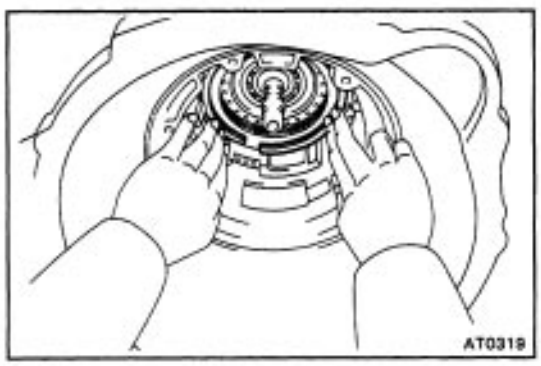

13. INSTALL SNAP RING

Be sure the end gap of the snap ring is not aligned with one of cutouts.

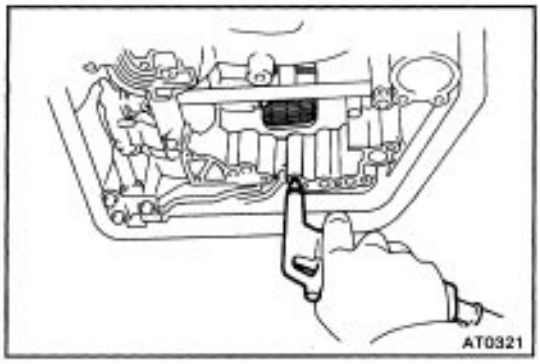

14. CHECK OPERATION OF FIRST AND REVERSE BRAKE

Apply compressed air into the oil passage with the case and be sure that the piston moves.

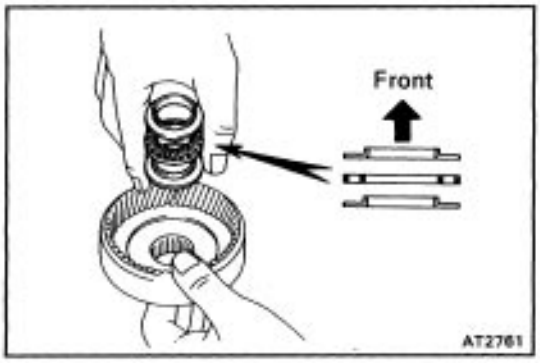

15. INSTALL RING GEAR INTO CASE

(a) Coat the races and bearing with petroleum jelly and install them onto the ring gear.

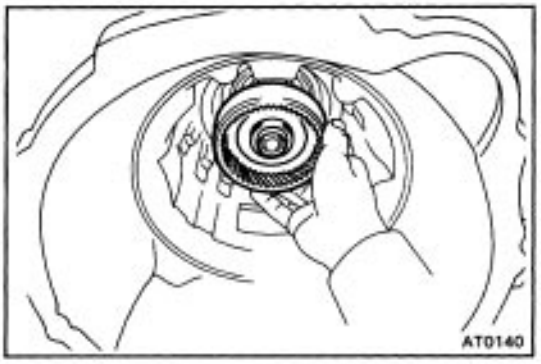

(b) Install the ring gear into the case.

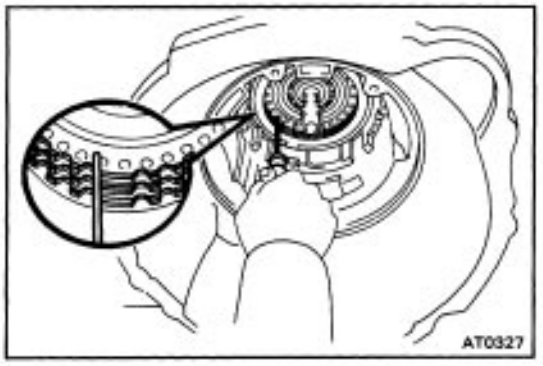

16. INSTALL REAR PLANETARY GEAR INTO CASE

(a) Align the flukes of the discs in the first and reverse brake.

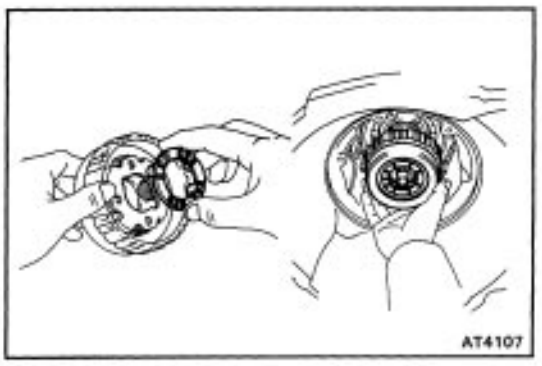

(b) Coat the thrust washer with petroleum jelly. Align the tab of the washer with the hollow of the carrier.

(c) Align the spline of the planetary carrier with either of the flukes of the discs, and install the planetary gear into the first and reverse brake discs.

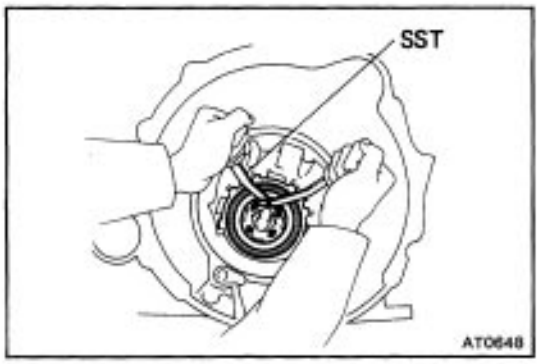

17. INSTALL NO.2 ONE–WAY CLUTCH INTO CASE WITH SHINY SIDE UPWARD

(a) Place the one–way clutch with the shiny side upward.

(b) Install the one–way clutch onto the inner race while turning the planetary gear clockwise with SST.
SST 09350–32014 109351–32050y



(c) Coat the thrust washer with petroleum jelly and install it onto the planetary gear.



18. CHECK OPERATION OF NO.2 ONE–WAY CLUTCH

Turn the planetary carrier. The carrier should turn freely clockwise and lock counterclockwise.

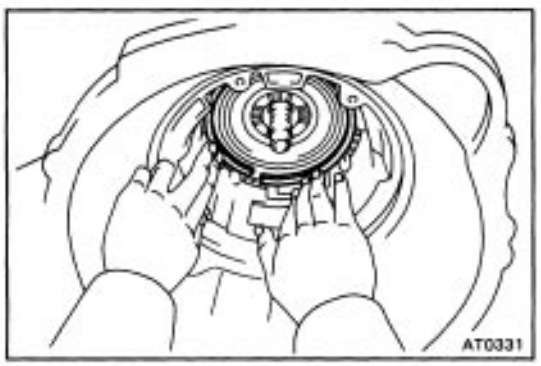

19. INSTALL SNAP RING

Be sure the end gap of the snap ring is not aligned with one of the cutouts.

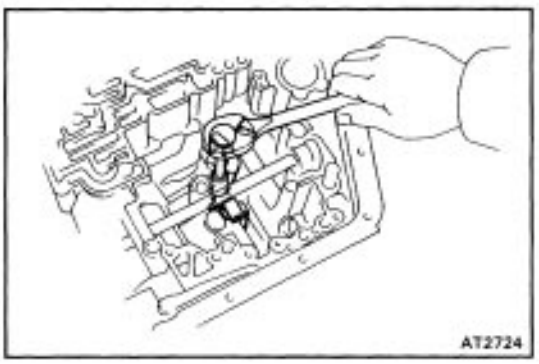

20. INSTALL SECOND COAST BRAKE BAND GUIDE

Install the two band guides so that its tip touches the case.

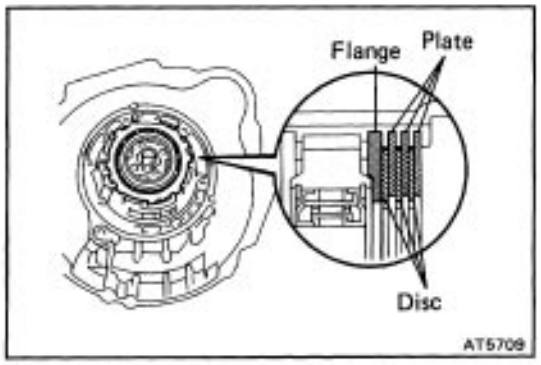

21. INSTALL SECOND BRAKE INTO CASE

(a) Install the flange, facing the flat end toward the oil pump side.

(b) Install the discs and plates.

Install in order: P = Plate D = Disc

D –P–D –P –D –P

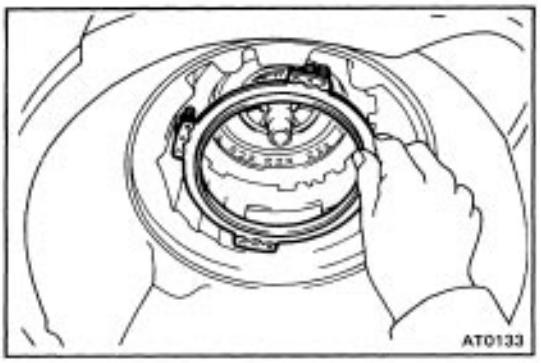

22. INSTALL PISTON RETURN SPRING

Each spring end is installed onto the protrusion with the case.

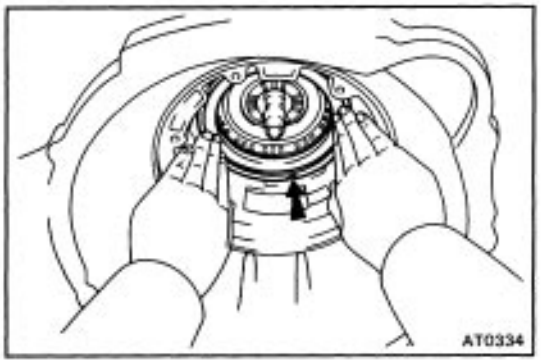

23. INSTALL SECOND BRAKE DRUM INTO CASE

Align the groove of the drum with the bolt and place it into the case.

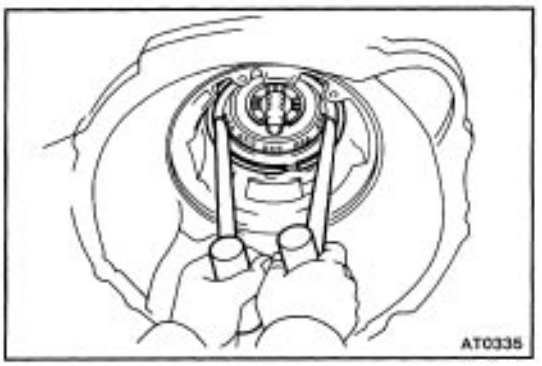

24. INSTALL SNAP RING

(a) Place the snap ring into the case so that the end gap is installed into the groove.

(b) While compressing the piston return springs over the drum with hammer handles, install the snap ring into the groove.

(c) Be sure the end gap of the snap ring is not aligned with one of the cutouts.

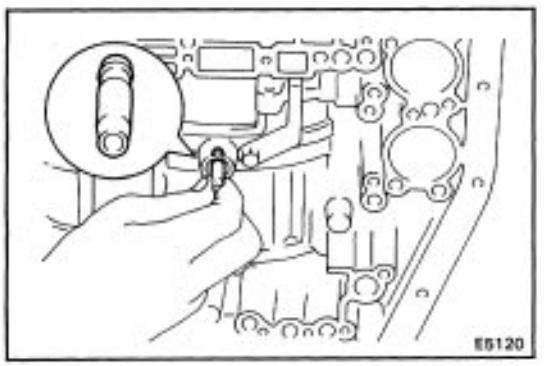

25. INSTALL SECOND BRAKE DRUM GASKET

Install a new gasket until it makes contact with the second brake drum.

26. CHECK OPERATION OF SECOND BRAKE

Blow compressed air into the oil passage with the case, and be sure that the piston moves.

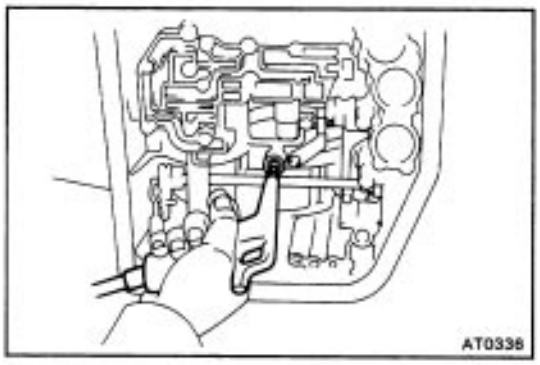

27. INSTALL NO. 1 ONE–WAY CLUTCH AND SECOND BRAKE HUB

(a) Align the flukes of the discs in the 2nd brake.

(b) Align the spline of the hub with the flukes of the discs and install the hub to the 2nd brake discs.

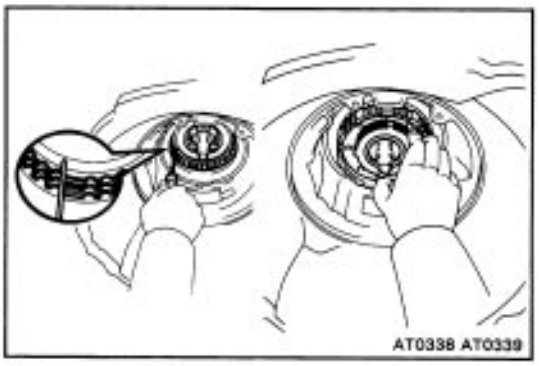

(c) Check the distance between the surfaces of the 2nd brake hub and rear planetary gear.
Distance: Approx. 5 mm (0.20 in.)

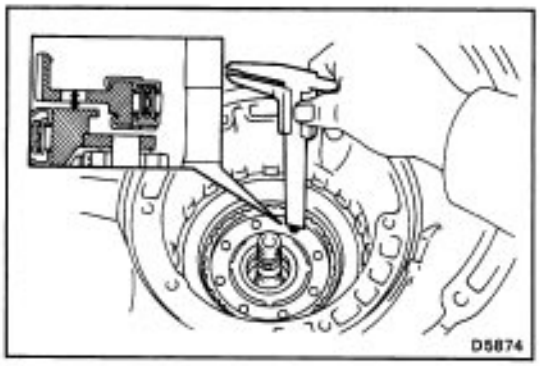

28. INSTALL SUN GEAR AND SUN GEAR INPUT DRUM

While turning the sun gear clockwise, install it into the one–way clutch.

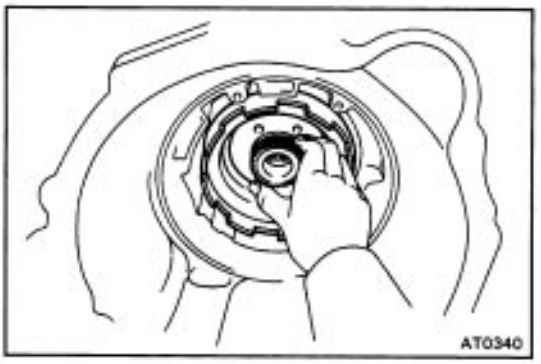

29. INSTALL FRONT PLANETARY GEAR ONTO RING GEAR

(a) Coat the races and bearing with petroleum jelly, and install them onto the ring gear.

Bearing and race:

mm (in.)

	Outer diameter	Inner diameter
Front Race	37.9 (1.492)	22.0 (0.866)
Bearing	36.1 (1.421)	22.2 (0.874)
Rear Race	35.0 (1.378)	19.0 (0.748)

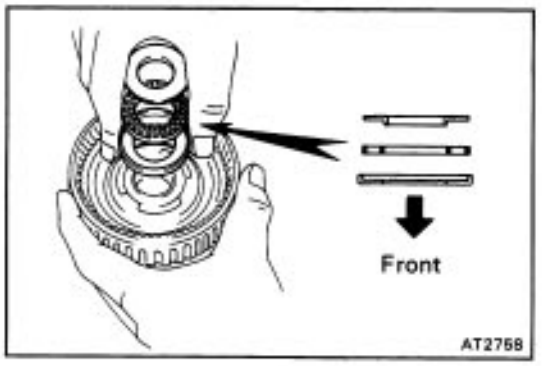

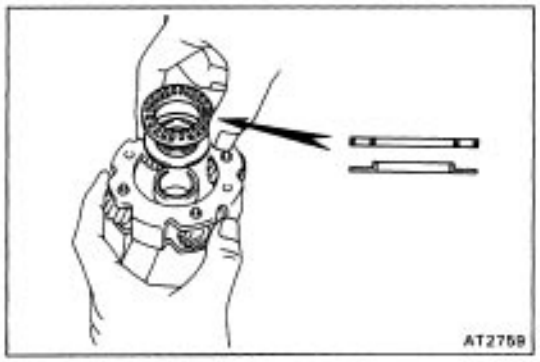

(b) Coat the races and bearing with petroleum jelly, and install them onto the planetary gear.
Bearing and race:

mm (in.)

	Outer diameter	Inner diameter
Bearing	45.0 (1.772)	30.0 (1.181)
Race	45.0 (1.772)	28.0 (1.102)

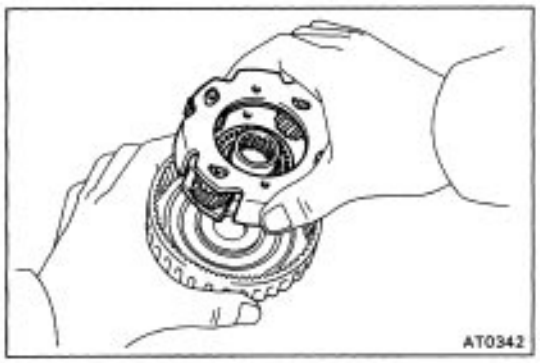

(c) Install the planetary gear onto the ring gear.

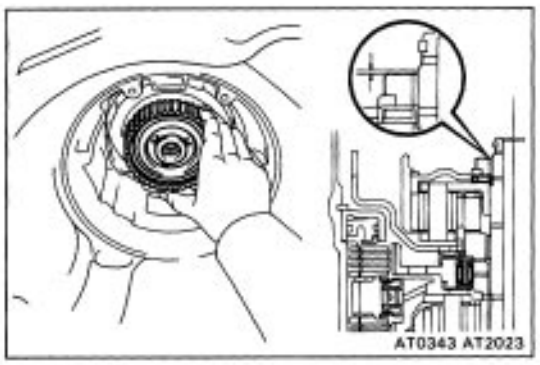

30. INSTALL FRONT PLANETARY GEAR ASSEMBLY ONTO SUN GEAR

(a) If the planetary gear and other parts are installed correctly into the case, the end of the bushing with the ring gear flange will be flush with a shoulder of the intermediate shaft or under.

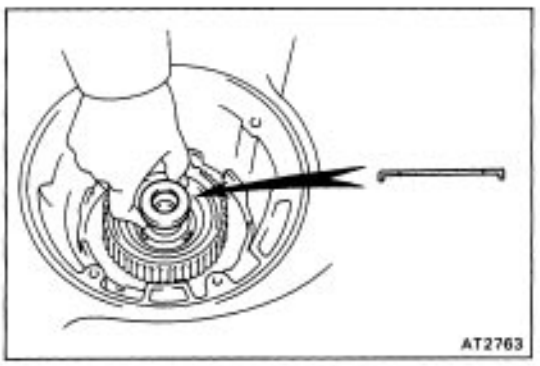

(b) Coat the race with petroleum jelly and install it onto the tip of ring gear flange.
Race: Outer diameter 35.7 mm 0.406 in.)
Inner diameter 23.0 mm (0.906 in.)

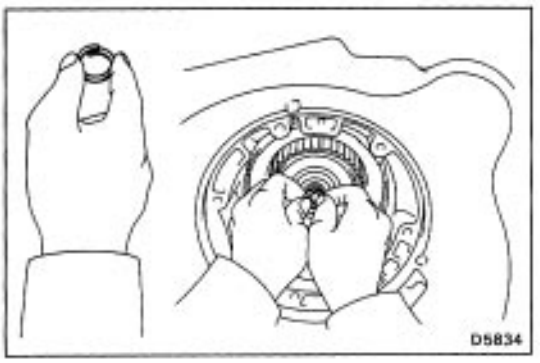

31. INSTALL INTERMEDIATE SHAFT OIL SEAL RING

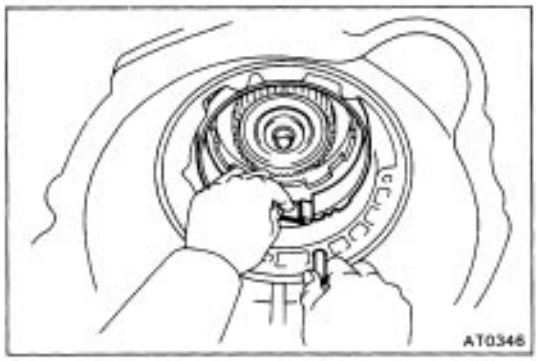

32. INSTALL SECOND COAST BRAKE BAND

(a) Place the band into the case.

(b) Install the pin through the oil pump mounting bolt hole.

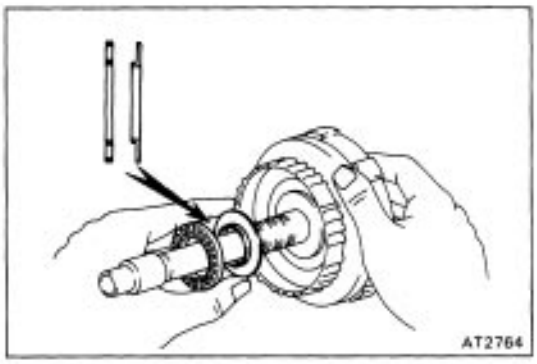

33. INSTALL FORWARD CLUTCH AND DIRECT CLUTCH

(a) Coat the races and bearing with petroleum jelly, and install them onto both sides of the clutch drum.

Bearing and race:

mm (in.)

	Outer diameter	Inner diameter
Bearing	42.0 (1.654)	28.9 (1.138)
Race	42.0 (1.654)	27.1 (1.067)

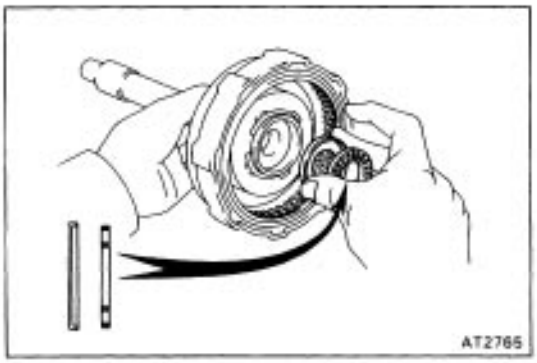

Bearing and race:

mm (in.)

	Outer diameter	Inner diameter
Bearing	36.1 (1.421)	22.2 (0.874)
Race	37.9 (1.492)	22.0 (0.866)

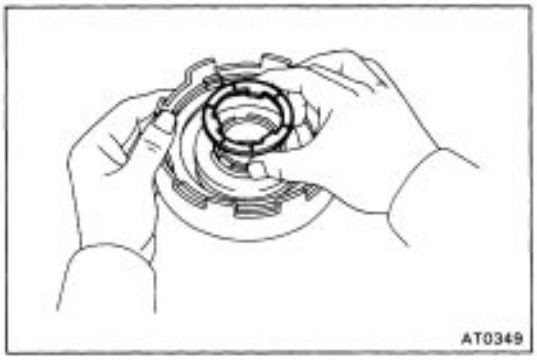

(b) Coat the clutch drum thrust washer with petroleum jelly and install it with the oil groove facing upward onto the direct clutch drum.

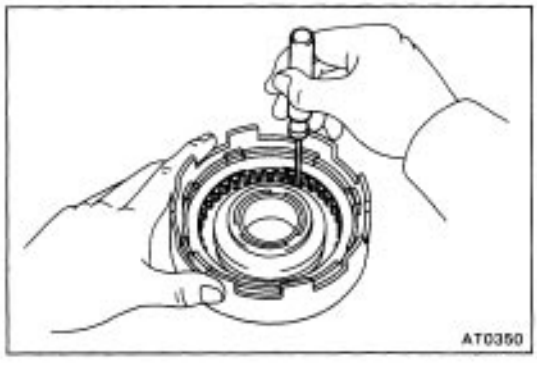

(c) Align the flukes of discs in the direct clutch.

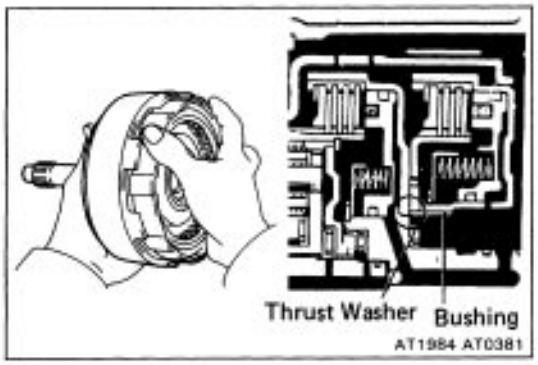

(d) Mesh the hub with the flukes of the direct clutch while turning the clutch drum or forward clutch.

(e) If the flukes of the discs are meshed with the hub correctly, the end of the bushing with the direct clutch drum will be flush with the surface of the forward clutch.

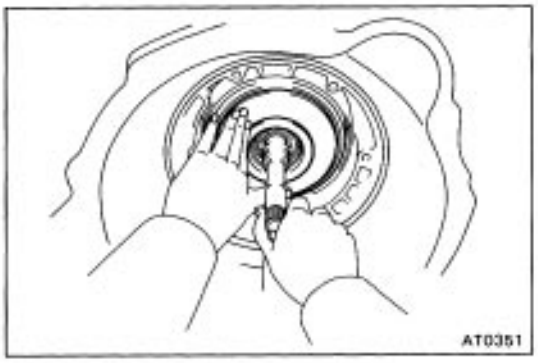

(f) Place the direct clutch and forward clutch into the case.

(g) Rotate the forward clutch to mesh the front planetary ring gear and discs.

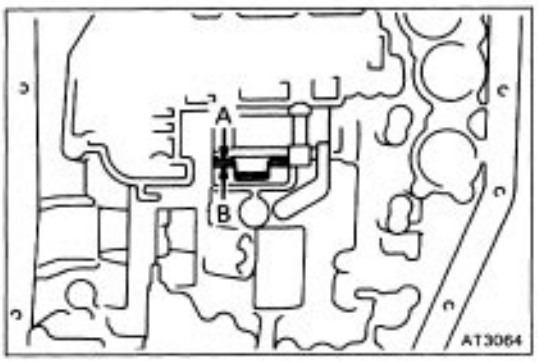

(h) Check the distance between the A and6 as shown in the illustration.
Distance: Approx. 3 mm (0.118 in.)

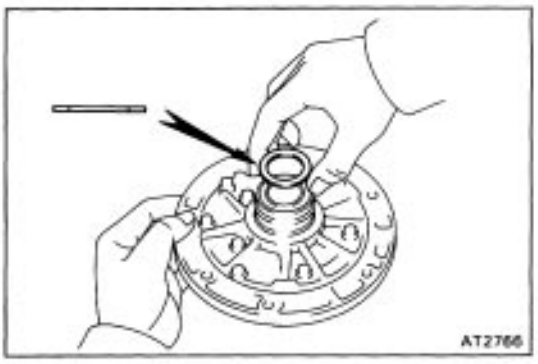

34. INSTALL OIL PUMP INTO CASE

(a) Coat the race with petroleum jelly and install it onto stator shaft.

Race: Outer diameter 43.0 mm (1.693 in.)
Inner diameter 30.5 mm (1.201 in.)

HINT: After installing the oil pump, measure the input shaft thrust play.
If the thrust play is in excess of standard, select and insert one of the two different size races.

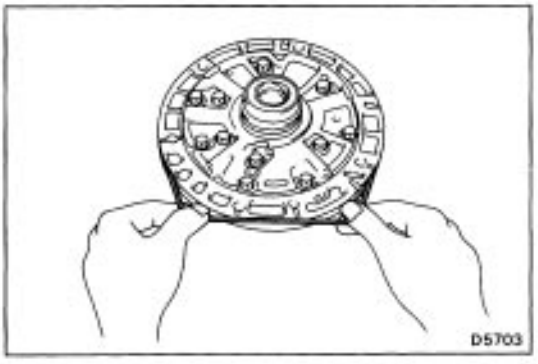

(b) Coat a new O–ring with ATF and install it to oil pump.

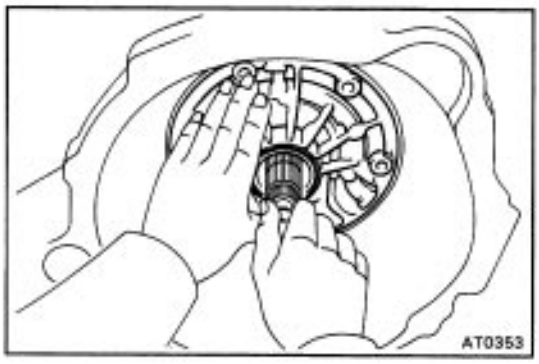

(c) Place the oil pump through the input shaft, and align the bolt holes of the pump body with the transmission case.

(d) Hold the input shaft, and lightly press the oil pump body to slide the oil seal rings on the stator shaft through the direct clutch drum.

NOTICE: Do not push on the oil pump strongly or the oil seal ring will stick to the direct clutch drum.

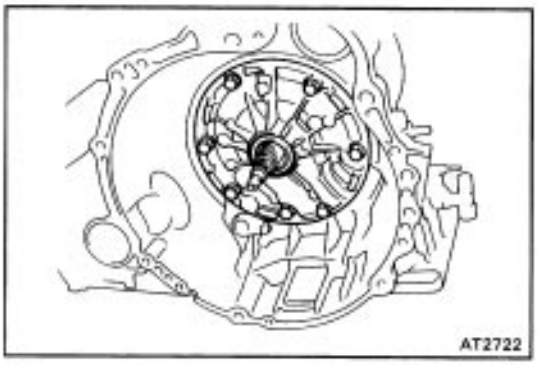

(e) Install and tighten the seven bolts.
Torque: 225 kg–cm (16 ft–lb, 22 N–m)

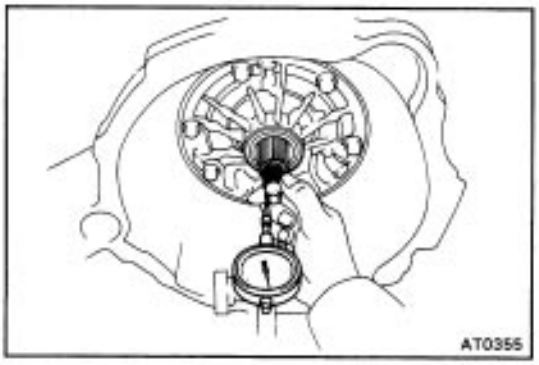

35. MEASURE THRUST PLAY OF INPUT SHAFT

Measure the thrust play with a dial gauge.
Thrust play: 0.3 – 0.9 mm (0.012 – 0.035 in.)
HINT: There are two thickness of races for the end of stator shaft. If necessary, select one of them.
Race thicknesses: 0.8 mm (0.031 in.)
1.4 mm (0.055 in.)

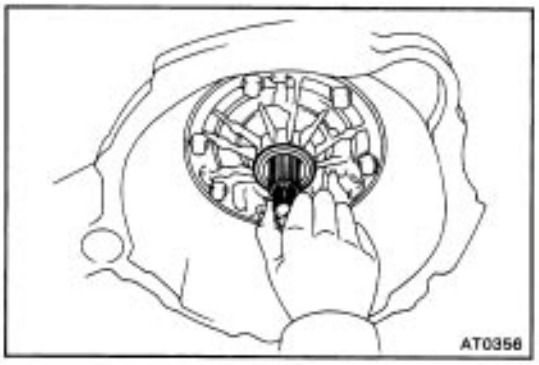

36. CHECK INPUT SHAFT ROTATION

Make sure that the input shaft rotates smoothly.

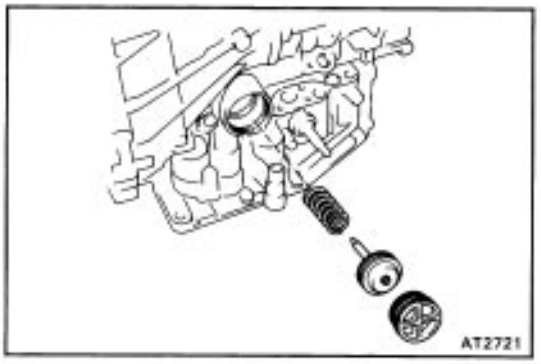

37. INSTALL SECOND COAST BRAKE PISTON

(a) Coat the new O–rings with ATF and install it to the cover.
(b) Install the outer spring with the piston.
(c) Place the cover into the bore.

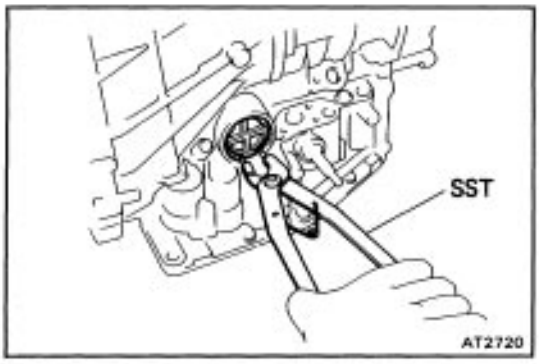

(d) Using SST, install the snap ring while pressing the cover.
SST 09350–32014 (09351–32050)

(e) Check that the front end of the piston rod contacts the center of the second brake band depression.

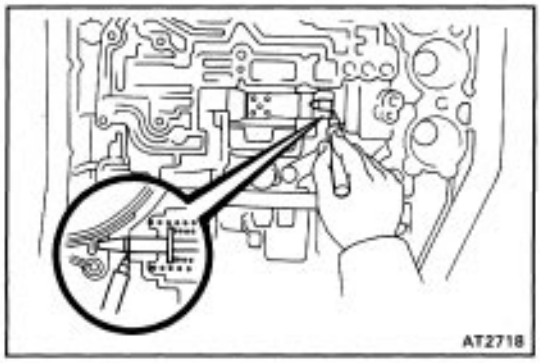

38. CHECK SECOND COAST BRAKE PISTON STROKE

(a) Apply a small amount of paint to the piston rod at the point it meets the case as shown in the illustration.

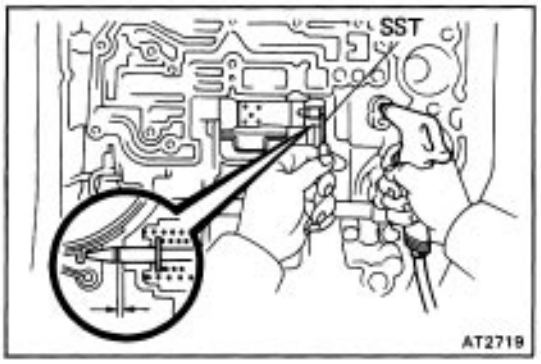

(b) Using SST, measure the piston stroke applying and releasing the compressed air (4 – 8 kg/cm2, 57 – 114 psi or 392 – 785 kPa) as shown.
SST 09240–00020

Piston stroke: 1.5 – 3.0 mm (0.059 – 0.118 in.)

If the stroke is more than specified, replace the piston rod with a longer one.

Piston rod length: 72.9 mm (2.870 in.)
71.4 mm (2.811 in.)

If it is still more than standard value, replace the brake band with a new one.

39. INSTALL ACCUMULATOR PISTONS AND SPRINGS

(a) Install the new O–rings to the piston.

(b) Install the springs and pistons into the bore.

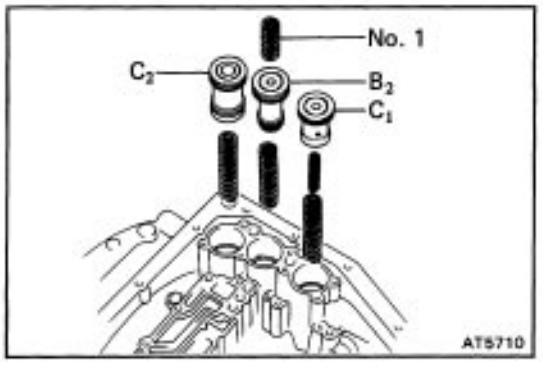

Spring		Free length mm (in.)	Color
C_1	Inner	48.00 (1.8898)	Red
	Outer	81.09 (3.1925)	Yellow Green
C_2		74.54 (2.9346)	Blue
B_2	No.1	35.18 (1.3850)	Yellow
	No.2	56.68 (2.2315)	Yellow

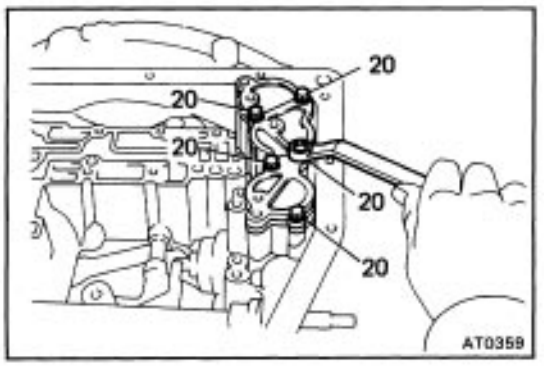

(c) Place the cover with a new gasket and gradually tighten the bolts a little a time in sequence.

HINT: Each bolt length (mm) is indicated in the figure.

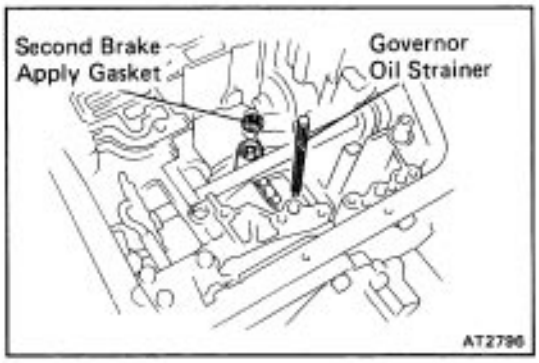

40. INSTALL SECOND BRAKE APPLY GASKET AND GOVERNOR OIL STRAINER

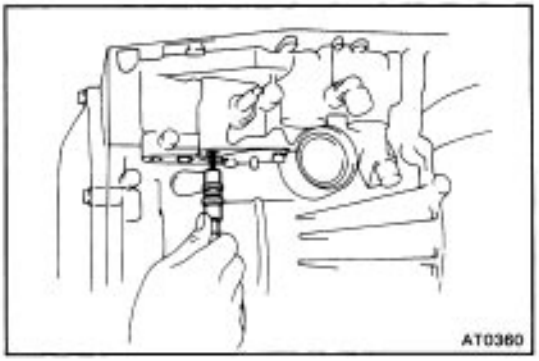

41. INSTALL THROTTLE CABLE IN CASE

Push the cable through the case, being careful not to damage the O–ring. Check for full seating.

NOTICE: In subsequent work, to avoid breaking the cable fitting do not roll the case over the cable.



42. PLACE VALVE BODY ON TRANSMISSION

(a) While holding the cam down with your hand, slip the cable end into the slot.

(b) Lower the valve body into place.

NOTICE: Do not entangle the kick–down switch wire or solenoid wire.

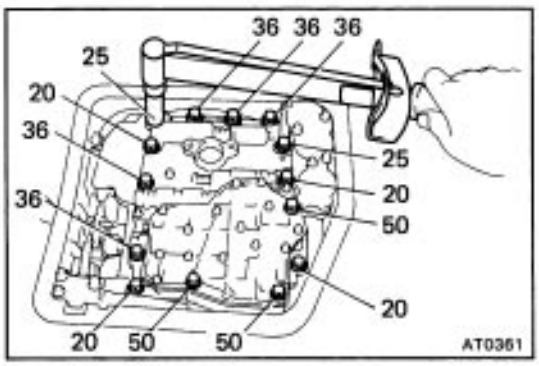

43. INSTALL BOLTS IN VALVE BODY

HINT: Each bolt length (mm) is indicated in the figure.

Hand tighten the fourteen bolts first, then torque with a torque wrench.

Torque: 100 kg–cm (7 ft–lb, 10 N–m)

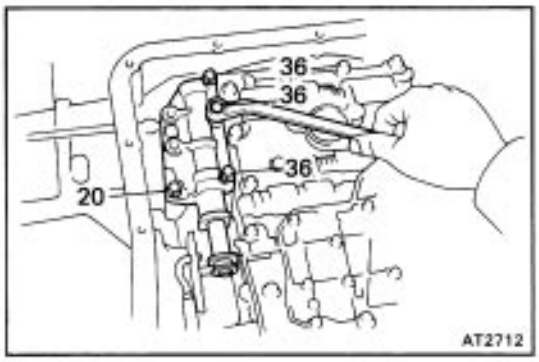

44. INSTALL MANUAL VALVE BODY AND DETENT SPRING

HINT: Each bolt length (mm) is indicated in the figure.

(a) Align the manual valve with the pin on the manual shaft lever.

(b) Lower the manual valve body into place.

(c) Hand tighten the four bolts first. Then, tighten them with a torque wrench.

Torque: 100 kg–cm (7 ft–lb, 10 N–m)

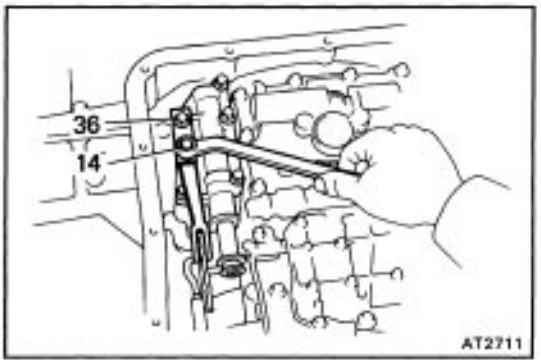

(d) Place the detent springs on the manual valve body and hand tighten the two bolts first. Then, tighten them with a torque wrench.

Torque: 100 kg–cm (7 ft–lb, 10 N–m)

(e) Check that the manual valve lever is touching the center of the detent spring tip roller.

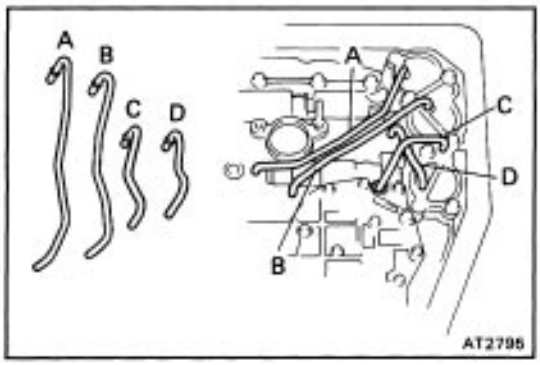

45. INSTALL OIL TUBES

Using a plastic hammer, install the tubes into the positions indicated in the figure.

NOTICE: Be careful not to bend or damage the tubes.

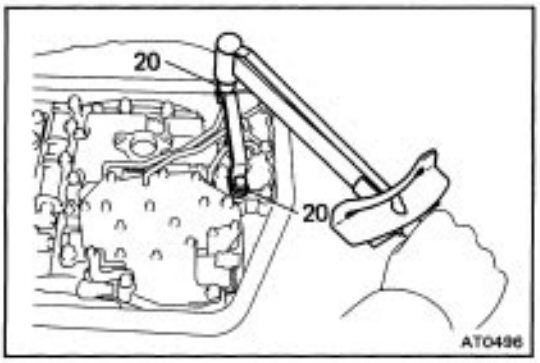

46. INSTALL TUBE BRACKET

Each bolt length (mm) is indicated in the figure.

Torque: 100 kg–cm (7 ft–lb, 10 N–m)

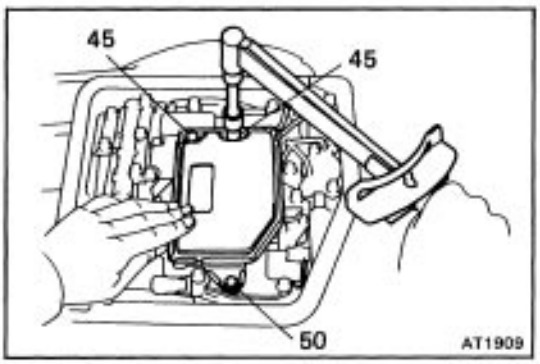

47. INSTALL OIL STRAINER

Each bolt length (mm) is indicated in the figure.

Torque: 100 kg–cm (7 ft–lb, 10 N–m)

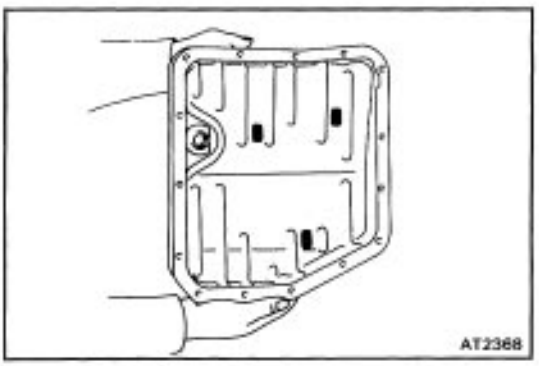

48. INSTALL MAGNETS IN PLACE AS SHOWN

NOTICE: Make sure that the three magnets do not interfere with the oil tubes.

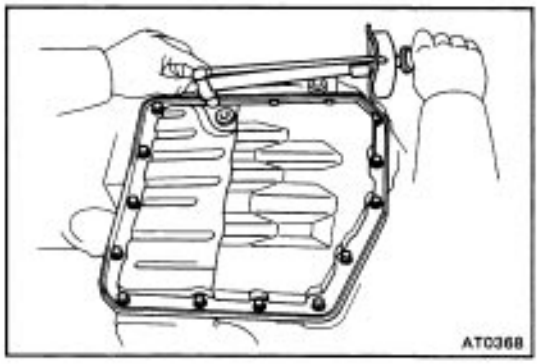

49. INSTALL OIL PAN WITH NEW GASKET

Torque: 50 kg–cm (43 in.–lb, 4.9 N–m)

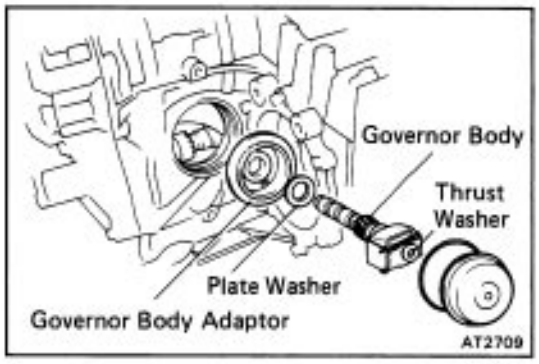

50. INSTALL GOVERNOR BODY

(a) Install the governor body adaptor.
(b) Install the governor body with the plate washer.
(c) Install the thrust washer onto the governor body.
(d) Install the new O–ring to the cover.

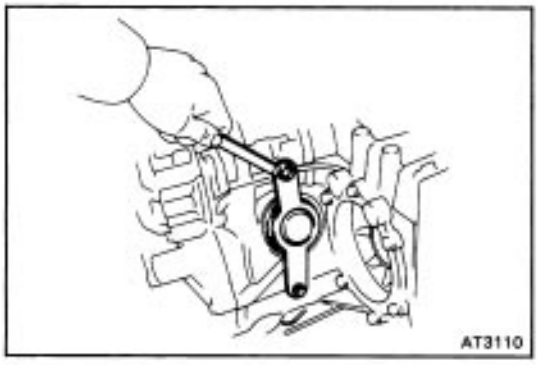

(e) Install the cover to the case.
(f) Install the cover bracket with two bolts.

Torque: 130 kg–cm (9 ft–lb, 13 N–m)

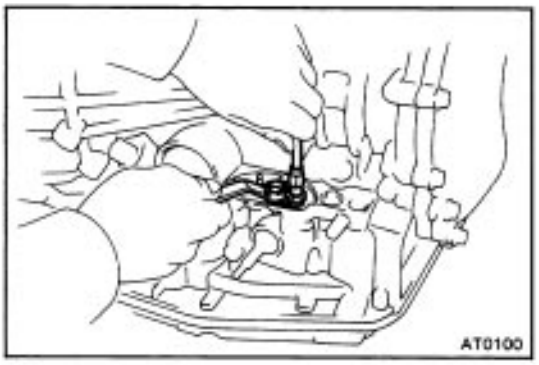

51. INSTALL THROTTLE CABLE RETAINING PLATE

52. INSTALL FILLER TUBE AND DIPSTICK

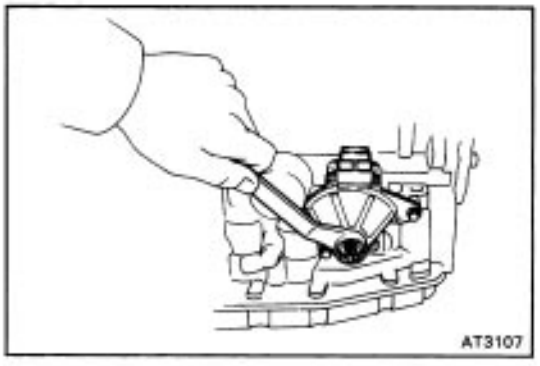

53. INSTALL NEUTRAL START SWITCH

(a) Install the neutral start switch to the manual valve shaft.
(b) Install the seal gasket and locking plate.
(c) Tighten the nut and stake it with the locking plate.

Torque: 70 kg–cm (61 in.–lb, 6.9 N–m)

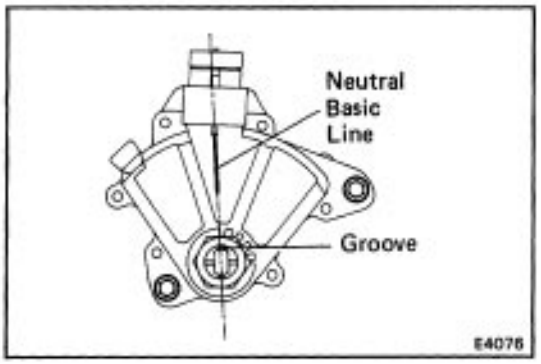

54. ADJUST NEUTRAL START SWITCH

(a) Align the groove and return neutral line.

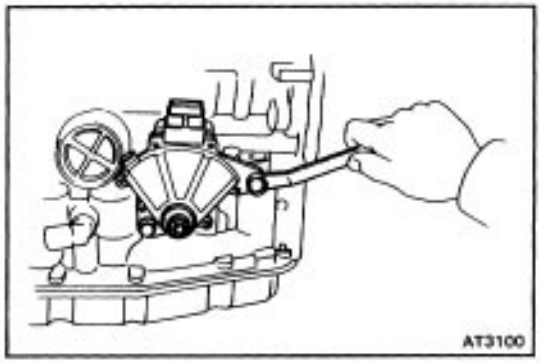

(b) Lock the switch with two bolts.

Torque: 55 kg–cm (4.8 in.–lb, 5.4 N–m)

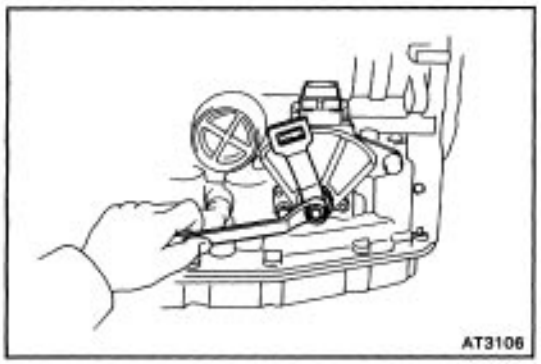

55. INSTALL MANUAL SHIFT LEVER

Torque: 130 kg–cm 19 ft–lb, 13 N–m)

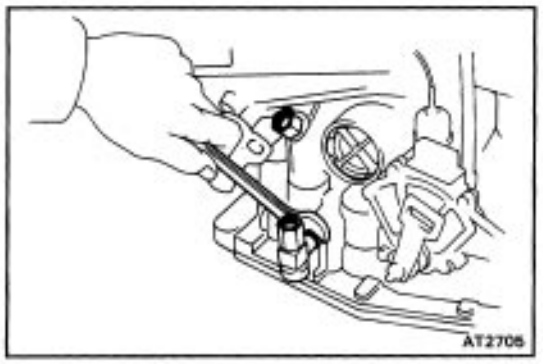

56. INSTALL OIL COOLER PIPES AND UNIONS

(a) Coat a new O–ring with ATF.

(b) Install the O–ring to the union.

(c) Install the union and pipe to the transmission case.

Torque: 275 kg–cm (20 ft–lb, 27 N–m)

INSTALLATION OF COMPONENT PARTS (A240L)

(See pages AT–64 to 66)

Disassembly, inspection and assembly of each component group have been indicated in the preceding chapter.

Before assembly, make sure again that all component groups are assembled correctly. If something wrong is found in a certain component group during assembly, inspect and repair this group immediately. Recommended

ATF: DEXRON© II.

GENERAL ASSEMBLY NOTES:

1. The automatic transmission is composed of highly precision–finished parts, necessitating careful inspection before assembly, because even a small nick could cause fluid leakage or affect performance.
2. Before assembling new clutch discs, soak them in automatic transmission fluid for at least two hours.
3. Apply automatic transmission fluid on the sliding or rotating surfaces of parts before assembly.
4. Use petroleum jelly to keep small parts in their place.
5. Do not use adhesive cements on gaskets and similar parts.
6. When assembling the transmission, be sure to use new gaskets and O–rings.
7. Dry all parts by blowing with compressed air. Never use shop rags.

8. Be sure to install the thrust bearings and races in the correct direction and position.

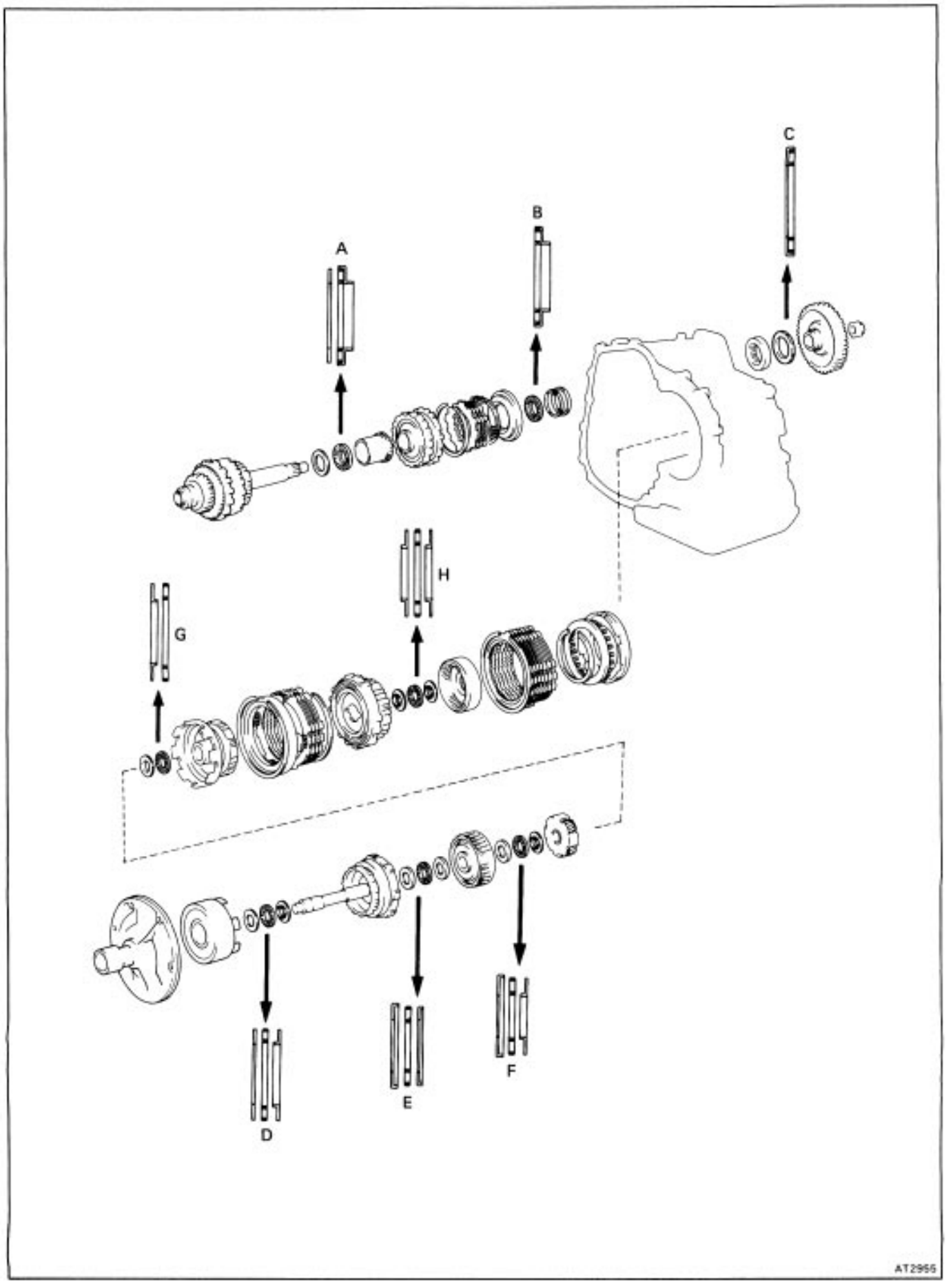

mm (in.)

		A	B	C	D	E	F	G	H
Front Bearing Race	Outer Diameter	41.8 (1.646)	–	–	43.0 (1.693)	37.9 (1.492)	←	45.0 (1.772)	37.3 (1.469)
	Inner Diameter	30.0 (1.181)	–	–	30.5 (1.201)	22.0 (0.866)	←	28.0 (1.102)	24.1 (0.949)
Thrust Bearing	Outer Diameter	45.2 (1.780)	←	57.7 (2.272)	42.0 (1.654)	36.1 (1.421)	←	45.0 (1.772)	37.6 (1.480)
	Inner Diameter	31.0 (1.220)	←	41.0 (1.614)	28.9 (1.138)	22.2 (0.874)	←	30.0 (1.181)	24.0 (0.945)
Rear Bearing Race	Outer Diameter	–	–	–	42.0 (1.654)	35.7 (1.406)	35.0 (1.378)	–	37.6 (1.480)
	Inner Diameter	–	–	–	27.1 (1.067)	23.0 (0.906)	19.0 (0.748)	–	22.2 (0.874)

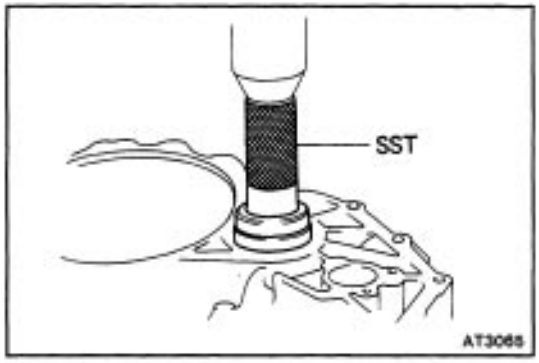

1. INSTALL BEARING TO TRANSAXLE HOUSING

(a) Using SST and a press, press the bearing into the transaxle housing.
SST 09350–32014 (09351–32140)

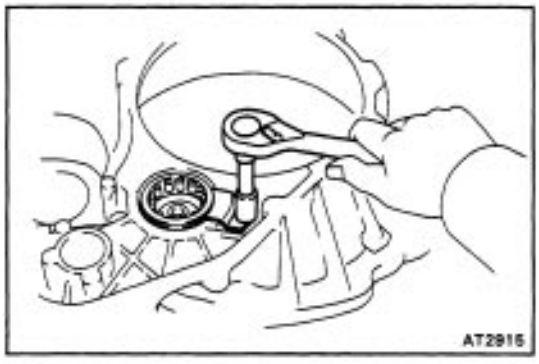

(b) Install the bearing stopper with a bolt.

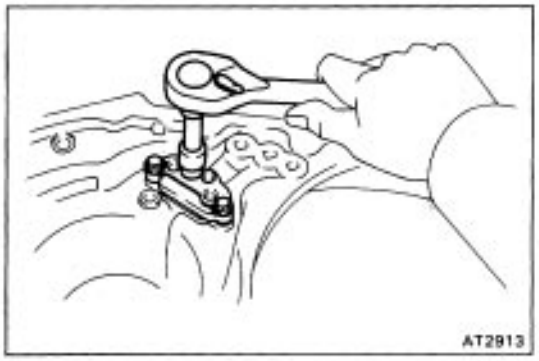

2. INSTALL GASKET AND OIL TUBE APPLY COVER

Install the new gasket and oil tube apply cover, and tighten the three bolts.

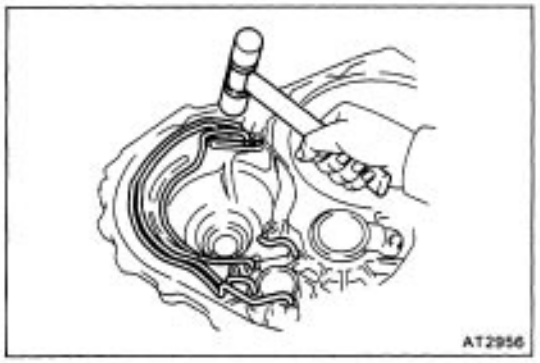

3. INSTALL OIL TUBES

(a) Using a plastic hammer, install the four oil tubes.

NOTICE: Be careful not to bend or damage the tubes.

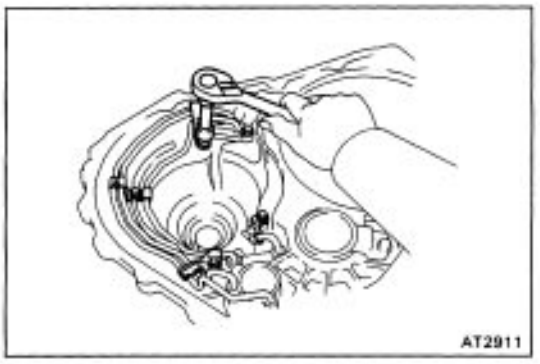

(b) Install the four tube clamps.

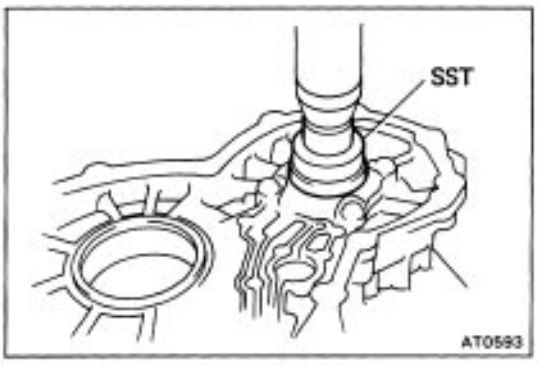

4. INSTALL BEARING TO TRANSMISSION CASE

Using SST and a press, press the bearing into the transmission case.

SST 09350–32014 (09351–32090)

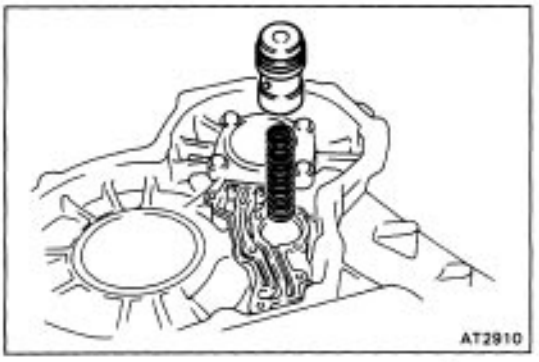

5. INSTALL B4 ACCUMULATOR PISTON AND SPRING

6. INSTALL OIL GALLERY COVER AND GASKET

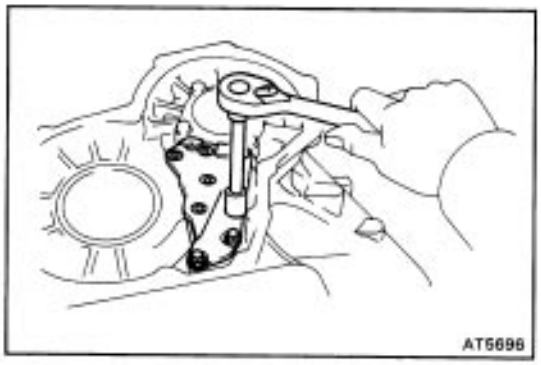

(a) Clean the threads of the screws and case with white gasoline.
(b) Install the new gasket and oil gallery cover in place.
(c) Install and tighten the three bolts.

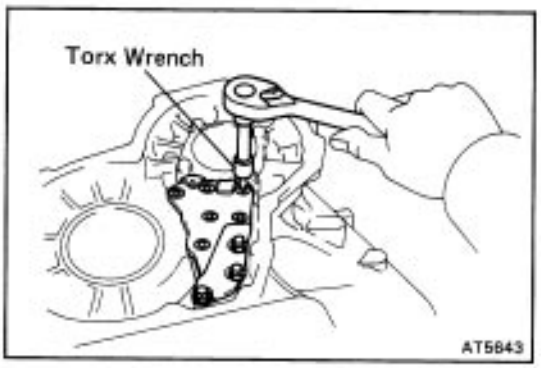

(d) Apply seal packing or equivalent to the six screws.
Seal packing: Part No.08833–00070, THREE BOND 1324 or equivalent
(e) Using a torx wrench, install and tighten the six screws.

7. INSTALL MANUAL VALVE SHAFT AND LEVER

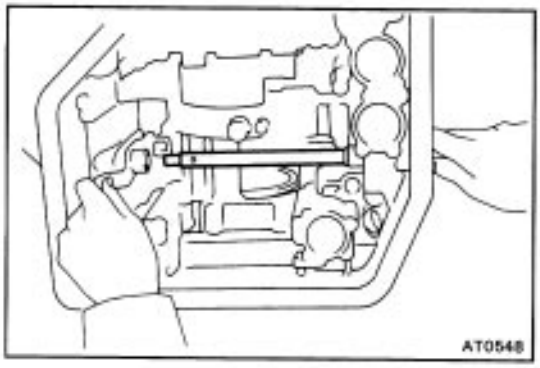

(a) Install the parking lock rod to the manual valve lever.
(b) Slide in the shaft and install the washer, new spacer and manual lever.

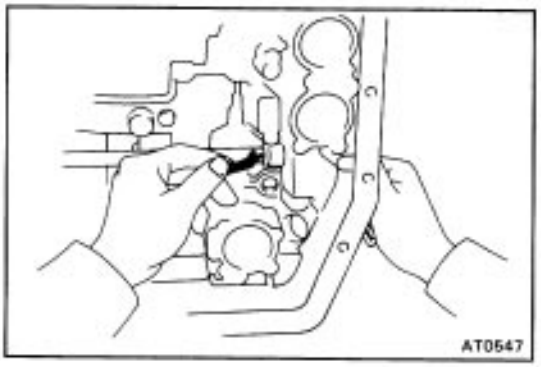

(c) Install the retaining spring.
HINT: Make sure there is a washer between the retaining spring and case.

8. INSTALL PIN

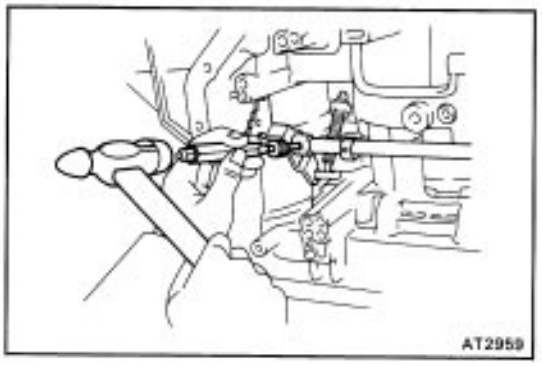

(a) Using a punch and hammer, drive in the pin.
(b) Position the spacer and stake it.

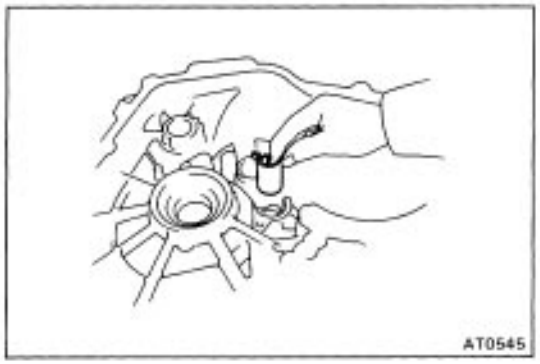

9. INSTALL CAM GUIDE BRACKET

Install the cam guide bracket and then insert the parking lock rod into the guide bracket.

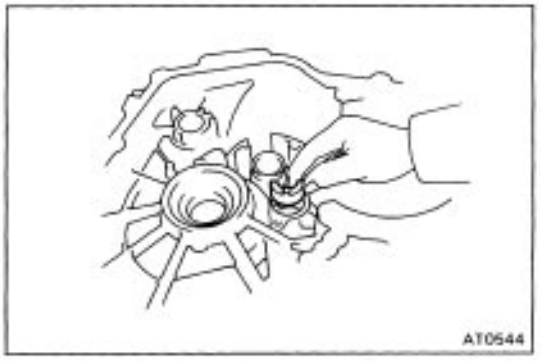

10. INSTALL PARKING LOCK SLEEVE

Install the parking lock sleeve protruding portion upward.

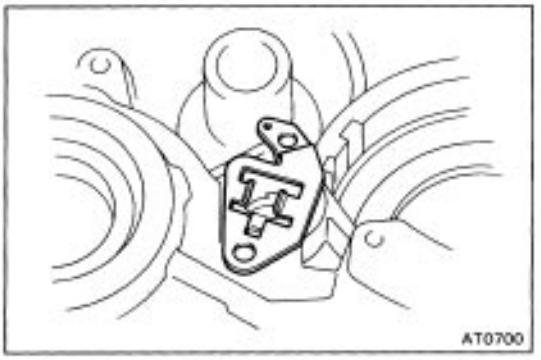

11. PLACE STOPPER PLATE

Place the stopper plate on the protruding portion of lock sleeve.

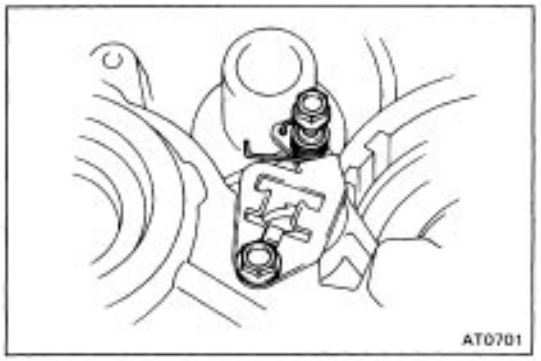

12. INSTALL GUIDE SLEEVE AND SPRING

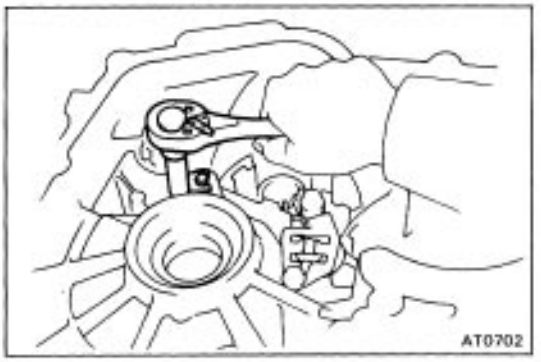

13. INSTALL PARKING LOCK PAWL, PAWL SHAFT AND SHAFT CLAMP

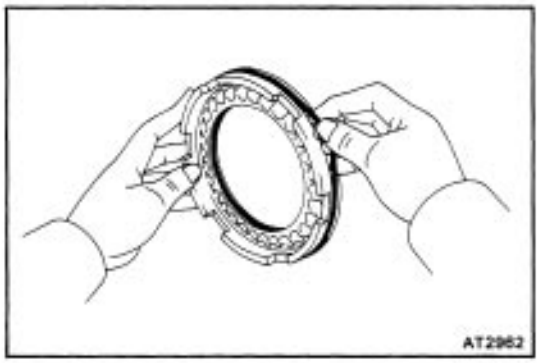

14. INSTALL FIRST AND REVERSE BRAKE PISTON

(a) Install the two new O–rings to the piston.
(b) Coat the O–rings with ATF.

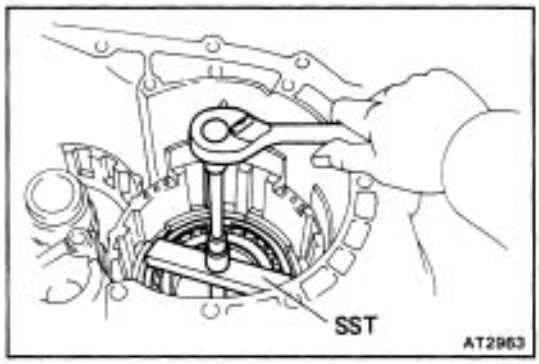

(c) Place the piston into the bore of the case, facing the spring seats upward.
(d) Using SST, press in the piston.
SST 09350–32014 (09351–32040)
HINT: Be careful not to damage the O–rings.
(e) Remove SST.

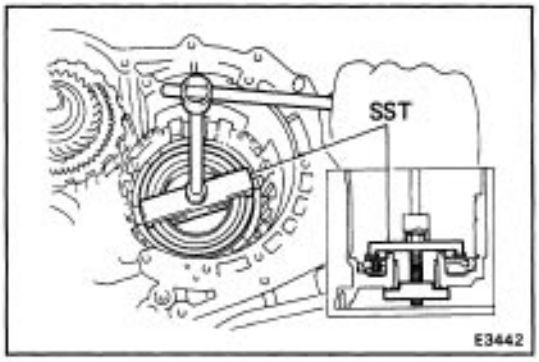

15. INSTALL PISTON RETURN SPRING AND SNAP RING

(a) Install the piston return spring assembly and snap ring in place.
(b) Set SST, and tighten the bolt gradually to compress the springs.
SST 09350–32014 (09351–32040)

NOTICE: Avoid bending the spring retainer by overtightening the bolt.

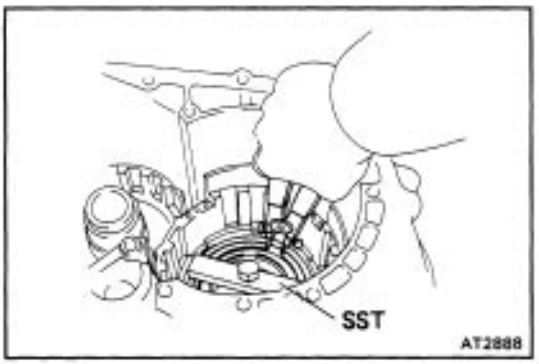

(e) Using snap ring pliers, install the snap ring.
HINT: Visually check to make sure it is fully seated and centered by the three lugs on the spring retainer.
Be sure the end gap of snap ring is not aligned with the spring retainer claw.
(d) Remove SST.
SST 09350–32014 (09351–32040)

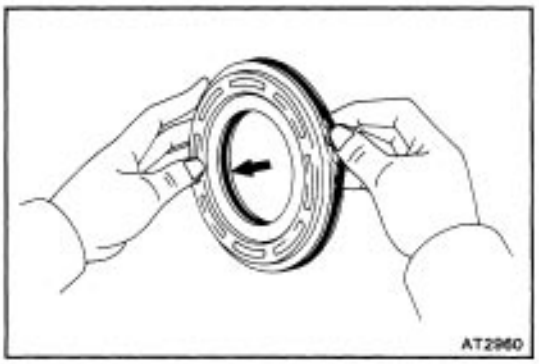

16. INSTALL UNDERDRIVE BRAKE PISTON

(a) Coat the O–rings with ATF.
(b) Install the two new O–rings to the piston.

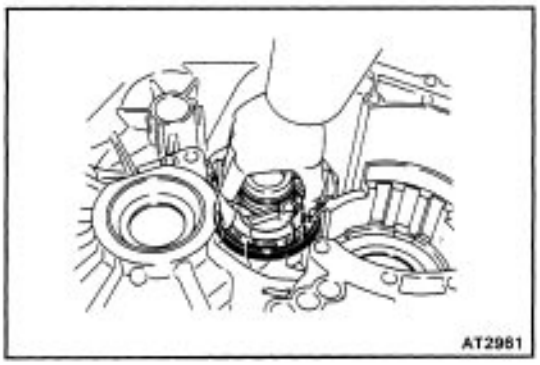

(c) Place the piston into the case with the cup side up, being careful not to damage the O–rings.

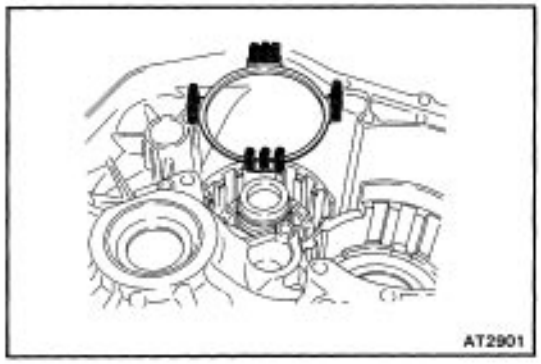

17. INSTALL RETURN SPRING

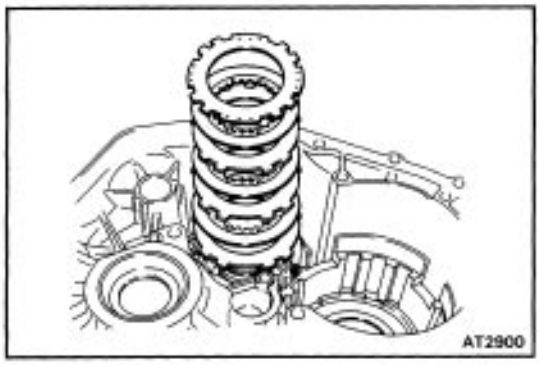

18. INSTALL PLATES, DISCS AND FLANGE

(a) Install in order: D = Disc P = Plate F = Flange
P–D –P–D –P–D –F

HINT: Install the flange with the flat end facing downward.

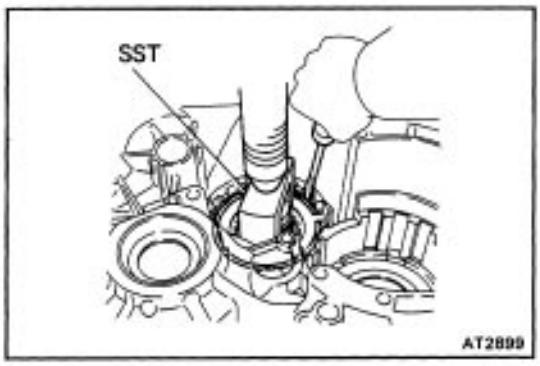

(b) Place SST on the flange, and compress the flange with a press.
SST 09350–32014 (09351–32070)

(c) Install the snap ring.

HINT: Be sure the end gap of the snap ring is not aligned with one of the cutouts.

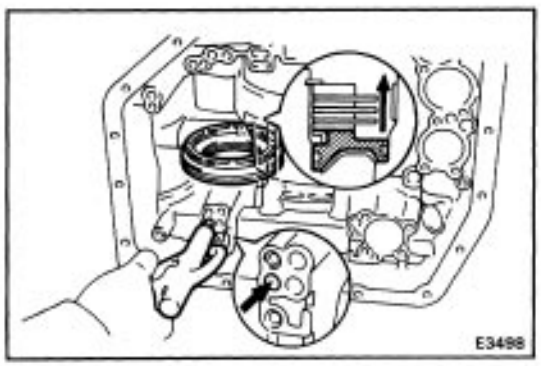

19. CONFIRM THAT UNDERDRIVE BRAKE PISTON MOVES

Using compressed air, confirm that the underdrive brake piston moves smoothly.

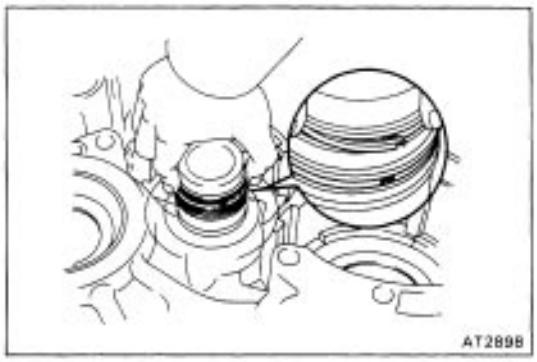

20. INSTALL OIL SEAL RINGS TO TRANSMISSION CASE

Install the two oil seals to the transmission case.

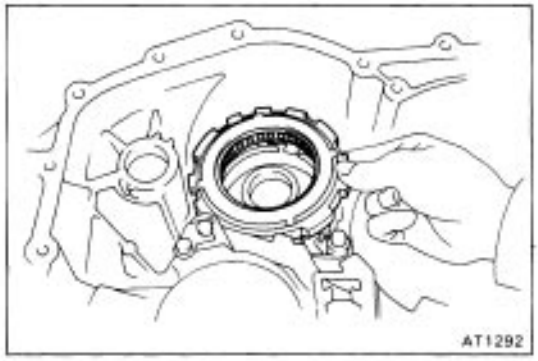

21. INSTALL UNDERDRIVE ONE–WAY CLUTCH

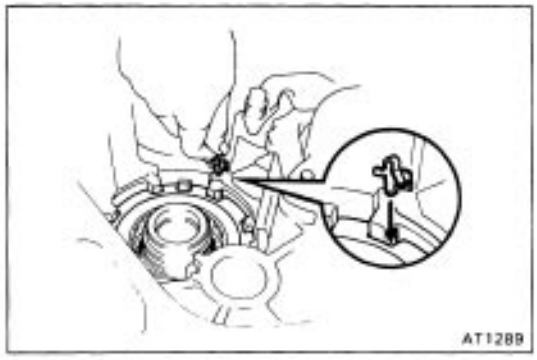

22. INSTALL ANTI–RATTLE CLIP

In the place shown in the figure (the space between the one–way clutch outer race and case), push the anti–rattle clip in until you hear the ”click”.

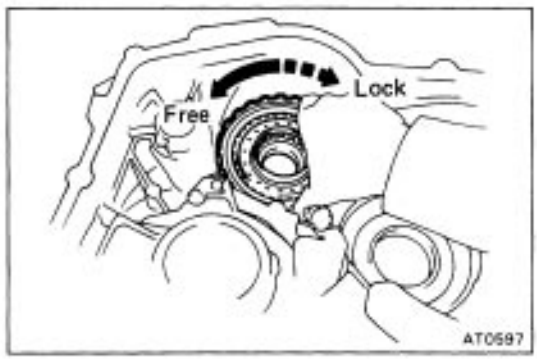

23. INSTALL UNDERDRIVE CLUTCH ASSEMBLY

(a) Align the flukes of discs in the underdrive brake.
(b) Install the clutch assembly.
(c) Turn the clutch assembly. The clutch assembly should turn freely counterclockwise and should lock clockwise.

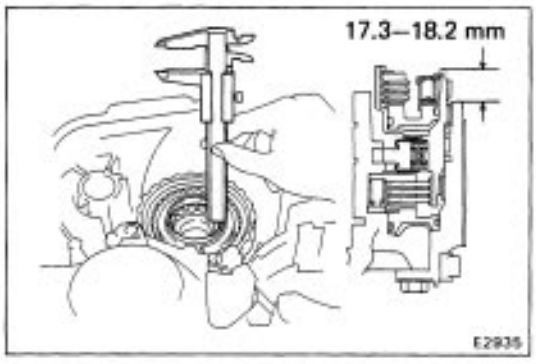

24. CHECK HEIGHT OF CLUTCH ASSEMBLY

Using vernier calipers, check the height from the sleeve to the inner race.

Height: 17.3 – 18.2 mm (0.681 – 0.717 in.)

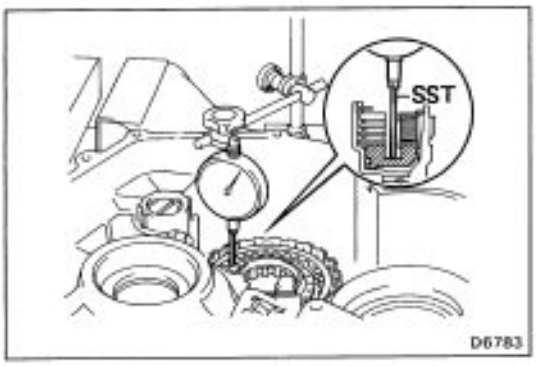

25. CHECK PISTON STROKE OF UNDERDRIVE CLUTCH

(a) Set a dial indicator (long type pick or SST) as shown.
SST 09350–32014 (09351–32190)

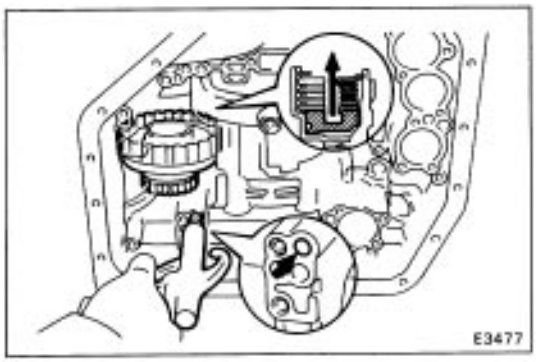

(b) Applying and releasing the compressed air (4 – 8 kg /cm2, 57 – 114 psi, 392 – 785 kPa), measure the underdrive clutch piston stroke.
Piston stroke: 1.50 – 1.86 mm (0.0591 – 0.0732 in.)
If the piston stroke is less than limit, parts may have been misassembled. Check them.
If the piston stroke is nonstandard, select another flange.

HINT: There are two different flange thicknesses.
Flange thickness: 2.04 mm (0.0803 in.)
2.40 mm (0.0945 in.)

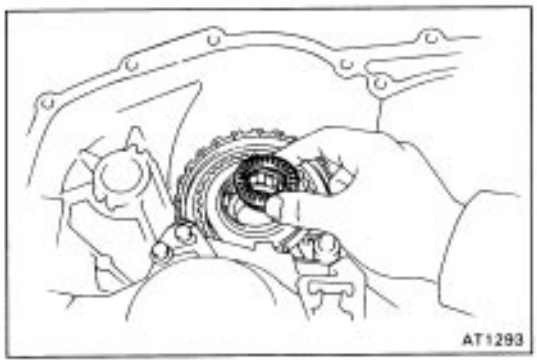

26. INSTALL BEARING WITH RACE

Install the thrust bearing with race, with the bearing facing upward.
Bearing: Outer diameter 43.7 mm (1.720 in.)
Inner diameter 31.0 mm (1.220 in.)

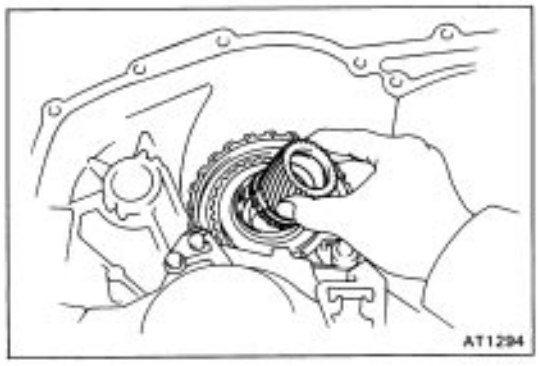

27. INSTALL SUN GEAR TO CASE

Install the sun gear of the counter shaft to the case.

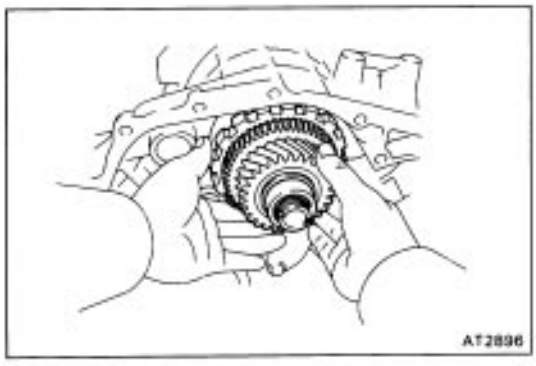

28. INSTALL COUNTER SHAFT ASSEMBLY

(a) Align the flukes of the discs in the underdrive clutch.
(b) Install the counter shaft assembly.

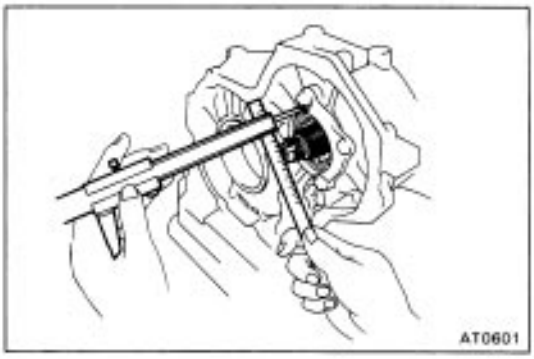

29. CHECK HEIGHT OF COUNTER SHAFT

Using vernier calipers, measure the distance between the tip of the counter shaft and bolt seat of the clutch support.

Height: 33.3 – 35.5 mm (1.311 – 1.398 in.)

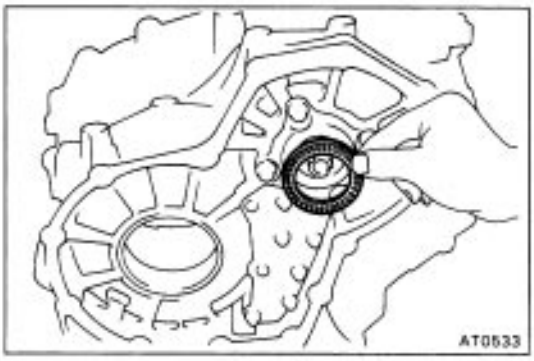

30. INSTALL THRUST NEEDLE BEARING

Bearing: Outer diameter 57.7 mm (2.272 in.)
Inner diameter 41.0 mm (1.614 in.)

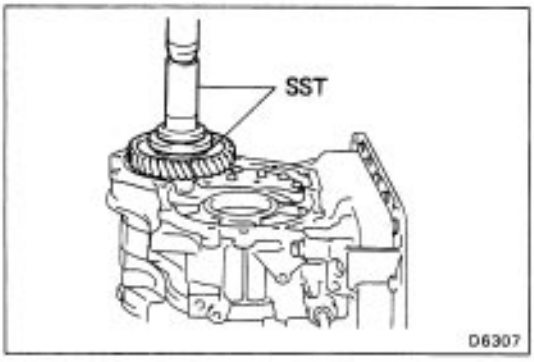

31. INSTALL COUNTER DRIVEN GEAR

Using SST and press, press in the driven gear.
SST 09350–32013 (09351–32100, 09351–32140)

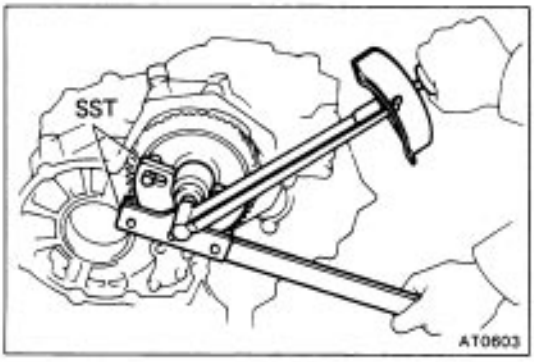

32. TIGHTEN NEW LOCK NUT

(a) Using SST to hold the driven gear, tighten a new lock nut.
SST 09330–00021 and 09350–32014 (09351–32031)
Torque: 1,600 kg–cm (1116 ft–lb, 157 N–m)
(b) Remove SST.

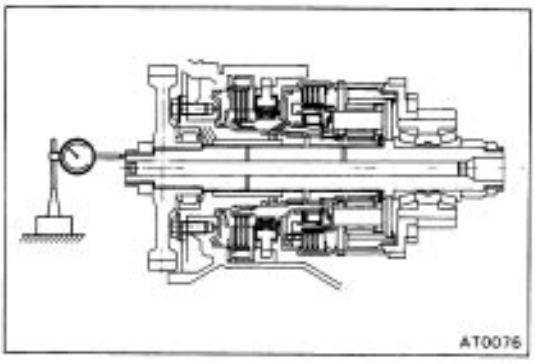

33. CHECK END PLAY OF COUNTER SHAFT

Using a dial indicator, measure the end play of the counter shaft.

End play: 0.23 – 0.89 mm (0.0091 – 0.0350 in.)

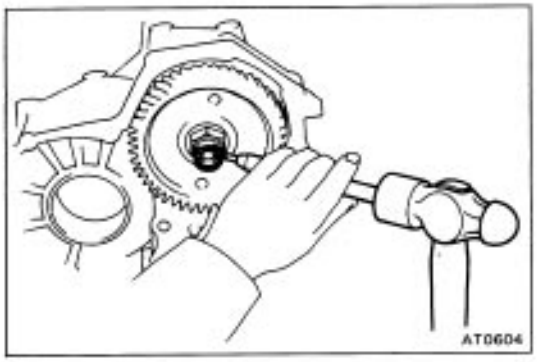

34. STAKE LOCK NUT

Using a punch and hammer, stake the lock nut.

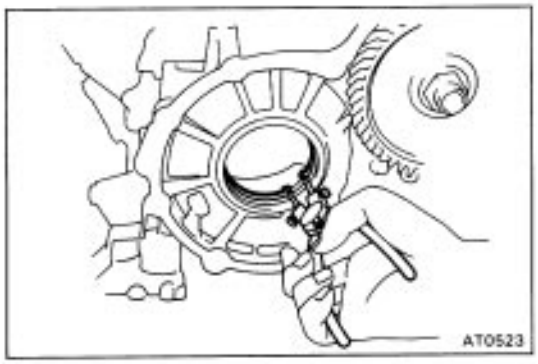

35. INSTALL SNAP RING TO TRANSMISSION CASE

Using snap ring pliers, install the snap ring to the transmission case.

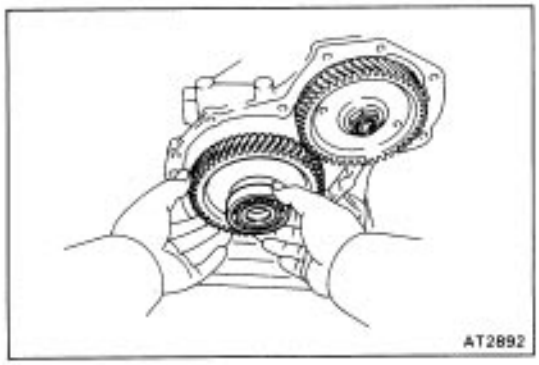

36. INSTALL INTERMEDIATE SHAFT

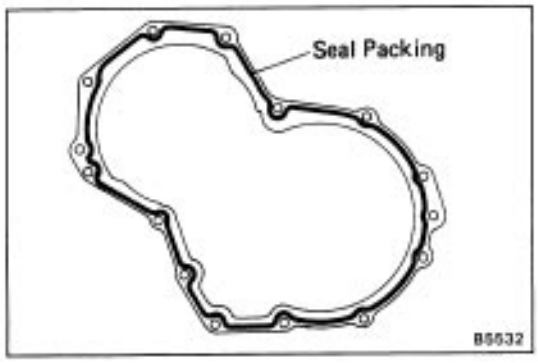

37. INSTALL TRANSAXLE REAR COVER

(a) Remove any packing material and be careful not to get oil on the contacting surfaces of the transaxle rear cover or transmission case.

(b) Apply seal packing to the rear cover as shown.

Seal packing: Part No.08833–00090, THREE BOND 1131, LOCTITE 518 or equivalent

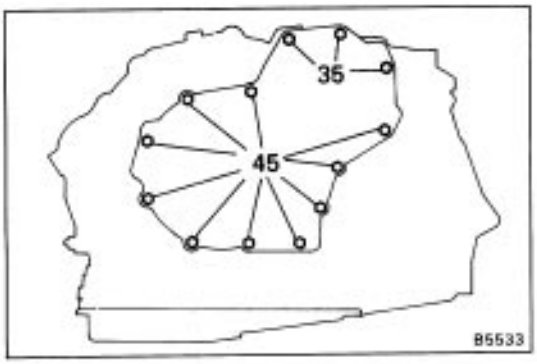

(c) Install and tighten the thirteen bolts.

Torque: 300 kg–cm (22 ft–lb, 29 N –m)

HINT: Each bolt length (mm) is indicated in the figure.

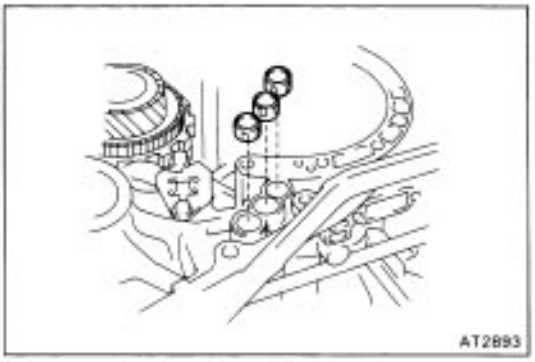

38. INSTALL NEW APPLY GASKETS

Install the three new apply gaskets.

HINT: The oil seal may be inserted with either end up or down.

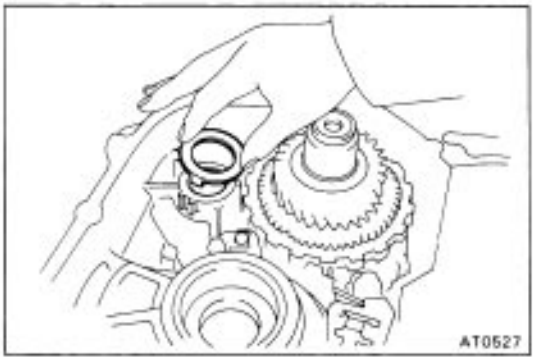

39. INSTALL GOVERNOR DRIVEN GEAR

(a) Install the thrust washer.

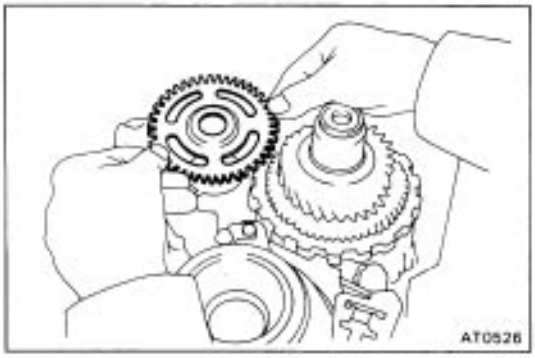

(b) Install the governor driven gear.

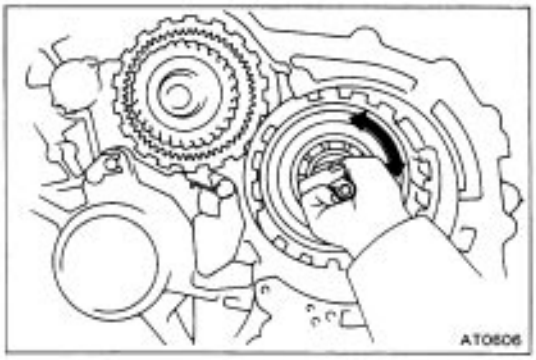

40. CHECK INTERMEDIATE SHAFT

Make sure that the intermediate shaft turns smoothly.

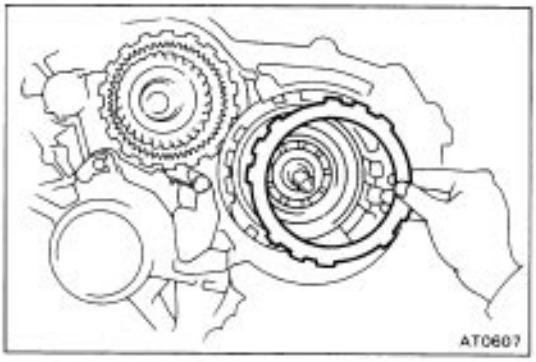

41. INSTALL DISCS, PLATES AND FLANGE

(a) Install the inner flange, facing the flat end upward.

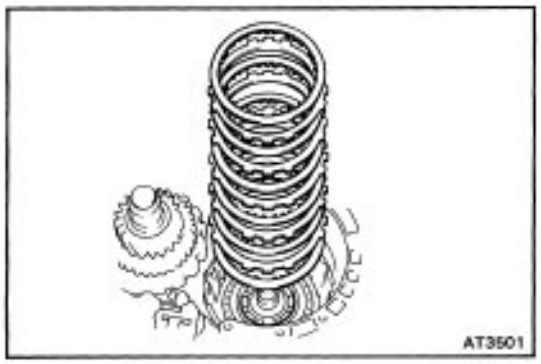

(b) Install in order: D = Disc P = Plate
D –P–D –P–D –P–D –P–D –P–D

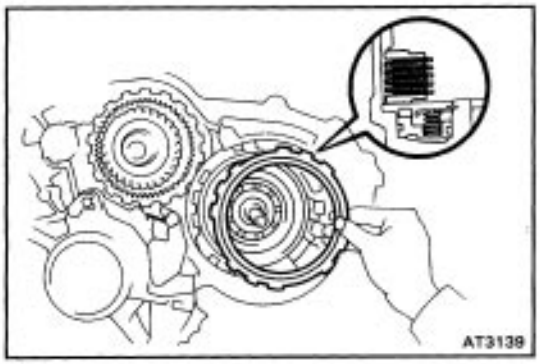

(c) Install the outer flange, the flat end facing downward.

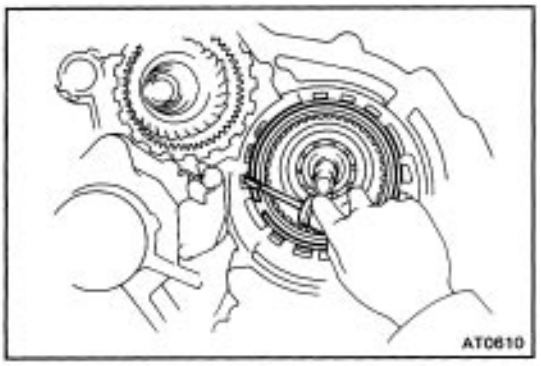

42. INSTALL SNAP RING

HINT: Be sure the snap ring end gap is not aligned with one of the cutouts.

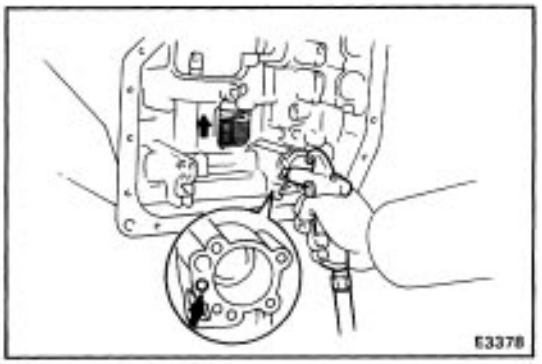

43. CONFIRM THAT FIRST AND REVERSE BRAKE PISTON MOVES

Using compressed air, confirm that the first and reverse brake piston moves smoothly.

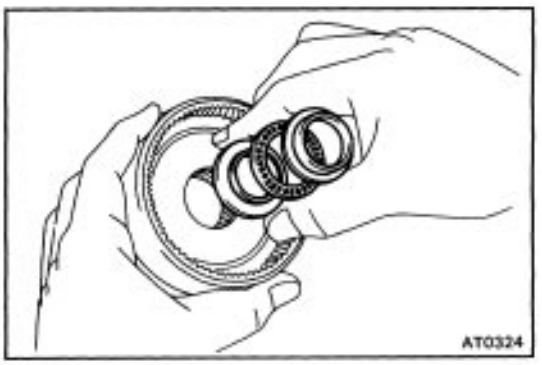

44. INSTALL REAR PLANETARY RING GEAR TO CASE

(a) Coat the races and bearing with petroleum jelly, and install them onto the ring gear as shown.

Bearing and races: mm (in)

	Outer diameter	Inner diameter
Front Race	37.3 (1.469)	24.1 (0.949)
Bearing	37.6 (1.480)	24.0 (0.945)
Rear Race	37.6 (1.480)	22.0 (0.874)

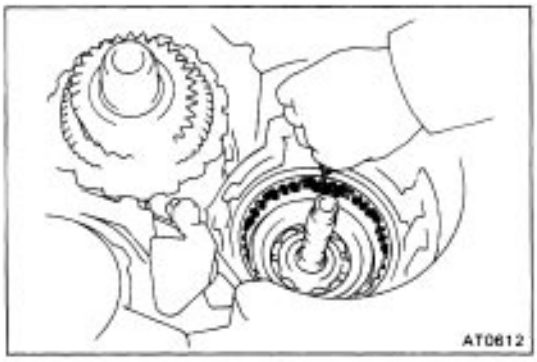

(b) Using a screwdriver, align the flukes of the discs.

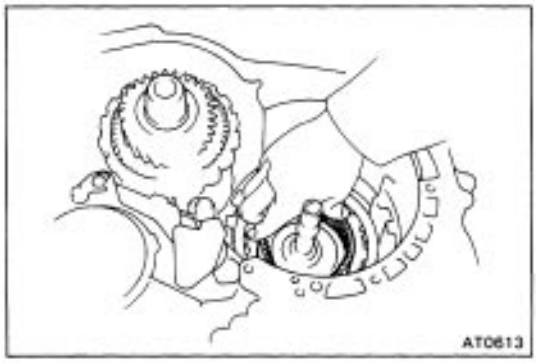

(c) Install the rear planetary ring gear into the case.

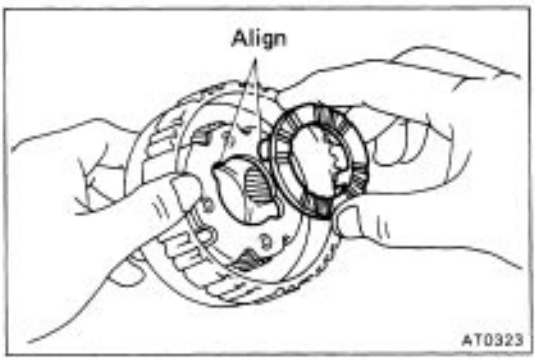

45. INSTALL REAR PLANETARY GEAR

(a) Coat thrust washer with petroleum jelly and install it onto the planetary gear.

HINT: Make sure that the different lug shapes match the openings on the gear.

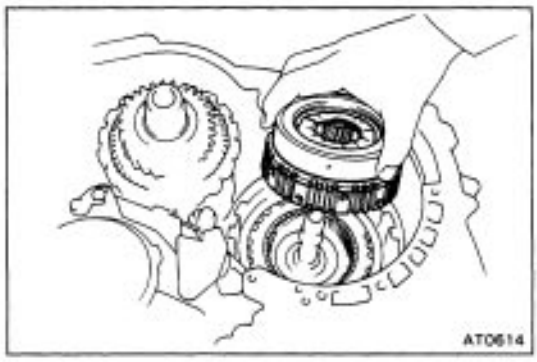

(b) Align the spline of the planetary gear with the flukes of the discs and install the planetary gear into the first and reverse brake discs.

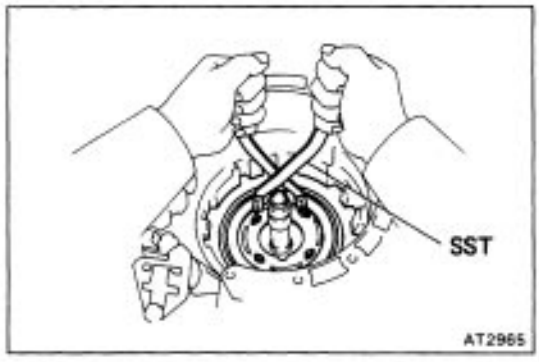

46. INSTALL NO.2 ONE–WAY CLUTCH

(a) Place the one–way clutch into the case, the shiny side facing upward.

(b) Install the one–way clutch onto the inner race while turning the planetary gear clockwise with SST.
SST 09350–32014 (09351–32050)

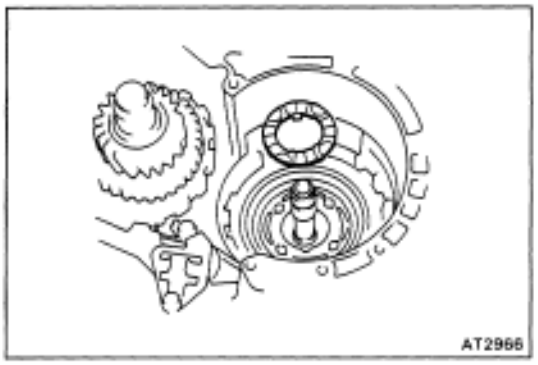

(c) Coat the thrust washer with petroleum jelly and install it onto the planetary gear.

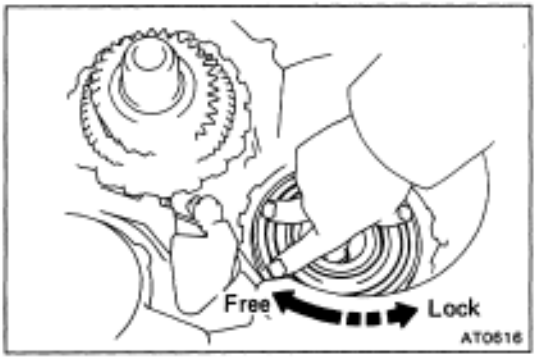

47. CHECK OPERATION OF NO.2 ONE–WAY CLUTCH

Check that the planetary gear turns freely clockwise and locks counterclockwise.

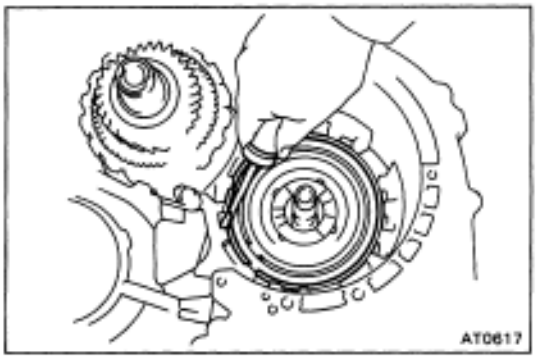

48. INSTALL SNAP RING

Be sure the end gap of the snap ring is not aligned with one of the cutouts.

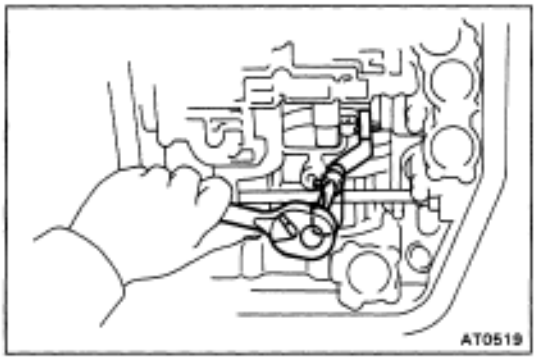

49. INSTALL SECOND COAST BRAKE BAND GUIDE

Install the band guide so that its tip touches the case.

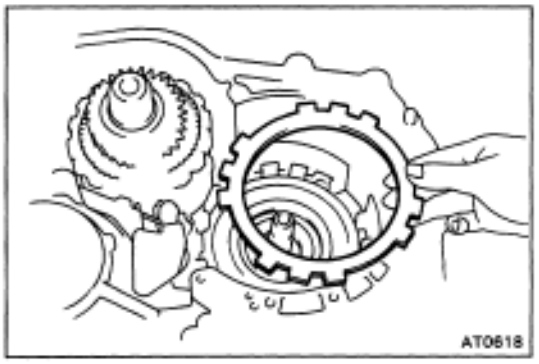

50. INSTALL SECOND BRAKE INTO CASE

(a) Install the flange, the flat side facing upward.

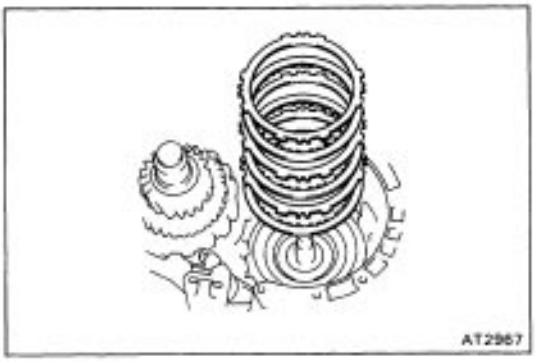

(b) Install the discs and plates in order.
D = Disc P = Plate
D –P–D –P–D –P

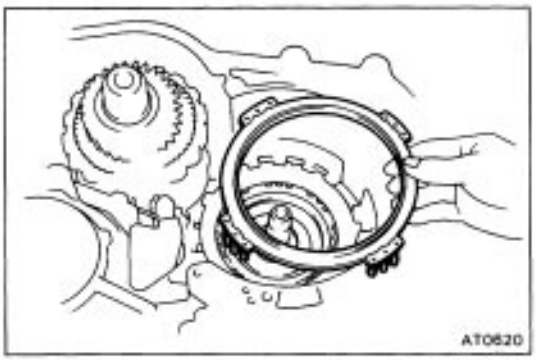

51. INSTALL SECOND BRAKE PISTON RETURN SPRING

Install each of the springs over the protrusions in the case.

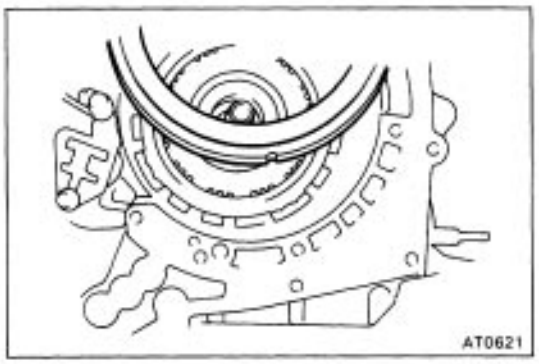

52. INSTALL SECOND BRAKE DRUM INTO CASE

Align the groove of the drum with the bolt and place it into the case.

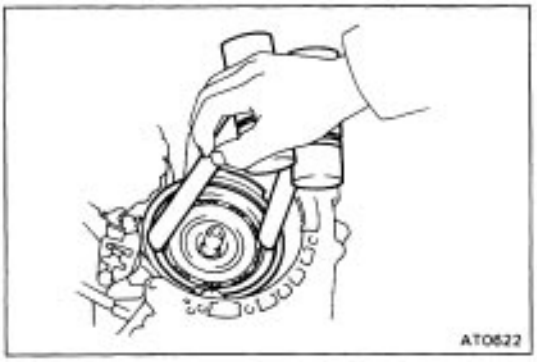

53. INSTALL SNAP RING

(a) Place the snap ring into the case so that the end gap is installed into the groove.
(b) While compressing the piston return springs over the drum with hammer handles, install the snap ring.

HINT: Be sure the end gap of the snap ring is not aligned with one of the cutouts.

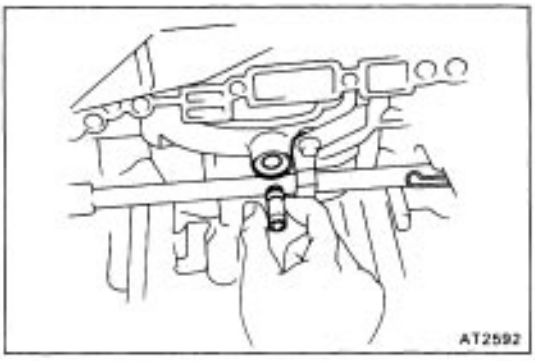

54. INSTALL SECOND BRAKE DRUM GASKET

Drive in a new drum gasket until it makes contact with the second brake drum.

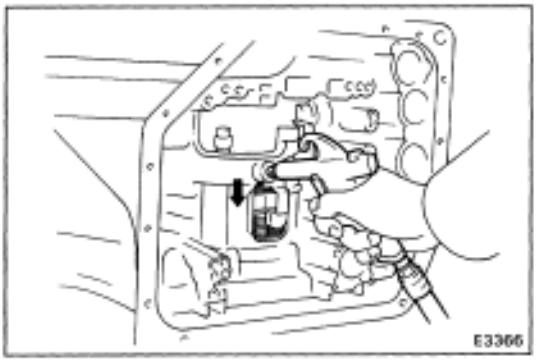

55. CONFIRM THAT SECOND BRAKE PISTON MOVES

Using compressed air, confirm that the second brake piston moves smoothly.

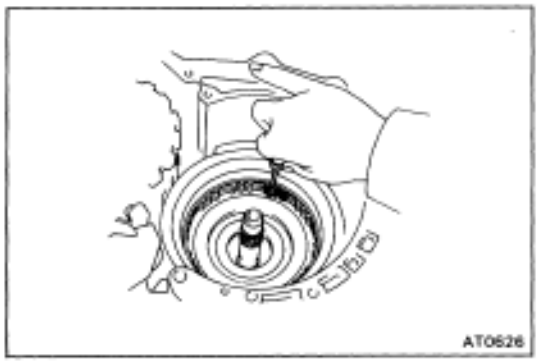

56. INSTALL SECOND BRAKE HUB AND NO. 1 ONE–WAY CLUTCH

(a) Using a screwdriver, align the flukes of the discs in the second brake.

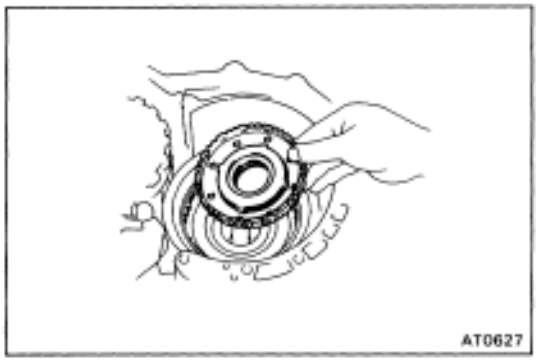

(b) Align the spline of the hub with the flukes of the discs and install the hub to the second brake discs.

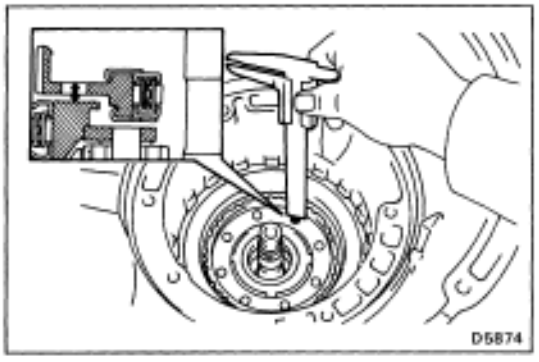

57. CHECK SECOND BRAKE HUB INSTALLATION DISTANCE

Check the distance between the surface of the second brake hub and rear planetary gear.

Distance: Approx. 5 mm (0.20 in.)

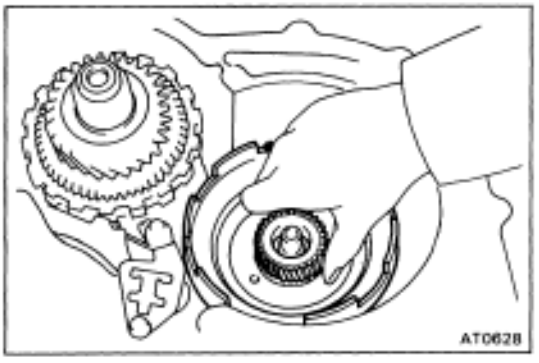

58. INSTALL SUN GEAR, SUN GEAR INPUT DRUM AND THRUST WASHER

While turning the sun gear clockwise, install it into the one–way clutch.

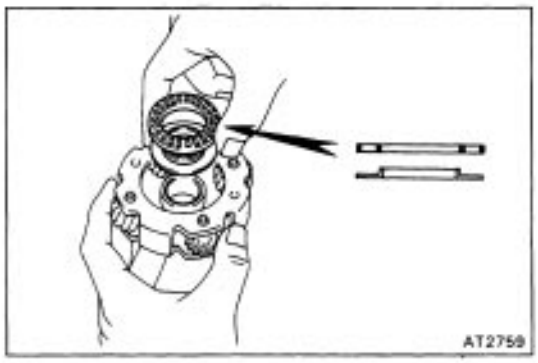

59. INSTALL FRONT PLANETARY GEAR

(a) Coat the race and bearing with petroleum jelly and install them onto the planetary gear.

Bearing and races: mm (in.)

	Outer diameter	Inner diameter
Race	45.0 (1.772)	28.0 (1.102)
Bearing	45.0 (1.772)	30.0 (1.181)

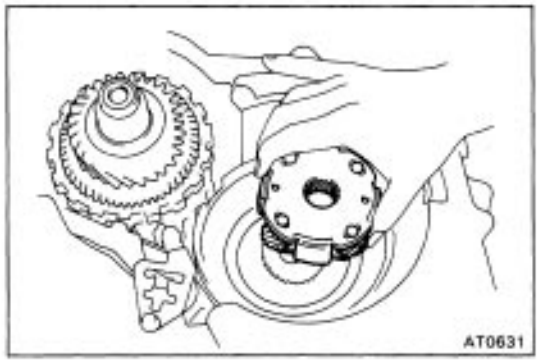

(b) Install the planetary gear.

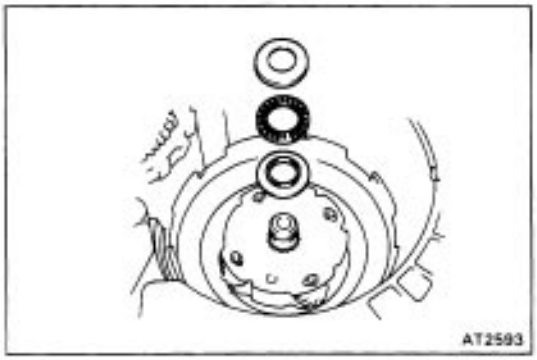

60. INSTALL FRONT PLANETARY RING GEAR

(a) Coat the races and bearing with petroleum jelly and install them onto the planetary ring gear.

Bearing and races: mm (in.)

	Outer diameter	Inner diameter
Front Race	37.9 (1.492)	22.0 (0.866)
Bearing	36.1 (1.421)	22.2 (0.874)
Rear Race	35.0 (1.378)	19.0 (0.748)

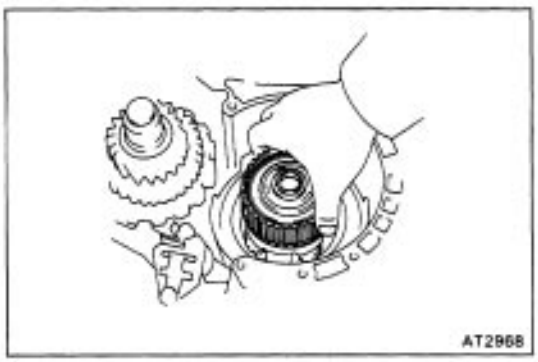

(b) Install the ring gear.

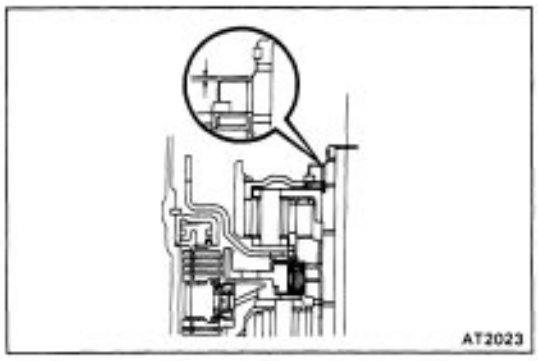

HINT: If the planetary ring gear and the other parts are installed correctly into the case, the end of the bushing with the ring gear flange will be flush with a shoulder of the intermediate shaft or under.

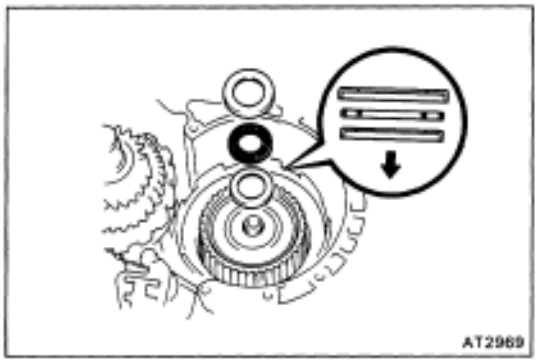

(c) Coat the races and bearing with petroleum jelly and install them onto the tip of ring gear flange as shown.
Bearing and races:

mm (in.)

	Outer diameter	Inner diameter
Front Race	37.9 (1.492)	22.0 (0.866)
Bearing	36.1 (1.421)	22.2 (0.874)
Rear Race	35.7 (1.406)	23.0 (0.906)

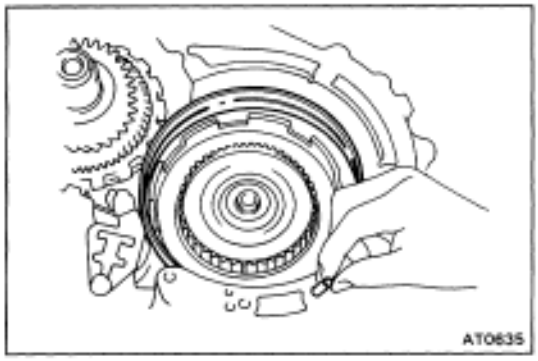

61. INSTALL SECOND COAST BRAKE BAND

(a) Place the band into the case.
(b) Install the pin through the oil pump mounting bolt hole.

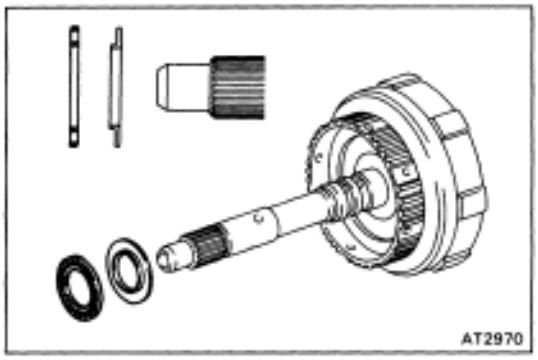

62. INSTALL FORWARD CLUTCH AND DIRECT CLUTCH

(a) Coat the race and bearing with petroleum jelly, and install them onto the forward clutch drum.
Bearing and race:

mm (in.)

	Outer diameter	Inner diameter
Bearing	42.0 (1.654)	28.9 (1.138)
Race	42.0 (1.654)	27.1 (1.067)

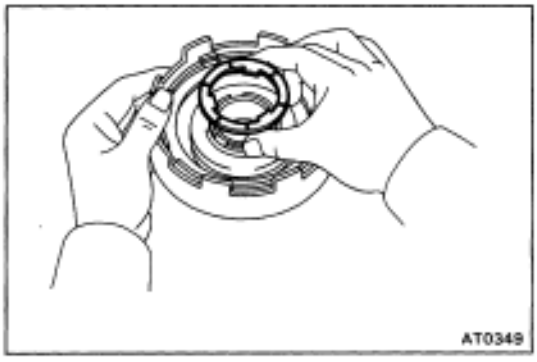

(b) Coat the clutch drum thrust washer with petroleum jelly, and install it onto the direct clutch drum with the oil groove facing upward.

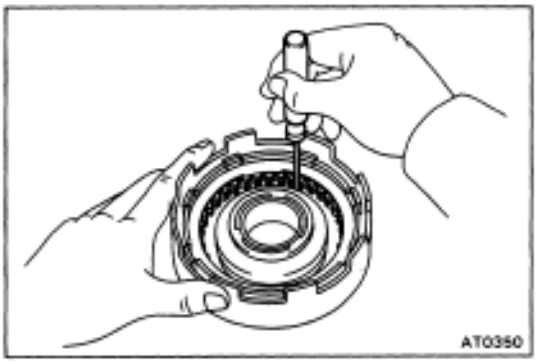

(c) Using a screwdriver, align the flukes of discs in the direct clutch.

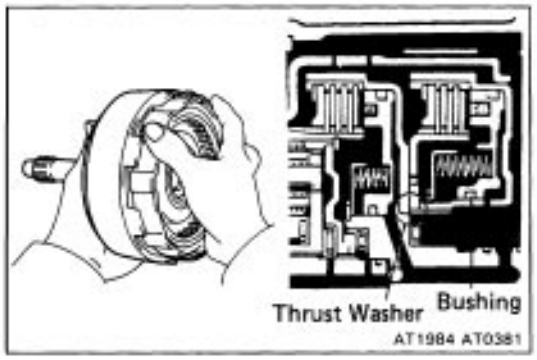

(d) Mesh the hub with the flukes of the direct clutch while turning the clutch drum or forward clutch.

HINT: If the flukes of the discs are meshed with the hub correctly, the end of the bushing with the direct clutch drum will be flush with the surface of the forward clutch.

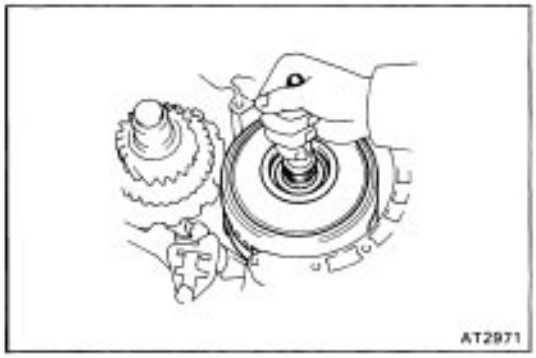

(e) Place the direct clutch and forward clutch into the case.

M While rotating the forward clutch to mesh the front planetary ring gear and discs, install them.

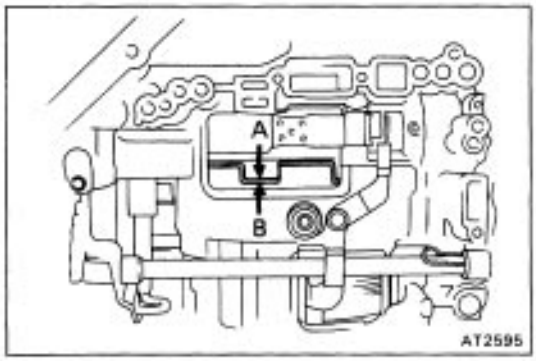

(g) Check the distance between A and B as shown in the illustration.

Distance: Approx. 3 mm (0.118 in.)

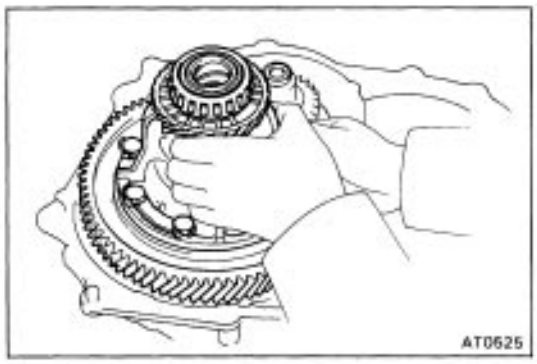

63. INSTALL DIFFERENTIAL

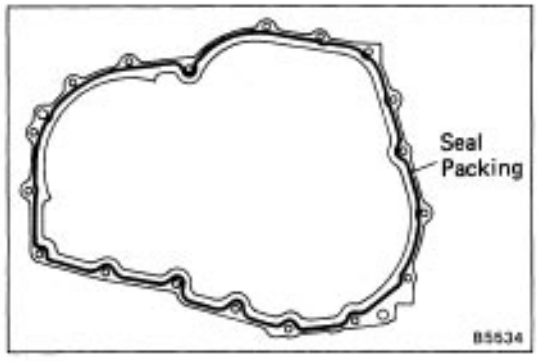

64. INSTALL TRANSAXLE HOUSING

(a) Remove any packing material and be careful not to get oil on the contacting surfaces of the transaxle housing or transmission case.

(b) Apply seal packing to the transaxle housing as shown.

Seal packing: Part No.08833–00090, THREE BOND 1131, LOCTITE 518 or equivalent.

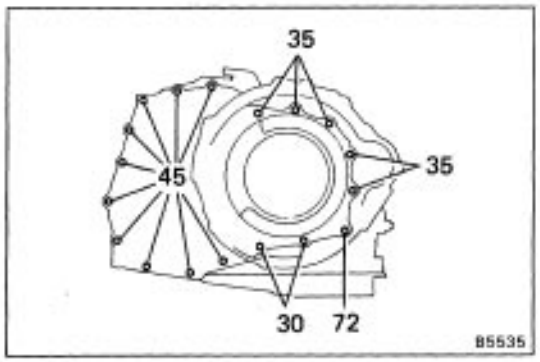

(c) Install and tighten the bolts.
Torque: 300 kg–cm (22 ft–lb, 29 N–m)
HINT: Each bolt length (mm) is indicated in the illustration.

65. CHECK PRELOAD OF DIFFERENTIAL SIDE BEARING
(See page AT–219)

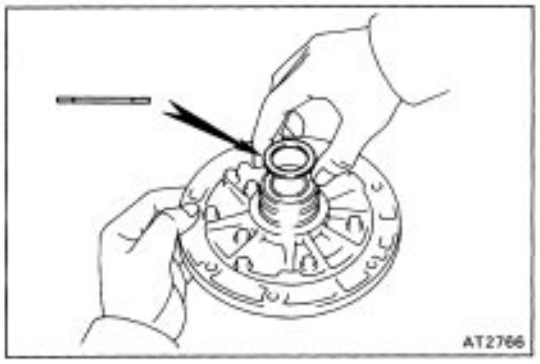

66. INSTALL OIL PUMP INTO CASE
(a) Coat the race with petroleum jelly and install it onto the stator shaft.
Race: Outer diameter 43.0 mm (1.693 in.)
Inner diameter 30.5 mm (1.201 in.)

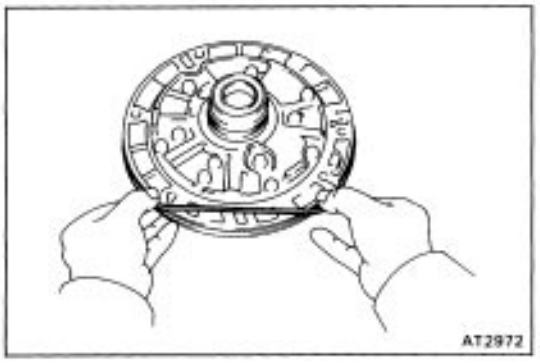

(b) Coat the O–ring with ATF, and install it to pump body.

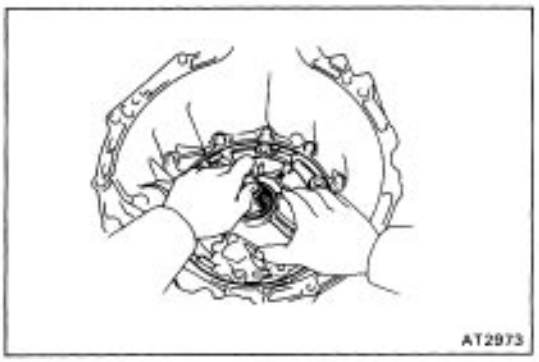

(c) Place the oil pump through the input shaft, and align the bolt holes of the pump body with the transmission case.
(d) Hold the input shaft, and lightly press the oil pump body to slide the oil seal rings on the stator shaft through the direct clutch drum.
NOTICE: Do not push on the oil pump strongly, or the oil seal ring will stick to the direct clutch drum.

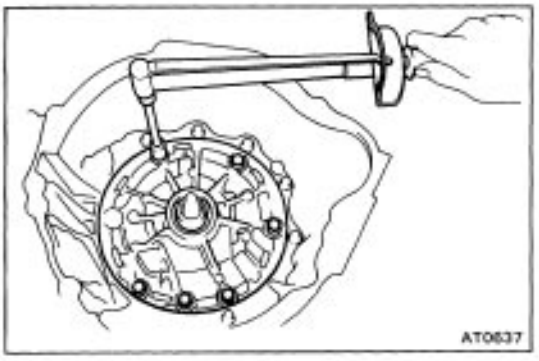

(e) Install and tighten the six bolts.
Torque: 225 kg–cm (16 ft–lb, 22 N–m)

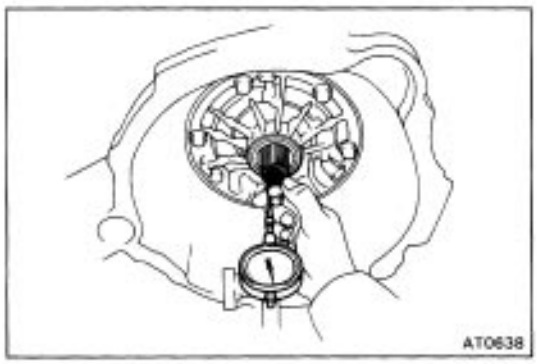

67. MEASURE THRUST PLAY OF INPUT SHAFT

Measure the thrust play in axial direction.

Thrust play: 0.3 – 0.9 mm (0.012 – 0.035 in.)

If the play is not as specified, select and replace the race for the end of the stator shaft.

HINT: There are two different thicknesses of races. If necessary, select one of them.

Race thickness: 0.8 mm (0.031 in.)

1.4 mm (0.055 in.)

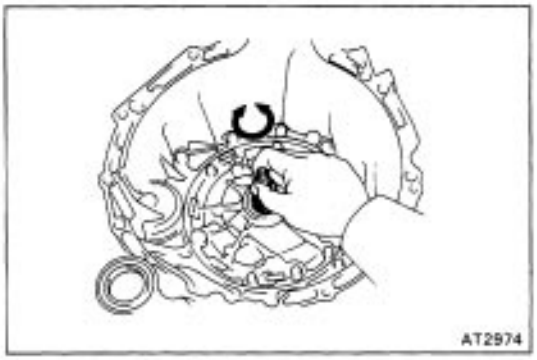

68. CHECK INPUT SHAFT ROTATION

Make sure that the input shaft rotates smoothly.

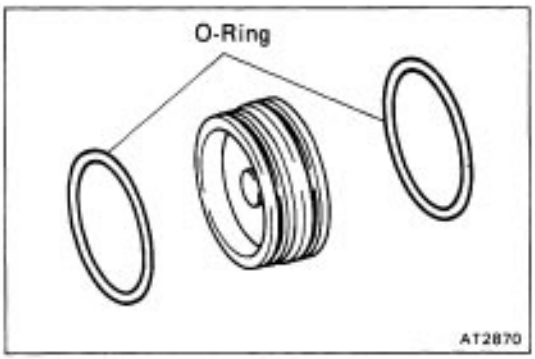

69. INSTALL SECOND COAST BRAKE PISTON

(a) Install the two new O–rings to the cover.

HINT: Coat the O–rings with ATF before installing.

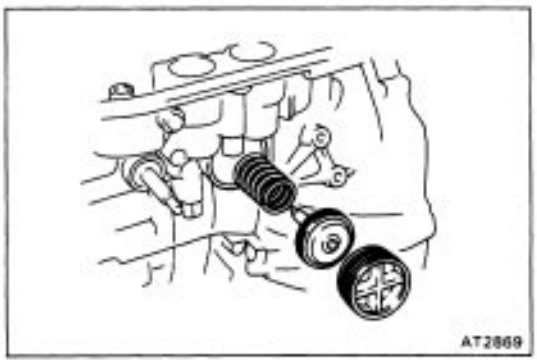

(b) Install the spring, piston and cover into the bore.

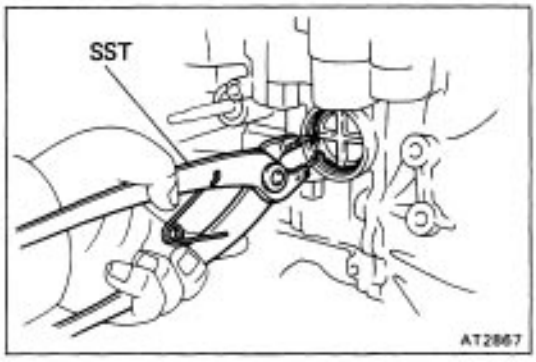

(c) Using SST, install the snap ring while pressing the cover.

SST 09350–32014 (09351–32050)

(d) Check that the front end of the piston rod contacts the center of the second brake band depression.

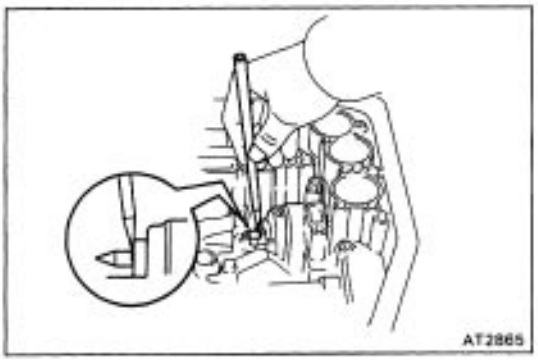

70. MEASURE PISTON STROKE OF SECOND COAST BRAKE

(a) Apply a small amount of paint to the piston rod at the point it meets the case as shown in the illustration.

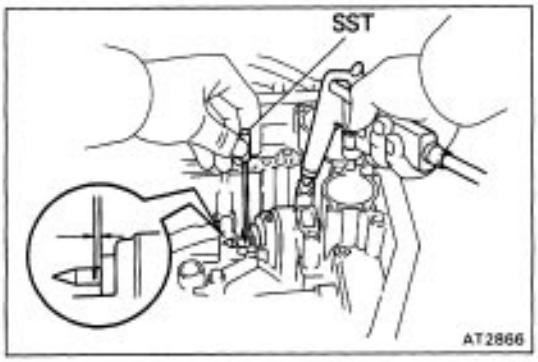

(b) Using SST, measure the piston stroke applying and releasing the compressed air (4–8 kg/cm2, 57–114 psi, 392–785 kPa) as shown.
SST 09240–00020
Piston stroke: 1.5 – 3.0 mm (0.059 – 0.118 in.)

If it is still more than standard value, replace the brake band with a new one.

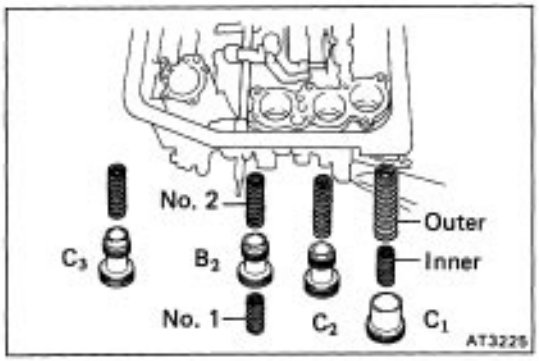

71. INSTALL ACCUMULATOR PISTONS AND SPRINGS

(a) Coat the new O–rings with ATF, and install them to the pistons.

(b) Install the pistons and springs.

Spring		Free length mm (in.)	Color
C_1	Outer	71.10 (2.7992)	White
	Inner	42.50 (1.6732)	None
C_2		63.50 (2.5000)	Orange
B_2	No. 1	35.18 (1.3850)	Yellow
	No. 2	56.68 (2.2315)	Yellow
C_3		64.72 (2.5480)	Red and Yellow

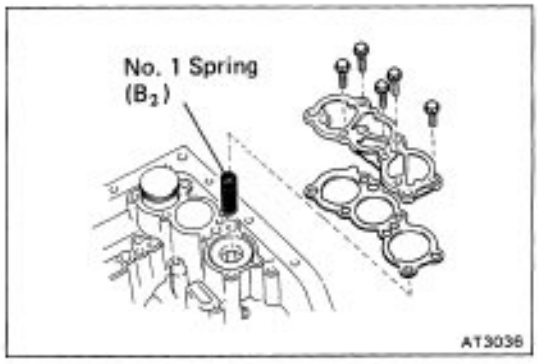

(c) Install a new gasket and accumulator cover.

(d) Tighten the five bolts shown in the illustration evenly and gradually.

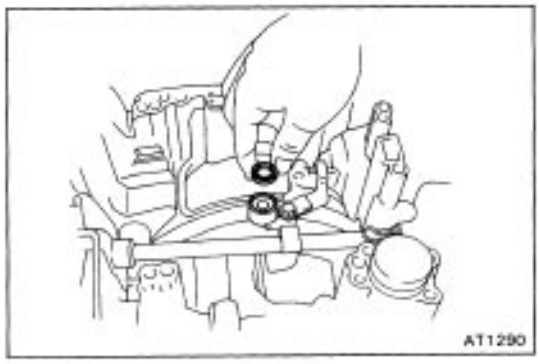

72. INSTALL SECOND BRAKE APPLY GASKET

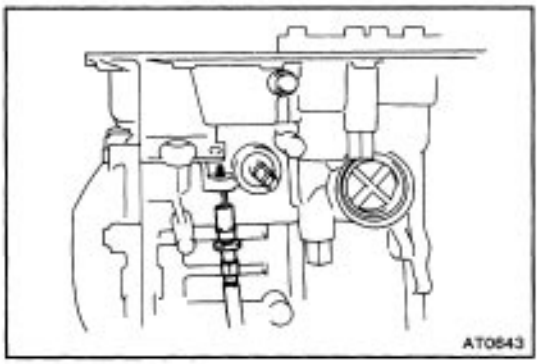

73. INSTALL THROTTLE CABLE IN CASE

Push the cable through the hole on the case, being careful not to damage the O–ring. Check for full seating.

NOTICE: In subsequent work, to avoid breaking the cable fitting do not roll the case over the cable.

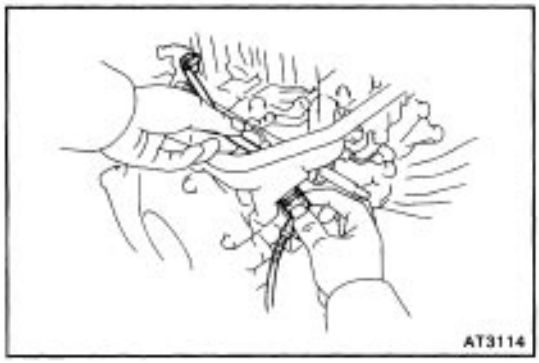

74. INSTALL SOLENOID WIRE



75. INSTALL VALVE BODY

(a) Place the valve body on the transmission.

(b) While holding the cam down with your hand, slip the cable end into the slot.

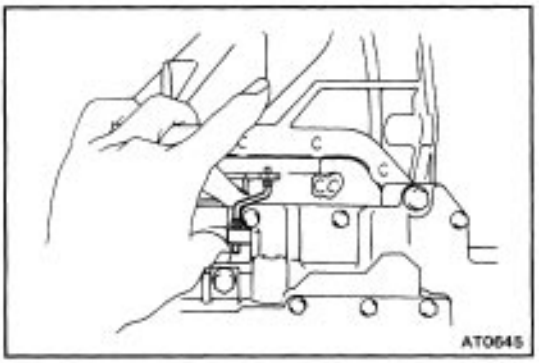

(c) Connect the connecting rod to the manual valve lever.

(d) Lower the valve body in place.

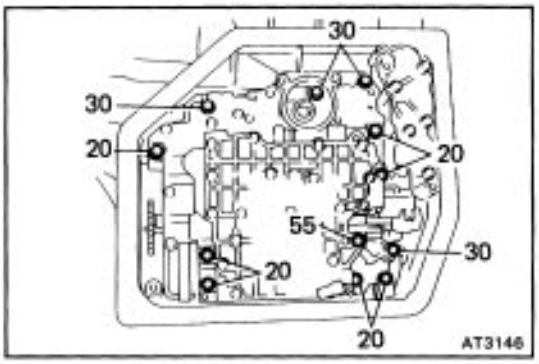

(e) Install the twelve bolts and wire retainer shown in the illustration, and hand tighten all the bolts first. Then tighten them with a torque wrench.

HINT: Each bolt length (mm) is indicated in the illustration.

Torque: 100 kg–cm (7 ft–lb, 10 N–m)

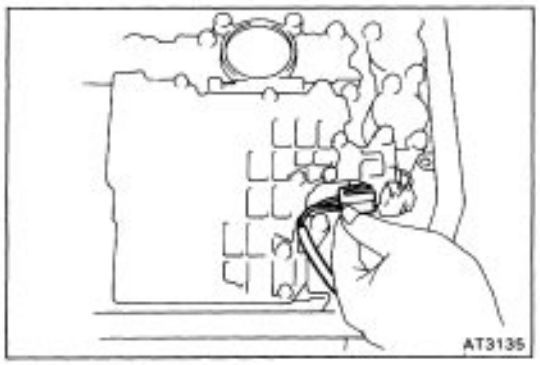

76. CONNECT SOLENOID CONNECTOR

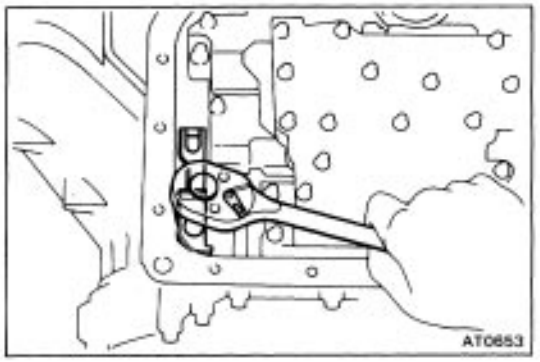

77. INSTALL MANUAL DETENT SPRING

(a) Install the detent spring and cover in place, and install the bolt (length: 16 mm).

(b) Hand tighten the bolt first, then tighten the bolt with a torque wrench.

Torque: 100 kg–cm (7 ft–lb, 10 N–m)

(c) Check that the manual valve lever is in contact with the center of the roller at the tip of the detent spring.

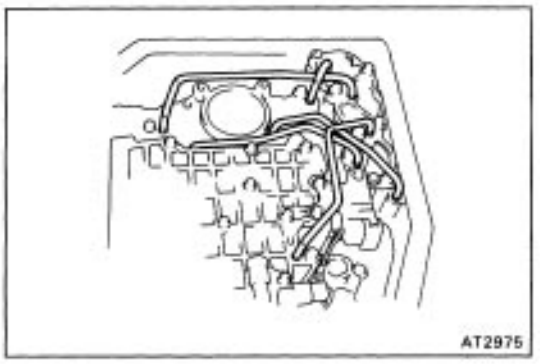

78. INSTALL OIL TUBES

(a) Tap the tubes with a plastic hammer to install them into the positions indicated in the illustration.

NOTICE: Be careful not to bend or damage the tubes.

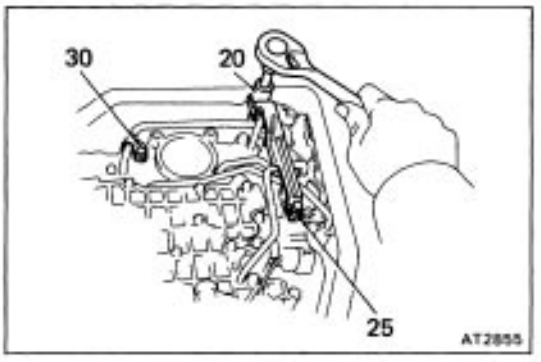

(b) Install the oil tube clamp and bracket.

HINT: Each bolt length (mm) is indicated in the illustration. Hand tighten all bolts first, then tighten them with a torque wrench.

Torque: 100 kg–cm (7 ft–lb, 10 N–m)

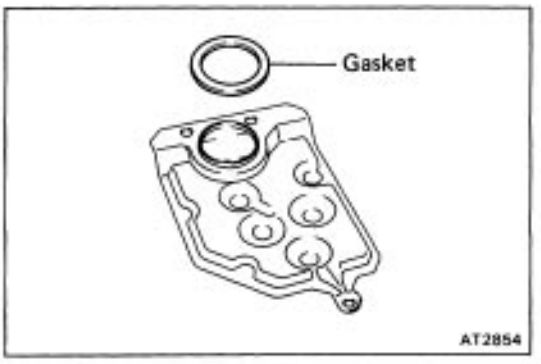

79. INSTALL OIL STRAINER

(a) Install the new gasket to the oil strainer.

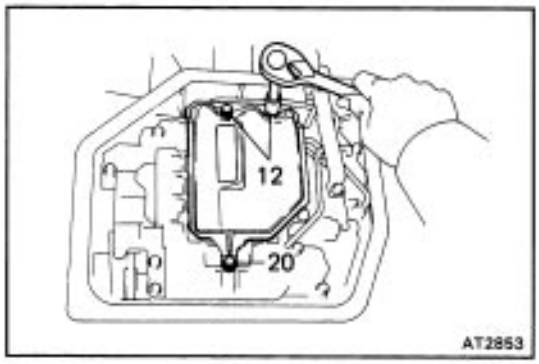

(b) Install the oil strainer with the three bolts.
HINT: Each bolt length (mm) is indicated in the illustration.

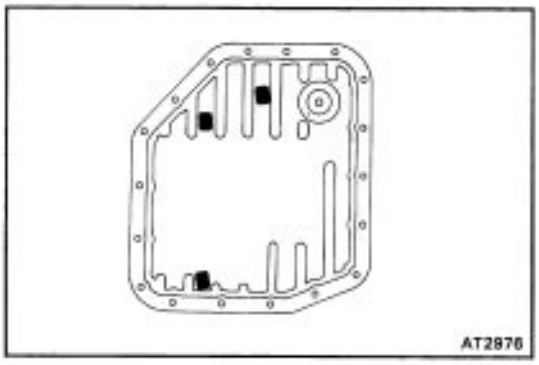

80. INSTALL THREE MAGNETS IN OIL PAN

NOTICE: Make sure that the magnets do not interfere with the oil tubes.

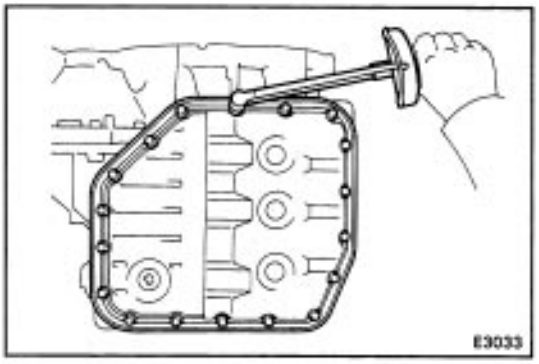

81. INSTALL OIL PAN

(a) Install a new gasket to the oil pan and install them to the transmission.
(b) Tighten the eighteen bolts.
Torque: 50 kg–cm (43 in.–lb, 4.9 N–m)

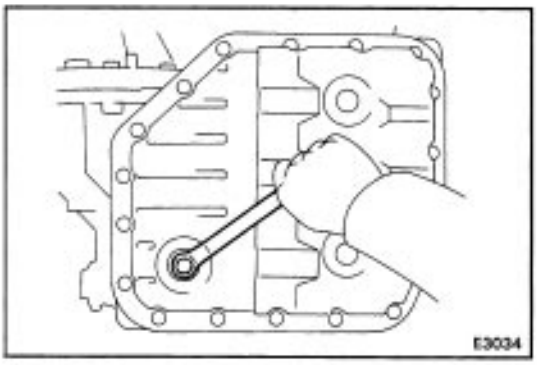

(c) Install a new gasket to the drain plug and install it to the oil pan.
Torque: 175 kg–cm (13 ft–lb, 17 N–m)



82. INSTALL GOVERNOR BODY

(a) Install the oil strainer.

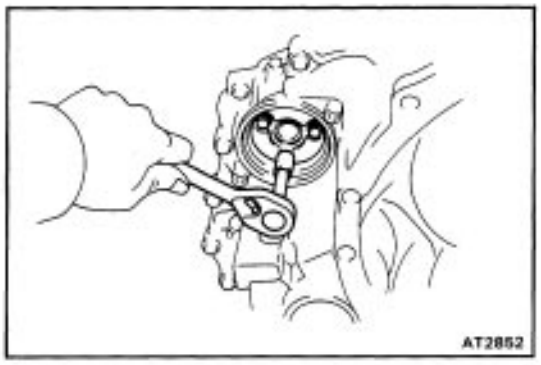

(b) Install a new gasket to governor body adaptor.
(c) Install the governor body adaptor with three bolts.



(d) Install the governor body and thrust washer.
(e) Install a new O–ring to the cover.

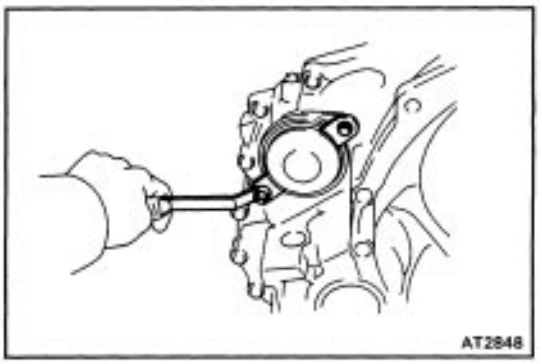

(f) Install the cover to the transmission and then install the two cover brackets with the two bolts.
Torque: 130 kg–cm (9 ft–lb, 13 N–m)

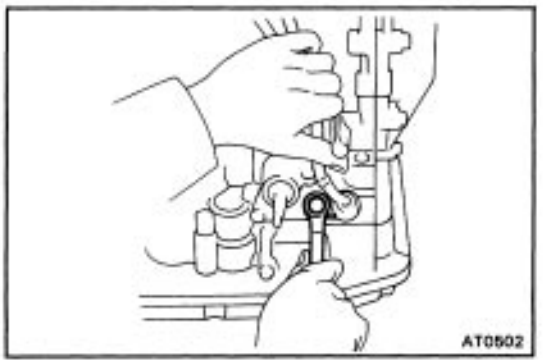

83. INSTALL SOLENOID WIRE RETAINING PLATE
Install the retaining plate with the bolt.

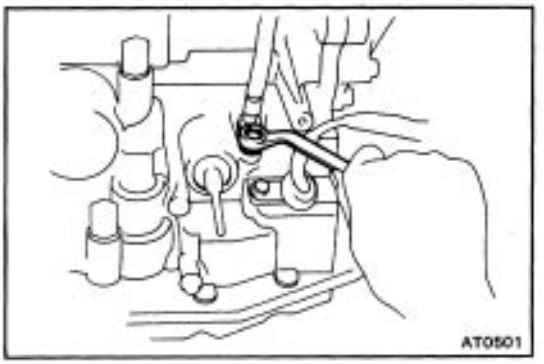

84. INSTALL THROTTLE CABLE RETAINING PLATE
Install the retaining plate with the bolt.

85. INSTALL NEUTRAL START SWITCH

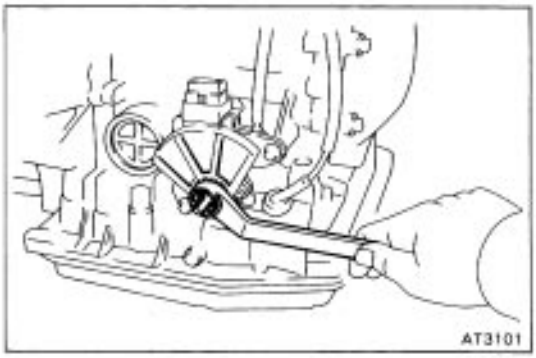

(a) Install the neutral start switch to the manual valve shaft.
(b) Install the packing, nut stopper and nut.
(c) Tighten the nut.
Torque: 70 kg–cm (61 in.–lb, 6.9 N–m)

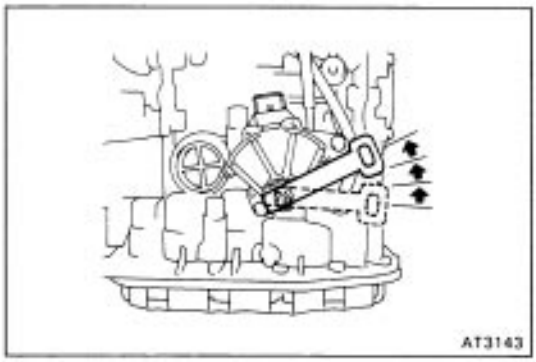

(d) Temporarily install the manual shift lever.
(e) Turn the lever clockwise until it stops, then turn it counterclockwise three notches.
(f) Remove the manual shift lever.

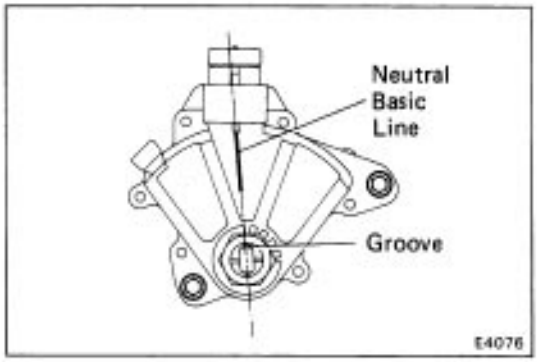

(g) Align the groove and neutral basic line as shown.
(h) Install and tighten the two bolts.
Torque: 55 kg–cm (48 in.–lb, 5.4 N–m)

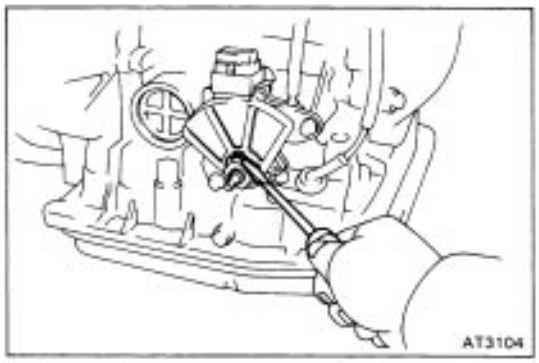

(i) Using a screwdriver, stake the nut with the nut stopper.

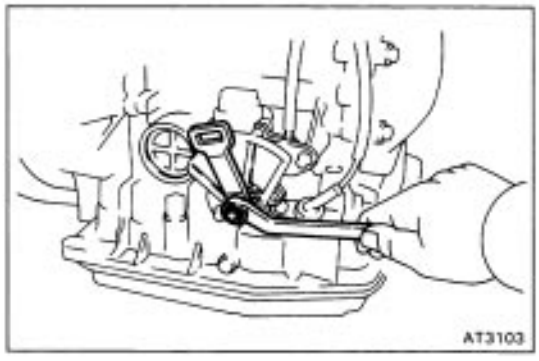

Install the manual shift lever with the washer, and tighten the nut.

INSTALLATION OF COMPONENT PARTS (A241H)

Disassembly, inspection and assembly of each component group have been indicated in the preceding chapter. Before assembly, make sure again that all component groups are assembled correctly. If something wrong is found in a certain component group during assembly, inspect and repair this group immediately.
Recommended:

ATF Type T (08886–00405) or equivalent
Transaxle oil E50 (08885–80206) or equivalent

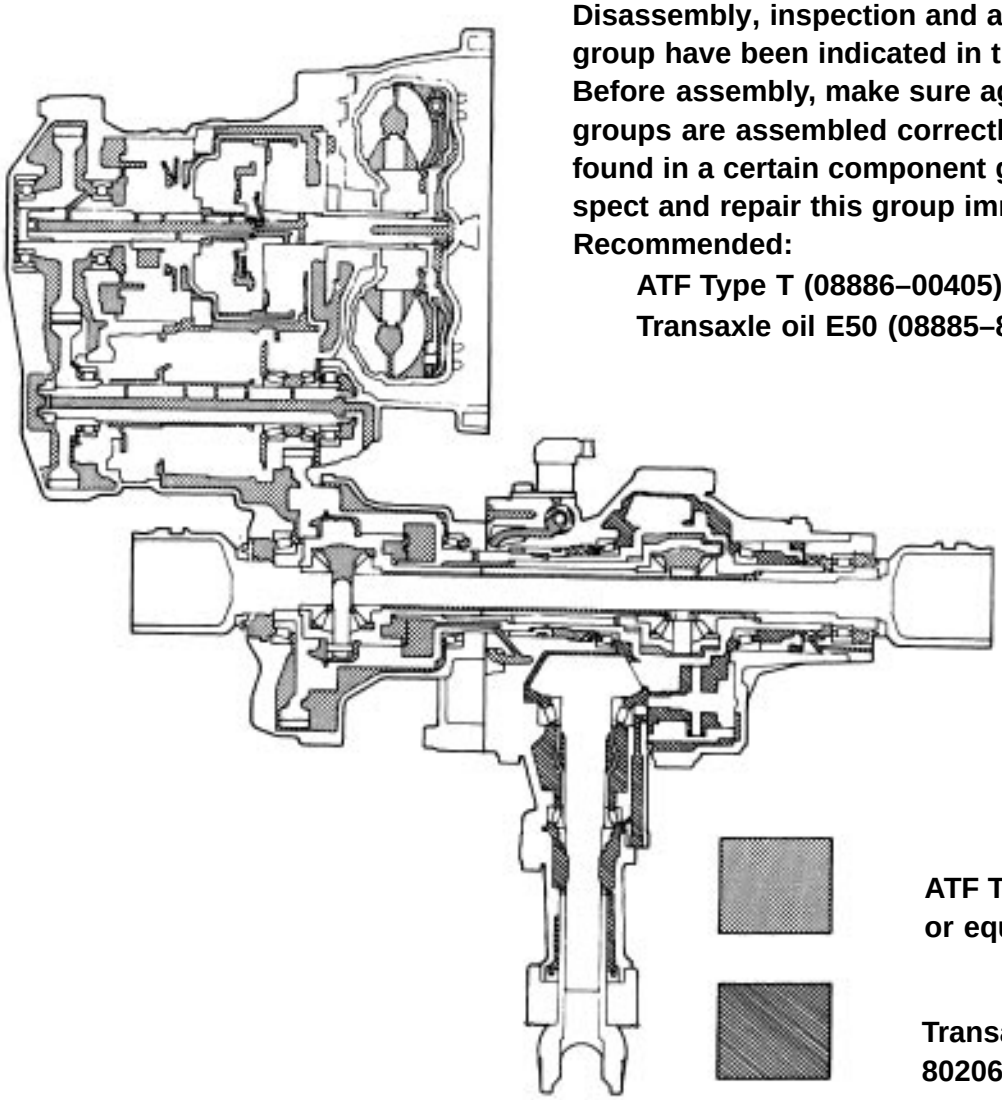

ATF Type T (08886–00405) or equivalent

Transaxle oil E50 (08885–80206) or equivalent

GENERAL ASSEMBLY NOTES:

1. The automatic transmission is composed of highly precision finished parts, necessitating careful inspection before assembly, because even a small nick could cause fluid leakage or affect performance.
2. Before assembling new clutch discs, soak them in automatic transmission fluid for at least two hours.
3. Apply automatic transmission fluid on the sliding or rotating surfaces of parts before assembly.
4. Use petroleum jelly to keep small parts in their place.
5. Do not use adhesive cements on gaskets and similar parts.
6. When assembling the transmission, be sure to use new gaskets and O–rings.
7. Dry all parts by blowing with compressed air. Never use shop rags.

8. Be sure to install the thrust bearings and races in the correct direction and position.

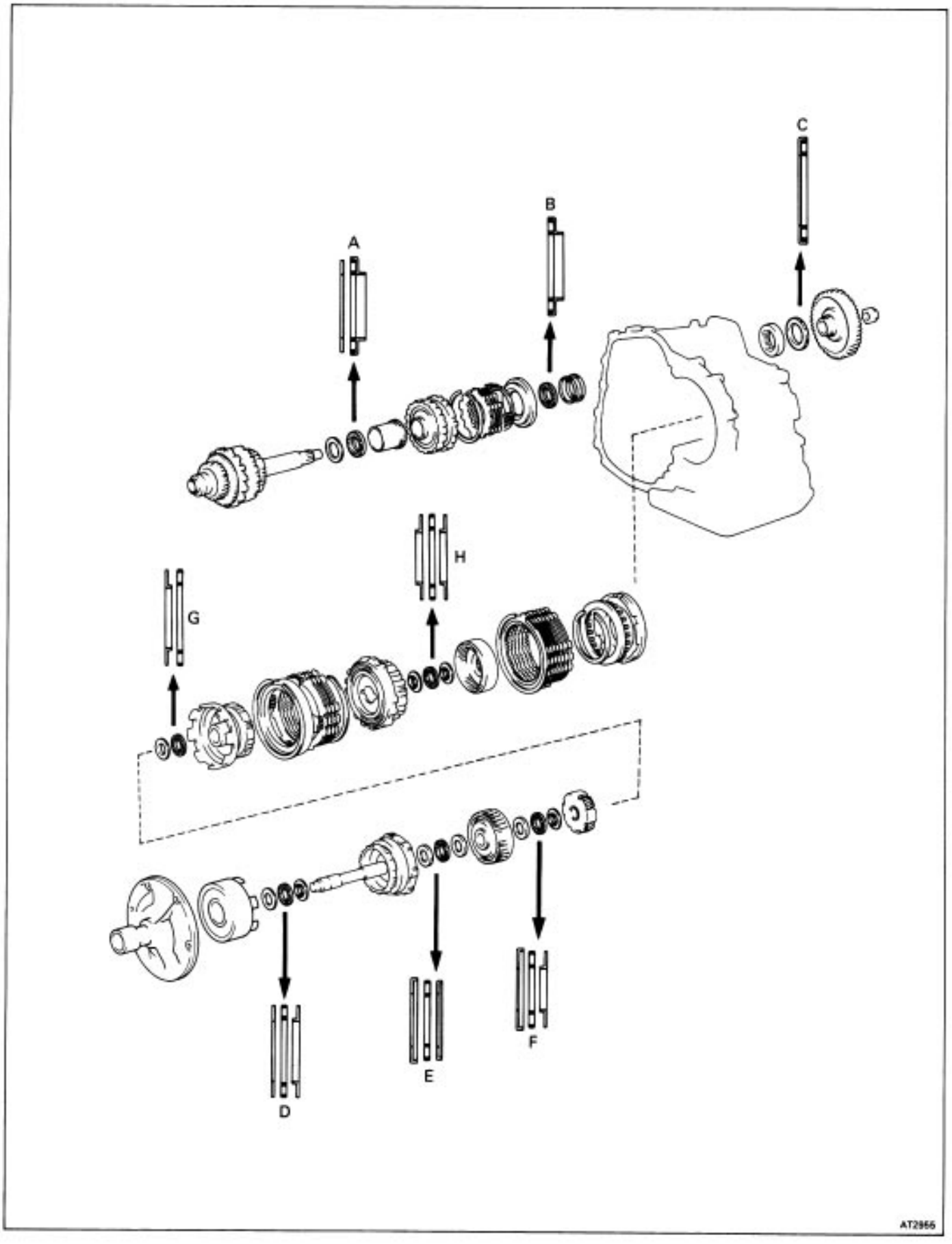

mm (in.)

		A	B	C	D	E	F	G	H
Front Bearing Race	Outer Diameter	41.8 (1.646)	—	—	43.0 (1.693)	37.9 (1.492)	←	45.0 (1.772)	37.3 (1.469)
	Inner Diameter	30.0 (1.181)	—	—	30.5 (1.201)	22.0 (0.866)	←	28.0 (1.102)	24.1 (0.949)
Thrust Bearing	Outer Diameter	43.7 (1.720)	←	57.7 (2.272)	42.0 (1.654)	36.1 (1.421)	←	45.0 (1.772)	37.6 (1.480)
	Inner Diameter	31.0 (1.220)	←	41.0 (1.614)	28.9 (1.138)	22.2 (0.874)	←	30.0 (1.181)	24.0 (0.945)
Rear Bearing Race	Outer Diameter	—	—	—	42.0 (1.654)	35.7 (1.406)	35.0 (1.378)	—	37.6 (1.480)
	Inner Diameter	—	—	—	27.1 (1.067)	23.0 (0.906)	19.0 (0.748)	—	22.2 (0.874)

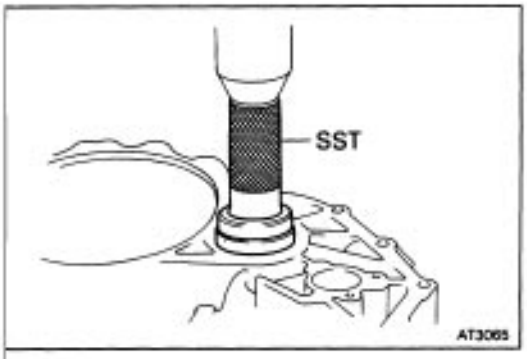

1. INSTALL BEARING TO TRANSAXLE HOUSING

(a) Using SST and a press, press the bearing into the transaxle housing.
SST 09350–32014 (09351–32140)

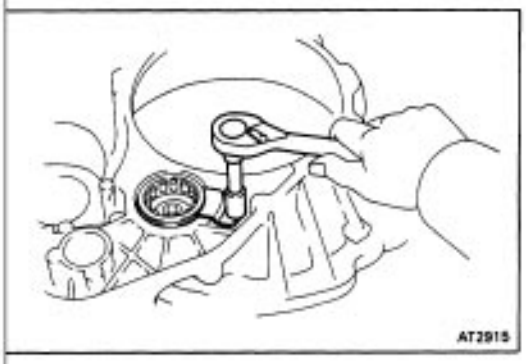

(b) Install the bearing stopper with a bolt.

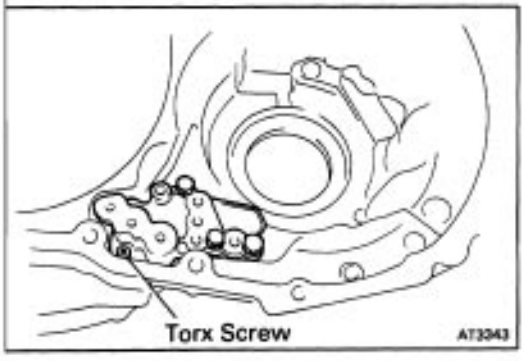

2. INSTALL GASKET AND OIL TUBE APPLY COVER

Install the new gasket and oil tube apply cover, and tighten the three bolts and a torx screw.

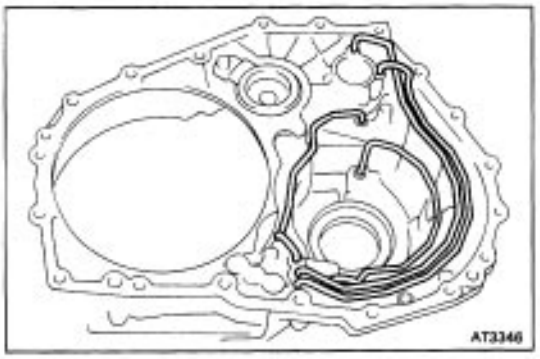

3. INSTALL OIL TUBES

(a) Using a plastic hammer, install the four oil tubes.

NOTICE: Be careful not to bend or damage the tubes.

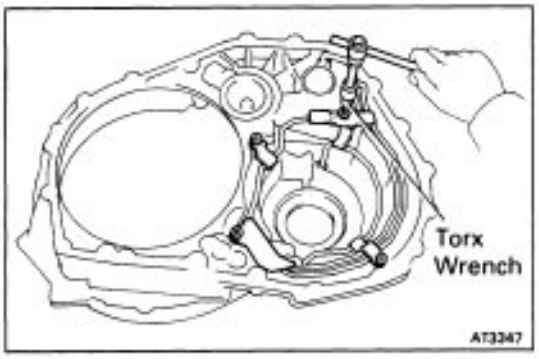

(b) Using a torx wrench, install the four tube clamps.

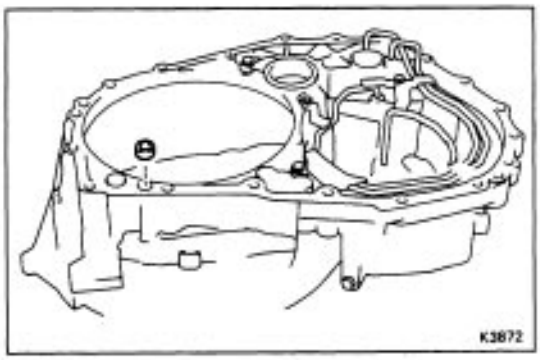

4. INSTALL APPLY GASKET

Install a new apply gasket to the transaxle housing.

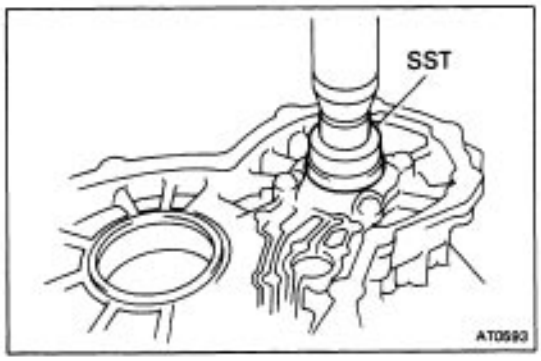

5. INSTALL BEARING TO TRANSMISSION CASE

Using SST and a press, press the bearing into the transmission case.

SST 09350–32014 (09351–32090)

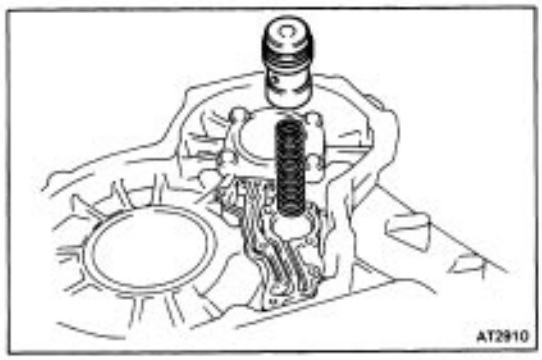

6. INSTALL B4 ACCUMULATOR PISTON AND SPRING

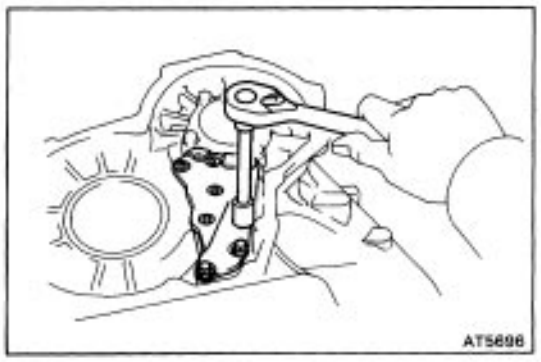

7. INSTALL OIL GALLERY COVER AND GASKET

(a) Clean the threads of the screws and case with white gasoline.

(b) Install the new gasket and oil gallery cover in place.

(c) Install and tighten the three bolts.

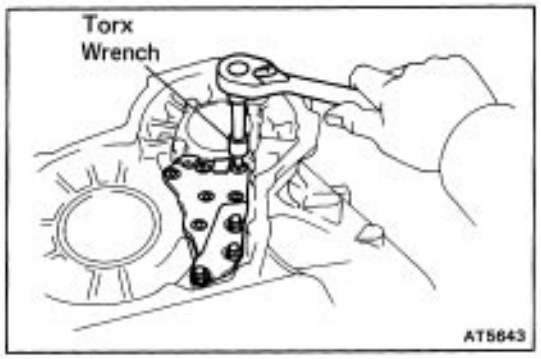

(d) Apply seal packing or equivalent to the six torx screws.
Seal packing: Part No.08833–00070, THREE BOND 1324 or equivalent

(e) Install and tighten ,the six torx screws.

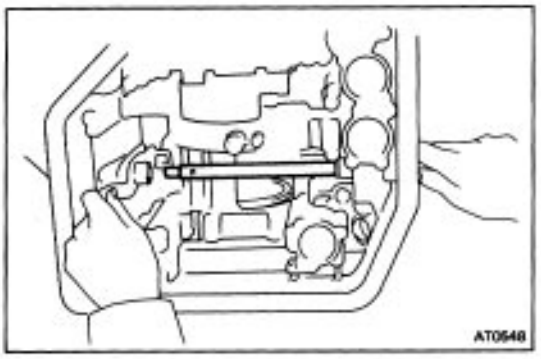

8. INSTALL MANUAL VALVE SHAFT AND LEVER

(a) Install the parking lock rod to the manual valve lever.

(b) Slide in the shaft and install the washer, new spacer and manual lever.

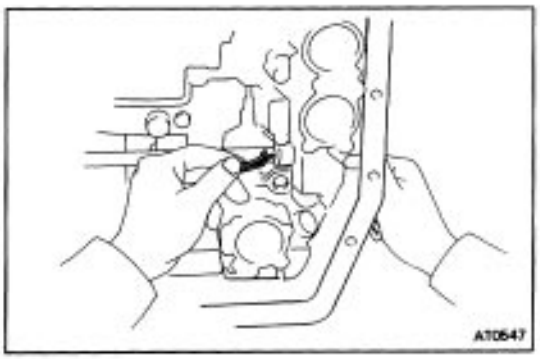

(c) Install the retaining spring.
HINT: Make sure there is a washer between the retaining spring and case.

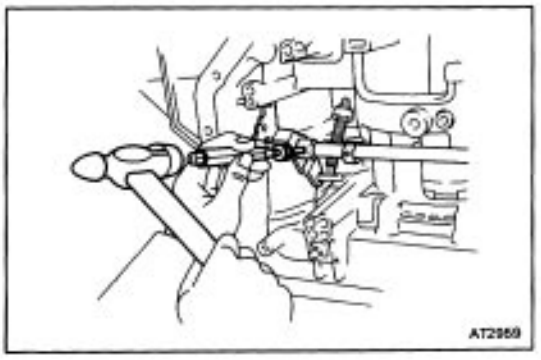

9. INSTALL PIN

(a) Using a punch and hammer, drive in the pin.

(b) Position the spacer and stake it.

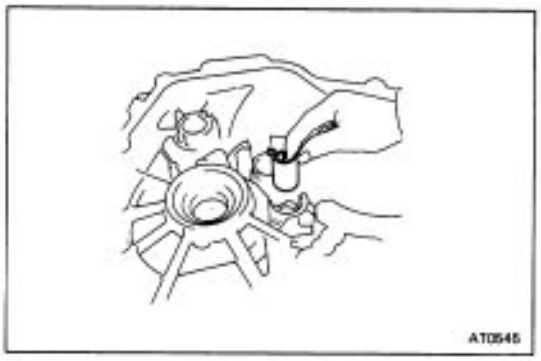

10. INSTALL CAM GUIDE BRACKET

Install the cam guide bracket and then insert the parking lock rod into the guide bracket.

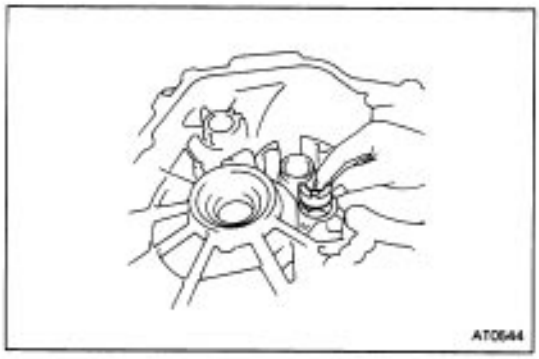

11. INSTALL PARKING LOCK SLEEVE

Install the parking lock sleeve protruding portion upward.

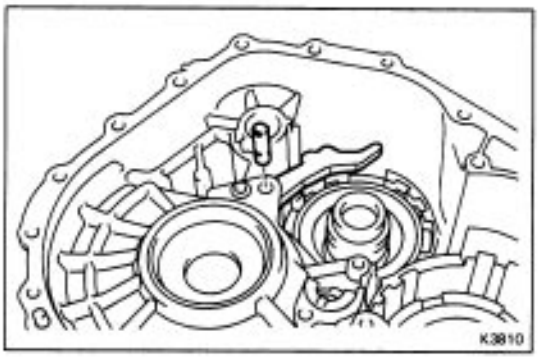

12. INSTALL PARKING LOCK PAWL, PAWL SHAFT AND SHAFT CLAMP

(a) Install the parking lock pawl and pawl shaft.

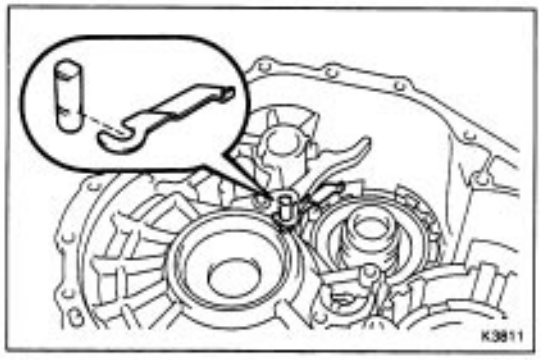

(b) Align the pawl shaft groove and shaft clamp cu1 position.

(c) Install the shaft clamp.

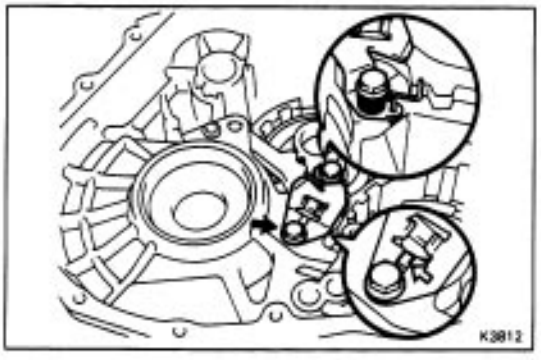

13. INSTALL STOPPER PLATE AND GUIDE SLEEVE

(a) Place the stopper– plate on the protruding portion of lock sleeve.

(b) Install the guide sleeve and spring.

Torque: 75 kg–cm (65 in.–lb, 7.4 N–m)

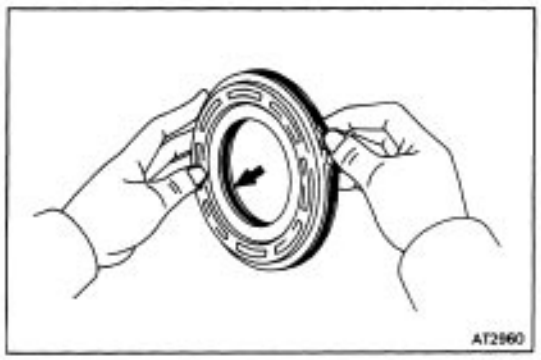

14. INSTALL UNDERDRIVE BRAKE PISTON

(a) Coat the two new O–rings with ATF.

(b) Install the O–rings to the piston.

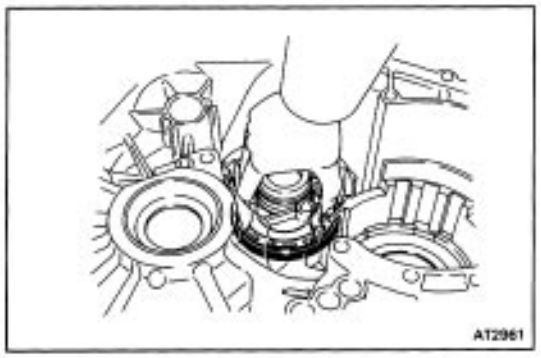

(c) Place the piston into the case with the cup side up, being careful not to damage the O–rings.

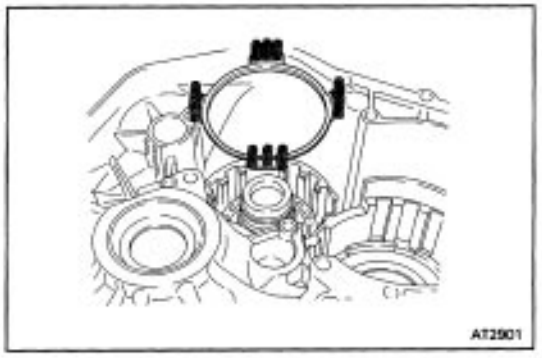

15. INSTALL RETURN SPRING

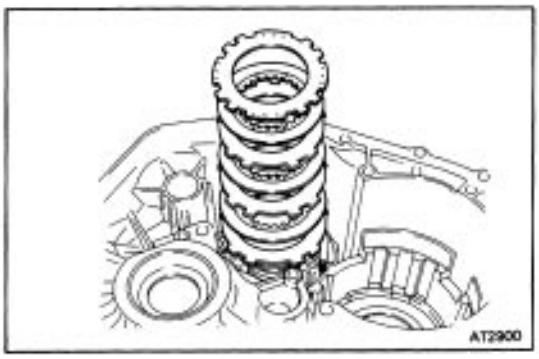

16. INSTALL PLATES, DISCS AND FLANGE

(a) Install in order: D=Disc P=Plate F=Flange

P–D–P–D–P–D–F

HINT: Install the flange with the flat end facing upward.

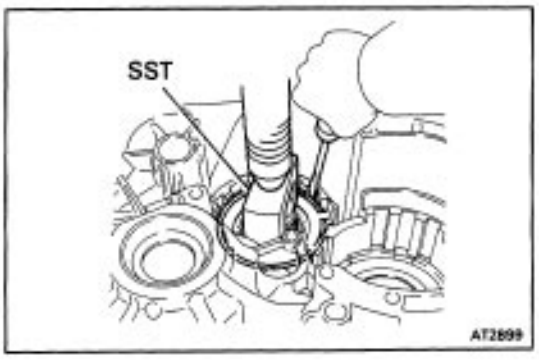

(b) Place SST on the flange, and compress the flange with a press. .

SST 09350–32014 (09351–32070)

(c) Install the snap ring.

HINT: Be sure the end gap of the snap ring is not aligned with one of the cutouts.

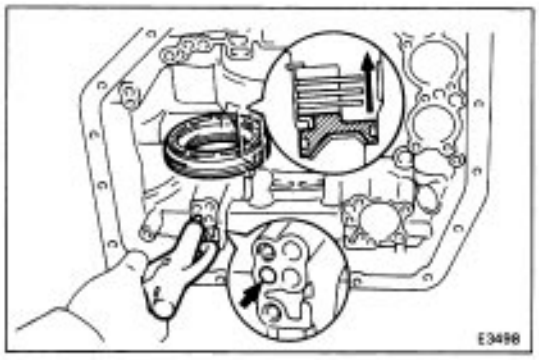

17. CONFIRM THAT UNDERDRIVE BRAKE PISTON MOVES

Using compressed air, confirm that the underdrive brake piston moves smoothly.

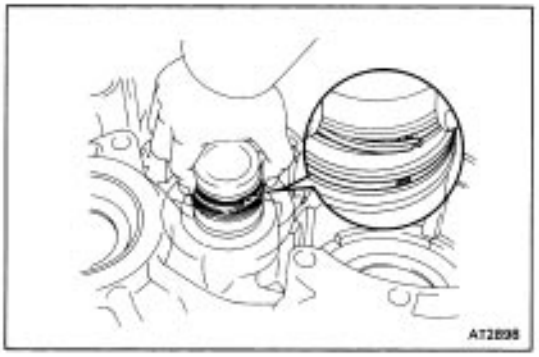

18. INSTALL OIL SEAL RINGS TO TRANSMISSION CASE

Install the two oil seals to the transmission case.

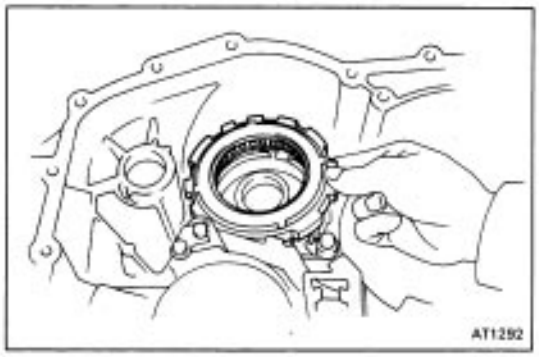

19. INSTALL UNDERDRIVE ONE–WAY CLUTCH

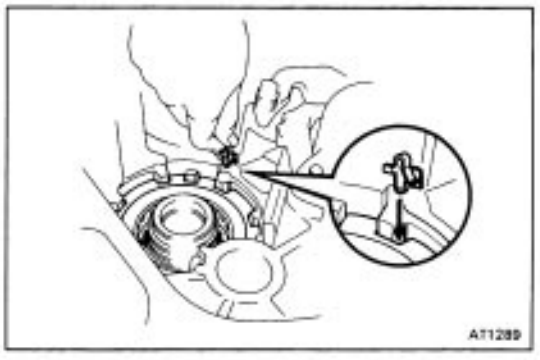

20. INSTALL ANTI–RATTLE CLIP

In the place shown i n the figure (the space between the one–way clutch outer race and case), push the anti–rattle clip in until you hear the ”click”.

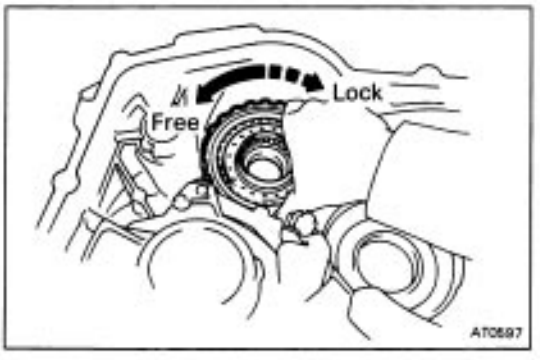

21. INSTALL UNDERDRIVE CLUTCH ASSEMBLY

(a) Align the flukes of discs in the underdrive brake.
(b) Install the clutch assembly.
(c) Turn the clutch assembly. The clutch assembly should turn freely counterclockwise and should lock clockwise.

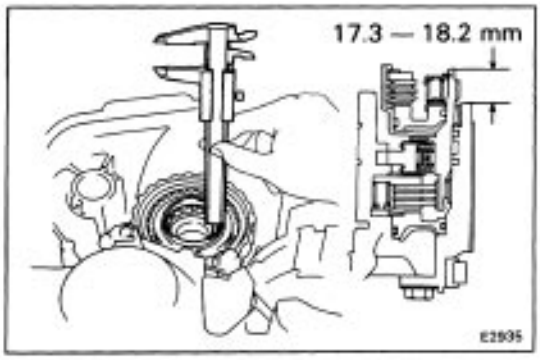

22. CHECK HEIGHT OF CLUTCH ASSEMBLY

Using vernier calipers, check the height from the sleeve to the inner race.

Height: 17.3 – 18.2 mm (0.6811 – 0.7165 in.)

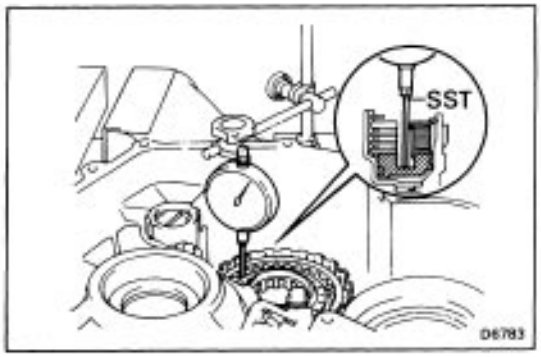

23. CHECK PISTON STROKE OF UNDERDRIVE CLUTCH

(a) Set a dial indicator (long type pick or SST) as shown.
SST 09350–32014 (09351–32190)

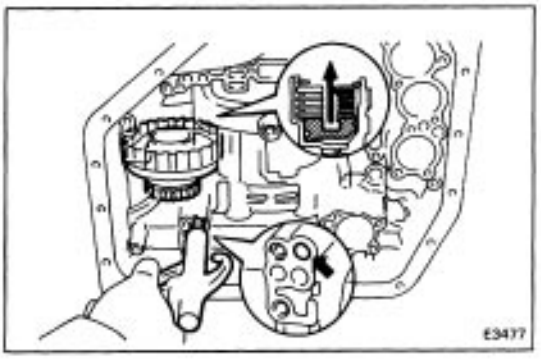

(b) Applying and releasing the compressed air (4 8 kg/cm2, 57 114 psi, 392 785 kPa), measure the underdrive clutch piston stroke.

Piston stroke: 1.50 – 1.86 mm (0.0591 – 0.0732 in.)

If the piston stroke is less than limit, parts may have been misassembled. Check them.

If the piston stroke is nonstandard, select another flange.

HINT: There are two different flange thickness.

Flange thickness: 2.04 mm (0.0803 in.)
2.40 mm (0.0945 in.)

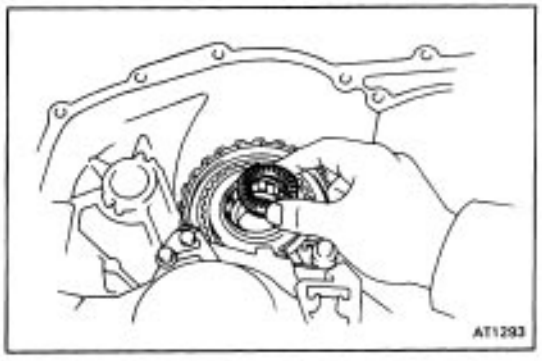

24. INSTALL BEARING WITH RACE

Install the thrust bearing with race, with the bearing facing upward.

Bearing: Outer diameter 43.7 mm (1.720 in.)
Inner diameter 31.0 mm (1.220 in.)

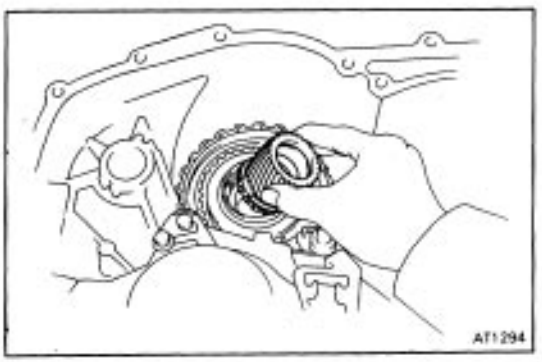

25. INSTALL SUN GEAR TO CASE

Install the sun gear of the counter shaft to the case.

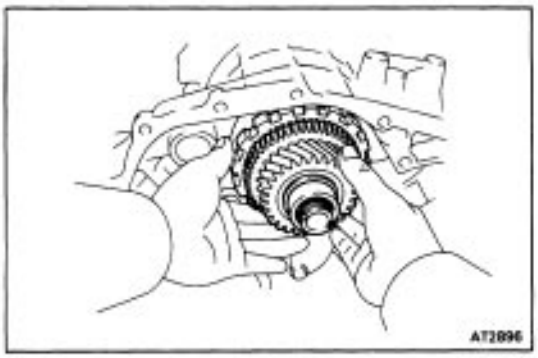

26. INSTALL COUNTER SHAFT ASSEMBLY

(a) Align the flukes of the discs in the underdrive clutch.

(b) Install the counter shaft assembly.

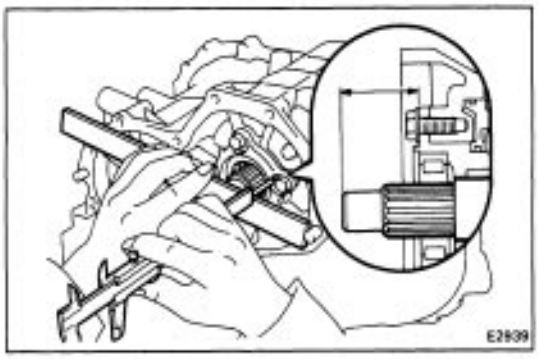

27. CHECK HEIGHT OF COUNTER SHAFT

Using vernier calipers, measure the distance between the tip of the counter shaft and bolt seat of the clutch support.

Height: 33.3 – 35.5 mm (1.311 – 1.398 in.)

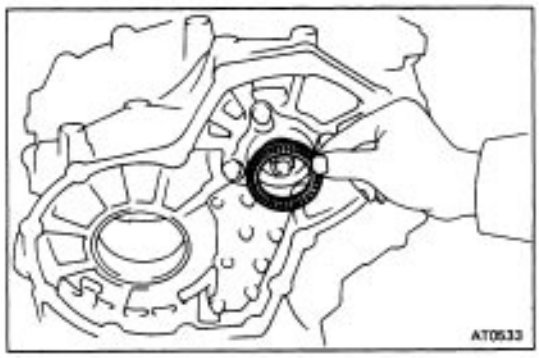

28. INSTALL THRUST NEEDLE BEARING

Bearing: Outer diameter 57.7 mm (2.272 in.)
Inner diameter 41.0 mm (1.614 in.)

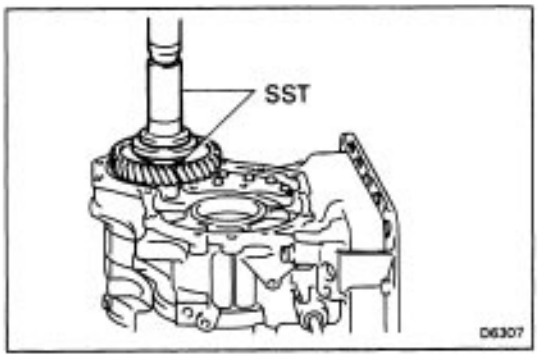

29. INSTALL COUNTER DRIVEN GEAR

Using SST and press, press in the driven gear.

SST 09350–32014
(09351–32100,09351–32140)

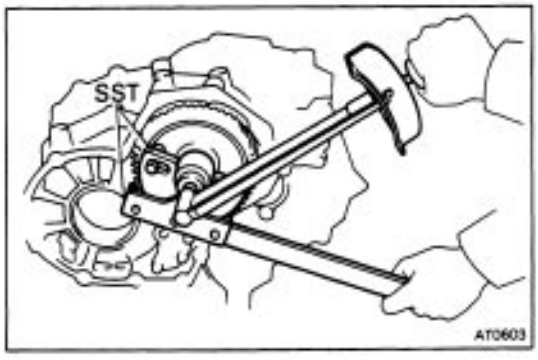

30. TIGHTEN NEW LOCK NUT

(a) Using SST to hold the driven gear, tighten a new lock nut.

SST 09330–00021, 09350–32014 (09351–32032)

Torque: 1,600 kg–cm (116 ft–lb, 157 N–m)

(b) Remove SST.

31. CHECK END PLAY OF COUNTER SHAFT

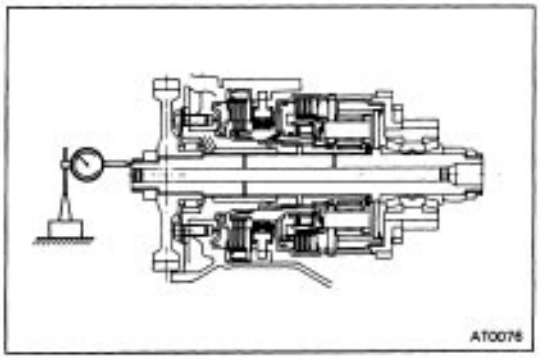

Using a dial indicator, measure the end play of the counter shaft.

End play: 0.23 – 0.89 mm (0.0091 – 0.0350 in.)

32. STAKE LOCK NUT

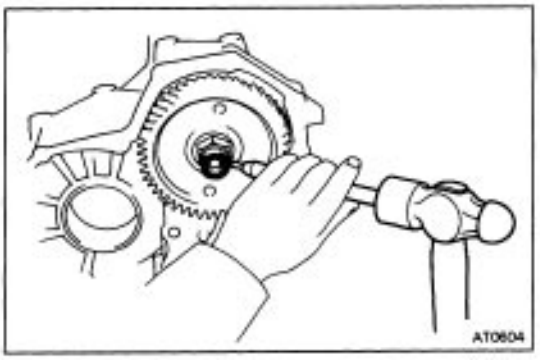

Using a punch and hammer, stake the lock nut.

33. INSTALL FIRST AND REVERSE BRAKE PISTON

(a) Coat the two new O–rings with ATF.

(b) Install the O–rings to the piston.

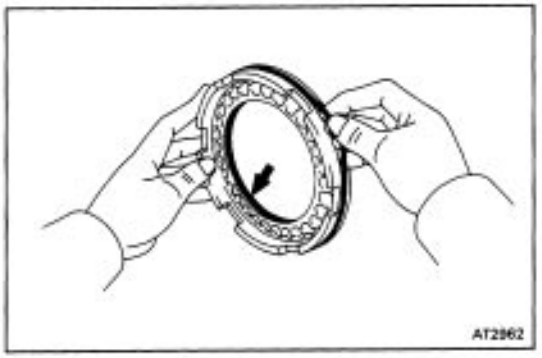

(c) Place the piston into the bore of the case, facing the spring seats upward.

(d) Using SST, press into the piston.

SST 09350–32014 (09351–32040)

HINT: Be careful not to damage the O–rings.

(e) Remove SST.

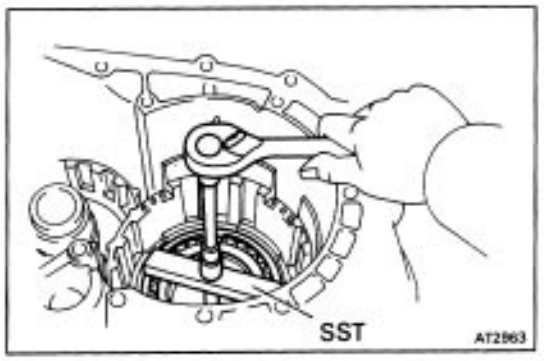

34. INSTALL PISTON RETURN SPRING AND SNAP RING

(a) Install the piston return spring assembly and snap ring in place.

(b) Set SST, and tighten the bolt gradually to compress the springs.

SST 09350–32014 (09351–32040)

NOTICE: Avoid bending the spring retainer by overtightening the bolt.

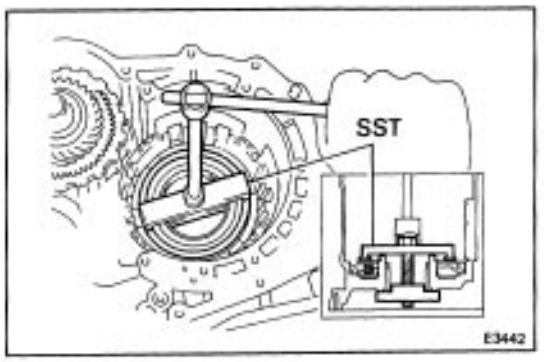

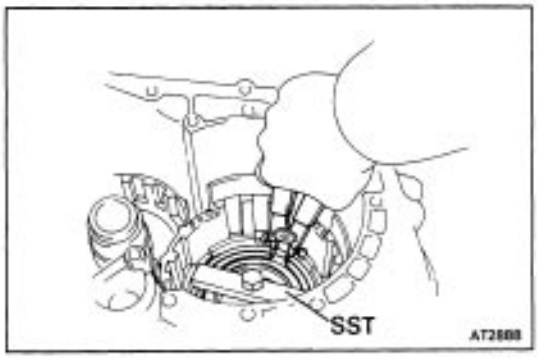

(c) Using snap ring pliers, install the snap ring.
HINT: Visually check to make sure it is fully seated and centered by the three lugs on the spring retainer.
Be sure the end gap of snap ring is not aligned with the spring retainer claw.
(d) Remove SST.
SST 09350–32014 (09351–32040)

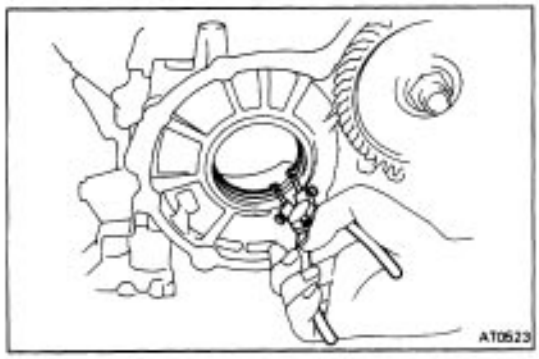

35. INSTALL SNAP RING TO TRANSMISSION CASE

Using snap ring pliers, install the snap ring to the transmission case.

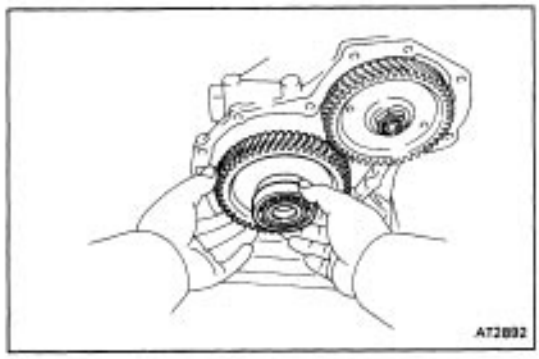

36. INSTALL INTERMEDIATE SHAFT

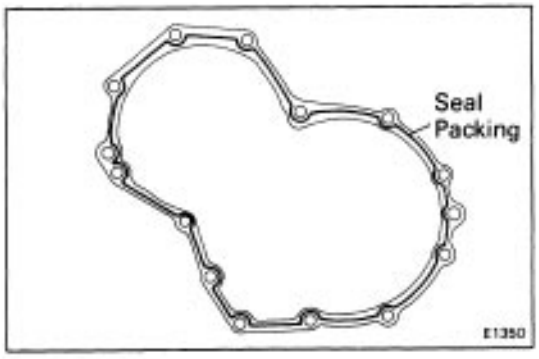

37. INSTALL TRANSAXLE REAR COVER

(a) Remove any packing material and be careful not to get oil on the contacting surfaces of the transaxle rear cover or transmission case.
(b) Apply seal packing to the rear cover as shown.
Seal packing: Part No.08833–00090, THREE BOND 1131, LOCTITE 518 or equivalent

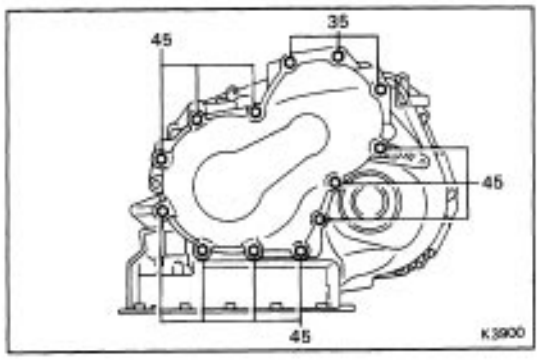

(c) Install and tighten the thirteen bolts.
Torque: 300 kg–cm (22 ft–lb, 29 N–m)
HINT: Each bolt length (mm) is indicated in the figure.

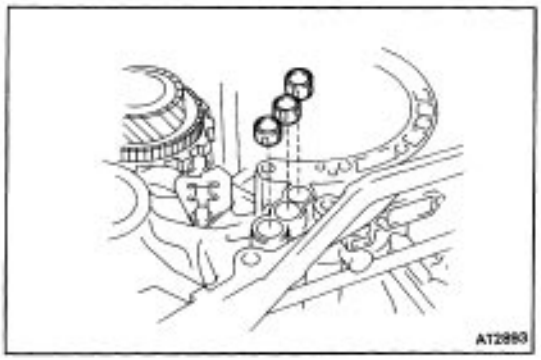

38. INSTALL NEW APPLY GASKETS

Install the three new apply gaskets.

HINT: The apply gasket may be inserted with either end up or down.

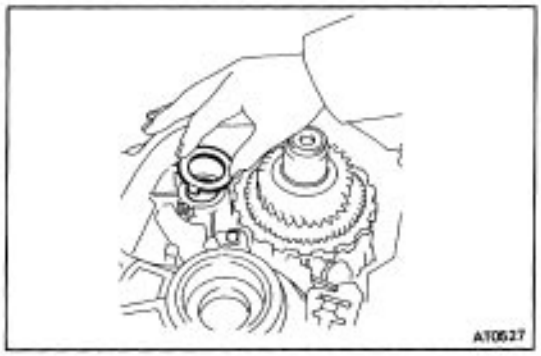

39. INSTALL GOVERNOR DRIVEN GEAR

(a) Install the thrust washer.

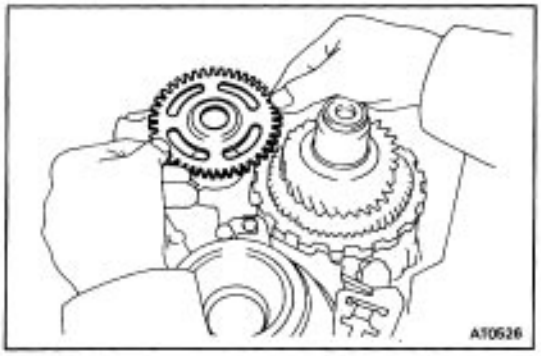

(b) Install the governor driven gear.

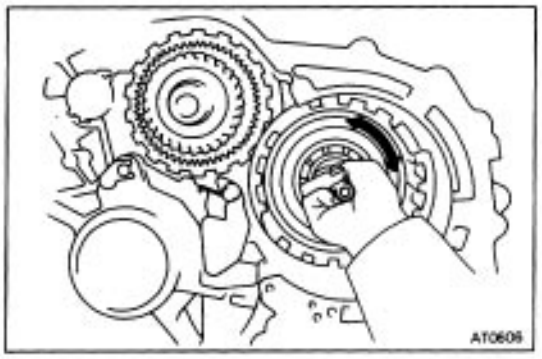

40. CHECK INTERMEDIATE SHAFT

Make sure that the intermediate shaft turns smoothly.

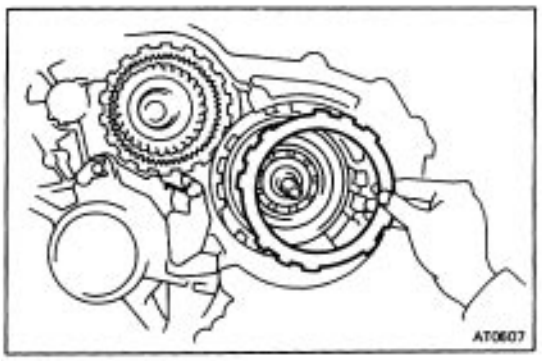

41. INSTALL FIRST AND REVERSE BRAKE DISCS, PLATES AND FLANGE

(a) Install the inner flange, facing the flat end upward.

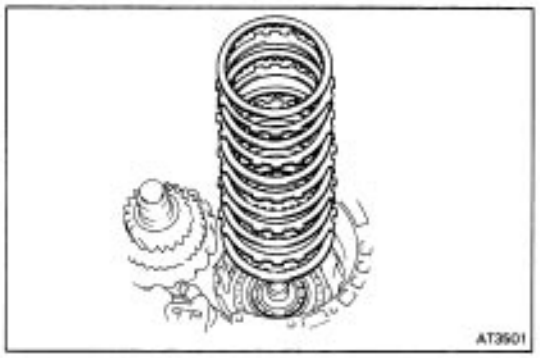

(b) Install in order: D=Disc P=Plate
D–P–D–P–D–P–D–P–D–P–D

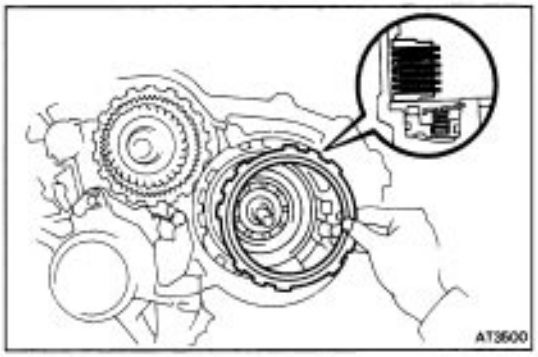

(c) Install the outer flange, the flat end facing downward.

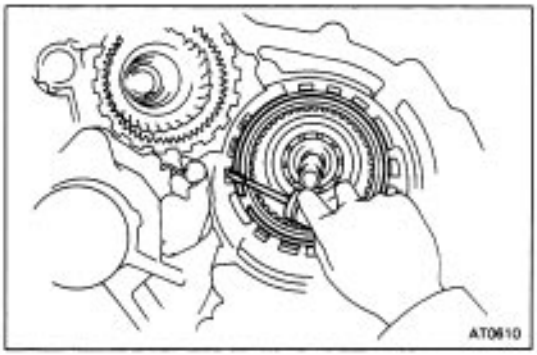

42. INSTALL SNAP RING

HINT: Be sure the snap ring end gap is not aligned with one of the cutouts.

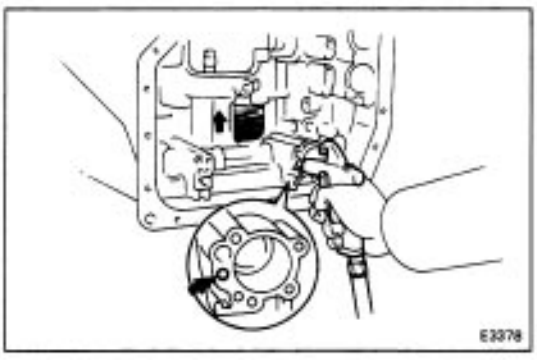

43. CONFIRM THAT FIRST AND REVERSE BRAKE PISTON MOVES

Using compressed air, confirm that the first and reverse brake piston moves smoothly.

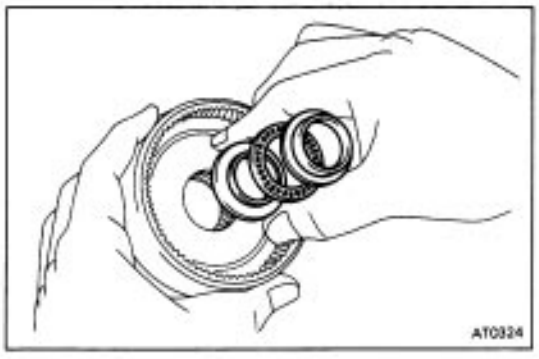

44. INSTALL REAR PLANETARY RING GEAR TO CASE

(a) Coat the races and bearing with petroleum jelly, and install them onto the ring gear as shown.

Bearing and races

mm

	Outer diameter	Inner diameter
Front Race	27.3 (1.469)	24.1 (0.949)
Bearing	37.6 (1.480)	24.0 (0.945)
Rear Race	37.6 (1.480)	22.0 (0.874)

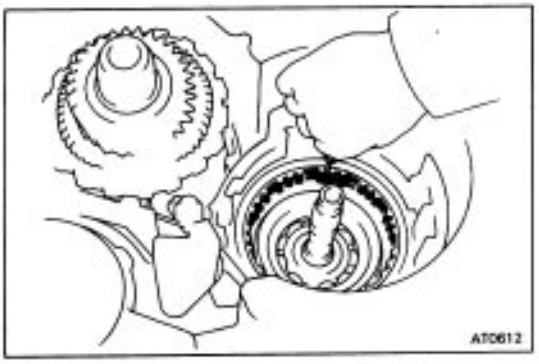

(b) Using a screwdriver, align the flukes of the discs.

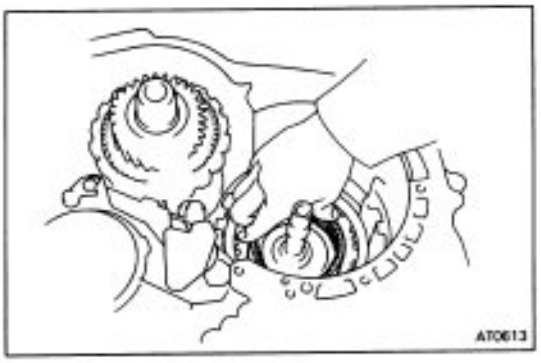

(c) Install the rear planetary ring gear into the case.

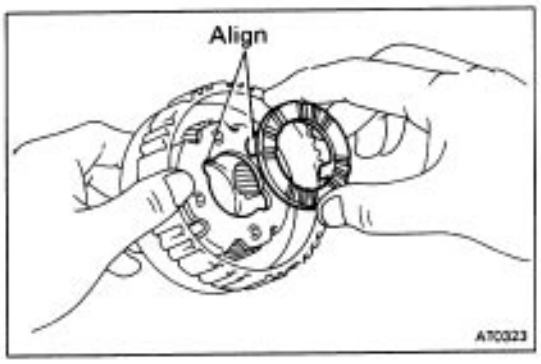

45. INSTALL REAR PLANETARY GEAR

(a) Coat thrust washer with petroleum jelly and install it onto the planetary gear.

HINT: Make sure that the different lug shapes match the openings on the gear.

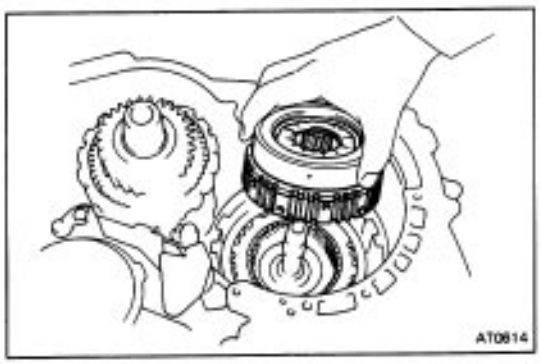

(b) Align the spline of the planetary gear with the flukes of the discs and install the planetary gear into the first and reverse brake discs.

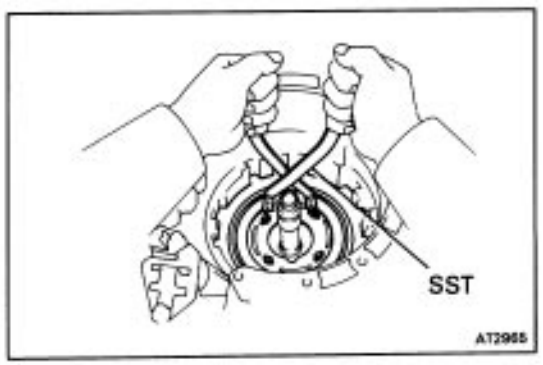

46. INSTALL NO.2 ONE–WAY CLUTCH

(a) Place the one–way clutch into the case, the shiny side facing upward.

(b) Install the one–way clutch onto the inner race while turning the planetary gear clockwise with SST.
SST 09350–32014 (09351–32050)

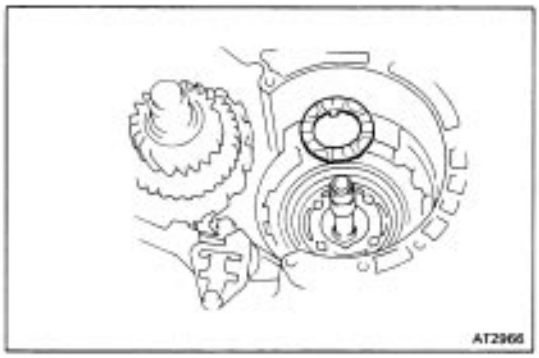

(c) Coat the thrust washer with petroleum jelly and install it onto the planetary gear.

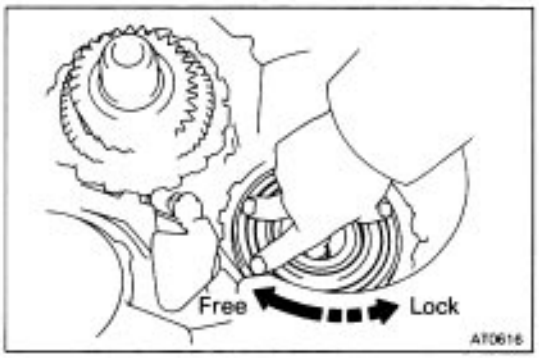

47. CHECK OPERATION OF NO.2 ONE–WAY CLUTCH

Check that the planetary carrier turns freely clockwise and locks counterclockwise.

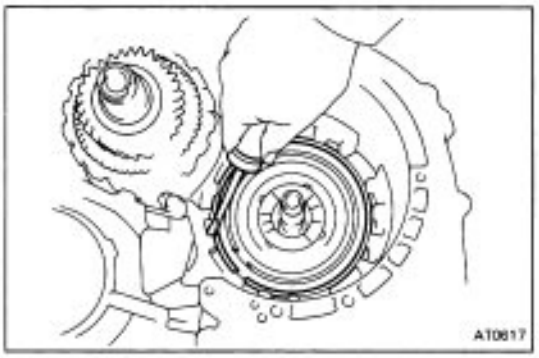

48. INSTALL SNAP RING

Be sure the end gap of the snap ring is not aligned with one of the cutouts.

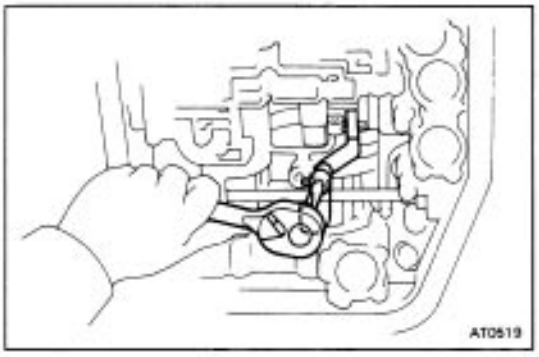

49. INSTALL SECOND COAST BRAKE BAND GUIDE

Install the band guide so that its tip touches the case.

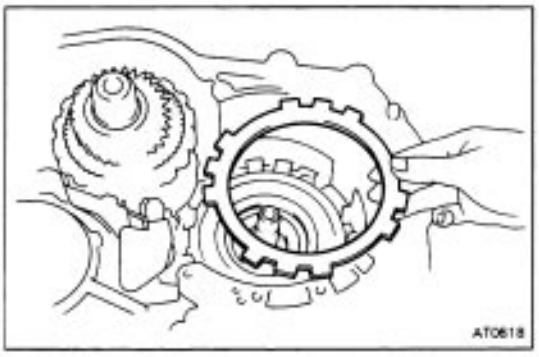

50. INSTALL SECOND BRAKE INTO CASE

(a) Install the flange, the flat side facing upward.

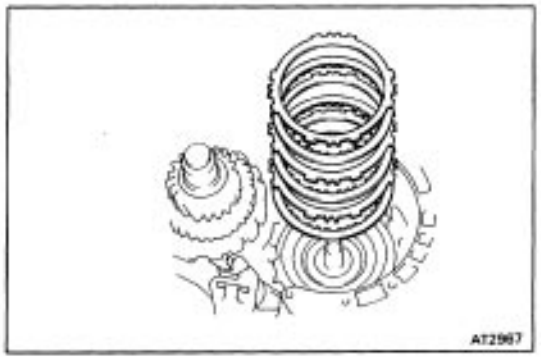

(b) Install the discs and plates in order.
D=Disc P=Plate
D –P –D –P–D –P

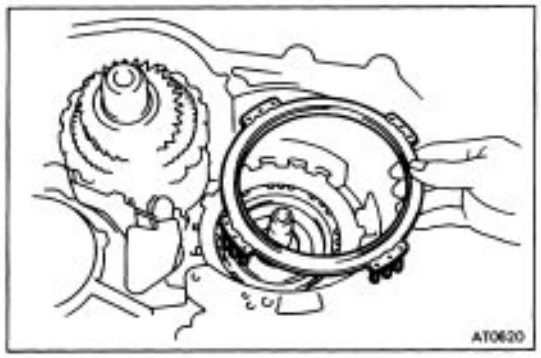

51. INSTALL SECOND BRAKE PISTON RETURN SPRING

Install each of the springs over the protrusions in the case.

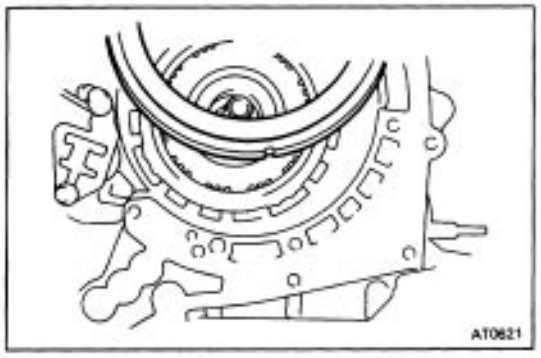

52. INSTALL SECOND BRAKE DRUM INTO CASE

Align the groove of the drum with the bolt and place it into the case.

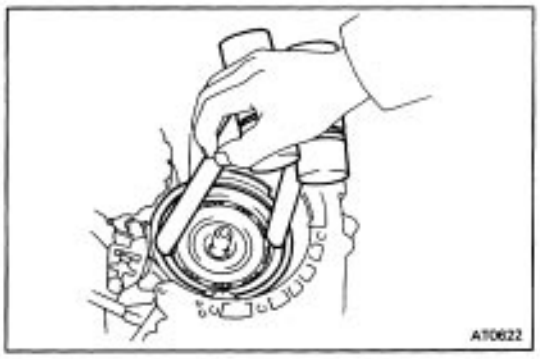

53. INSTALL SNAP RING

(a) Place the snap ring into the case so that the end gap is installed into the groove.
(b) While compressing the piston return springs over the drum with hammer handles, install the snap ring.

HINT: Be sure the end gap of the snap ring is not aligned with one of the cutouts.

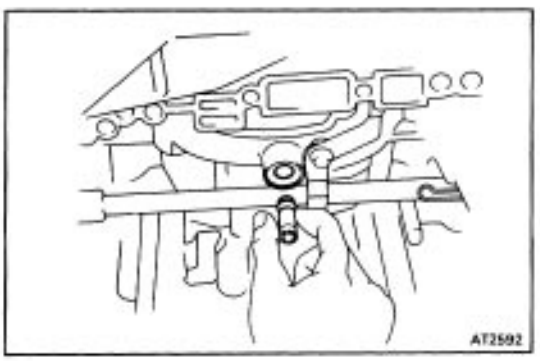

54. INSTALL SECOND BRAKE DRUM GASKET

Drive in a new drum gasket until it makes contact with the second brake drum.

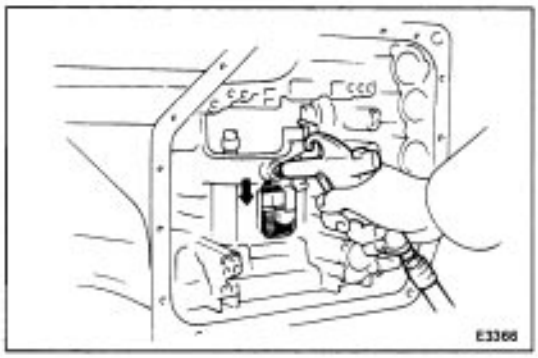

55. CONFIRM THAT SECOND BRAKE PISTON MOVES

Using compressed air, confirm that the second brake piston moves smoothly.

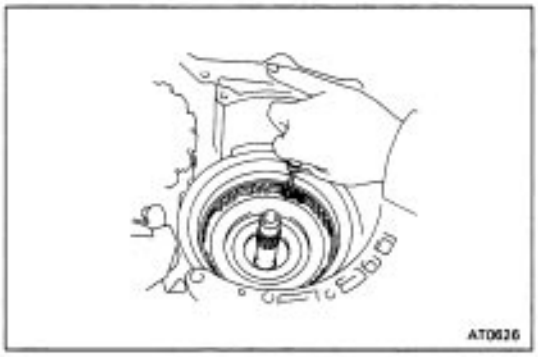

56. INSTALL SECOND BRAKE HUB AND NO.1 ONE–WAY CLUTCH

(a) Using a screwdriver, align the flukes of the discs in the second brake.

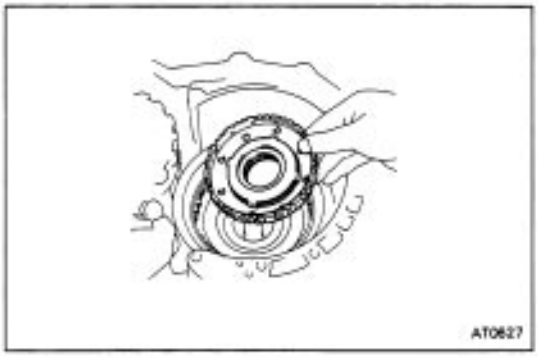

(b) Align the spline of the hub with the flukes of the discs and install the hub to the second brake discs.

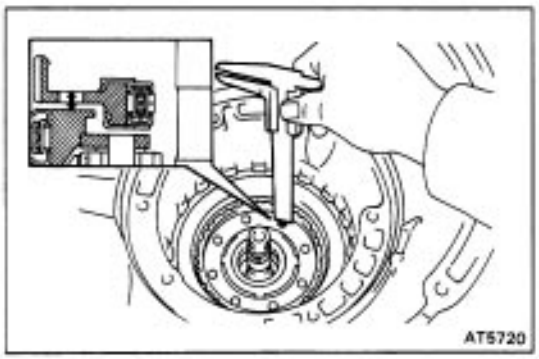

57. CHECK SECOND BRAKE HUB INSTALLATION DISTANCE

Check the distance between the surface of the second brake hub and rear planetary gear.

Distance: Approx. 5 mm (0.20 in.)

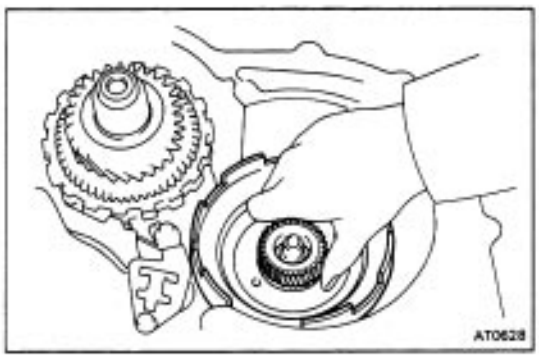

58. INSTALL SUN GEAR, SUN GEAR INPUT DRUM AND THRUST WASHER

While turning the sun gear clockwise, install it into the one–way clutch.

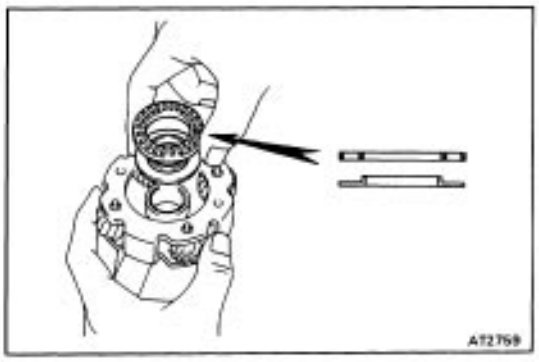

59. INSTALL FRONT PLANETARY GEAR

(a) Coat the race and bearing with petroleum jelly and install them onto the planetary gear.

Bearing and races

mm (in.)

	Outer diameter	Inner diameter
Race	45.0 (1.772)	28.0 (1.102)
Bearing	45.0 (1.772)	30.0 (1.181)

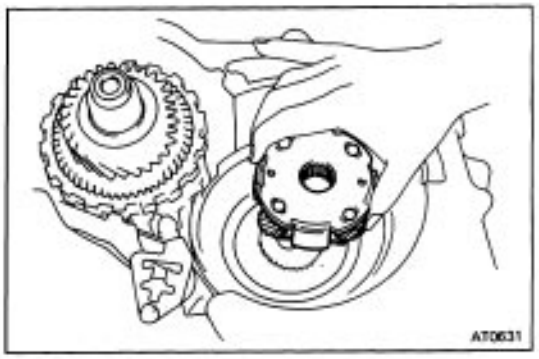

(b) Install the planetary gear.

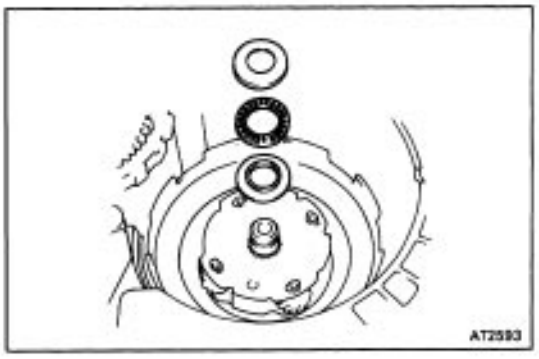

60. INSTALL FRONT PLANETARY RING GEAR

(a) Coat the races and bearing with petroleum jelly and install them onto the planetary ring gear.

Bearing and races

mm (in.)

	Outer diameter	Inner diameter
Front Race	37.9 (1.492)	22.0 (0.866)
Bearing	36.1 (1.421)	22.2 (0.874)
Rear Race	35.0 (1.378)	19.0 (0.748)

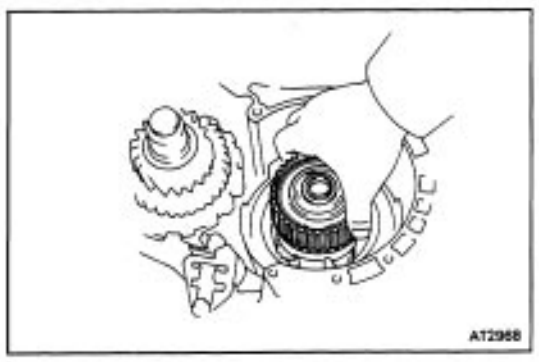

(b) Install the ring gear.

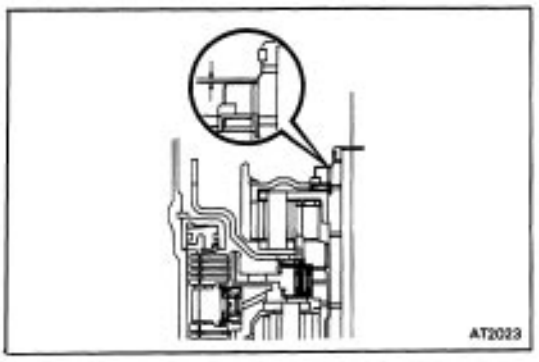

HINT: If the planetary ring gear and the other parts are installed correctly into the case, the end of the bushing with the ring gear flange will be flush with a shoulder of the intermediate shaft or under.

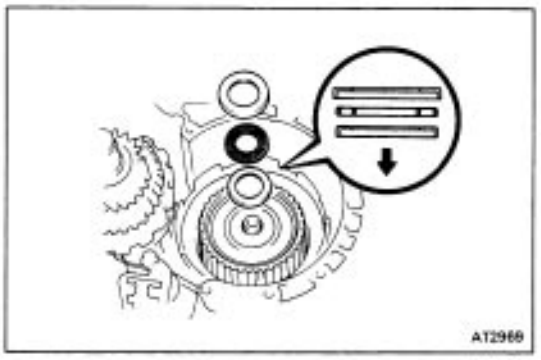

(c) Coat the races and bearing with petroleum jelly and install them onto the tip of ring gear flange as shown.

Bearing and races

mm (in.)

	Outer diameter	Inner diameter
Front Race	37.9 (1.492)	22.0 (0.866)
Bearing	36.1 (1.421)	22.2 (0.874)
Rear Race	35.7 (1.406)	23.0 (0.906)

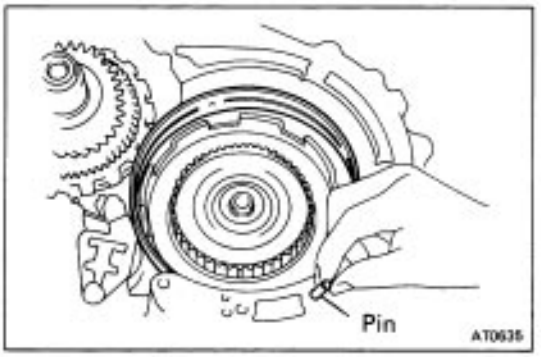

61. INSTALL SECOND COAST BRAKE BAND

(a) Place the band into the case.

(b) Install the pin through the oil pump mounting bolt hole.

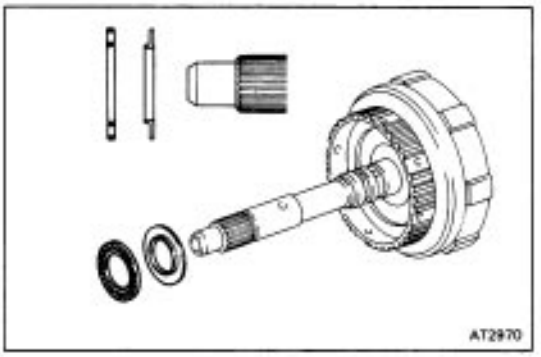

62. INSTALL FORWARD CLUTCH AND DIRECT CLUTCH

(a) Coat the race and bearing with petroleum jelly, and install them onto the forward clutch drum.

Bearing and race

mm (in.)

	Outer diameter	Inner diameter
Bearing	42.0 (1.654)	28.9 (1.138)
Race	42.0 (1.654)	27.1 (1.067)

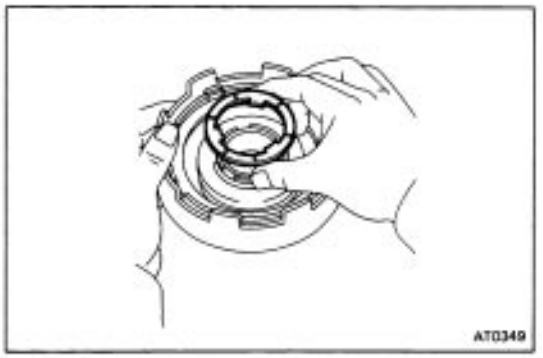

(b) Coat the clutch drum thrust washer with petroleum jelly, and install it onto the direct clutch drum with the oil groove facing upward.

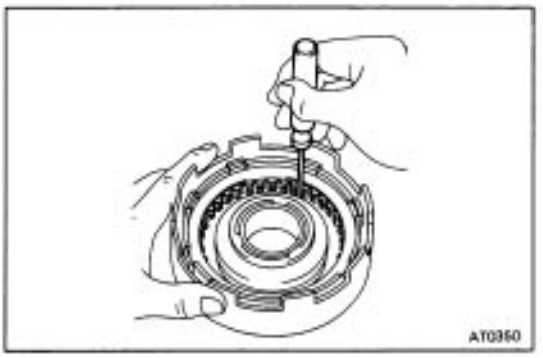

(c) Using a screwdriver, align the flukes of discs in the direct clutch.

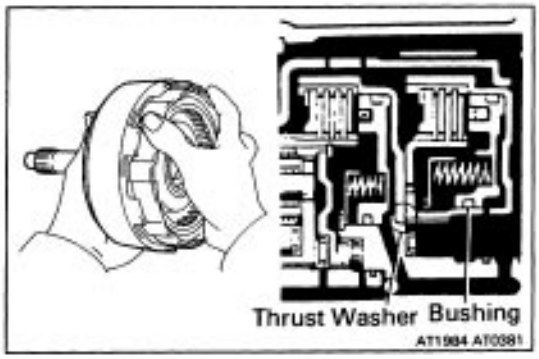

(d) Mesh the hub with the flukes of the direct clutch while turning the clutch drum or forward clutch.

HINT: If the flukes of the discs are meshed with the hub correctly, the end of the bushing with the direct clutch drum will be flush with the surface of the forward clutch.

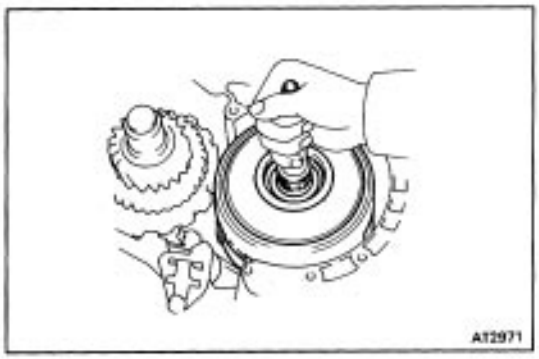

(e) Place the direct clutch and forward clutch into the case.

(f) While rotating the forward clutch to mesh the front planetary ring gear and discs, install them.

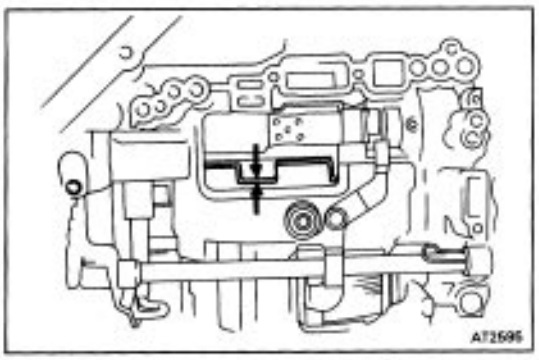

(g) Check the distance between A and B as shown in the illustration.

Distance: Approx. 3 mm (0.118 in.)

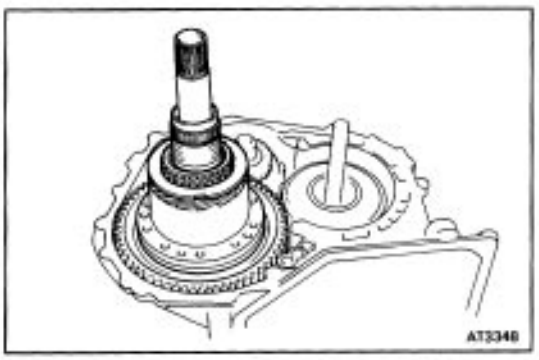

63. INSTALL DIFFERENTIAL ASSEMBLY

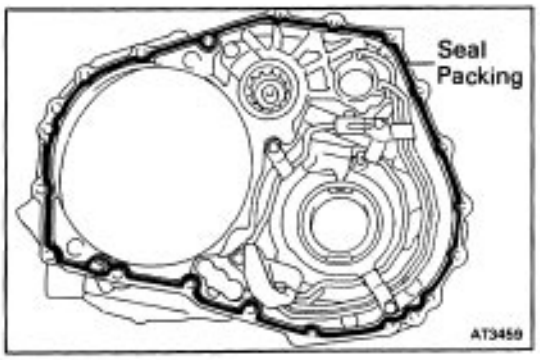

64. INSTALL TRANSAXLE HOUSING

(a) Remove any packing material and be careful not to get oil on the contacting surfaces of the transaxle housing or transmission case.

(b) Apply seal packing to the transaxle housing as shown.

Seal packing: Part No.08833–00090, THREE BOND 1131, LOCTITE 518 or equivalent

HINT: Install the transaxle housing as soon as the seal packing is applied.

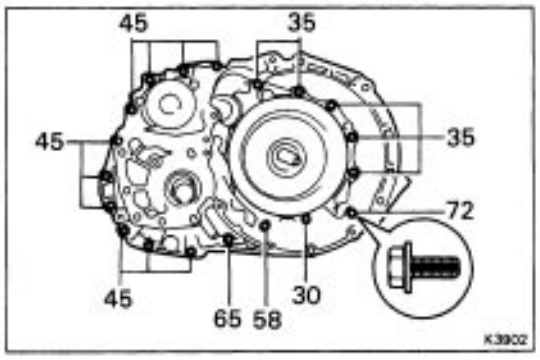

(c) Apply sealant to the bolt threads.
Sealant: Part No.08833–00080, Adhesive 1344, THREE BOND 1344, LOCTITE 242 or equivalent
(d) Install and tighten the bolts.
Torque: 300 kg–cm (22 ft–lb, 29 N–m)
HINT: Each bolt length (mm) is indicated in the illustration.

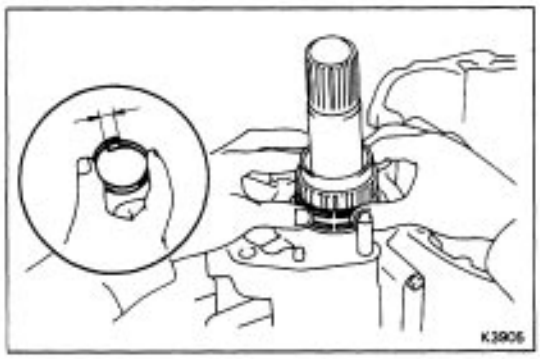

65. INSTALL OIL SEAL RINGS

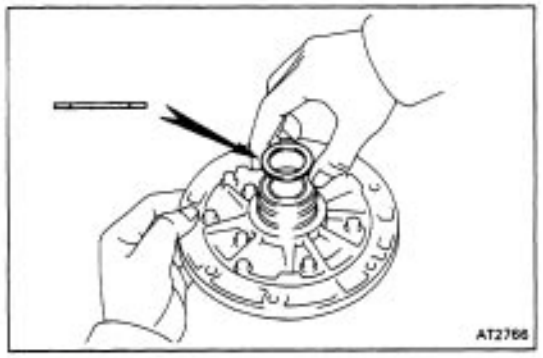

66. INSTALL OIL PUMP INTO CASE
(a) Coat the race with petroleum jelly and install it onto the stator shaft.
Race: Outer diameter 43.0 mm (1.693 in.)
Inner diameter 30.5 mm (1.201 in.)



(b) Coat the O–ring with ATF, and install it to pump body.

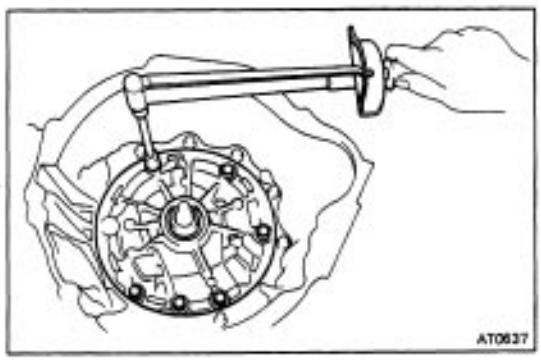

(c) Place the oil pump through the input shaft, and align the bolt holes of the pump body with the transmission case.
(d) Hold the input shaft, and lightly press the oil pump body to slide the oil seal rings on the stator shaft through the direct clutch drum.
NOTICE: Do not push on the oil pump strongly, or the oil seal ring will stick to the direct clutch drum.
(e) Install and tighten the six bolts.
Torque: 250 kg–cm (18 ft–lb, 25 N–m)

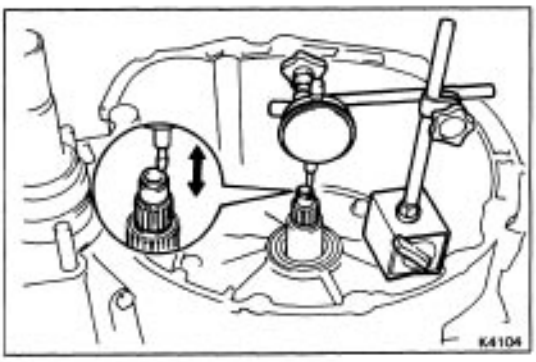

67. MEASURE THRUST PLAY OF INPUT SHAFT

Measure the thrust play in axial direction.

Thrust play: 0.3 – 0.9 mm (0.012 – 0.035 in.)

If the play is not as specified, select and replace the race for the end of the stator shaft.

HINT: There are two different thicknesses of races.

If necessary, select one of them.

Race thickness: 0.8 mm (0.031 in.)

1.4 mm (0.055 in.)

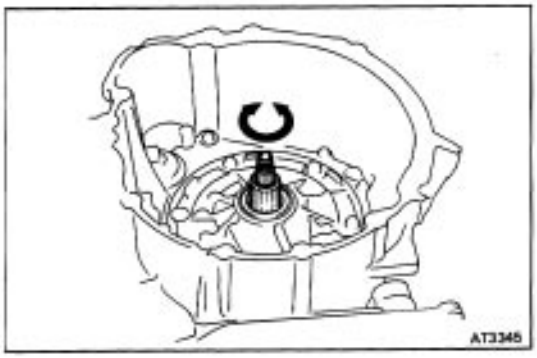

68. CHECK INPUT SHAFT ROTATION

Make sure that the input shaft rotates smoothly.

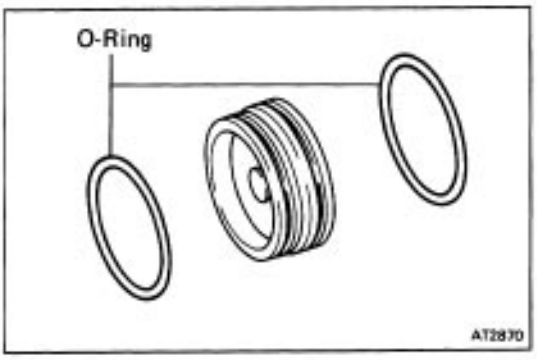

69. INSTALL SECOND COAST BRAKE PISTON

(a) Install the two new O–rings to the cover.

HINT: Coat the O–rings with ATF before installing.

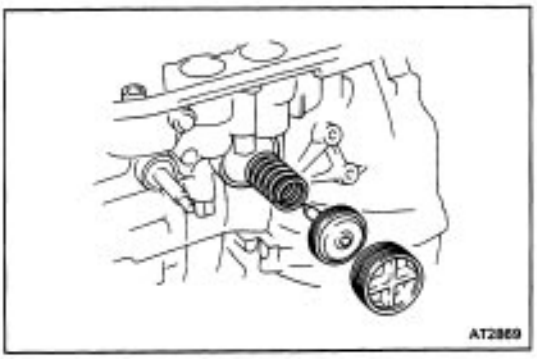

(b) Install the spring, piston and cover into the bore.

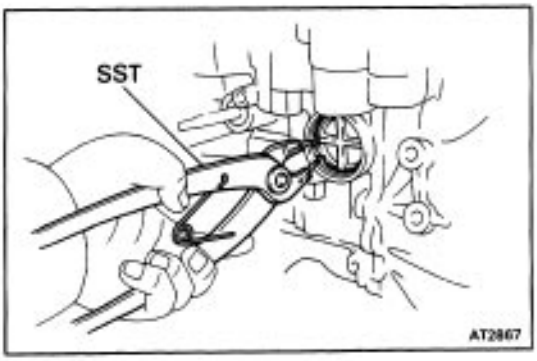

(c) Using SST, install the snap ring while pressing the cover.

SST 09350–32014 (09351–32050)

(d) Check that the front end of the piston rod contacts the center of the second brake band depression.

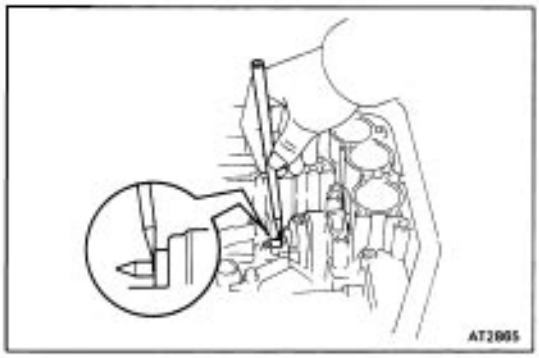

70. MEASURE PISTON STROKE OF SECOND COAST BRAKE

(a) Apply a small amount of paint to the piston rod at the point it meets the case as shown in the illustration.

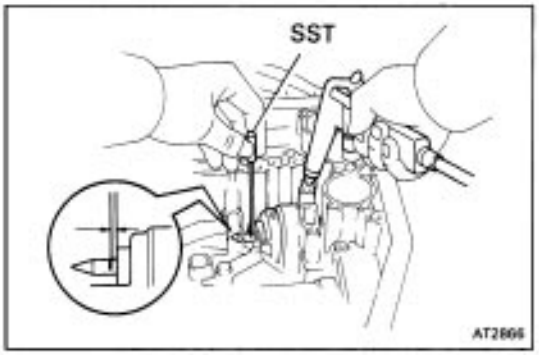

(b) Using SST, measure the piston stroke applying and releasing the compressed air (4 8 kg/cm2, 57–114 psi, 392 785 kPa) as shown.

SST 09240–00020

Piston stroke: 1.5 – 3.0 mm (0.059 – 0.118 in.)

If it is still more than standard value, replace the brake band with a new one.

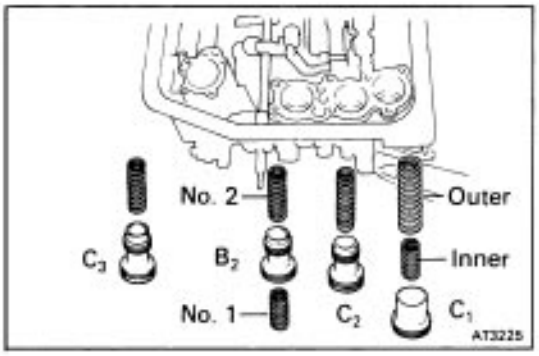

71. INSTALL ACCUMULATOR PISTONS AND SPRINGS

(a) Coat the new O–rings with ATF, and install them to the pistons.

(b) Install the pistons and springs.

Spring		Free length mm (in.)	Color
C_1	Outer	74.1 (2.917)	Pink
	Inner	41.0 (1.614)	Pink
C_2		66.2 (2.606)	Blue
B_2	No.1	36.5 (1.437)	White
	No.2	56.7 (2.232)	Yellow
C_3		62.1 (2.445)	Light Green

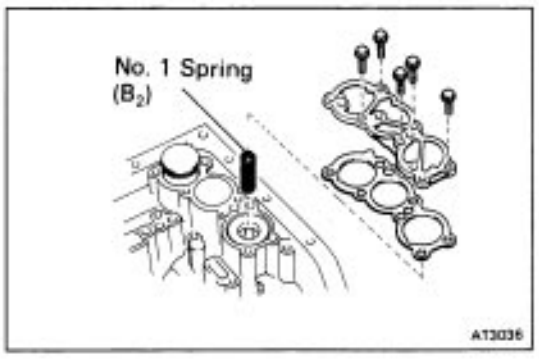

(c) Install a new gasket and accumulator cover.

(d) Tighten the five bolts shown in the illustration evenly and gradually.

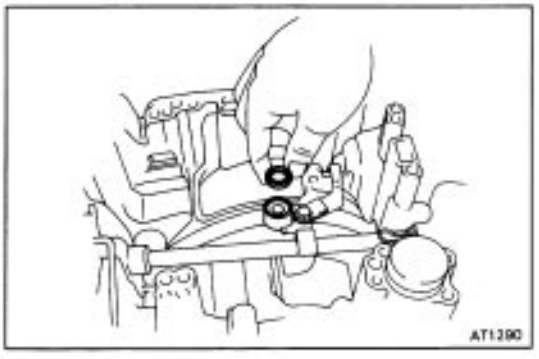

72. INSTALL SECOND BRAKE APPLY GASKET

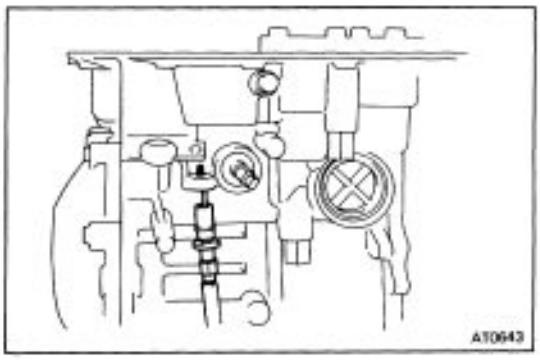

73. INSTALL THROTTLE CABLE IN CASE

Push the cable through the hole on the case, being careful not to damage the O–ring. Check for full seating.

NOTICE:Insubsequent work, to avoid breaking the cable fitting do not roll the case over the cable.

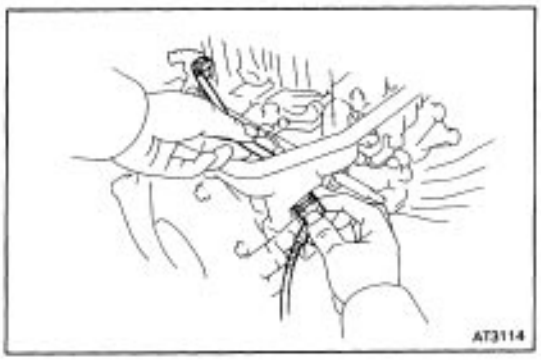

74. INSTALL O/D SOLENOID WIRE

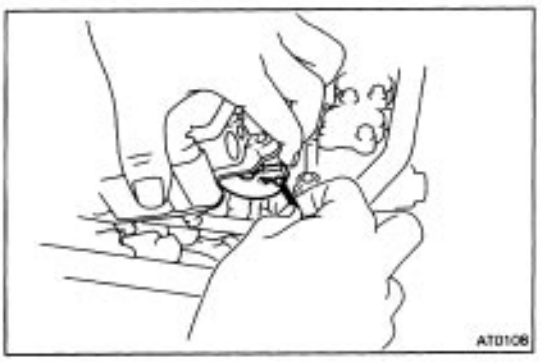

75. INSTALL VALVE BODY

(a) Place the valve body on the transmission.

(b) While holding the cam down with your hand, slip the cable end into the slot.

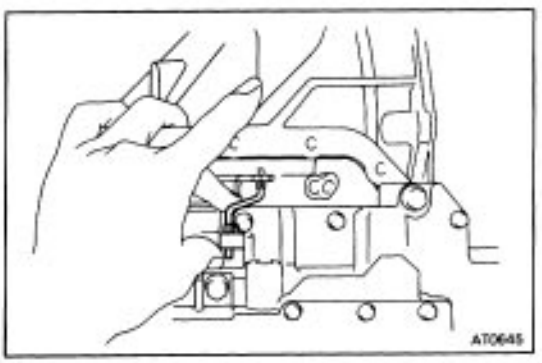

(c) Connect the connecting rod to the manual valve lever.

(d) Lower the valve body in place.

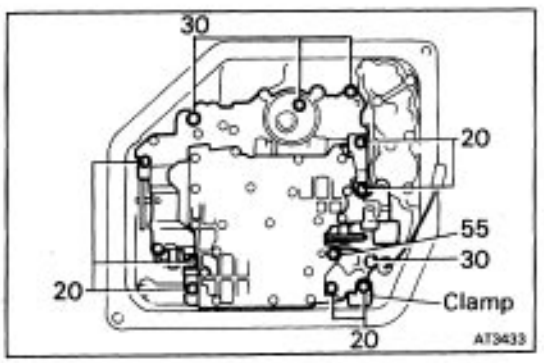

(e) Install the twelve bolts and wire retainer shown in the illustration, and hand tighten all the bolts first. Then tighten them with a torque wrench.

HINT: Each bolt length (mm) is indicated in the illustration.

Torque: 100 kg–cm (7 ft–lb, 10 N–m)

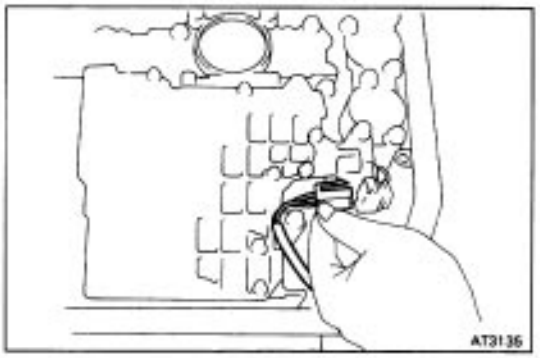

76. CONNECT O/D SOLENOID CONNECTOR

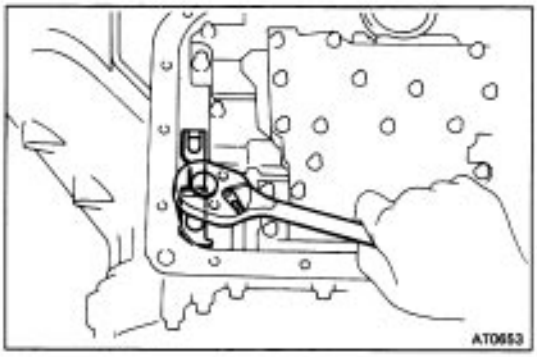

77. INSTALL MANUAL DETENT SPRING

(a) Install the detent spring and cover in place, and install the bolt (length: 16 mm).

(b) Hand tighten the bolt first, then tighten the bolt with a torque wrench.

Torque: 100 kg–cm (7 ft–lb, 10 N–m)

(c) Check that the manual valve lever is in contact with the center of the roller at the tip of the detent spring.

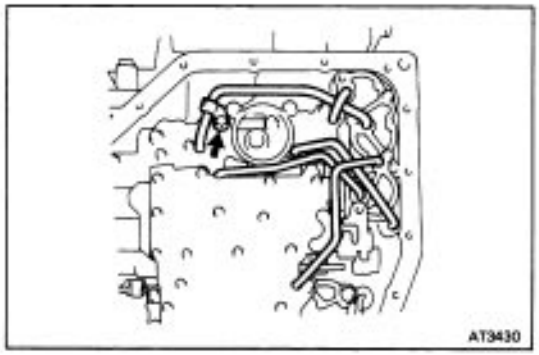

78. INSTALL OIL TUBES

(a) Tap the tubes with a plastic hammer to install them into the positions indicated in the illustration.

NOTICE: Be careful not to bend or damage the tubes.

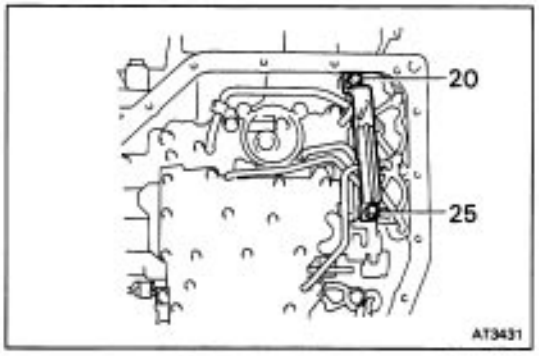

(b). Install the oil tube clamp and bracket.

HINT: Each bolt length (mm) is indicated in the illustration. Hand tighten all bolts first, then tighten them with a torque wrench.

Torque: 100 kg–cm (7 ft–lb, 10 N–m)

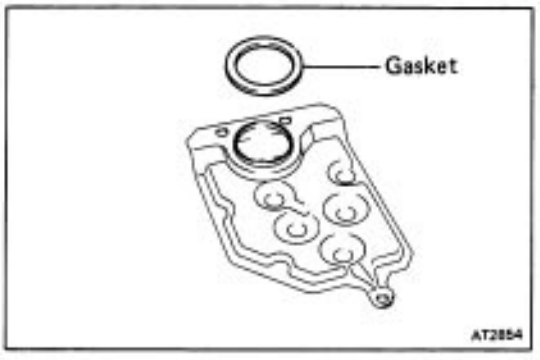

79. INSTALL OIL STRAINER

(a) Install a new gasket to the oil strainer.

(b) Install the oil strainer with the three bolts.
HINT: Each bolt length (mm) is indicated in the illustration.

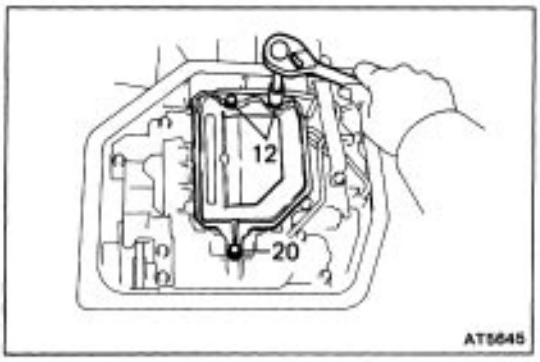

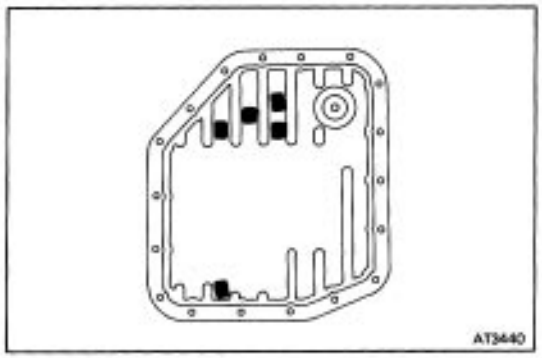

80. INSTALL FIVE MAGNETS IN OIL PAN

NOTICE: Make sure that the magnets do not interfere with the oil tubes.

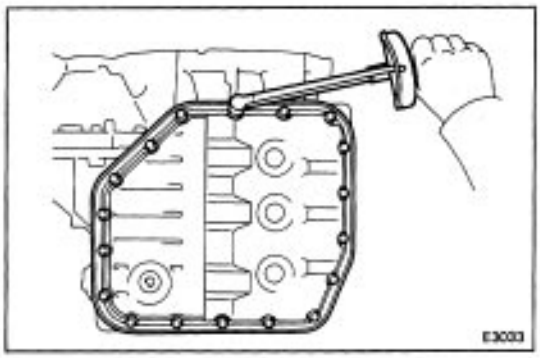

81. INSTALL OIL PAN

(a) Install a new gasket to the oil pan and install them to the transmission.

(b) Tighten the eighteen bolts.

Torque: 50 kg–cm (43 in.–lb, 4.9 N–m)

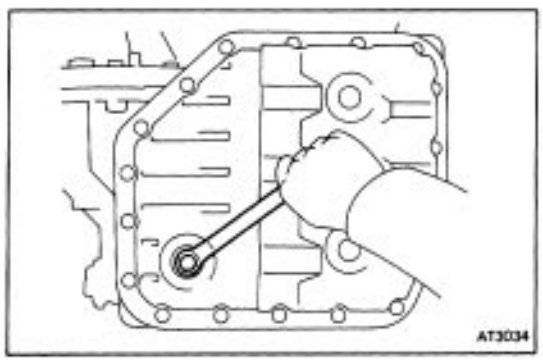

(c) Install a new gasket to the drain plug and install it to the oil pan.

Torque: 175 kg–cm (13 ft–lb, 17 N–m)

82. INSTALL GOVERNOR BODY

(a) Install the oil strainer.



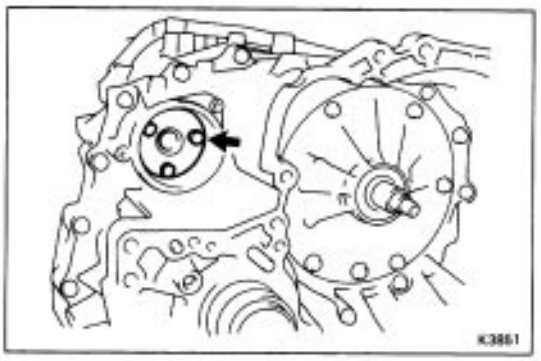

(b) Install a new gasket to governor body adaptor.
(c) Install the governor body adaptor with three bolts.

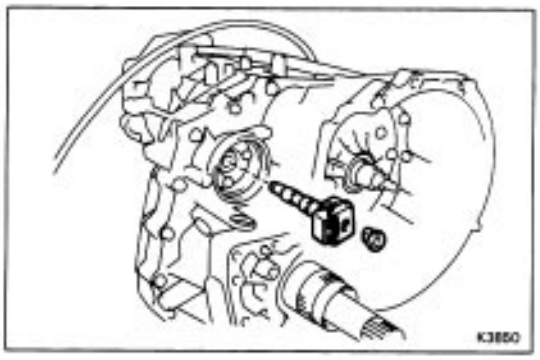

(d) Install the governor body and thrust washer.

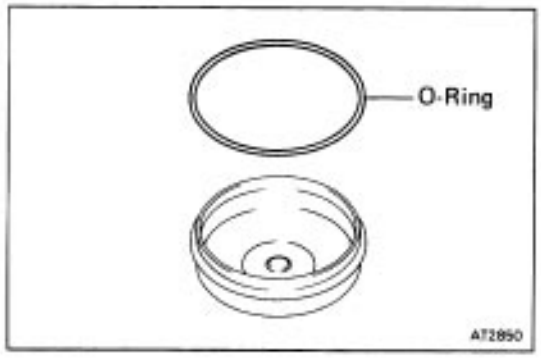

(e) Install a new O–ring to the cover.

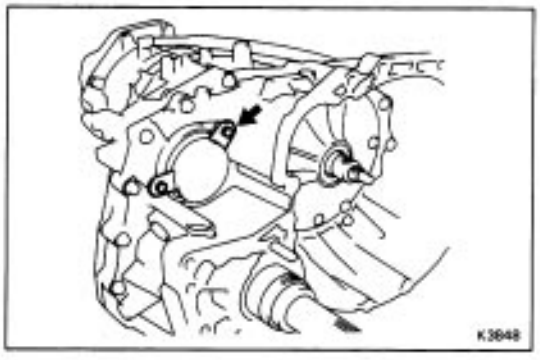

Install the cover to the transmission and then install the two cover brackets with the two bolts.

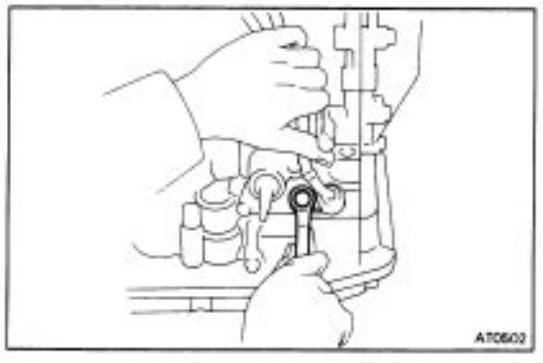

83. INSTALL SOLENOID WIRE RETAINING PLATE

Install the retaining plate with the bolt.

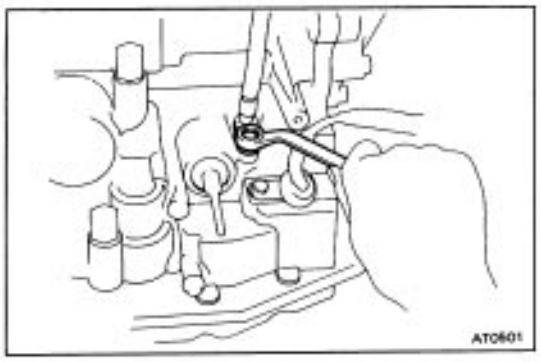

84. INSTALL THROTTLE CABLE RETAINING PLATE

Install the retaining plate with the bolt.

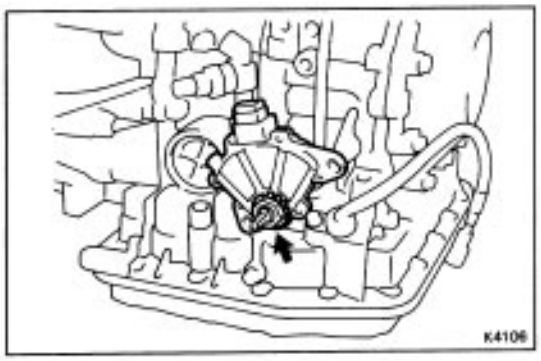

85. INSTALL NEUTRAL START SWITCH

(a) Install the neutral start switch to the manual valve shaft.
(b) Install the packing, nut stopper and nut.
(c) Tighten the nut.
Torque: 70 kg–cm (61 in.–lb, 6.9 N–m)

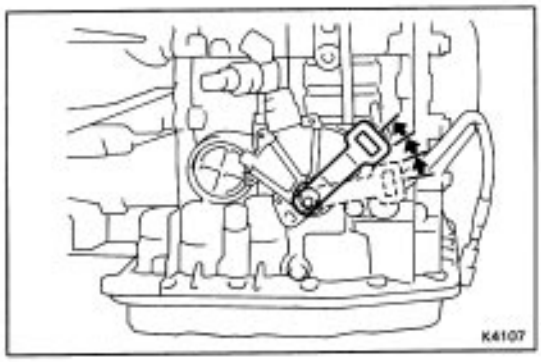

(d) Temporarily install the manual shift lever.
(e) Turn the lever clockwise until it stops, then turn it counterclockwise three notches.
(f) Remove the manual shift lever.

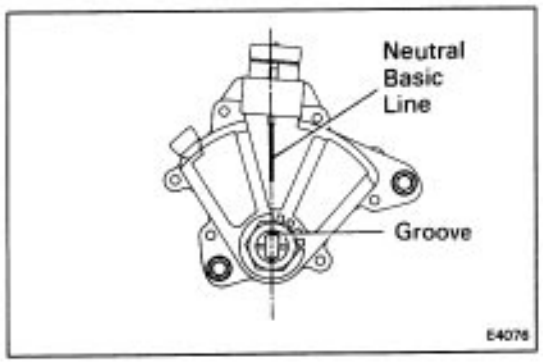

(g) Align the groove and neutral basic line as shown.
(h) Install and tighten the two bolts.
Torque: 55 kg–cm (48 in.–lb, 5.4 N–m)

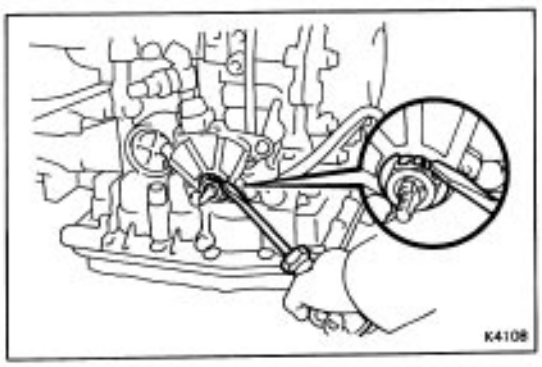

(i) Using a screwdriver, stake the nut with the nut stopper.

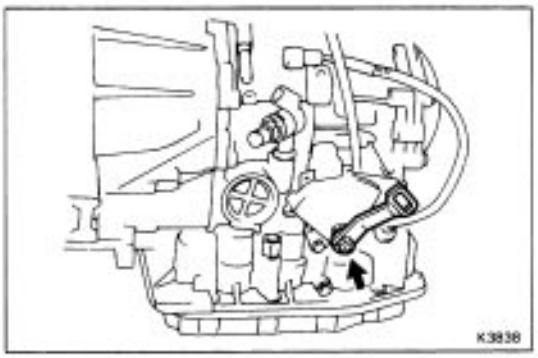

Install the manual shift lever with the washer, and tighten the nut.
Torque: 130 kg–cm (9 ft–lb, 13 N–m)

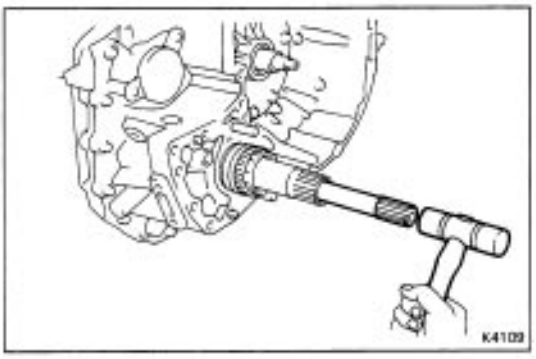

86. INSTALL DIFFERENTIAL SIDE GEAR INTERMEDIATE SHAFT

(a) Install a new snap ring to the shaft groove.
(b) Using a plastic hammer, install the shaft.

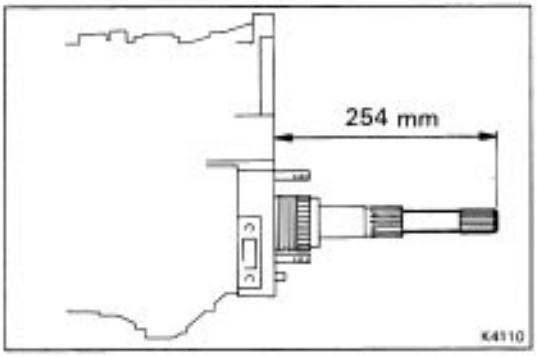

HINT: Keeping the intermediate shaft on the pinion shaft of differential, measure the point in the illustration.
Protrusion length (Reference): 254 mm (10.0 in.)

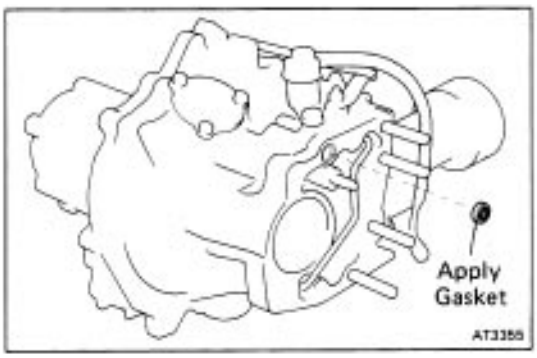

87. INSTALL APPLY GASKET

Install a new apply gasket to the transfer left case.

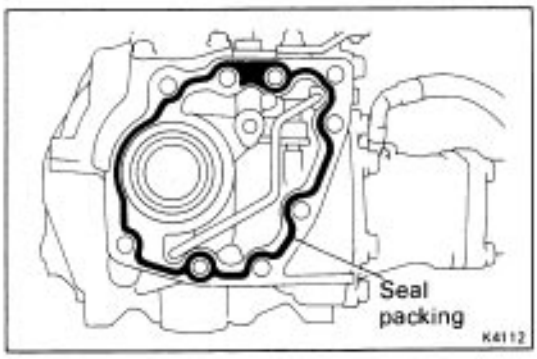

88. INSTALL TRANSFER ASSEMBLY

(a) Remove any packing material and be careful not to drop oil on the contacting surfaces of the transfer and transaxle.
(b) Apply seal packing to the transfer as shown in the illustration.
Seal packing: Part No. 08833–00090, Adhesive 1131, THREE BOND 1131, LOCTITE 518, or equivalent

HINT: Install the transfer assembly as soon as the seal packing is applied.

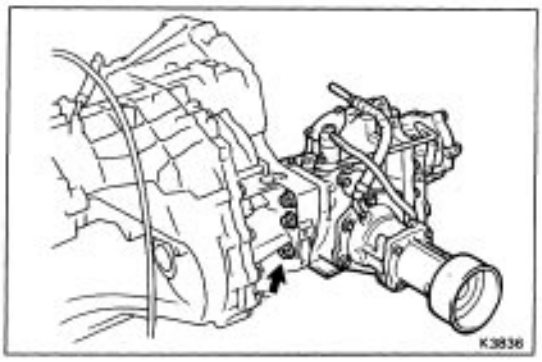

(c) Install and torque the six nuts.
Torque: 700 kg–cm (51 ft–lb, 69 N–m)

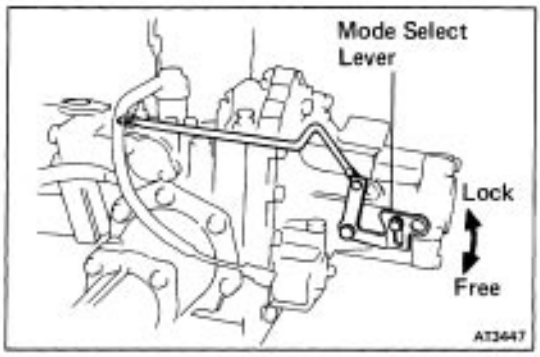

89. INSPECT MODE SELECT LEVER POSITION

After finishing inspection or repair the transaxle, be sure the mode select lever position to FREE mode and attach the lock bolt.

SHIFT LOCK SYSTEM DESCRIPTION

To minimize the possibility of incorrect operation of the automatic transaxle, a shift lock system is fitted in all AT models of ’90 Corolla.

The shift lock system consists of two mechanisms, a shift lock mechanism and a key interlock mechanism.

	Mechanism	Functions
Shift lock system	Shift lock	Shifting from ”P” range to other ranges can only be performed when the brake pedal is depressed. Also, when the ignition key is in the LOCK or ACC positions, shifting cannot be performed.
	Key interlock	The ignition key cannot be removed unless the shift lever is put into ”P” range.

In addition to these two mechanisms, a shift lock override button is provided for manual cancellation of the shift lock mechanism. However, when the ignition key is in lock position, the shift lock mechanism cannot be cancelled by operating the overdrive button.

The shift lock control system consists of the shift lock solenoid, shift lock control switch, shift lock control computer, parking lock cable, shift lock override button and stop light switch.

Component	Function
Parking lock cable	Regulates movement of ignition key cylinder.
Shift lock solenoid	Regulates shift lever operation in ”P” range.
Shift lock control switch	Detects shift lever position and operating condition of shift lever button and sends signals to shift lock control computer.
Stop light switch	Sends brake signal to shift lock control computer.
Shift lock control computer	Receives input signals from shift lock control switch and stop light switch and controls operation of the shift lock solenoid.
Shift lock override button	Manually cancels shift lock mechanism.

COMPONENTS AND CIRCUIT

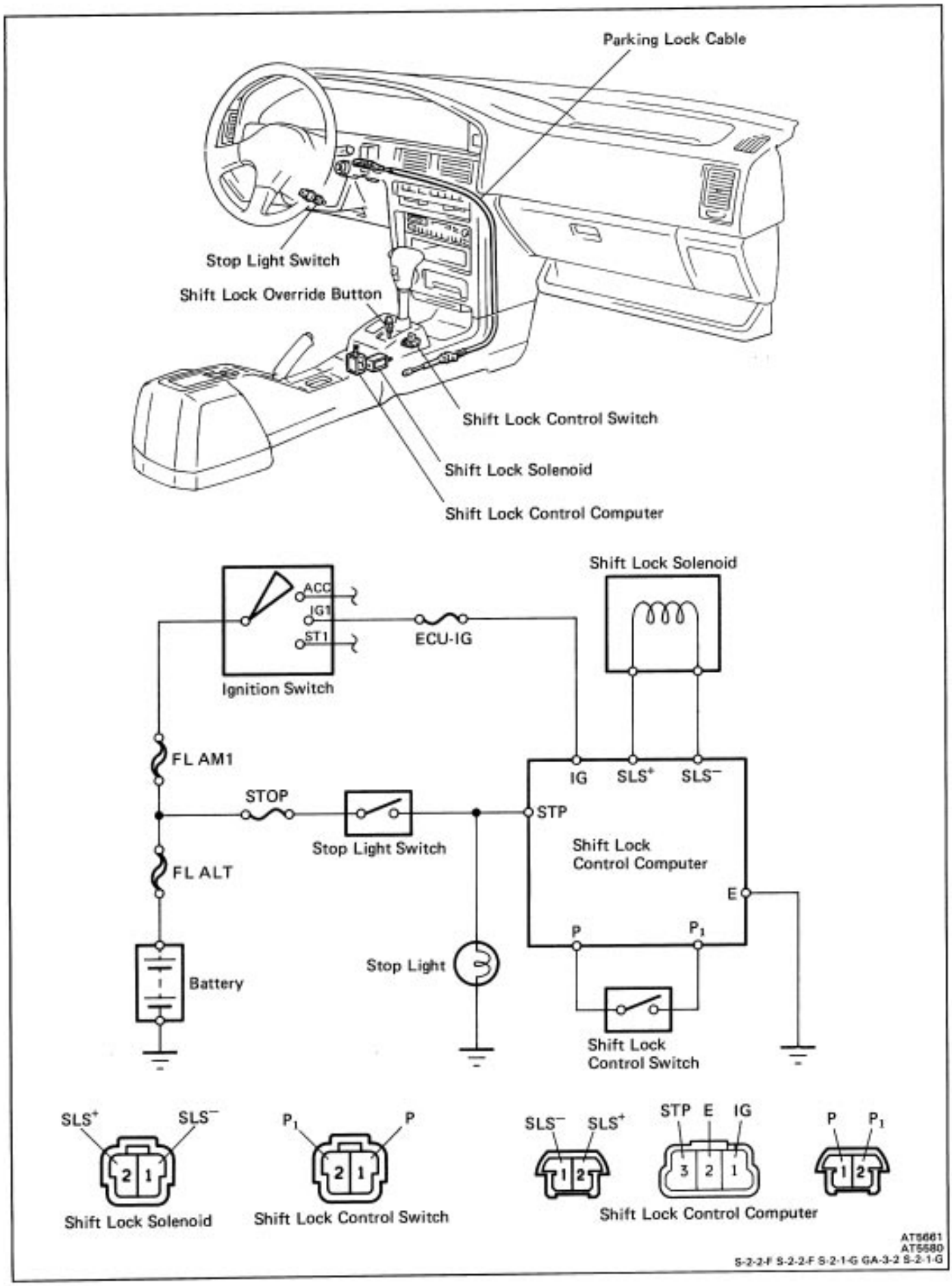

REMOVAL OF PARKING LOCK CABLE

1. REMOVE REAR AND FRONT CONSOLE BOX
(See page BO–78)

2. REMOVE ENGINE HOOD RELEASE LEVER, LOWER FINISH NO. 1 PANEL AND STEERING COLUMN COVERS
(See page BO–78)

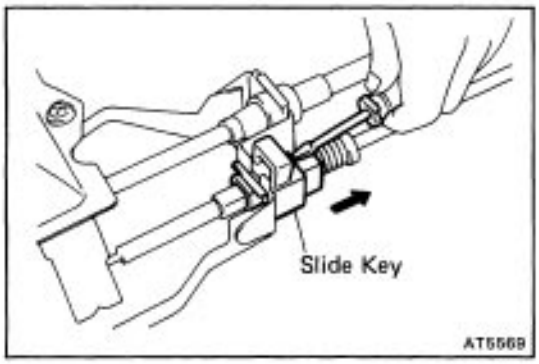

3. REMOVE PARKING LOCK CABLE FROM SHIFT LEVER ASSEMBLY

(a) Using a small screwdriver, unlock the slide key of the parking lock cable.

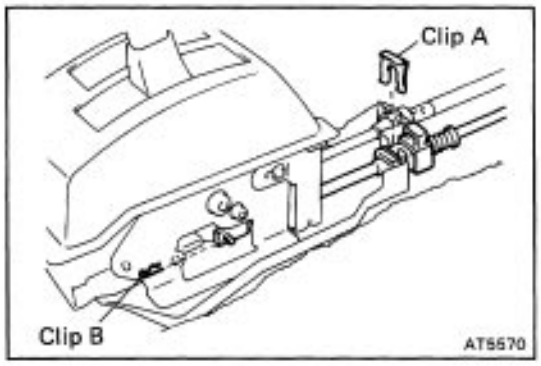

(b) Remove clips A and B of the parking lock cable.

(c) Remove the parking lock cable from the shift lever assembly.

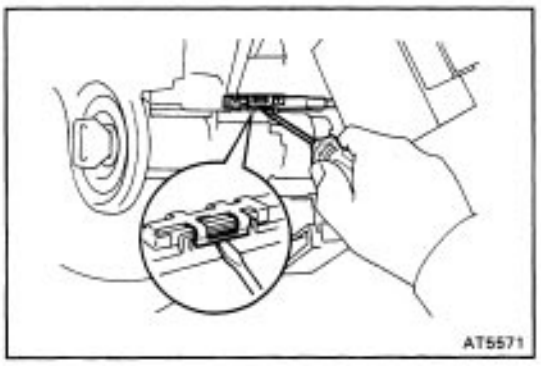

4. REMOVE PARKING LOCK CABLE FROM KEY CYLINDER

(a) Using a screwdriver, disconnect the cable from the key cylinder.

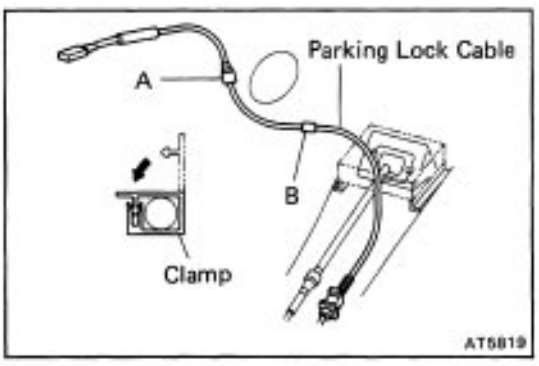

(b) Remove the parking lock cable from clamps A and B.

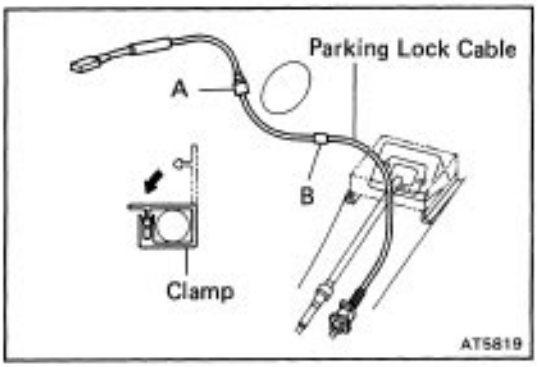

INSTALLATION AND ADJUSTMENT OF PARKING LOCK CABLE

1. INSTALL PARKING LOCK CABLE TO KEY CYLINDER

(a) Place the parking lock cable as shown in the figure to the left, and fix it in place with clamps A and B.
Install the cable so that the cable stopper is above clamp B.

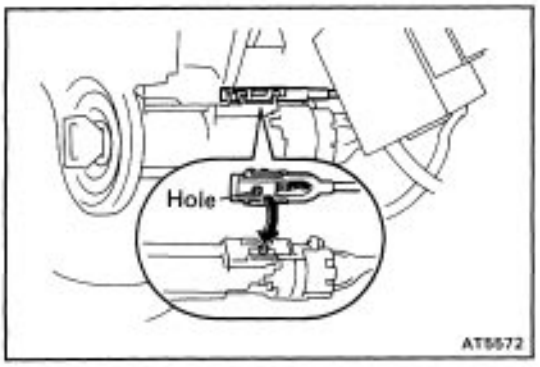

(b) Align the protrusion of the key cylinder and cable end hole.
(c) Connect the parking lock cable to the key cylinder.

2. INSTALL PARKING LOCK CABLE TO SHIFT LEVER ASSEMBLY

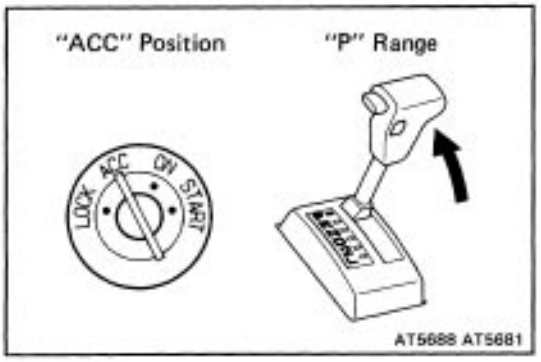

(a) Turn the ignition key to the ACC position and shift into ”P” range position.

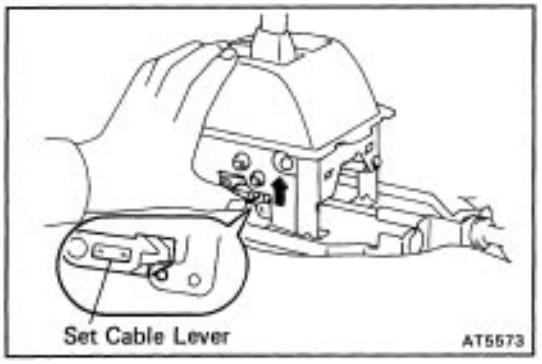

(b) Push the set cable lever up into the position shown in the figure to the left.

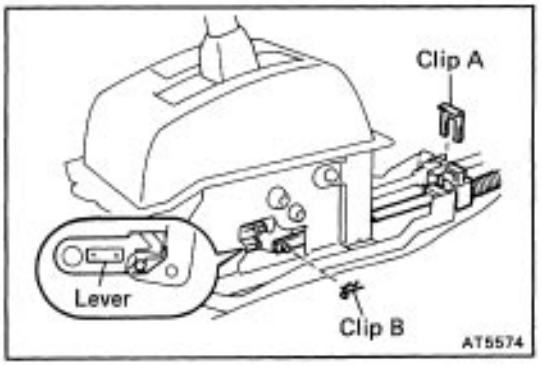

(c) While pushing the shift lock override button, shift the shift lever into ”N” range.
HINT: Check that the set cable lever is positioned as shown in the illustration on the left.
(d) Install parking lock cable and clip A and B.

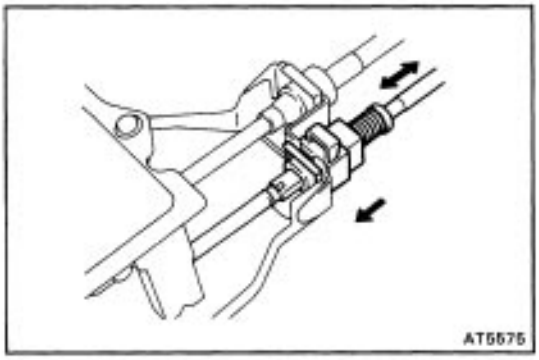

(e) Pull on the parking lock cable to remove any looseness.
NOTICE: Do not pull strongly on the parking lock cable.
(f) Lock the slide key of the parking lock cable.

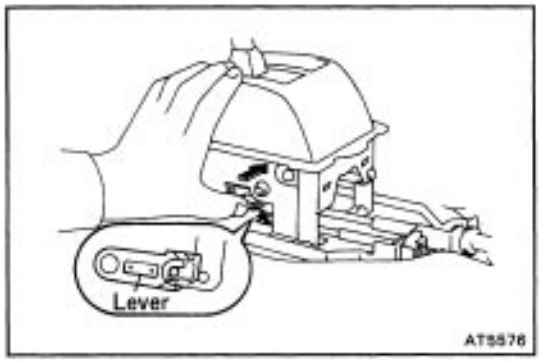

(g) Lightly push the set cable lever in direction A.
HINT: Due to the spring force, the set cable lever will go down to the position shown in the figure.

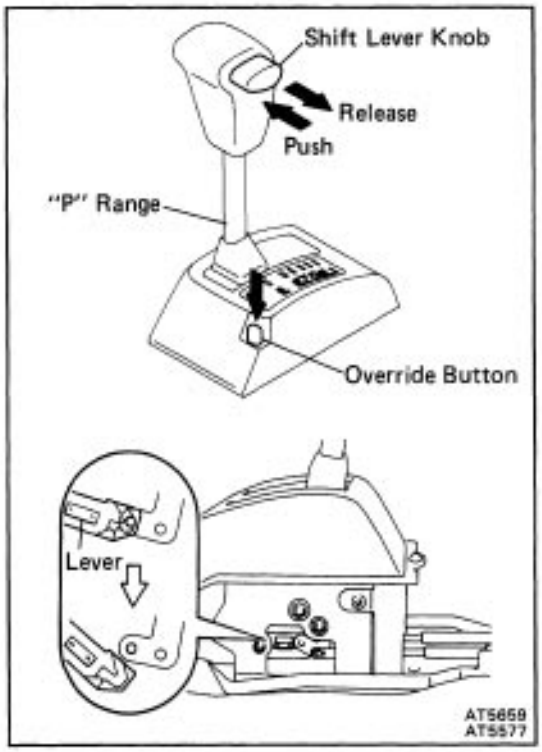

(h) Shift the shift lever into "P" range.
(i) While pushing the shift lock override button, push the shift lever knob and then release it.
HINT: Check that the set cable lever is released.

3. INSTALL STEERING COLUMN COVERS, LOWER FINISH NO. 1 PANEL AND ENGINE HOOD RELEASE LEVER
(See page BO–78)
4. INSTALL FRONT AND REAR CONSOLE BOX
(See page BO–78)

INSPECTION OF ELECTRIC CONTROL COMPONENTS

1. INSPECT SHIFT LOCK CONTROL COMPUTER

Do not disconnect the computer connector.

Measure the voltage and continuity between terminals.



Connector A

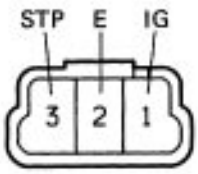

Connector B

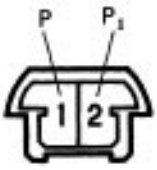

Connector C

S-2-1-G GA-3-2 S-2-1-G

Connector	Terminal	Measured Item	Measuring Condition	Specified Value
A	SLS⁻ – E	Continuity	All conditions	Continuity
	SLS⁺ – E	Voltage	① Ignition switch ON position and "P" range	0 V
			② ① and Depress brake pedal	8.5 ~ 13.5 V
			③ ② and Shift to range other than "P" range or and ② Release brake pedal	0 V
B	IG – E	Voltage	Ignition switch ON position	10 ~ 14 V
	E – Ground	Continuity	All conditions	Continuity
	STP – E	Voltage	Depress brake pedal	10 ~ 14 V
			Release brake pedal	0 V
C	P – E	Continuity	All conditions	Continuity
	P₁ – E	Continuity	"P" range	Continuity
			Other than "P" range	No continuity

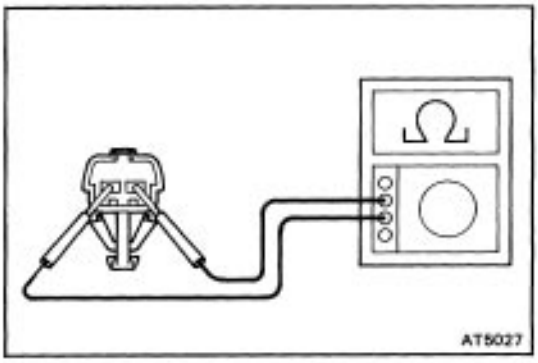

2. INSPECT SHIFT LOCK SOLENOID

(a) Disconnect the solenoid connector.

(b) Using an ohmmeter, measure the resistance between terminals.

Standard resistance: 28 – 31 Ω

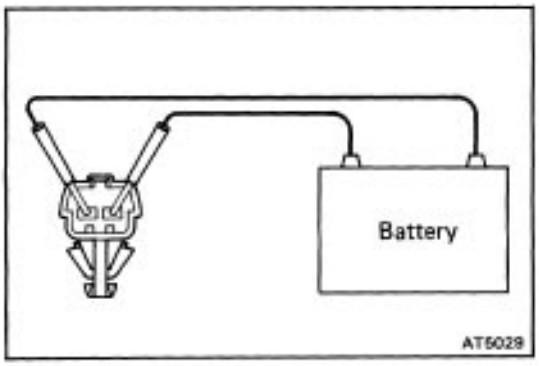

(c) Apply battery voltage between terminals. Check that an operation noise can be heard from the solenoid.

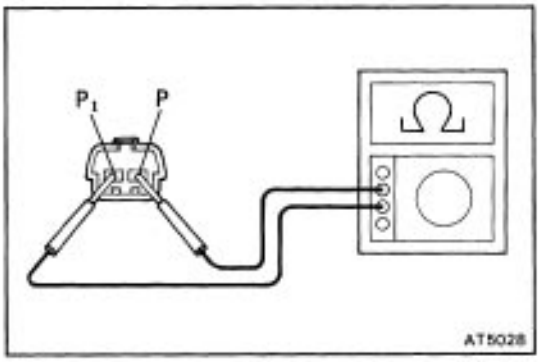

3. INSPECT SHIFT LOCK CONTROL SWITCH

(a) Disconnect the shift lock control switch connector.

(b) Check whether there is continuity between terminals.

O—O : Continuity

Shift Position \ Terminal	P	P1
P range (Release button is not pushed)	O—O	
R, N, D, 2, L range		

STANDARD BOLT TORQUE SPECIFICATIONS

STANDARD BOLT TORQUE SPECIFICATIONS

HOW TO DETERMINE BOLT STRENGTH

	Mark	Class		Mark	Class
Hexagon head bolt	 Bolt head No. 4– 5– 6– 7– 8– 9– 10– 11–	4T 5T 6T 7T 8T 9T 10T 11T	Stud bolt	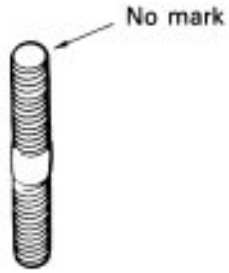 No mark	4T
	 No mark	4T		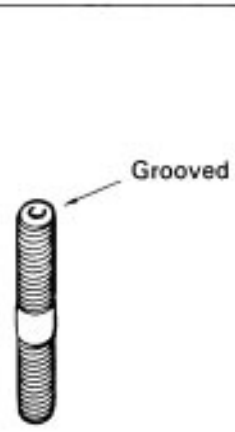 Grooved	6T
Hexagon flange bolt w/washer hexagon bolt	 No mark	4T			
Hexagon head bolt	 Two protruding lines	5T			
Hexagon flange bolt w/washer hexagon bolt	 Two protruding lines	6T	Welded bolt	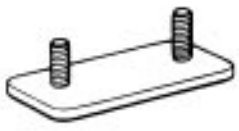	4T
Hexagon head bolt	 Three protruding lines	7T			
Hexagon head bolt	 Four protruding lines	8T			

SPECIFIED TORQUE FOR STANDARD BOLTS

Class	Diameter mm	Pitch mm	Specified torque					
			Hexagon head bolt			Hexagon flange bolt		
			kg-cm	ft-lb	N·m	kg-cm	ft-lb	N·m
4T	6	1	55	48 in.-lb	5	60	52 in.-lb	6
	8	1.25	130	9	12.5	145	10	14
	10	1.25	260	19	26	290	21	29
	12	1.25	480	35	47	540	39	53
	14	1.5	760	55	74	850	61	84
	16	1.5	1,150	83	115	—	—	—
5T	6	1	65	56 in.-lb	6.5	75	65 in.-lb	7.5
	8	1.25	160	12	15.5	175	13	17.5
	10	1.25	330	24	32	360	26	36
	12	1.25	600	43	59	670	48	65
	14	1.5	930	67	91	1,050	76	100
	16	1.5	1,400	101	140	—	—	—
6T	6	1	80	69 in.-lb	8	90	78 in.-lb	9
	8	1.25	195	14	19	210	15	21
	10	1.25	400	29	39	440	32	44
	12	1.25	730	53	71	810	59	80
	14	1.5	1,100	80	110	1,250	90	125
	16	1.5	1,750	127	170	—	—	—
7T	6	1	110	8	10.5	120	9	12
	8	1.25	260	19	25	290	21	28
	10	1.25	530	38	52	590	43	58
	12	1.25	970	70	95	1,050	76	105
	14	1.5	1,500	108	145	1,700	123	165
	16	1.5	2,300	166	230	—	—	—
8T	8	1.25	300	22	29	330	24	33
	10	1.25	620	45	61	690	50	68
	12	1.25	1,100	80	110	1,250	90	120
9T	8	1.25	340	25	34	380	27	37
	10	1.25	710	51	70	790	57	78
	12	1.25	1,300	94	125	1,450	105	140
10T	8	1.25	390	28	38	430	31	42
	10	1.25	800	58	78	890	64	88
	12	1.25	1,450	105	140	1,600	116	155
11T	8	1.25	430	31	42	480	35	47
	10	1.25	890	64	87	990	72	97
	12	1.25	1,600	116	155	1,800	130	175

BODY ELECTRICAL SYSTEM

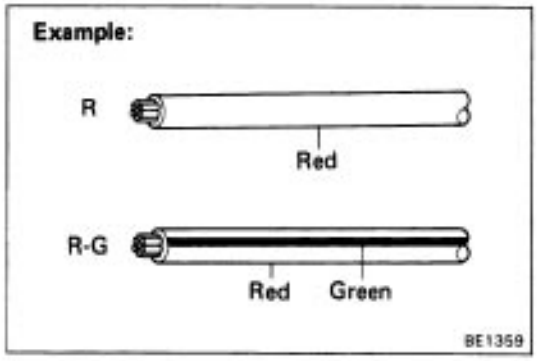

GENERAL INFORMATION

WIRING COLOR CODE

Wire colors are indicated by an alphabetical code.

B = Black	L = Blue	R = Red
BR = Brown	LG = Light Green	V = Violet
G = Green	0 = Orange	W = White
GR = Gray	P = Pink	Y = Yellow

The first letter indicates the basic wire color and the second letter indicates the color of the stripe.

CONNECTOR

1. PIN NUMBER OF FEMALE CONNECTOR

Numbered in order from upper left to lower right.

2. PIN NUMBER OF MALE CONNECTOR

Numbered in order from upper right to lower left.

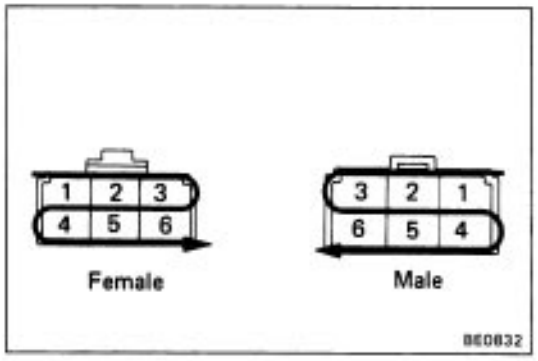

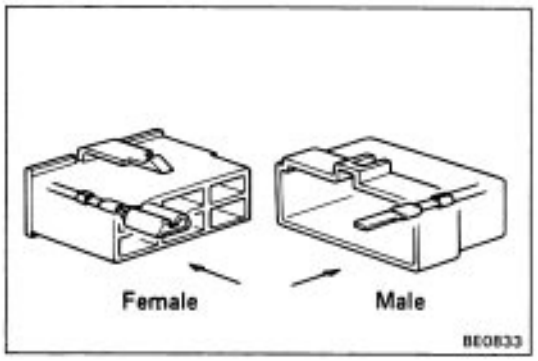

3. DISTINCTION OF MALE AND FEMALE CONNECTORS

Male and female connectors are distinguished by shape of their internal pins.

(a) All connectors are shown from the open end, and the lock is on top.

(b) To pull apart the connectors, pull on the connector itself, not the wires.

HINT: Check to see what kind of connector you are disconnecting before pulling apart.

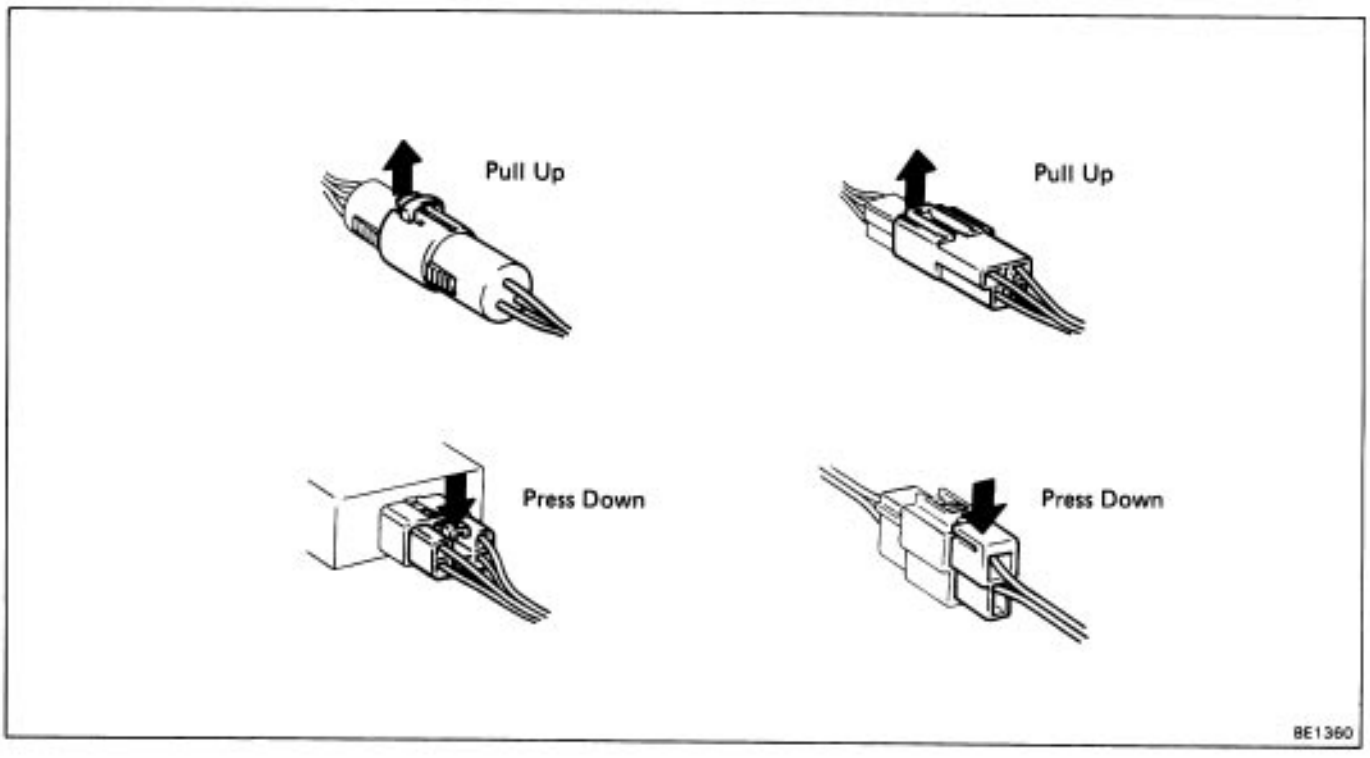

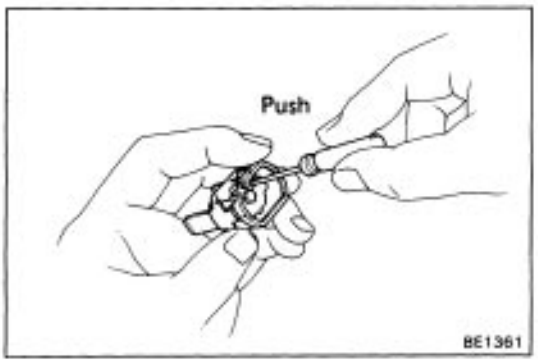

RESET CIRCUIT BREAKER

1. REMOVE CIRCUIT BREAKER

(a) Disconnect the negative (–) cable from the battery.

(b) Remove the circuit breaker.

2. RESET CIRCUIT BREAKER

(a) Insert the needle into the reset hole and push it.

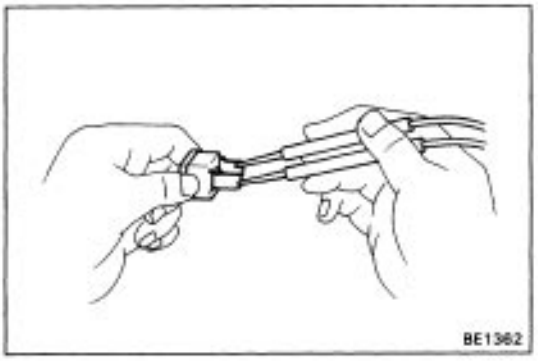

(b) Using an ohmmeter, check that there is continuity between both terminals of the circuit breaker.

If continuity is not as specified, replace the circuit breaker.

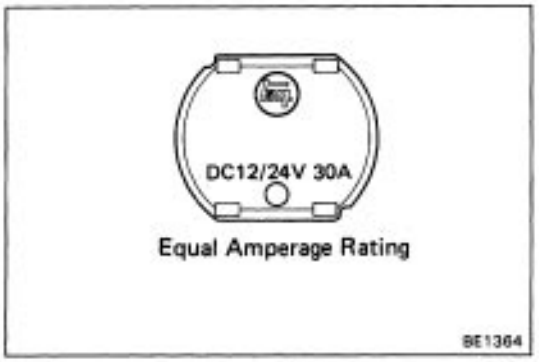

HINT: If replacing the circuit breaker, be sure to replace it with a breaker with an equal amperage rating.

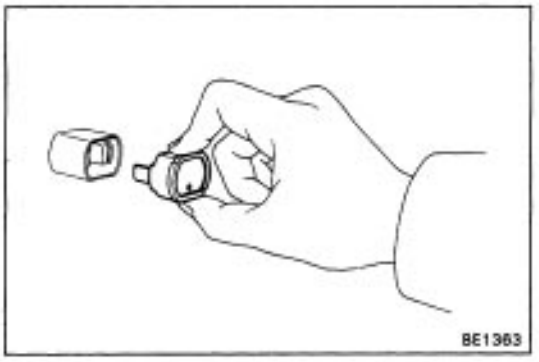

3. INSTALL CIRCUIT BREAKER

(a) Install the circuit breaker.

(b) Connect the negative (–) cable to the battery.

HINT: If a circuit breaker continues to cut out, a short circuit is indicated. Have the system checked by a qualified technician.

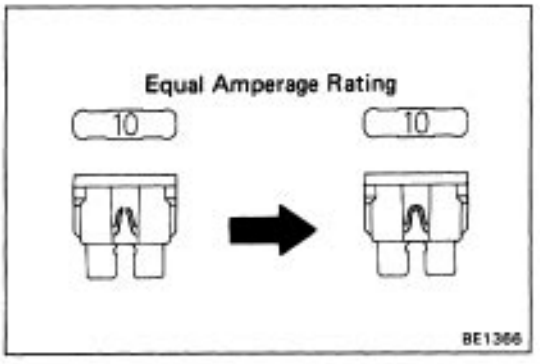

REPLACEMENT OF FUSE AND FUSIBLE LINK

HINT: If replacing the fuse or fusible link, be sure to replace it with a fuse or fusible link with an equal amperage rating.

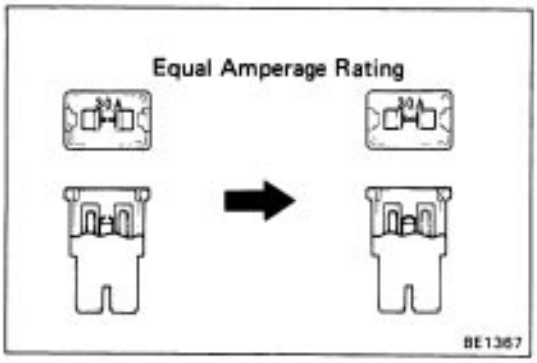

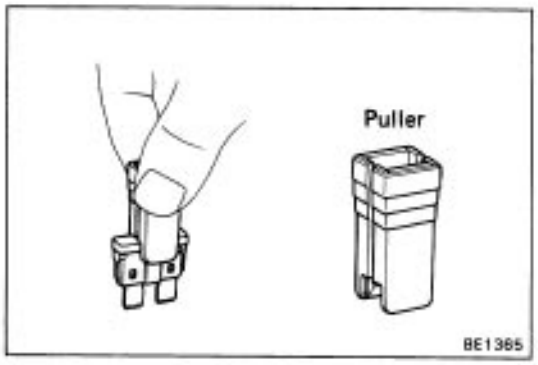

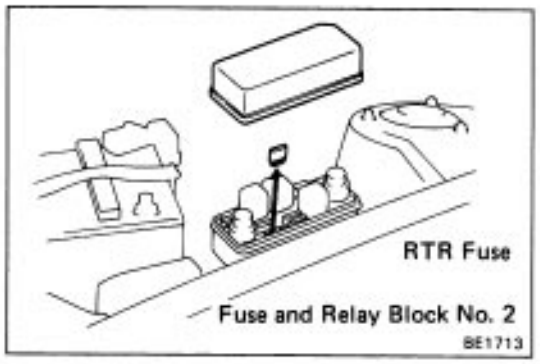

NOTICE:

1. **Turn off all electrical components and the ignition switch before replacing a fuse or fusible link. Do not exceed the fuse or fusible link amperage rating.**
2. **Always use a fuse puller for removing and inserting a fuse. Remove and insert straight in and out without twisting. Twisting could force open the terminals too much, resulting in a bad connection.**

If a fuse or fusible link continues to blow, a short circuit is indicated. The system must be checked by a qualified technician.

TAKE CARE WHEN INSPECTING HEADLIGHT CIRCUIT (Coupe)

CAUTION: With headlight switch OFF, disconnect the "RTR" (3O A) fuse before beginning work.

HOW TO INSPECT FOR SYSTEM INSPECTION

This inspection procedure is a simple troubleshooting which should be carried out on the vehicle during system operation and was prepared on the assumption of system component troubles (except for the wires and connectors, etc.).
Always inspect the trouble taking the following items into consideration.

- Ground point fault
- Open or short circuit of the wire harness
- Connector or terminal connection fault
- Fuse or fusible link fault

Precaution:

1. **This is an on–vehicle inspection during system operations. Therefore, inspect the trouble with due regard for security.**
2. **In cause of connecting the battery directly, be careful not to short circuit, and select the applicable voltage**.

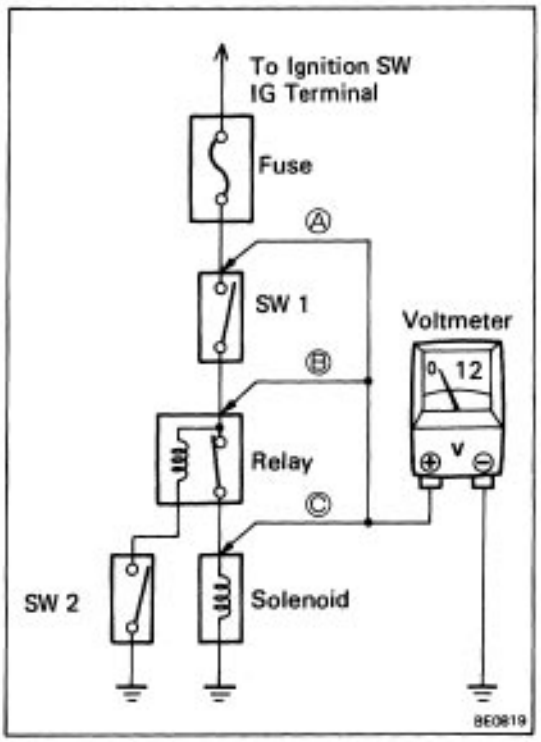

CHECK FOR VOLTAGE

(a) Establish conditions in which voltage is present at the check point.
Example:
(A)– Ignition SW on
(B)– Ignition SW and SW 1 on
(C)– Ignition SW, SW 1 and Relay on (SW 2 off)

(b) Using a voltmeter, connect the negative (–) lead to a good ground point or negative (–) battery terminal and the positive (+) lead to the connector or component terminal. This check can be done with a test bulb instead of a voltmeter.

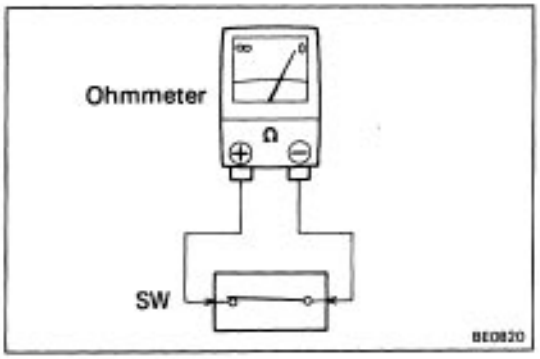

CHECK FOR CONTINUITY AND RESISTANCE

(a) Disconnect the battery terminal or wire so there is no voltage between the check points.

(b) Contact the two leads of an ohmmeter to each of the check points.

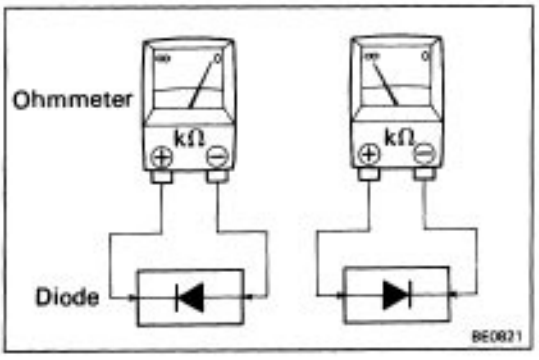

If the circuit has diodes, reverse the two leads and check again.
When contacting the negative (–) lead to the diode positive
(+) side and the positive (+) lead to the negative (–) side, there should be continuity.
When contacting the two leads in reverse, there should be no continuity.
HINT: Specifications may vary depending on the type of tester, so refer to the tester's instruction manual before performing the inspection.

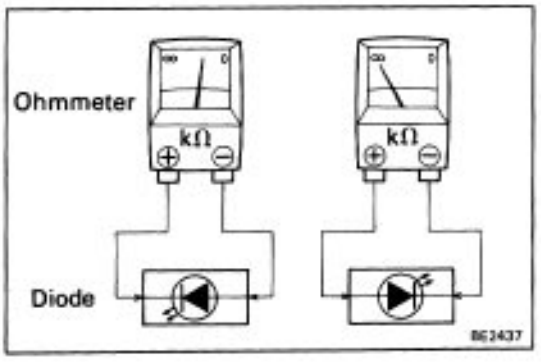

Check LED (Light Emitting Diode) in the same manner as that for diodes.
HINT:

- Use a tester with a power source of 3 V or greater to over–come the circuit resistance.
- If a suitable tester is not available, apply voltage and check that the LED lights up.

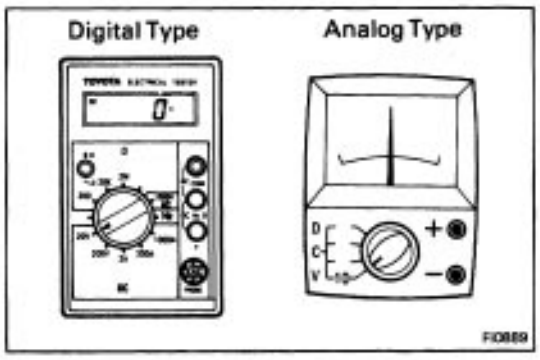

(c) Use a volt/ohmmeter with high impedance (10 k / V minimum) for troubleshooting of the electrical circuit.

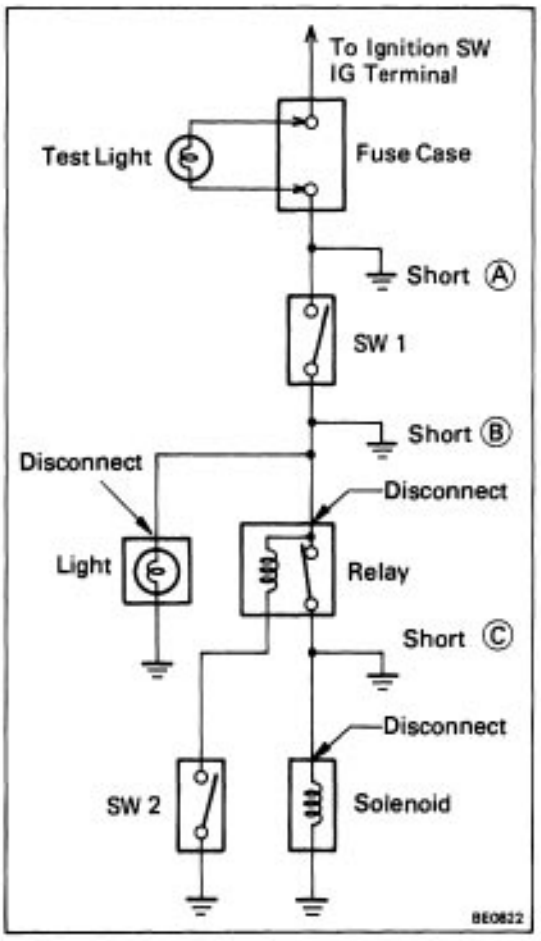

CHECK FOR SHORT CIRCUIT

(a) Remove the blown fuse and eliminate all loads from the fuse.
(b) Connect a test bulb in place of the fuse.
(e) Establish conditions in which the test bulb comes on.
Example:
Ⓐ A – Ignition SW on
Ⓑ B – Ignition SW and SW 1 on
Ⓒ C – Ignition SW, SW 1 and Relay on (Connect the Relay)
and SW 2 off (or Disconnect SW 2)
(d) Disconnect and reconnect the connectors while watching the test bulb. The short lies between the connector where the test bulb stays lit and the connector where the bulb goes out.
(e) Find the exact location of the short by lightly shaking the problem wire along the body.

LOCATION OF BODY ELECTRICAL PARTS

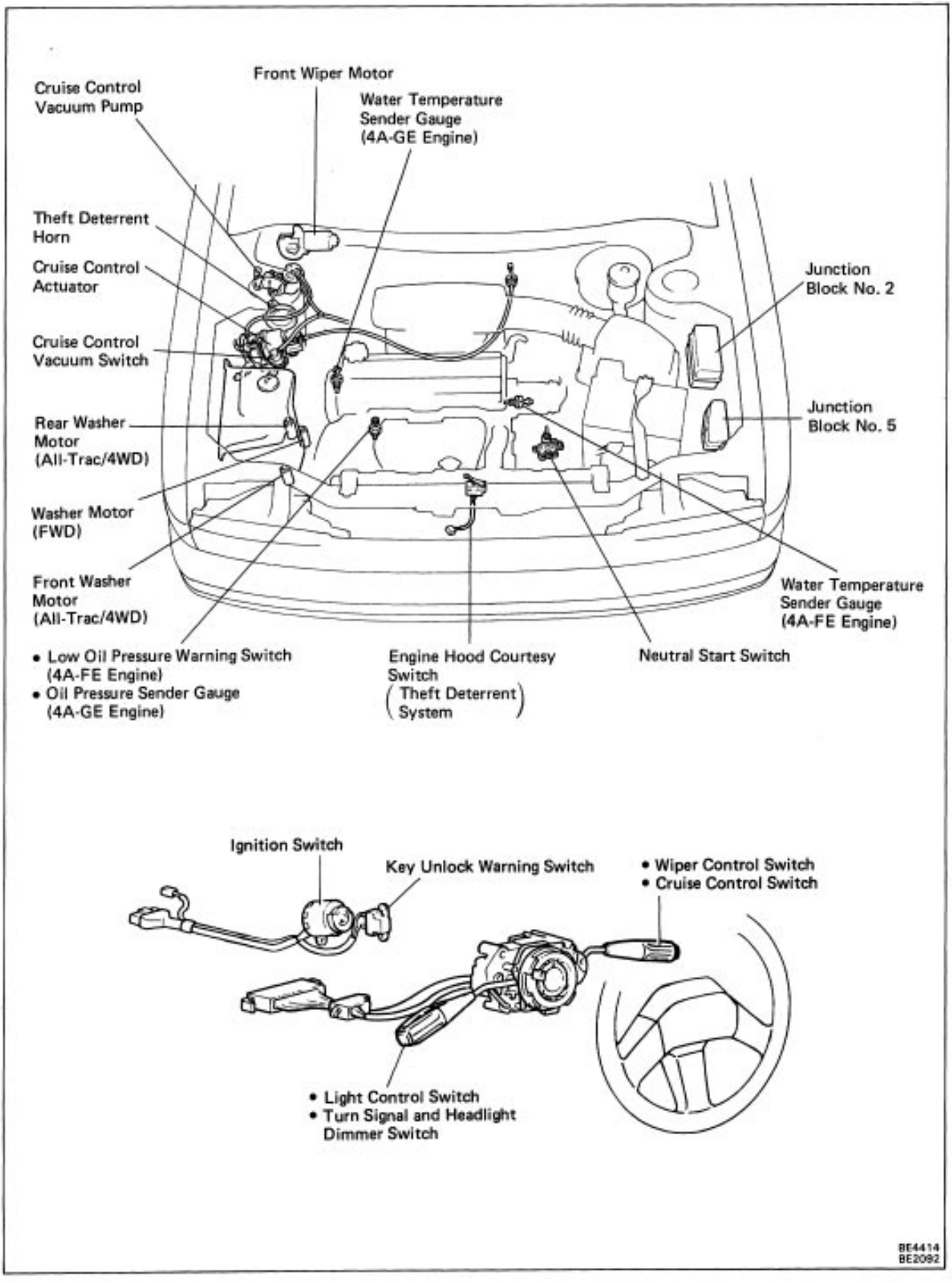

LOCATION OF BODY ELECTRICAL PARTS (Cont'd)

(Coupe)

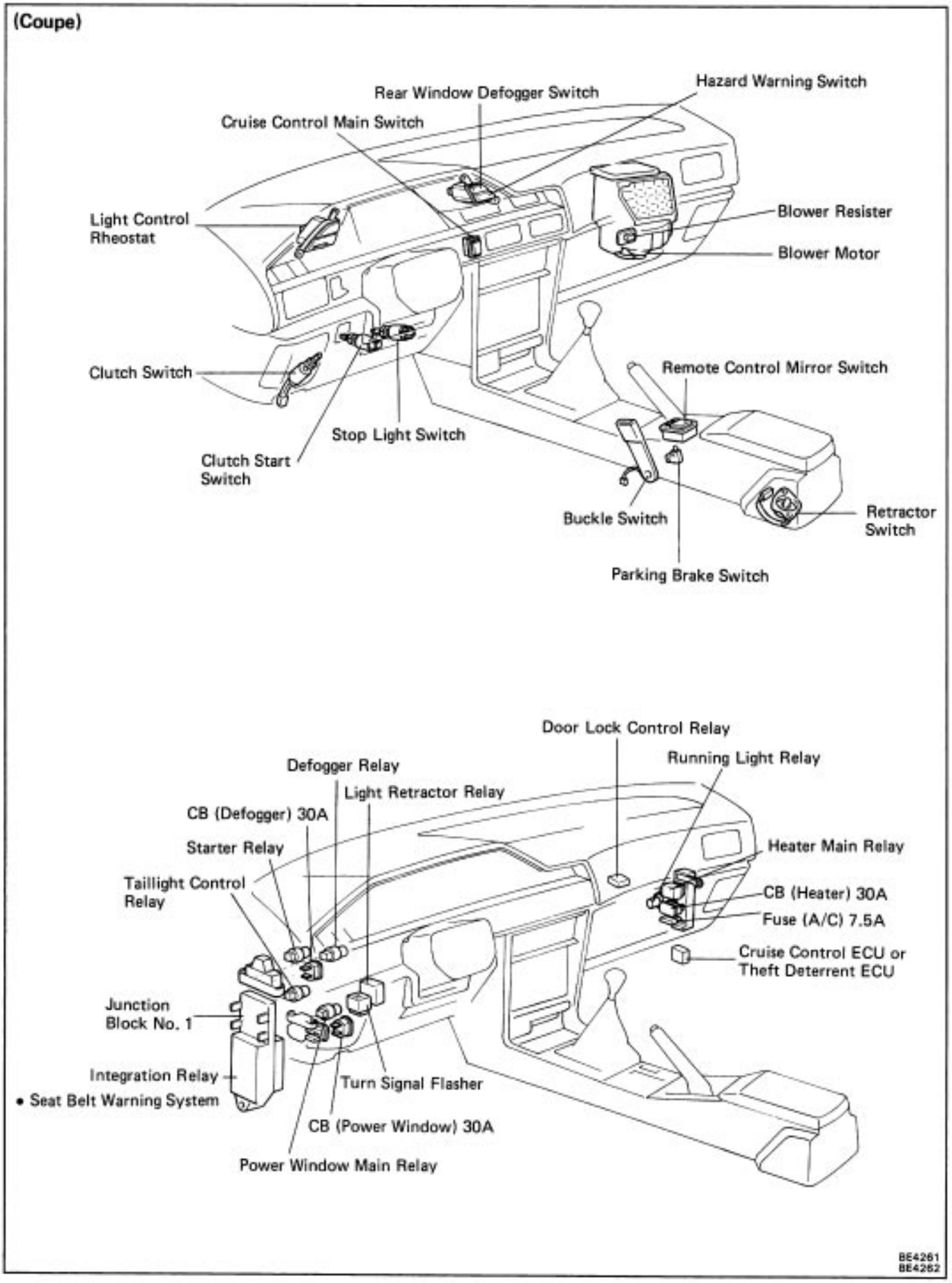

BE4261
BE4262

LOCATION OF BODY ELECTRICAL PARTS (Cont'd)

(Sedan & Wagon)

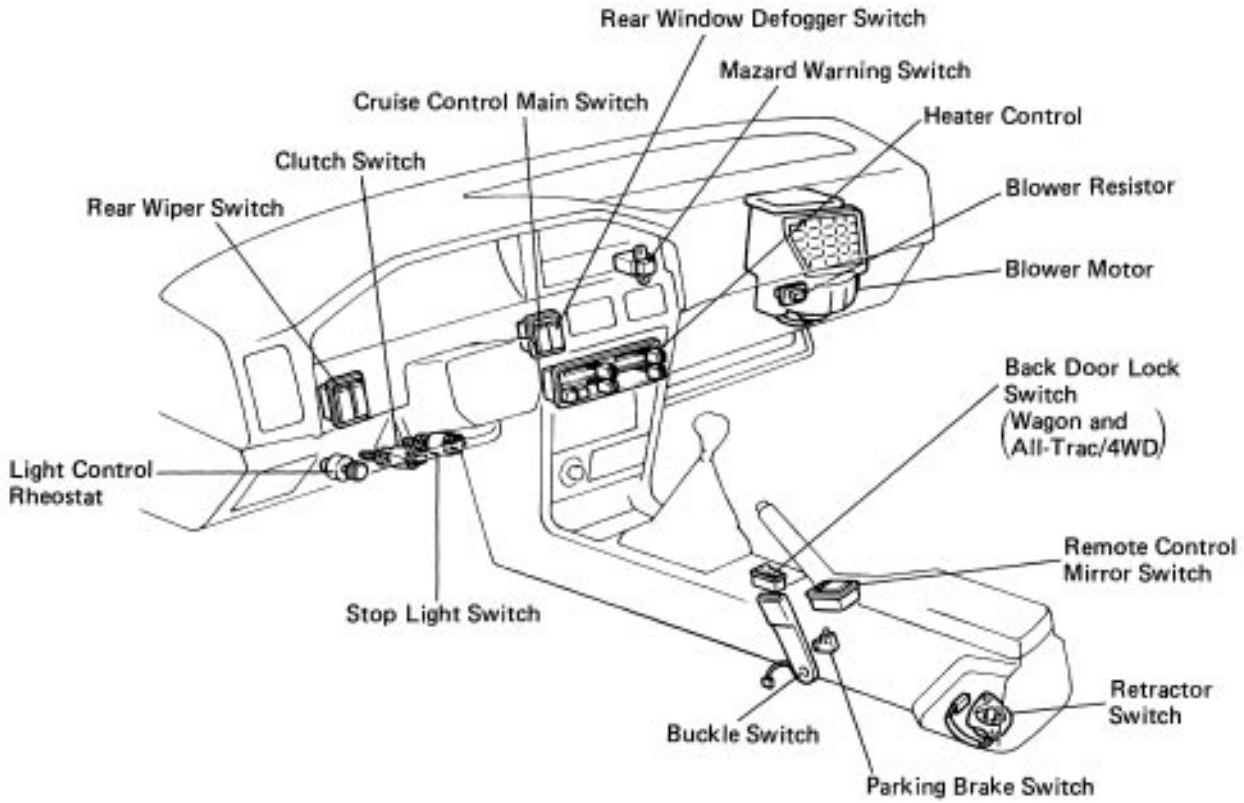

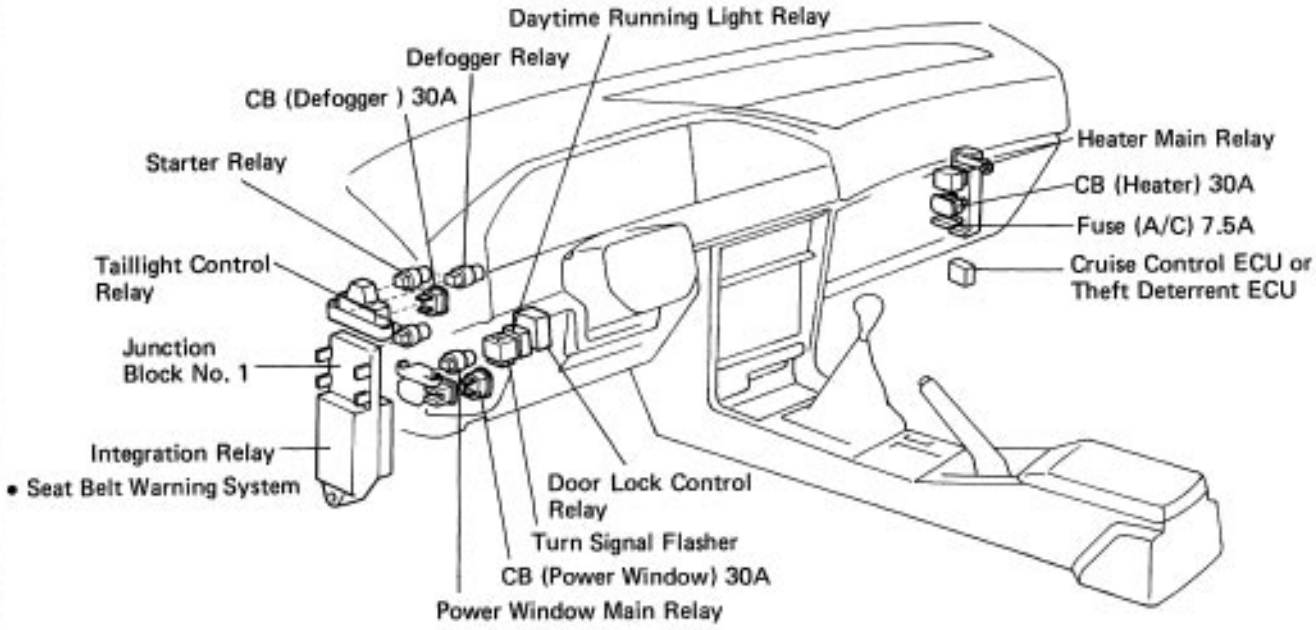

BE4263
BE4264

LOCATION OF BODY ELECTRICAL PARTS (Cont'd)

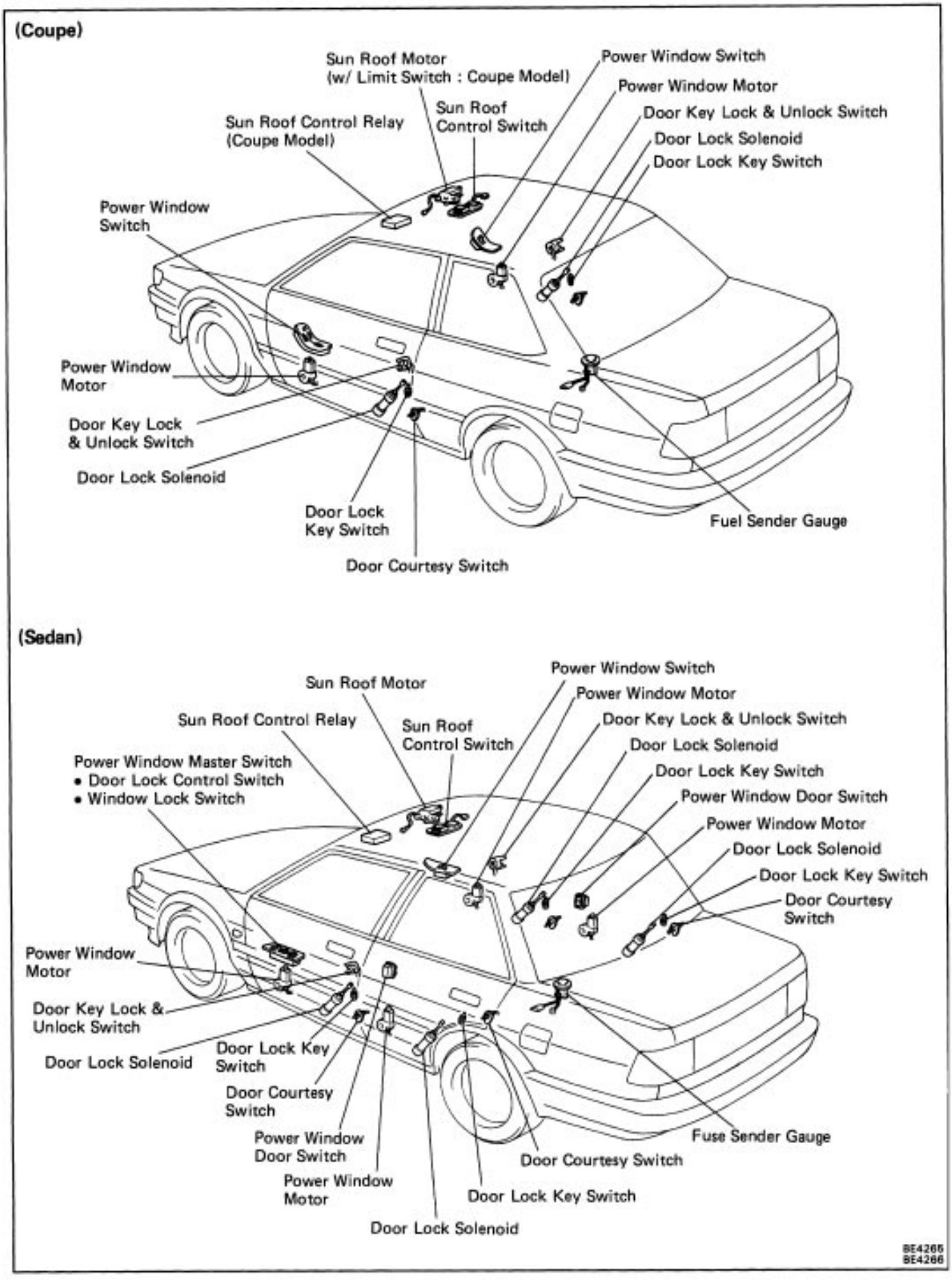

LOCATION OF BODY ELECTRICAL PARTS (Cont'd)

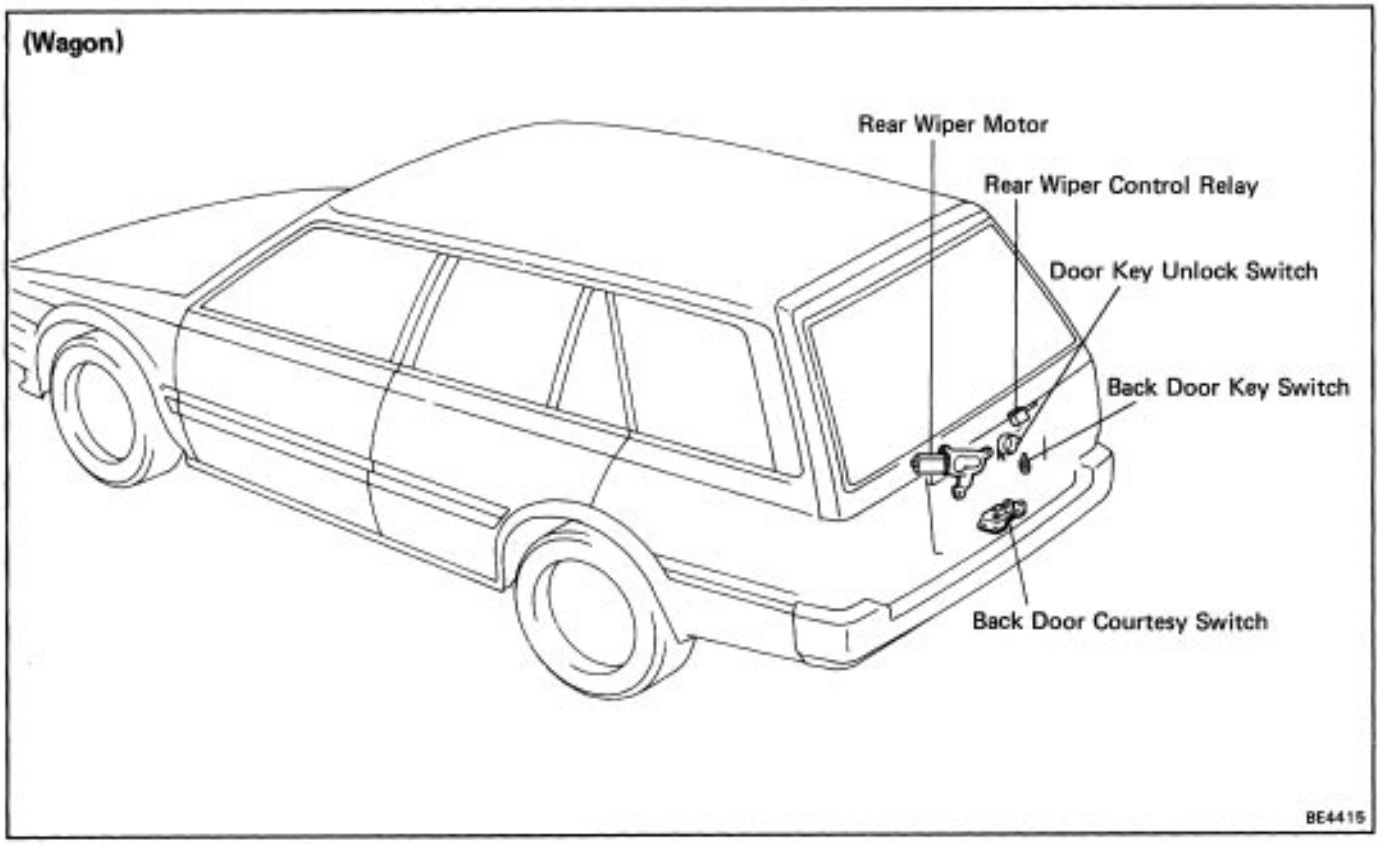

POWER SOURCE
Parts Location

Junction Block No. 1



Fuses

1.	STOP	15A
2.	ENGINE	7.5A
3.	IGN	10A
4.	GAUGE	7.5A
5.	RADIO	7.5A
6.	WIPER	20A
7.	TAIL	15A
8.	TURN	10A
9.	ECU-B	10A
10.	CIG	15A
11.	–	
12.	SUN ROOF	30A
13.	–	
14.	ECU-IG	15A
15.	–	

Relays and Circuit Breaker

A. Clutch Start Relay (M/T)
B. Defogger Relay
C. Circuit Breaker 30A
(w/ Power Window, Power Door Lock)

Junction Block No. 2

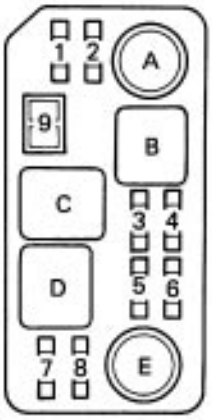

Fuses

1.	HEAD (LH)	10A
2.	HEAD (RH)	10A
3.	EFI	30A
		15A
4.	HAZ-HORN	15A
5.	DOME	10A
6.	RTR	30A (Coupe Model)
7.	CHARGE	7.5A
8.	FAN-I/UP	7.5A (w/ 4A-GE, 4A-FE Engine)
9.	FAN	30A

Relays

A. FAN No. 1
B. ENGINE MAIN
C. EFI
D. HEAD (Headlight Control Relay)
E. HORN

BE4267
BE1723

Parts Location (Cont'd)

Junction Block No. 5
(w/ A/C Type : USA, Coupe : CANADA)

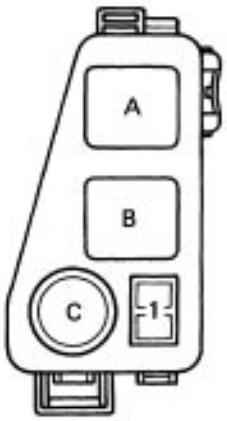

Fuse

1.	CDS FAN	30A

Relays

A. A/C Magnet Clutch
B. A/C FAN No. 2
C. A/C FAN No. 3

Junction Block No. 5
(w/ A/C Type : CANADA, w/o Coupe)

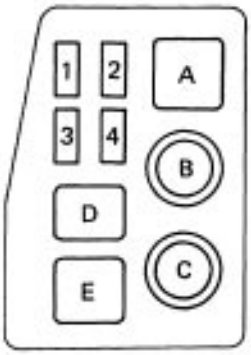

Fuses

1.	HEAD (LH-LWR)	10A
2.	HEAD (RH-LWR)	10A
3.	HEAD (LH-UPR)	10A
4.	HEAD (RH-UPR)	10A
D.	CDS	30A

Relays

A. Dimmer Relay
B. A/C Magnet Clutch
C. A/C FAN No. 3
E. A/C FAN No. 2

BE1725
BE4268

Wiring Diagram

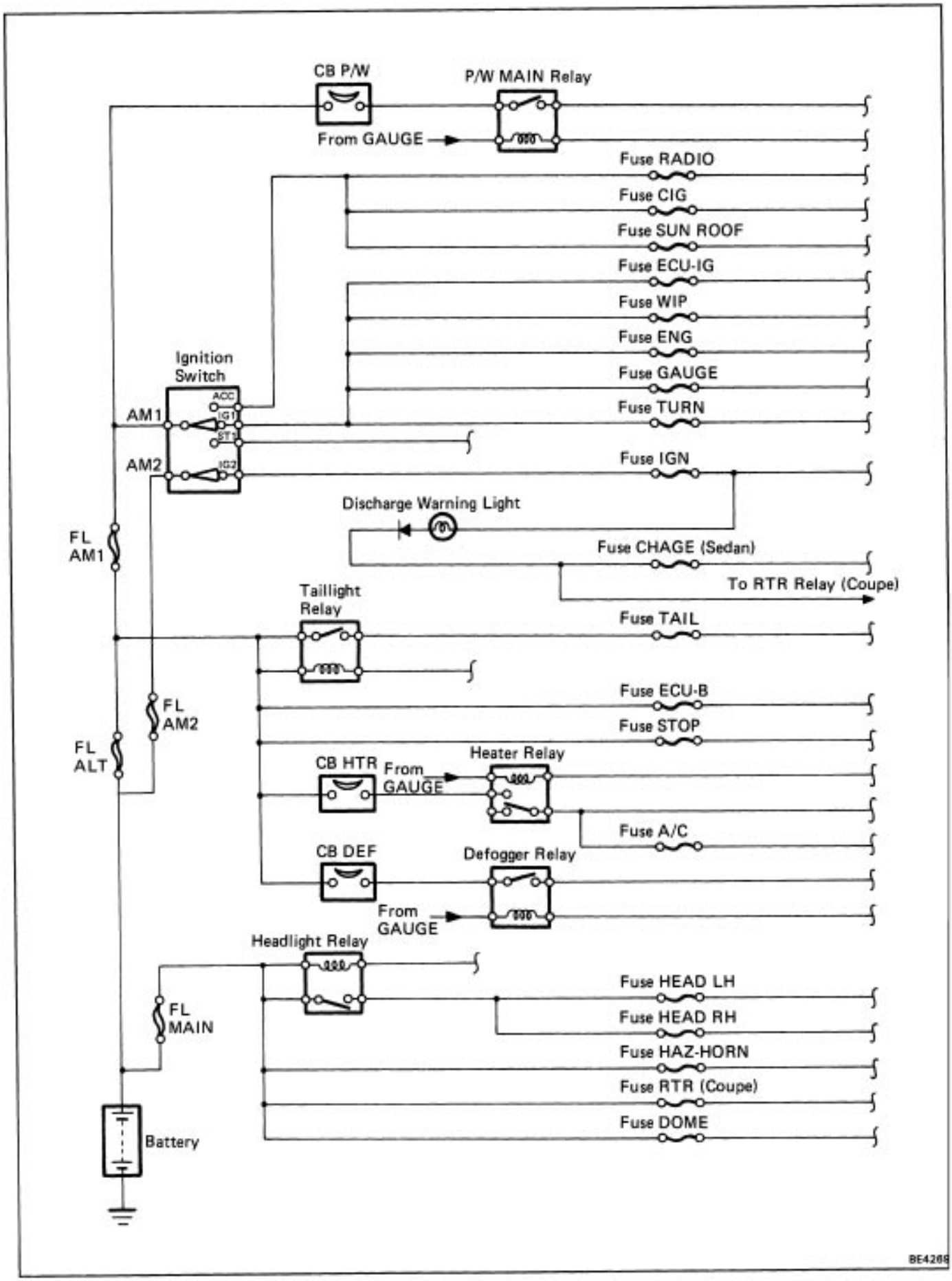

IGNITION SWITCH
Parts Inspection

INSPECT SWITCHES
(Ignition Switch/Continuity)

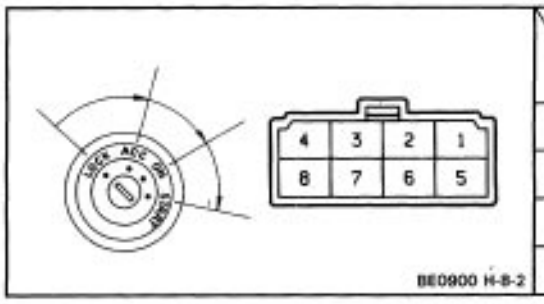

Switch position \ Terminal	1	2	3	4	5	7	8
LOCK							
ACC			○—○				
ON		○—○	○—○			○—○	
START	○—○	○—○		○—○	○—○	○—○	

If continuity is not as specified, replace the switch.

(Key Unlock Warning Switch/Continuity)

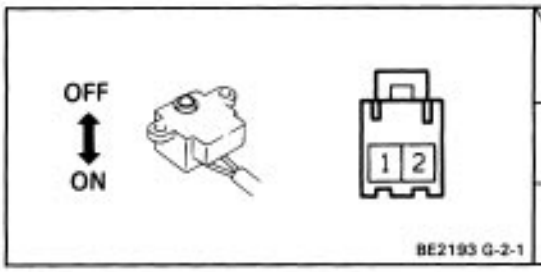

Switch position \ Terminal	1	2
OFF (Ignition key removed)		
ON (Ignition key set)	○—○	

If continuity is not as specified, replace the switch.

LIGHTING SYSTEM
Troubleshooting

Problem	Possible cause	Remedy	Page
Only one light lights up	Light bulb burned out Socket, wire or ground faulty	Replace bulb Repair as necessary	
Headlights do not light up	Fusible link blown HEAD fuse blown Headlight control relay faulty Light control/dimmer switch faulty Wiring or ground faulty	Replace fusible link Replace fuse and check for short Check relay Check switch Repair as necessary	BE–3 BE–3 BE–26 BE–26
High beam headlights or headlight flashers do not operate	Light control/dimmer switch faulty Wiring faulty	Check switch Repair as necessary	BE–26
Tail, parking and license light do not light	TAIL fuse blown Fusible link blown Taillight control relay faulty Light control switch faulty Wiring or ground faulty	Replace fuse and check for short Replace fusible link Check relay Check switch Repair as necessary	BE–3 BE–3 BE–26 BE–26
Stop lights do not light	STOP fuse blown Stop light switch faulty Wiring or ground faulty	Replace fuse and check for short Adjust or replace switch Repair as necessary	BE–3
Stop lights stay on	Stop light switch faulty Wiring faulty	Adjust or replace switch Repair as necessary	
Turn signal does not flash on one side	Turn signal switch faulty Wiring or ground faulty	Check switch Repair as necessary	BE–26
Turn signals do not operate	TURN fuse blown Turn signal flasher faulty Turn signal switch faulty Wiring or ground faulty	Replace fuse and check for short Check flasher Check switch Repair as necessary	BE–3 BE–34 BE–26
Hazard warning lights do not operate	HAZ–HORN fuse blown Turn signal flasher faulty Hazard warning switch faulty Wiring or ground faulty	Replace fuse and check for short Check flasher Check switch Repair as necessary	BE–3 BE–34 BE–34

System Description

Light Retractable System (w/ Light Auto Turn Off System)

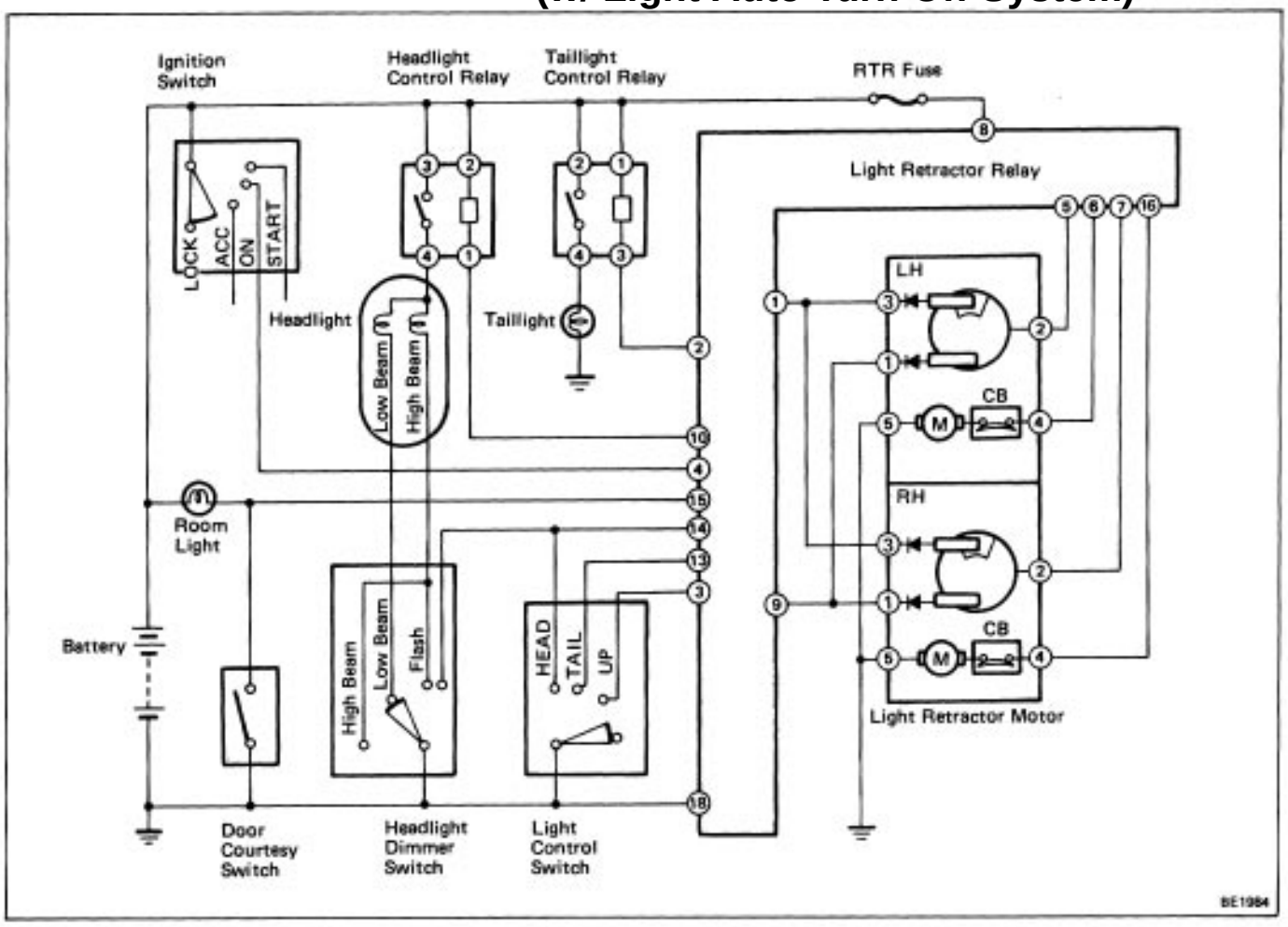

- Current flows from the battery to terminal 8 of the light retractor relay.
- Battery voltage is applied to terminals 5 and 7 of the light retractor relay.

Operation examples of the switch are shown below;
HINT: The numbers in ( ) are for the left side headlight.

1. LIGHT CONTROL SWITCH IN "TAIL"

When the switch is set, continuity is produced between terminal 13 of the light retractor relay (hereafter called LRR) and the body ground. Also, because continuity is produced between terminal 2 of the LRR and the body ground, the taillight control relay (hereafter called TCR) is turned on. Then the taillights light up.

2. LIGHT CONTROL SWITCH IN "HEAD"

When the switch is set, continuity is produced between terminal 13 of the LRR and the body ground, and 14 of the LRR and the body ground of the LRR.

- Also continuity is produced between terminals 9 and 18 of the LRR. Then the LRR operates to lead current from terminal 8 → terminal 16 (6) of the LRR → terminal 4 of the light retractor motor → terminal 5 of the motor → the body ground, and the motor starts to run in order to raise the headlights. When the headlights rise, the limit switch operates, so that continuity is broken between terminals 2 and 1 of the motor, and current is produced between terminals 2 and 3. As a result, because the LRR is interrupted, the headlights stay in position.

- Also, because continuity is produced between terminal 2 of the LRR and the body ground, and 10 of the LRR and the body ground, the TCR and the headlight control relay (hereafter called HCR) are turned on.
  Then the taillights and the headlights light up.

3. LIGHT CONTROL SWITCH CHANGED FROM "HEAD" TO "TAIL"

When the switch is set, continuity is broken between terminal 14 of the LRR and the body ground, and continuity is produced between terminal 3 of the LRR and body ground.

- As a result, the headlights are kept in position.
- By breaking continuity between terminal 14 of the LRR and the body ground, continuity is broken between terminal 10 and the body ground.
  Then the headlights go out.

4. LIGHT CONTROL SWITCH CHANGED FROM "TAIL" TO "UP"

When the switch is set, continuity is broken between terminal 13 of the LRR and the body ground.
Also, because continuity is broken between terminal 2 of the LRR and the body ground, the TCR is turned off.
Then the taillights go out.
The headlights are kept in position, because continuity is kept between terminal 3 of the LRR and the body ground.

5. LIGHT CONTROL SWITCH CHANGED FROM "UP" TO "OFF"

When the switch is set, continuity is broken between terminal 3 of the LRR and the body ground, so that continuity is produced between terminals 1 and 18 of the LRR.
Then the LRR operates so that the current flows from terminal 8 → terminal 16 (6) of the LRR → terminal 4 of the light retractor motor → terminal 5 of the motor → the body ground, and the motor starts to run in order to retract the headlights.
When the headlights are retracted, the limit switch operates, so that continuity is broken between terminals 2 and 3 of the motor, and continuity is produced between terminals 2 and 1.
As a result, because the LRR is interrupted, the headlights stay in position.

6. IGNITION SWITCH TURNED FROM "ON" TO "ACC" OR "LOCK" AND DRIVER'S DOOR OPEN WITH LIGHT CONTROL SWITCH IN "HEAD" (Light Auto Turn Off System)

When the switches are set, current does not flow from the battery to terminal 4 of the LRR, and continuity is produced between terminal 15 of the LRR and the body ground. Also, because continuity is broken between terminal 2 of the LRR and the body ground, and 10 of the LRR and the body ground, the TCR and the HCR are turned off.
Then the taillights and the headlights go out.
Also with the light control switch in "TAIL", the taillights go out.
When the ignition switch is turned on again, the taillights and headlights light normally.

(w/o Light Auto Turn Off System)

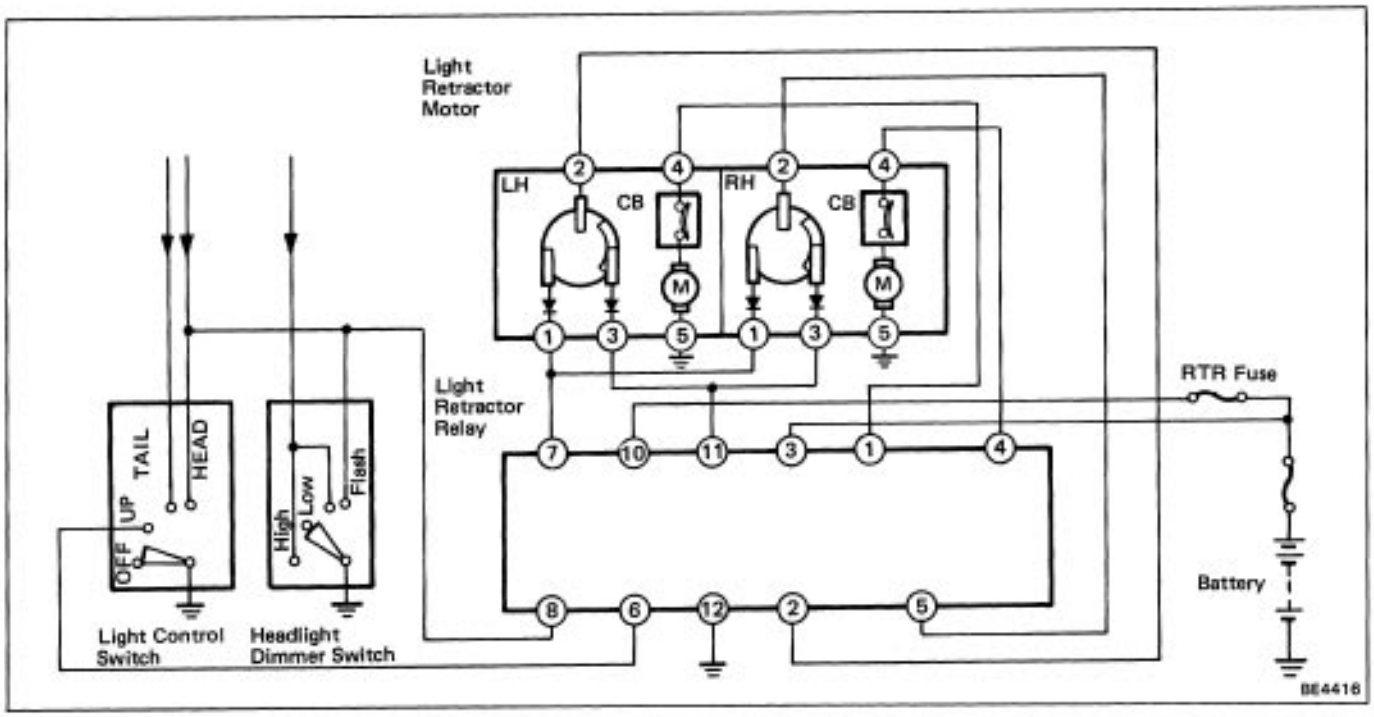

Current flows from the battery to terminals 3 and 10 of the light retractor relay.
Operation examples of the switch are shown below;
HINT: The numbers in ( ) are for the left side headlight.

1. LIGHT CONTROL SWITCH IN "HEAD"

When the switch is set, continuity is produced between terminal 8 of the light retractor relay (hereafter called LRR) and the body ground. Also continuity is made between terminals 7 and 12 of the LRR.
Then the LRR operates so that current flows from terminal 3 → terminal 4 (1) of the LRR → terminal 4 of the light retractor motor → terminal 5 of the motor → the body ground, and the motor starts to run in order to raise the headlights.
When the headlights rise, the limit switch operates, so that continuity is broken between terminals 2 and 1 of the motor, and continuity is produced between terminals 2 and 3.
As a result, because the LRR is interrupted, the headlights stay in position.

2. LIGHT CONTROL SWITCH CHANGED FROM "HEAD" TO "TAIL" OR "UP"

When the switch is set, continuity is broken between terminal 8 of the LRR and the body ground, and continuity is produced between terminal 6 of the LRR and the body ground.
As a result, the headlights are kept in position.

3. LIGHT CONTROL SWITCH CHANGED FROM "UP" TO "OFF"

When the switch is set, continuity is also broken between terminal 6 and the body ground.
Then continuity is produced between terminals 11 and 12 of the LRR, so that the LRR operates so that current flows from terminal 3 → terminal 4 (1) of the LRR → terminal 4 of the light retractor motor → terminal 5 of the motor → the body ground, and the motor starts to run in order to retract the headlights.
When the headlights are retracted, the limit switch operates, so that continuity is broken between terminals 2 and 3 of the motor, and continuity is produced terminals 2 and 1.
As a result, because the LRR interrupted, the headlights stay in position.

System Inspection

(See page BE–4 for How to Inspect)

1) First, select the applicable item in the Trouble column of the trouble chart, then look at the applicable codes in the **Check order** column.
2) Using the inspection chart, inspect the first item shown in the Check order column.
3)–1 If the inspection result is good, check the next item. If there are no further codes, advance to step (4).
3)–2 If the inspection result is no good, inspect the item in the Possible cause column in the inspection chart. After inspecting, check the system operation again. If the result is still no good, inspect the next item.
4) If all inspection items are good, inspect the applicable item in the Possible cause column in the trouble chart.

Light Retractable System

[Trouble Chart]

	Trouble	Check order	Possible cause
w/ Light auto turn off system only	Taillights do not light with light control switch in TAIL position.	A → B → C →	Terminal 4 circuit of taillight control relay faulty.
	Taillights do not go out with light control switch OFF.	A → D →	Connector or terminal 4 circuit of taillight control relay faulty.
	Headlights do not light with light control switch in HEAD position.	E → F → G →	Terminal 4 circuit of headlight control relay faulty.
	Headlights do not go out with light control switch OFF.	E → H →	Connector or terminal 4 circuit of headlight control relay faulty.
	Light auto turn off system does not operate.	Inspect light retractor relay. (See page BE–23)	Terminal 4, 13 or 14 circuit of light retractor relay faulty.
All models	Headlights do not rise with light control switch in HEAD position.	I → J → K → L →	Terminal 4 circuit of light retractor motor faulty.
	Headlights retract when light control switch changed from HEAD to TAIL or UP.	———	Terminal 3 circuit of light retractor motor faulty.
	Headlights do not retract with light control switch OFF.	I → J → L → M →	Terminal 4 circuit of light retractor motor faulty.

[Part Location and Connector Diagram]

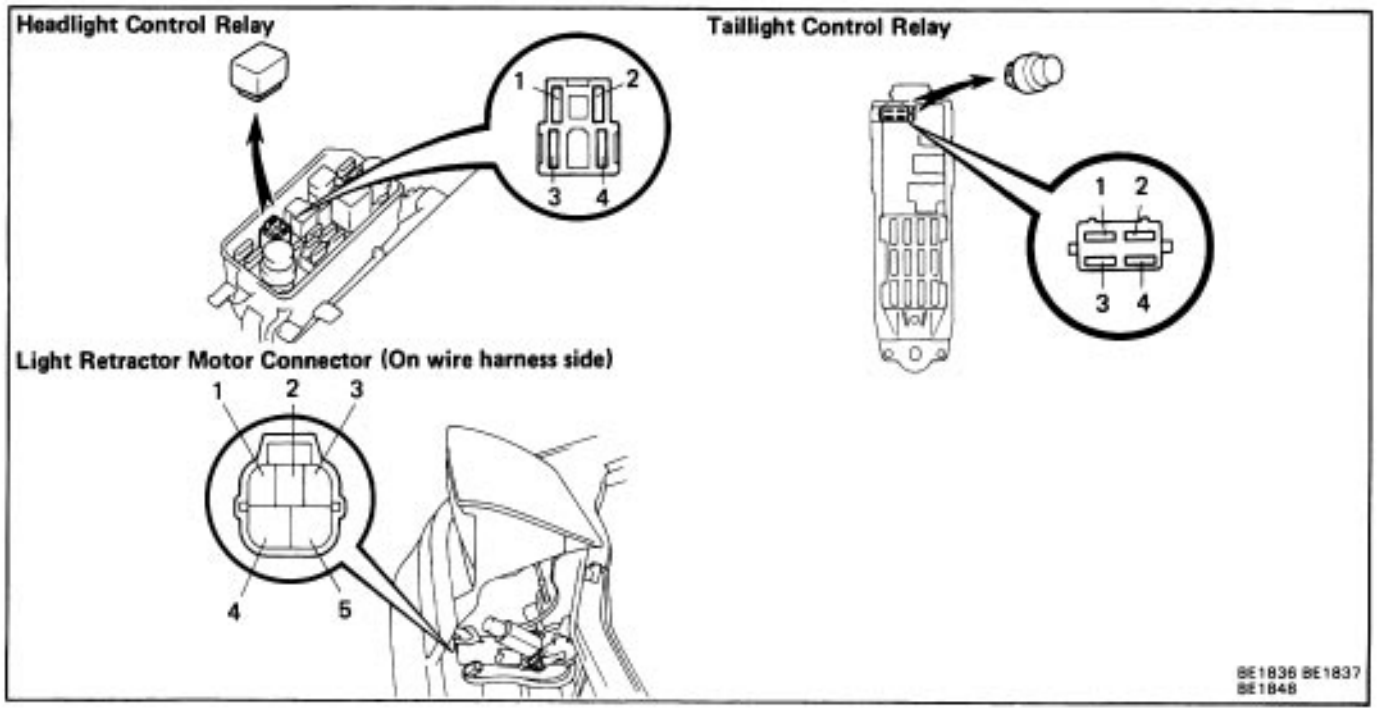

[Inspection Chart]

(Inspect the taillight control relay and the connector on the JIB side)

Code	Connection	Check condition	Specified value	Possible cause
A	———	Inspect taillight control relay (See page BE–26)	Good	Taillight control relay faulty
B	3 – Ground	Light control switch turned to TAIL	Continuity	Terminal 3 circuit faulty
C	1 – Ground 2 – Ground	———	Battery voltage	Power source circuit faulty
D	3 – Ground	Light control switch turned to OFF	No continuity	Terminal 3 circuit faulty

(Inspect the headlight control relay and the connector on the J/B side)

Code	Connection	Check condition	Specified value	Possible cause
E	———	Inspect headlight control relay (See page BE–26)	Good	Headlight control relay faulty
F	1 – Ground	Light control switch turned to HEAD	Continuity	Terminal 1 circuit faulty
G	2 – Ground 3 – Ground	———	Battery voltage	Power source circuit faulty
H	1 – Ground	Light control switch turned to OFF	No continuity	Terminal 1 circuit faulty

(Inspect the connector on the wire harness side)

Code	Connection	Check condition	Specified value	Possible cause
I	———	Inspect light retractor motor (See page BE–33)	Good	Light retractor motor faulty
J	5 – Ground	———	Continuity	Terminal 5 circuit faulty
K	1 – Ground	Light control switch turned to HEAD	Continuity	Terminal 1 circuit faulty
L	2 – Ground	———	Battery voltage	Terminal 2 circuit faulty
M	3 – Ground	Light control switch changed from HEAD to OFF	Continuity	Terminal 3 circuit faulty

Parts Adjustment

Adjustment of Light Aiming

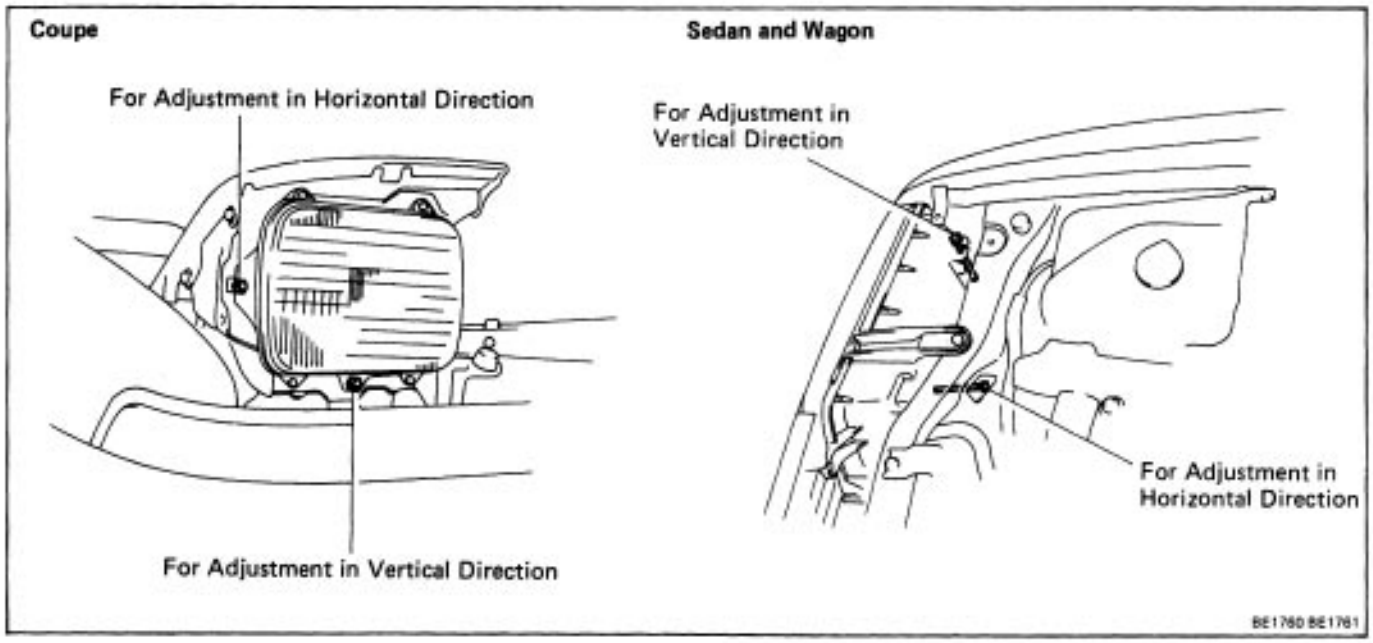

Taillight Engine Idle–Up System Inspection KA–GE Engine)

CHECK THAT ENGINE IDLE INCREASES

Turn the light control switch to ON, check that the engine revolutions increase.

Parts Replacement

Components

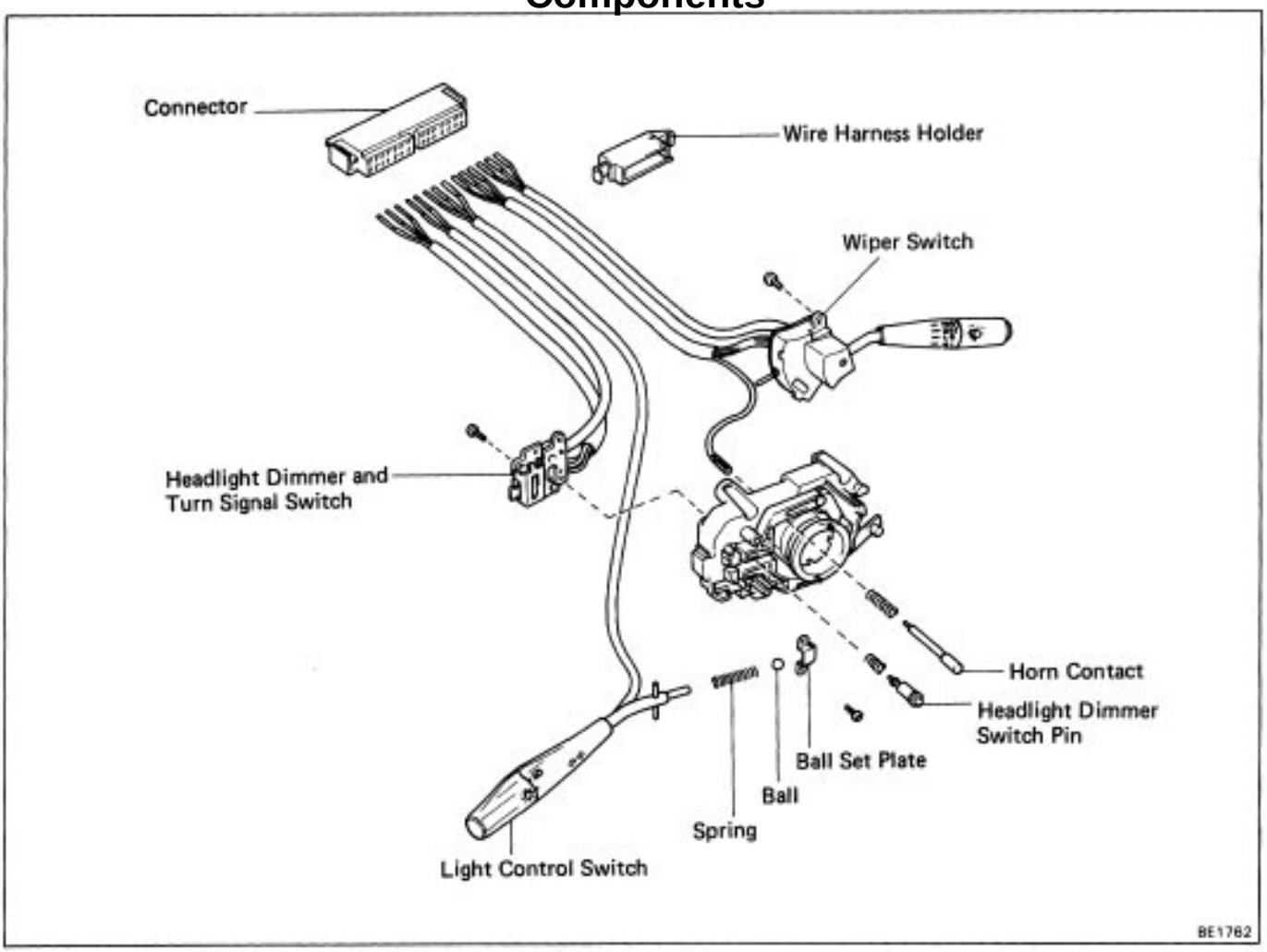

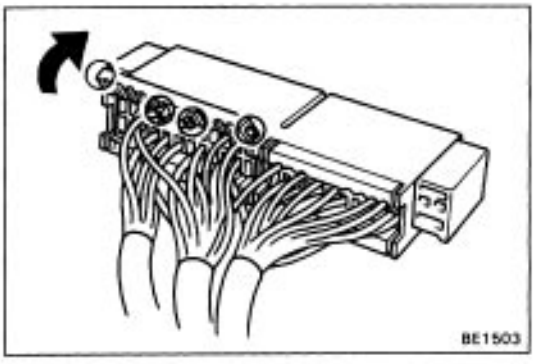

Disassembly of Combination Switch

1. REMOVE TERMINALS FROM CONNECTOR

(a) Release the four tabs and open the terminal cover.

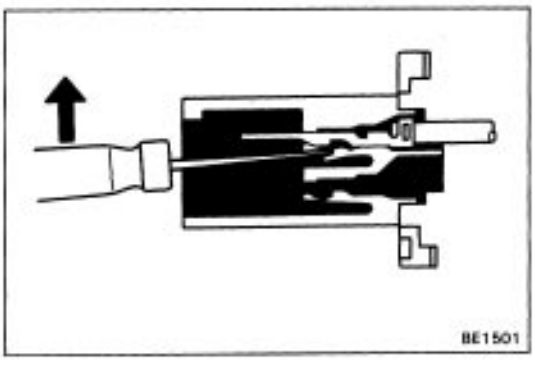

(b) From the open end, insert a miniature screwdriver between the locking lug and terminal.

(c) Pry down the locking lug with the screwdriver and pull the terminal out from the rear.

2. REMOVE LIGHT CONTROL SWITCH

(a) Remove the ball set plate and the ball.,

(b) Remove the light control switch with the spring.

3. REMOVE HEADLIGHT DIMMER AND TURN SIGNAL SWITCH

4. REMOVE WIPER SWITCH

5. INSTALL WIPER SWITCH

6. INSTALL HEADLIGHT DIMMER AND TURN SIGNAL SWITCH

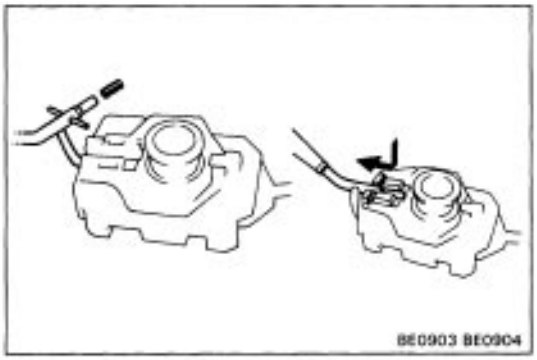

7. INSTALL LIGHT CONTROL SWITCH

(a) Insert the spring into the switch and install the switch to the body.

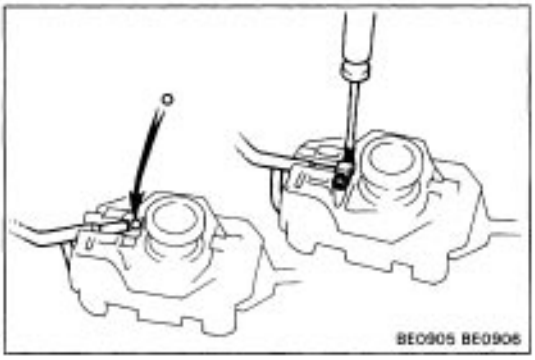

(b) Place the ball on the spring, position the switch at HIGH and install the ball set plate with the two screws.

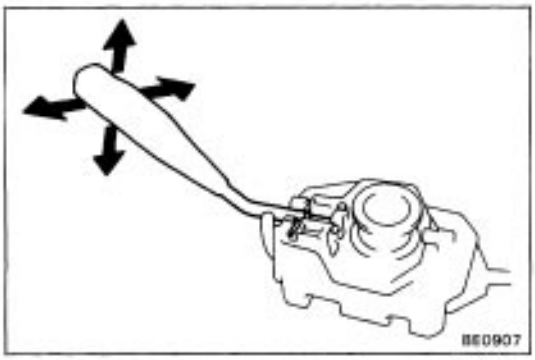

8. INSPECT SWITCH OPERATION

Insure that the switch operates smoothly.

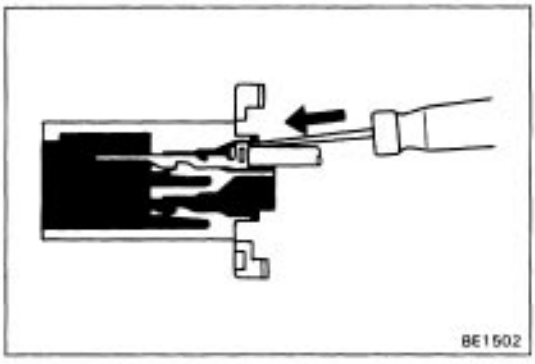

9. INSTALL TERMINALS TO CONNECTOR

(a) Push in the terminal until it is securely locked in the connector lug.

(b) Close the terminal cover.

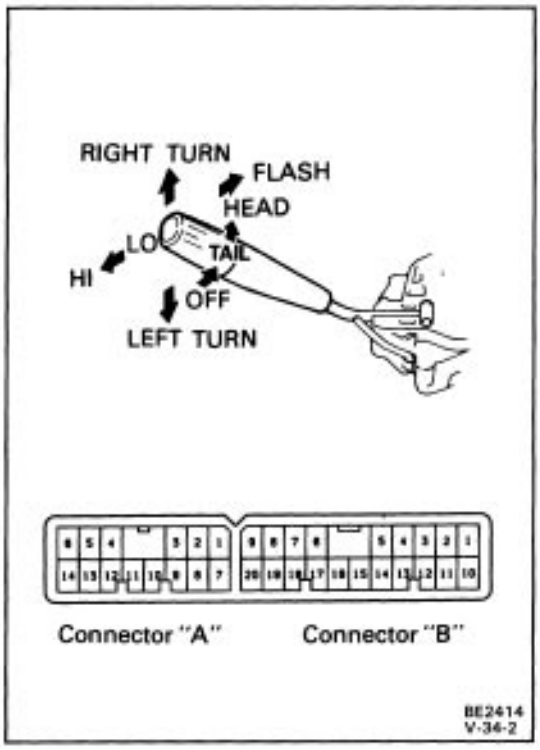

Parts Inspection

Headlight and Taillight System

1. INSPECT SWITCHES

(Light Control Switch/Continuity: Coupe)

Terminal (Color) / Switch position	B-20 (G)	A-2 (Clear)	A-11 (W)	A-13 (R)
OFF				
UP	○		○	
TAIL	○	○	○	
HEAD		○	○	○

(Sedan)

Terminal (Color) / Switch Position	A-2 (Clear)	A-11 (W)	A-13 (R)
OFF			
TAIL	○	○	
HEAD	○	○	○

If continuity is not as specified, replace the switch.

(Headlight Dimmer and Turn Signal Switch/Continuity)

Headlight Dimmer Switch

Terminal (Color) / Switch position	A-3 (R-G)	A-9 (W-B)	A-12 (R-Y)	A-14 (R-W)
Flash		○	○	○
Low beam	○	○		
High beam		○	○	

Turn Signal Switch

Terminal (Color) / Switch position	A-1 (G-W)	A-5 (G-B)	A-8 (G-Y)
Left turn	○	○	
Neutral			
Right turn	○		○

If continuity is not as specified, replace the switch.

2. INSPECT RELAYS

(Headlight Control Relay/Continuity)

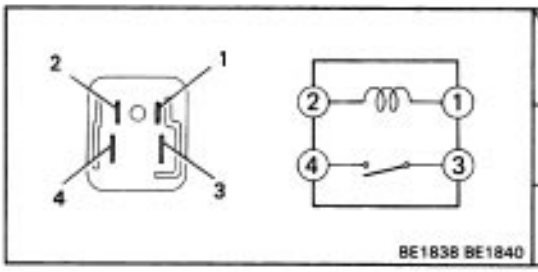

Terminal / Condition	1	2	3	4
Constant	○—∿∿—○			
Apply battery voltage to terminals 1 and 2			○—○	

(Headlight Control Relay/Continuity)

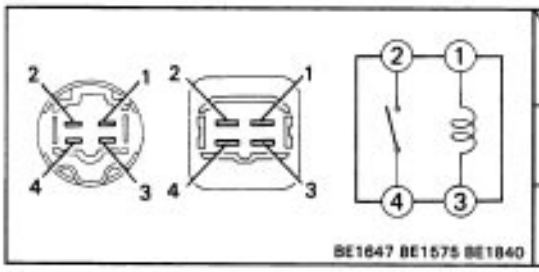

Terminal / Condition	1	2	3	4
Constant	○—∿∿—○	∿∿	○	
Apply battery voltage to terminals 1 and 3		○		○

(Headlight Control Relay/Continuity)

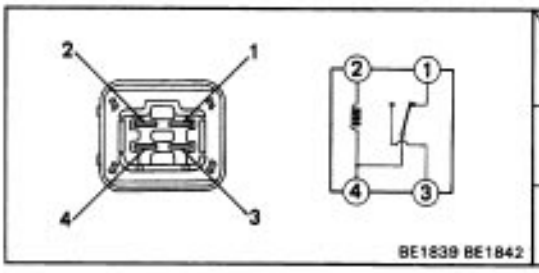

Terminal / Condition	1	2	3	4
Constant	○	○	∿∿	○
				○
Apply battery voltage to terminals 1 and 4			○	○

If continuity is not as specified, replace the relay.

System Description

Daytime Running Light System (CANADA models)

DESCRIPTION (Coupe)

The daytime running light system has lights for system only and taillights that go on automatically when the engine is started. This system is a standard equipment on all grade models for Canada. The running lights are controlled by the light retractor relay.

OPERATION

The daytime running light system is activated when the ignition switch is turned on and the engine is started. The lights are turned on and off, as shown below, depending on the condition on applicable switches.

(Lights do not go on when the ignition switch is merely turned on. Lights remain on when the running engine stalls.)

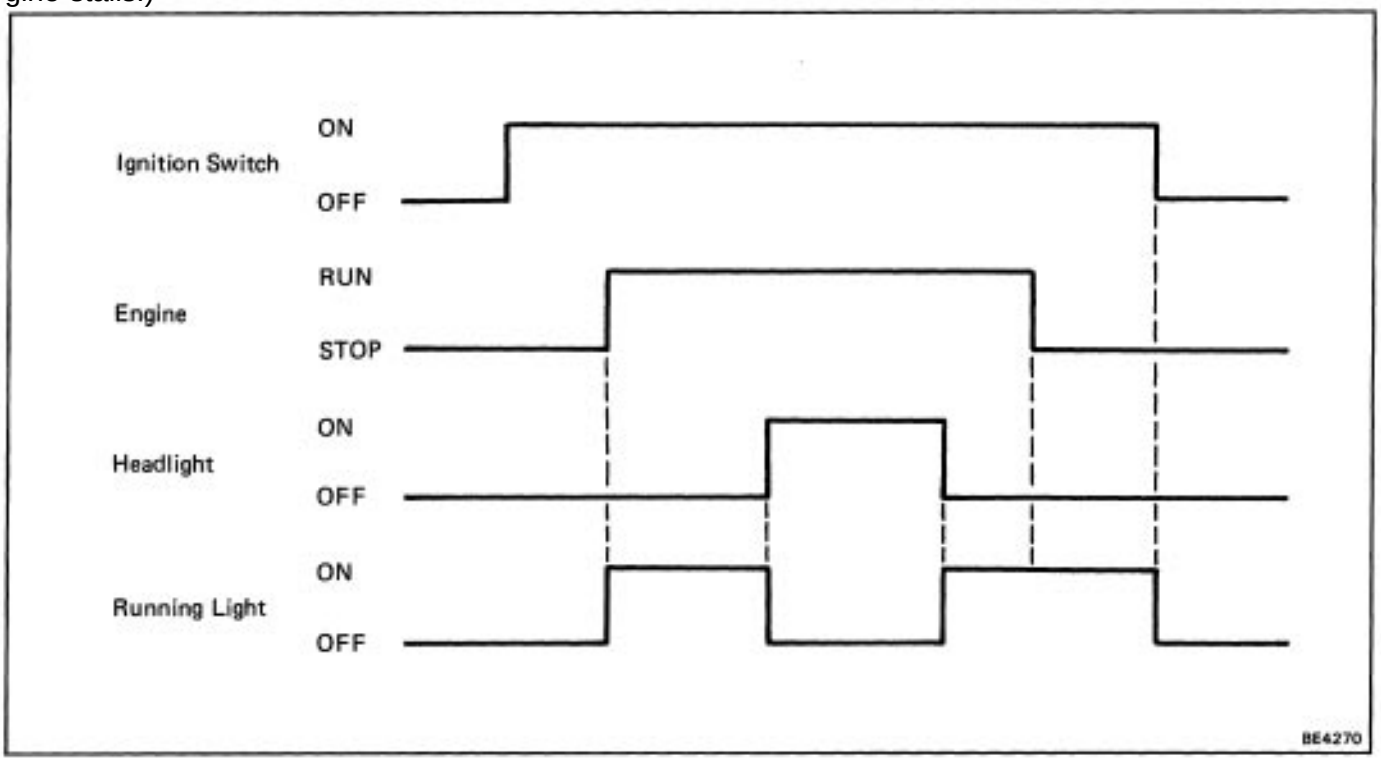

OPERATION

Operation examples of the switch are shown below.

(Coupe)

1. IGNITION SWITCH ”ON” AND LIGHT CONTROL SWITCH ”OFF”

When the switches are set, current is led from the battery to terminal *4/18(4/10), and terminal *4/6(9/19) of the light retractor relay. After engine running, because continuity is made between terminal *2/18(2/10) of the light retractor relay and the body ground, and terminal *2/I6(6/10) of the light retractor relay and the body ground of the light retractor relay, the taillight control relay and running light control relay are turned on, so the taillights and running lights will come on.

2. LIGHT CONTROL SWITCH ”HEAD”

When the switch is set, continuity is made between terminal * 14/18(8/12) of the light retractor relay and the body ground. Also, because the continuity between terminal *2/6(6/10) and terminal *18/18(12/12) of the light retractor relay is cut off, so the running lights will go off.

HINT: If the light control switch is turned to ”TAIL” or ”OFF”, because continuity is made between terminal *2/6(6/10) and the body ground of the light retractor relay, so the running lights will come on again.

3. ENGINE STOPS (IGNITION SWITCH ”ON”)

When the engine is stopped, because the continuity between terminal *2/6(6/10) and terminal * 18/180 2/12) of the light retractor relay remains, so the running lights also remain.

HINT: If ignition switch is turned to ”OFF”, because the continuity between terminal * 2/16(6/10) and terminal * 18/18 (2/12) of the light retractor relay is cut off, so running lights will go off.

If light control switch is in ”UP” or ”OFF”, because the continuity between terminal *2/18(2/10) and terminal *18/18 (12/12) of the light retractor relay is also cut off, so taillights will also go off.

(Sedan)

1. IGNITION SWITCH ”’ON” AND LIGHT CONTROL SWITCH ”OFF”

When the switches are set, current is led from the battery to terminal 1 of the running light relay. After engine running, because continuity is made between terminal 5 and the body ground, and terminal 3 and the body ground of the running light relay, the taillight control relay and headlight control relay are turned on, so the running lights will come on.

2. LIGHT CONTROL SWITCH ”HEAD”

When the switch is set, continuity is made between terminal 4 and the body ground, and terminal 2 and the body ground of the running light relay. Also, because the continuity is made between terminal 5 and the body ground, and terminal 3 and the body ground of the running light relay at all times, the taillights and headlights light up.

HINT: When the headlight dimmer switch is set to ”HEAD”, continuity is made between terminal 13 of the running light relay and the body ground. Also, because continuity is made between terminal 14 of the running light relay and the body ground, the headlight dimmer relay is turned on. Then the headlights go on at the high beam.

3. HEADLIGHT DIMMER SWITCH ”FLASH”

When the switch is set, continuity is made between terminal 6 and the body ground, and terminal 13 and the body ground of the running light relay. Also, because the continuity is made between terminal 5 and the body ground, and terminal 14 and the body ground of the running light relay, the headlights flash.

4. ENGINE STOPS (IGNITION SWITCH ”ON”)

When the engine is stopped, because the continuity between terminal 5 and terminal 10 of the running light relay remains, so the running lights also remain.

HINT: If ignition switch is turned to ”OFF”, because the continuity between terminal 5 and terminal 10 of the running light relay is cut off, so running lights will go off.

Wiring and Connector Diagram

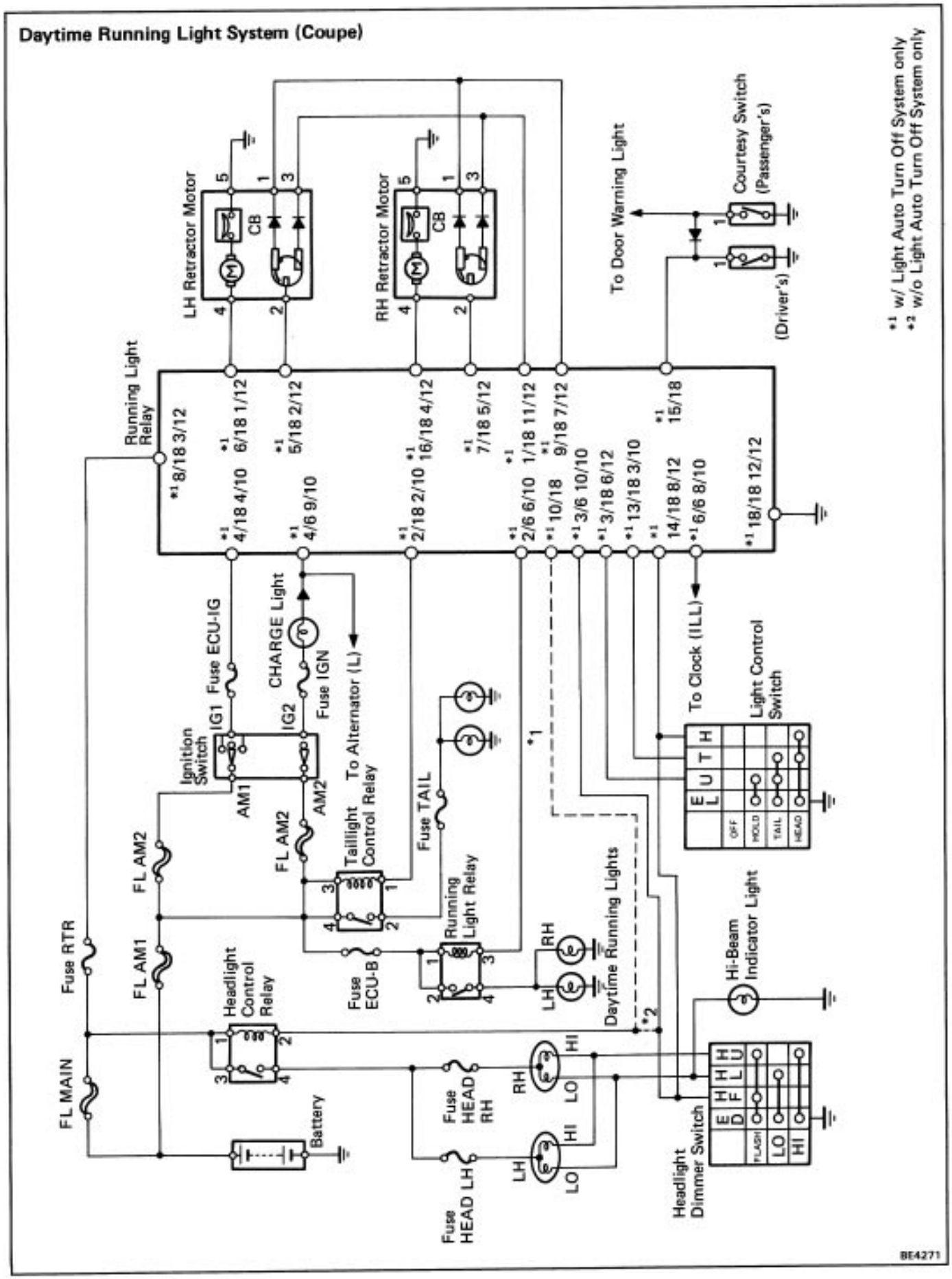

Wiring and Connector Diagram (Cont'd)

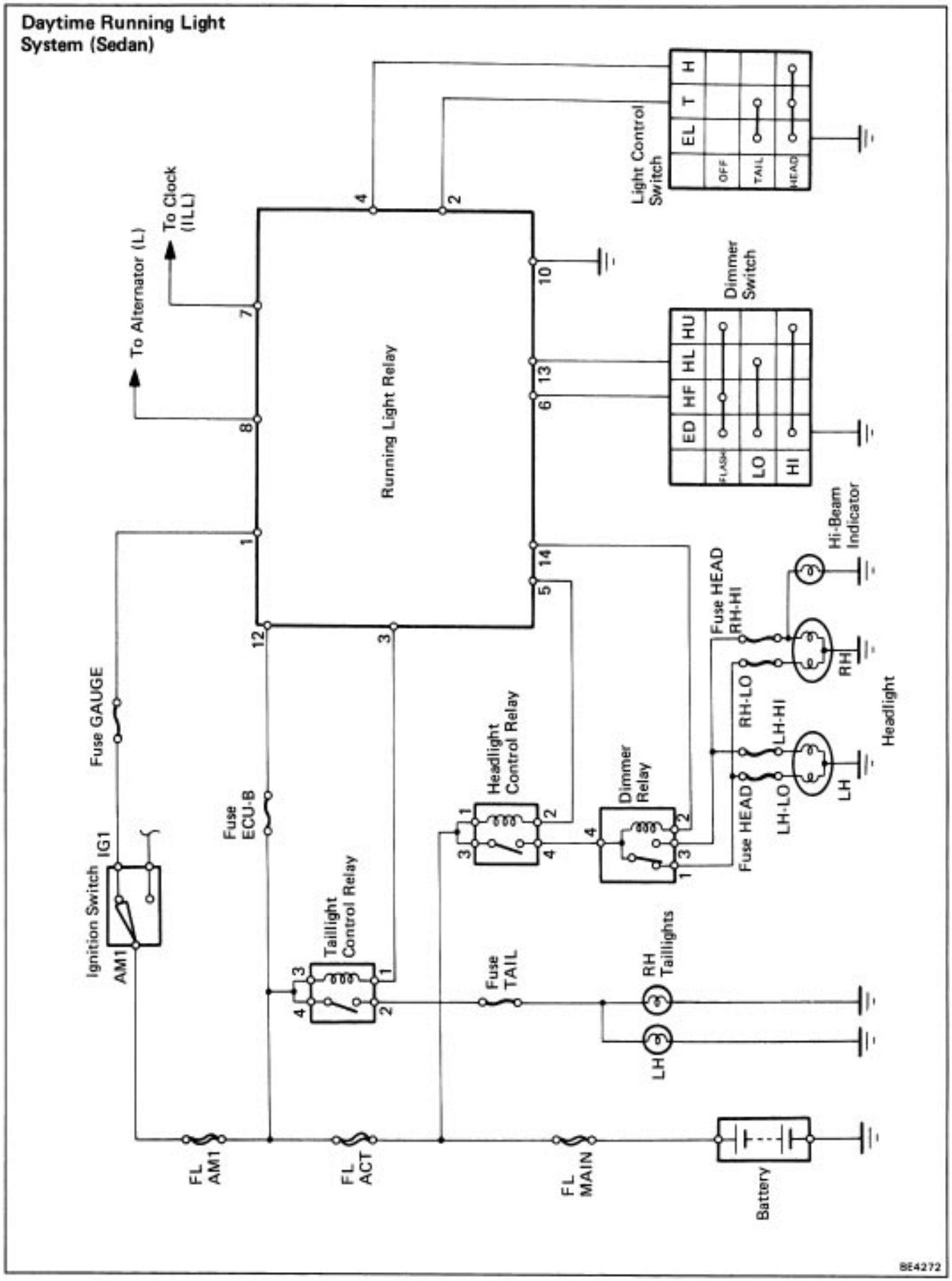

Wiring and Connector Diagram (Cont'd)

Ignition Switch

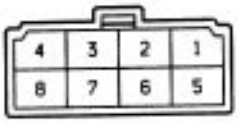

Light Control Switch and Headlight Dimmer Switch

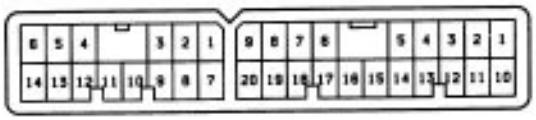

Headlight Control Relay

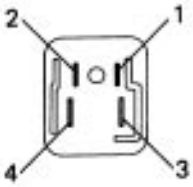

Taillight Control Relay

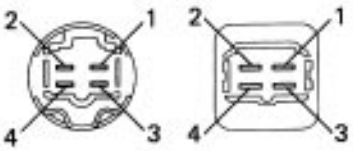

Courtesy Switch



Light Retractor Relay

(w/ Light Auto Turn Off System)

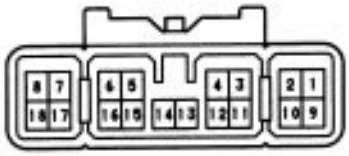



(CANADA models)

(w/o Light Auto Turn Off System)

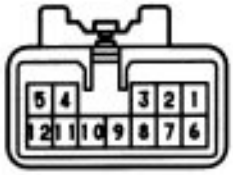



(CANADA models)

Daytime Running Light Relay

(Coupe)

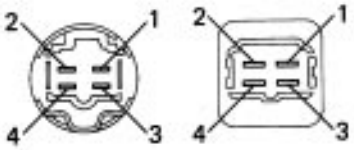

(Sedan)

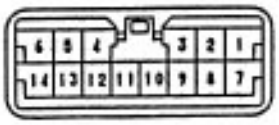

Headlight Dimmer Relay

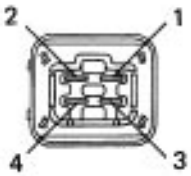

Light Retractable System

1. INSPECT LIGHT RETRACTOR RELAY

Disconnect the connector from the relay and inspect the connector on wire harness side as shown in the chart.

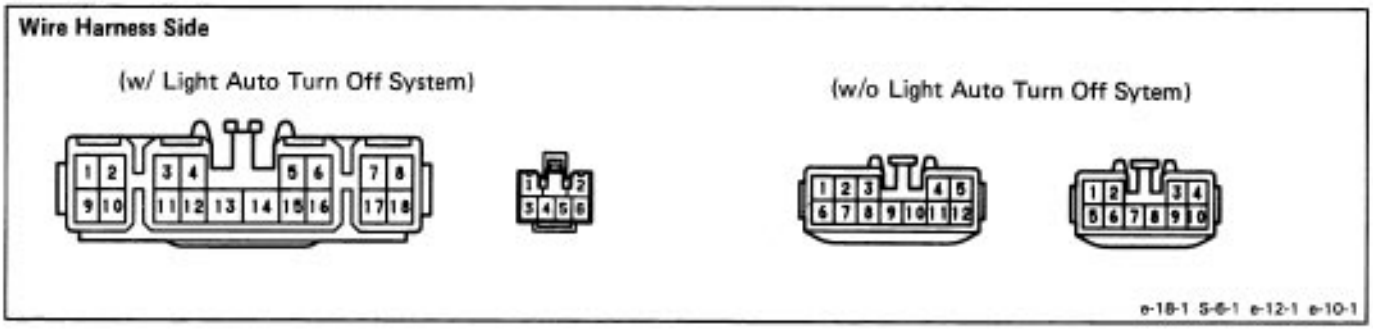

(w/ Light Auto Turn Off System)

Check for	Tester connection	Condition		Specified value
Continuity	3 – Ground	Light control switch position	OFF or HEAD	No continuity
			LIP or TAIL	Continuity
	*1 5 – 1 *1 7 – 1	Headlight position	Any position ex. lowermost	Continuity
			Lowermost	No continuity
	*1 5 – 9 *1 7 – 9	Headlight position	Any positions. uppermost	Continuity
			Uppermost	No continuity
	13 – Ground	Light control switch position	OFF or UP	No continuity
			TAIL or HEAD	Continuity
	14 – Ground	Light control switch position	OFF, UP or TAIL	No continuity
			HEAD	Continuity
		Headlight dimmer switch position (with light control switch at OFF)	Low beam or High beam	No continuity
			Flash	Continuity
	6 – Ground 16 – Ground	–		*2 Continuity
	18 – Ground	–		Continuity
	21 – Ground	Headlight dimmer switch position	Low	Continuity
			High or Flash	No Continuity
Voltage	2 – Ground	–		Battery voltage
	4 – Ground	Ignition switch position	Lock pr ACC	No voltage
				Battery voltage
	8 – Ground	–		Battery voltage
	10 – Ground	–		Battery voltage
	15 – Ground	Door position	Closed (Courtesy switch OFF)	Battery voltage
			Opened (Courtesy switch ON)	No voltage
	20 – Ground	–		Battery voltage
	22 – Ground	Engine condition (with IG ON)	Run	Battery voltage
			Stop	No voltage

HINT:
*1: Connect the test leads so that the current from the ohmmeter can flow according to the above orders.
*2: There is resistance because this circuit is grounded through the motor.

(w/o Light Auto Turn Off System)

Check for	Tester connection	Condition		Specified value
Continuity	1 – Ground 4 – Ground	–		*1Continuity
	*2 2 – 7 *2 5 – 7	Headlight position	Any position ex. uppermost	Continuity
			Uppermost	No continuity
	*2 2 – 11 *2 5 – 11	Headlight position	Any position ex. lowermost	Continuity
			Lowermost	No continuity
	6 – Ground	Light control switch position	OFF or HEAD	No continuity
			UP or TAIL	Continuity
	8 – Ground	Light control switch position	OFF, UP or TAIL	No continuity
			HEAD	Continuity
		Headlight dimmer switch position (with light control switch at OFF)	Low beam or High beam	No continuity
			Flash	Continuity
	12 – Ground	–		Continuity
	15 – Ground	Light control switch position	OFF or UP	No continuity
			TAIL of HEAD	Continuity
	22 – Ground	Headlight dimmer switch position	Low	Continuity
			High or Flash	No continuity
Voltage	3 – Ground	–		Battery voltage
	10 – Ground	–		Battery voltage
	16 – Ground	Ignition switch position	Lock or ACC	No voltage
			ON	Battery voltage
	18 – Ground	–		Battery voltage
	21 – Ground	Engine condition (with ignition ON)	Run	Battery voltage
			Stop	No voltage

* 1: There is resistance because this circuit is grounded through the motor.
* 2: Connect the test leads so that the current from the ohmmeter can flow according to the above orders.

If the circuit is as specified, replace the relay.

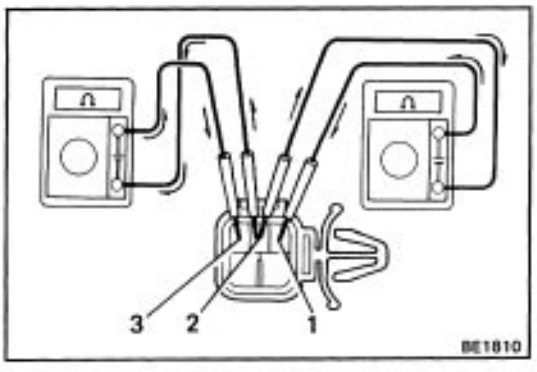

2. INSPECT LIGHT RETRACTOR MOTOR
(Continuity: Diode)

(a) Set the motor to any position except the uppermost or lowermost position.
(b) Connect the ohmmeter test lead so that the current from the meter can flow from terminal 1 to 2, check that there is no continuity.
(c) Connect the ohmmeter test lead so that the current from the meter can flow from terminal 3 to 2, check that there is no continuity.

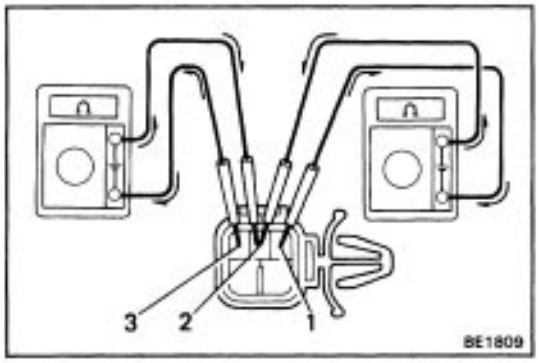

(d) Reverse the test leads of ohmmeter, check that there is continuity.
If continuity is not as specified, replace the motor.

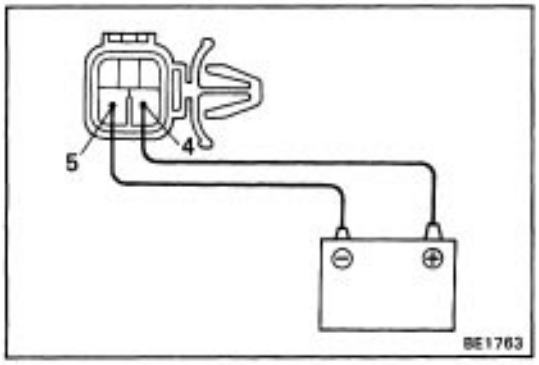

(Operation)
Connect the positive (+) lead from the battery to terminal
4 and the negative (–) lead to terminal 5, check that the motor operates.
If operation is not as specified, replace the motor.

Turn Signal and Hazard Warning System

1. INSPECT SWITCHES
(Turn Signal Switch)
See Headlight Dimmer and Turn Signal Switch on page BE–25.
(Hazard Warning Switch/Continuity)

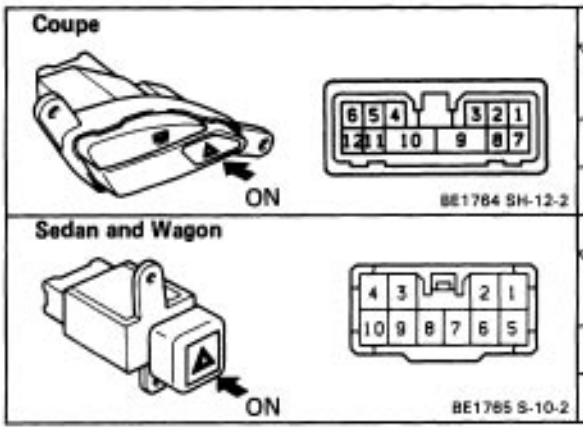

Coupe

Terminal / Switch position	1	2	3	4	5	6	Illumination 11	Illumination 12
OFF	○	○					○	○
IN		○	○	○	○	○		

Sedan and Wagon

Terminal / Switch position	Illumination 1	Illumination 2	5	6	7	8	9	10
OFF	○	○			○			○
ON			○	○	○	○	○	

If continuity is not as specified, replace the switch.

2. INSPECT TURN SIGNAL FLASHER
(a) Connect the positive (+) lead from the battery to terminal 2 and the negative (–) lead to terminal 1.
(b) Connect the two turn signal light bulbs parallel to each other to terminals 1 and 3, check that the bulbs flash.
HINT: The turn signal lights should flash 60 to 120 times per minute.
If one of the front or rear turn signal lights has an open circuit, the number of flashers will be more than 140 per minute.
If operation is not as specified, replace the flasher.

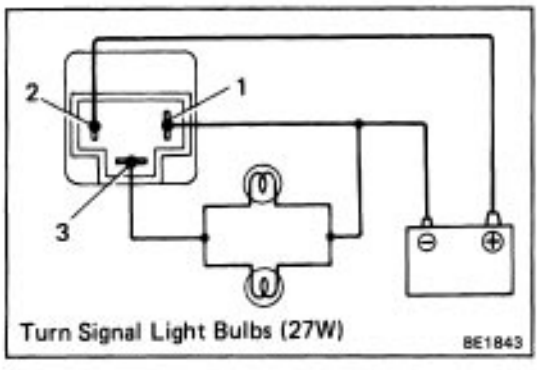

WIPER AND WASHER SYSTEM

Troubleshooting

Problem	Possible cause	Remedy	Page	
			Front	Rear
Wipers do not operate or return to off position	WIPER fuse blown Wiper motor faulty Wiper switch faulty Wiring or ground faulty	Replace fuse and check for short Check motor Check switch Repair as necessary	BE–3 BE–37 BE–35	BE–3 BE–38 BE–37
Wipers do not operate in INT position	Wiper relay faulty Wiper switch faulty Wiper motor faulty Wiring or ground faulty	Check relay Check switch Check motor Repair as necessary	BE–35 BE–37	BE–38 BE–37 BE–38
Washers do not operate	Washer hose or nozzle clogged Washer motor faulty Wiper switch faulty Wiring faulty	Repair as necessary Replace motor Check switch Repair as necessary	BE–39 BE–35	BE–39 BE–37

Parts Replacement

See Replacement of Combination Switch on page BE–16.

Parts Inspection

Wiper System

1. INSPECT SWITCHES

(Front Wiper and Washer Switch/Continuity)

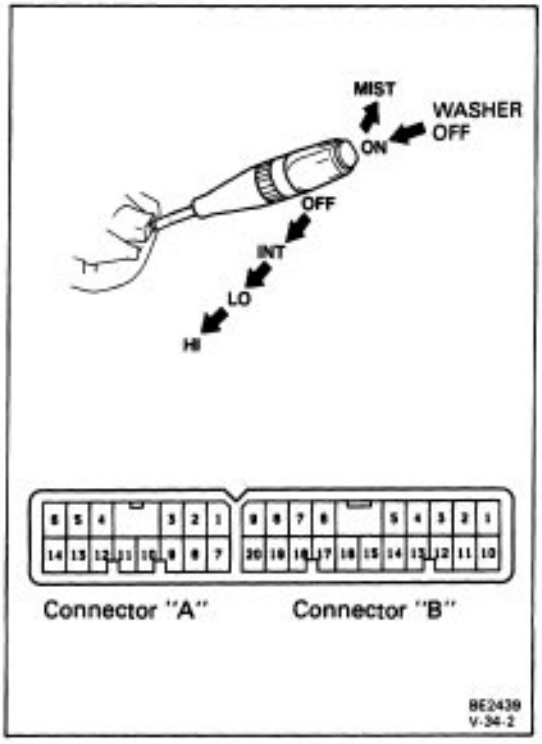

Switch position	Terminal (Color)	B-4 (L-R)	B-7 (L-B)	B-13 (L-O)	B-18 (L-W)	B-8 (L)	B-16 (B)
Wiper	MIST		○		○		
	OFF	○	○				
	INT	○	○				
	LO		○		○		
	HI			○	○		
Washer	OFF						
	ON					○	○

If continuity is not as specified, replace the switch.

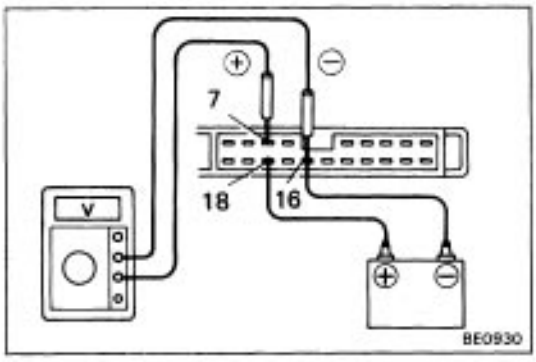

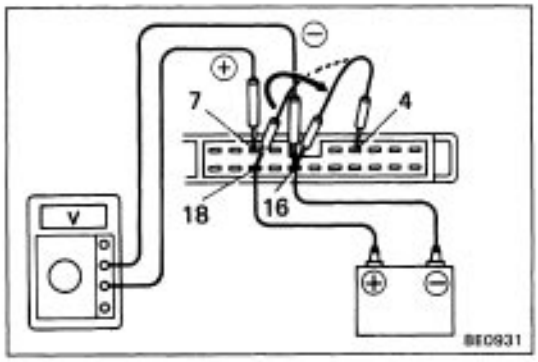

(Front Wiper Switch/intermittent operation)

(a) Turn the wiper switch to INT position.

(b) (Variable type)
Turn the intermittent time control switch to FAST position.

(c) Connect the positive (+) lead from the battery to terminal 18 and the negative (–) lead to terminal 16.

(d) Connect the positive (+) lead from the voltmeter to terminal 7 and the negative (–) lead to terminal 16, check that the meter needle indicates battery voltage.

(e) After connecting terminal 4 to terminal 18, connect to terminal 16.
Then, check that the voltage rises from 0 volt to battery voltage within the times as shown in the table.

INT time control switch position	Voltage
FAST	1.6 ± 1 sec. — Battery voltage / 0 volt
SLOW	10.7 ± 5 sec. — Battery voltage / 0 volt
Non variable type	3.3 ± 1 sec. — Battery voltage / 0 volt

If operation is not as specified, replace the switch.

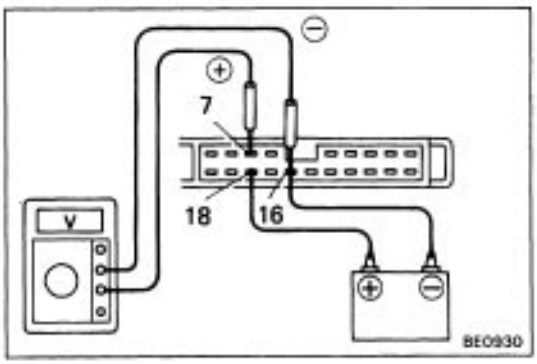

(Washer Switch/Washer Linked Wiper Operation)

(a) Connect the positive (+) lead from the battery to terminal 18 and the negative (–) lead to terminal 16.

(b) Connect the positive (+) lead from the voltmeter to terminal 7 and the negative (–) lead to terminal 16.

(c) Push in the washer switch. Check that the voltage changes as shown in the table.

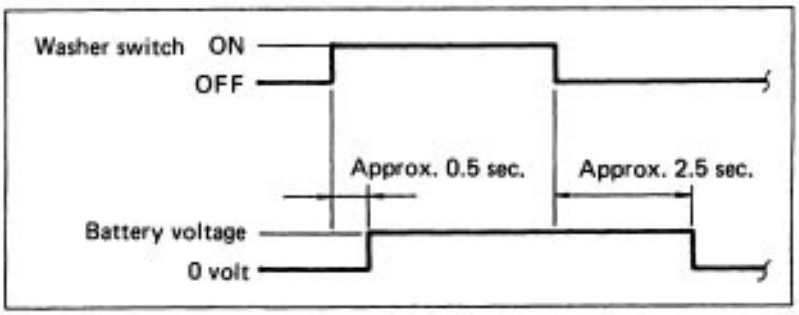

If operation is not as specified, replace the switch.

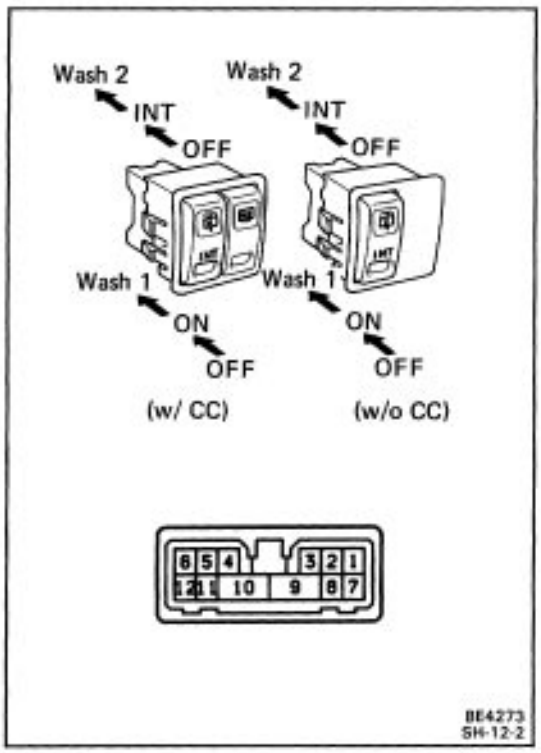

(Rear Wiper and Washer Switch /Continuity)

Terminal / Switch position	1	3	4	7	8	Illumination 11	Illumination 12
Wash 2	○		○	○	○		
INT			○		○		
OFF						○	○
ON		○			○		
Wash 1	○	○		○	○		

If continuity is not as specified, replace the switch.

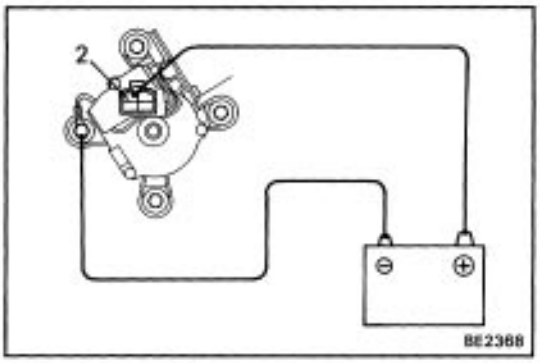

2. INSPECT MOTORS

(Front Wiper Motor/Operation at Low Speed)

Connect the positive (+) lead from the battery to terminal 2 and the negative (–) lead to the motor body, check that the motor operates at low speed.

If operation is not as specified, replace the motor.

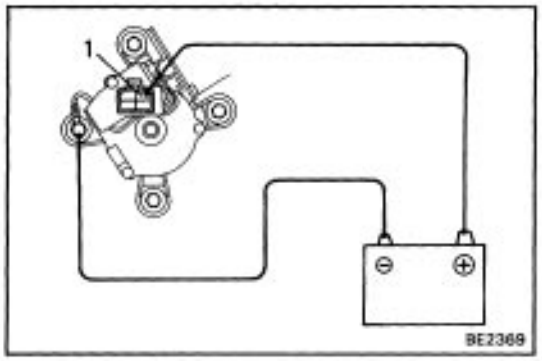

(Front Wiper Motor/Operation at High Speed)

Connect the positive (+) lead from the battery to terminal 1 and the negative (–) lead to the motor body, check that the motor operates at high speed.

If operation is not as specified, replace the motor.

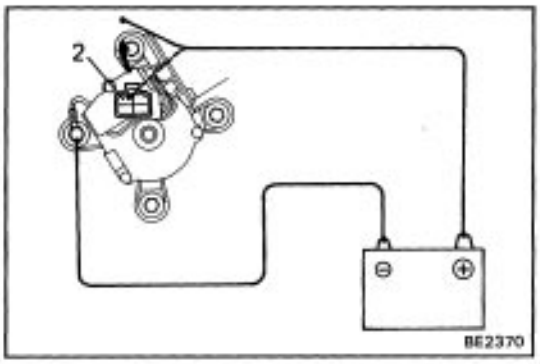

(Front Wiper Motor/Operation, Stopping at Stop Position)

(a) Operate the motor at low speed and stop the motor operation anywhere except at the stop position by disconnecting terminal 2.

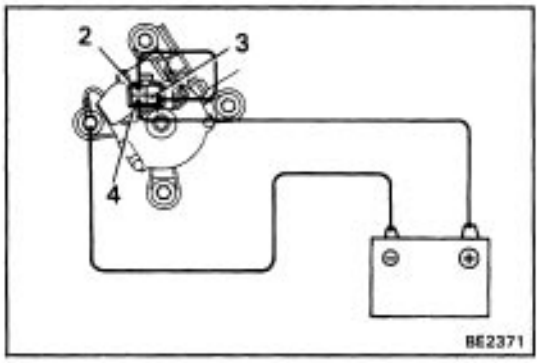

(b) Connect terminal 2 and 3.
(c) Connect the positive (+) lead from the battery to terminal 4 and the negative (–) lead to the motor body, check that the motor stops running at the stop position after the motor operates again.
If operation is not as specified, replace the motor.

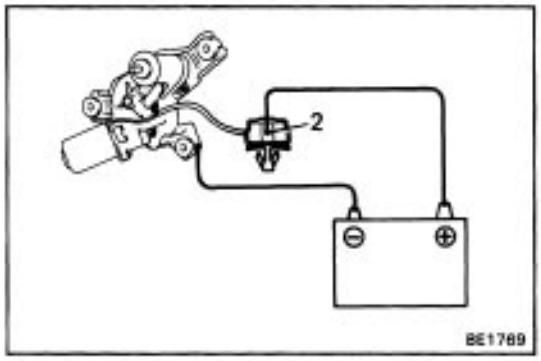

(Rear Wiper Motor/Operation)
Connect the positive (+) lead from the battery to terminal
2 and the negative (–) lead to the motor body, check that the motor operates.
If operation is not as specified, replace the motor.

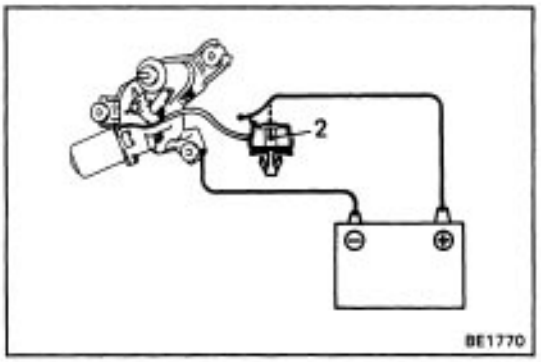

(Rear Wiper Motor/Operation, at Stopping Position)
(a) Operate the motor and stop the motor operation anywhere except stop position by disconnecting terminal 2.

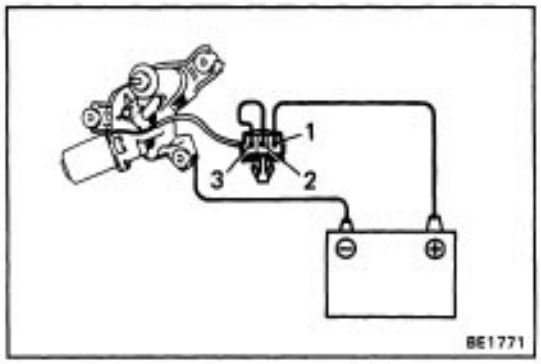

(b) Connect terminal 2 and 3.
(c) Connect the positive (+) lead from the battery to terminal 1 and the negative (–) lead to the motor body, check that the motor stops running at the stop position after the motor operates again.
If operation is not as specified, replace the motor.

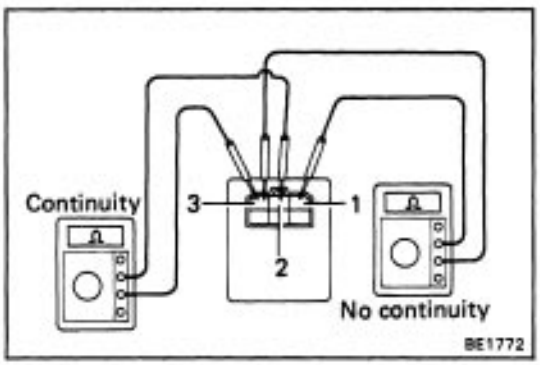

3. INSPECT REAR WIPER RELAY
(Continuity)
(a) Check that there is no continuity between terminals 1 and 3.
(b) Check that there is continuity between terminals 2 and
3.

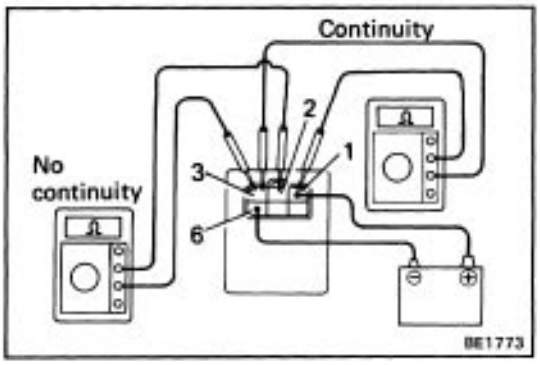

(Operation)

(a) Connect the positive (+) lead from the battery to terminal 1 and the negative (–) lead to terminal6.

(b) Check that there is continuity between terminals 1 and 3.

(c) Check that there is no continuity between terminals 2 and 3.

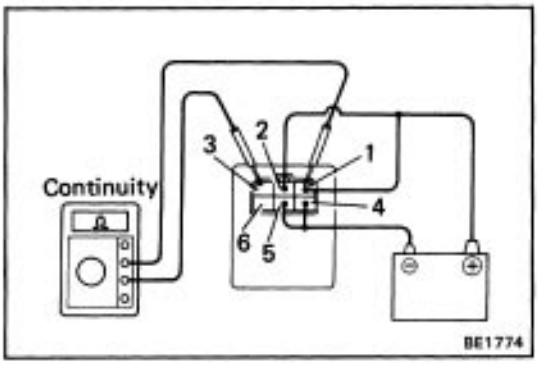

(d) Connect the positive (+) leads from the battery to terminals 1 and 2, and the negative (–) leads to terminals 4 and 5, check that there is continuity between terminals 1 and 3 for 3 to 5 seconds, then there is no continuity.

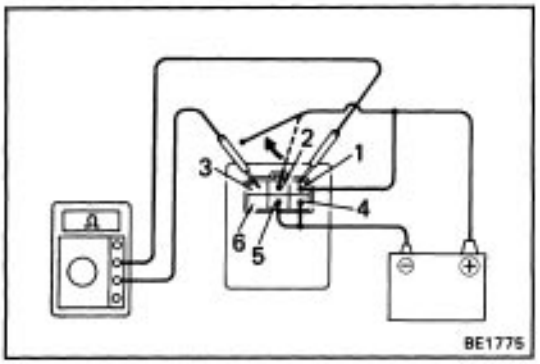

(e) Disconnect the positive (+) lead from terminal 2, check that there is no continuity between terminals
1 and 3 for 9 to 15 seconds, then there is continuity.
If operation is not as specified, replace the relay.

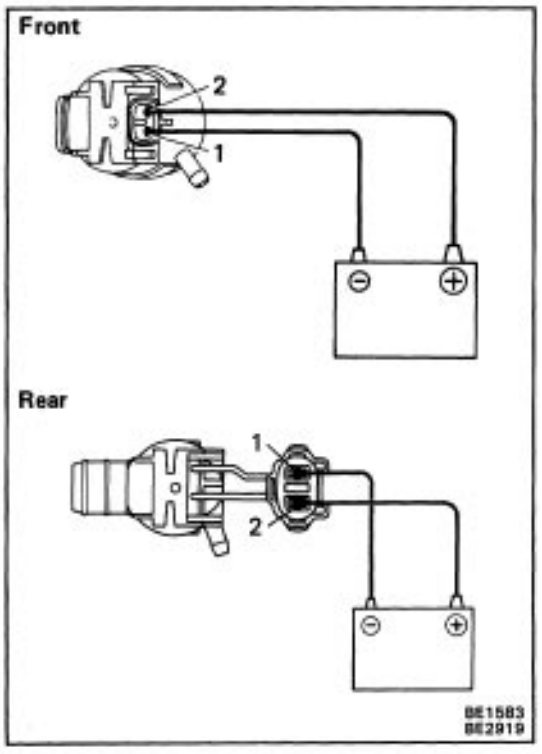

Washer System

1. INSPECT SWITCH

See Wiper System on page BE–35.

2. INSPECT WASHER MOTOR

Connect the positive (+) lead from the battery to terminal 2 and the negative (–) lead to terminal 1, check that the motor operates.

NOTICE: These tests must be performed quickly (Within 20 seconds) to prevent the coil from burning out.

If operation is not as specified, replace the motor.

COMBINATION METER
Troubleshooting

Problem	Possible cause	Remedy	Page
* Gauges and warning lights do not operate	”GAUGE” fuse faulty Wiring faulty	Replace fuse and check for– short	BE–3
Tachometer does not operate	Tachometer faulty Wiring or ground faulty	Check tachometer Repair as necessary	BE–48
Fuel gauge does not operate	Receiver gauge faulty Sender gauge faulty Wiring or ground faulty	Check gauge Check gauge Repair as necessary	BE–49 or 50 BE–51
Fuel level warning light does not light	Bulb burned out Fuel level warning switch faulty Wiring or ground faulty	Replace bulb Check switch Repair as necessary	BE–52
Water temperature gauge does not operate	Receiver gauge faulty Sender gauge faulty Wiring or ground faulty	Check gauge Check gauge Repair as necessary	BE–54 BE–55
Low oil pressure warning light does not light	Bulb burned out Low oil pressure warning switch faulty Wiring or ground faulty	Replace bulb Check switch Repair as necessary	BE–55
Oil pressure gauge does not operate	Receiver gauge faulty Sender gauge faulty Wiring or ground faulty	Check gauge Check gauge Repair as necessary	BE–56 B E–56
Brake warning light does not light	Bulb burned out Brake fluid level warning switch faulty Parking brake switch faulty Wiring or ground faulty	Replace bulb Check switch Check switch Repair as necessary	BE–57 BE–57

*: Tachometer, Fuel Gauge, Water Temperature Gauge, Brake Warning, Low Oil Pressure Warning, Fuel Level Warning and Check Engine Warning.

Meter Circuit

Coupe: w/o Tachometer

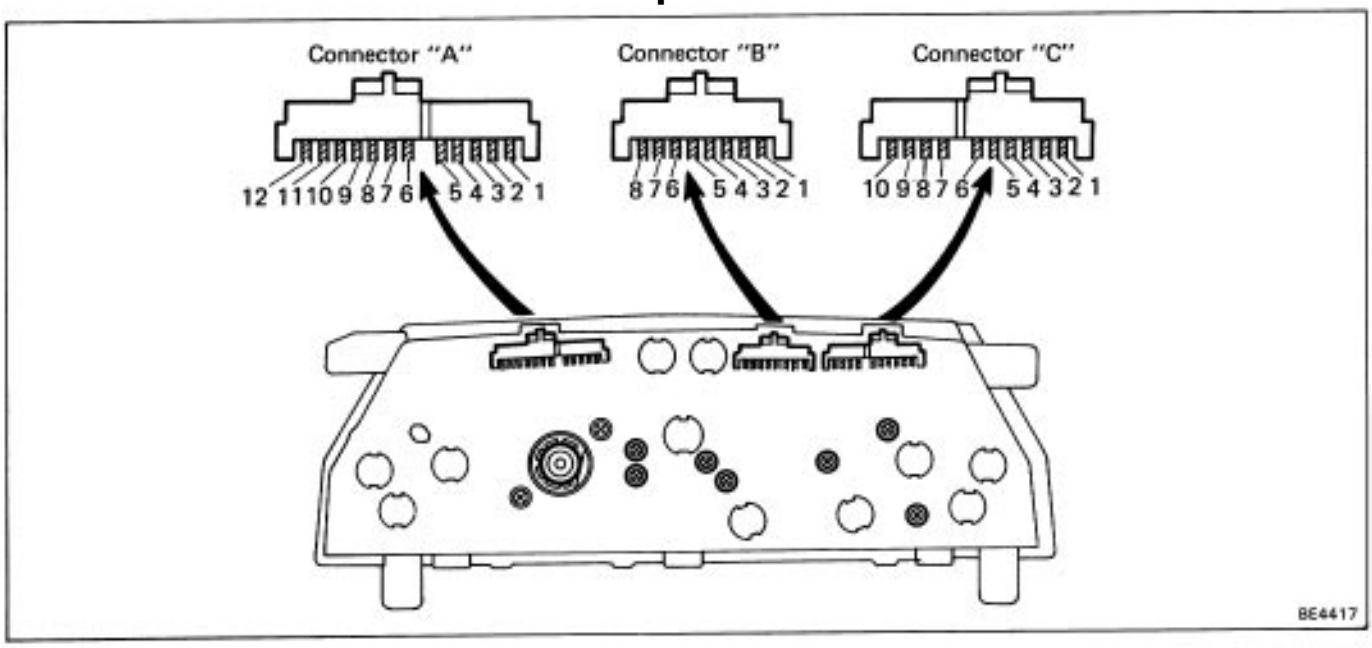

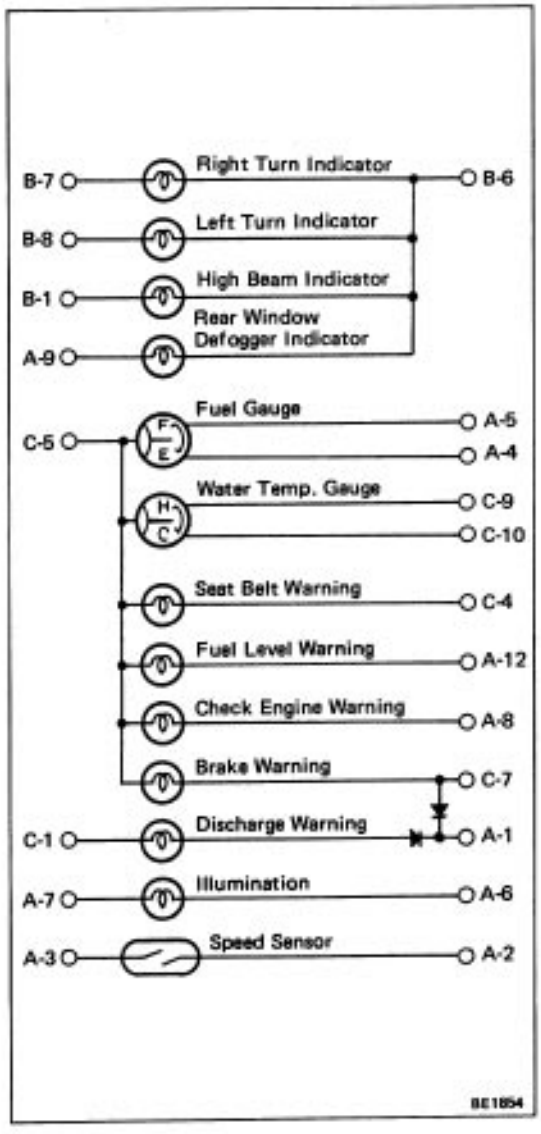

No.		Wiring connector side
A	1	CHARGE Fuse
	2	Ground
	3	Speed Control Unit
	4	Ground
	5	Fuel Sender Gauge–terminal 1
	6	Light Control Rheostat–terminal 4
	7	TAIL Fuse
	8	(California: 4A–FE Engine) EGR Temperature Sensor
	9	Rear Window Defogger Switch–terminal 10
	12	Fuel Sender Gauge–terminal 3
B	1	Combination Switch–terminal A3
	6	Ground
	7	Combination Switch–terminal A8
	8	Combination Switch–terminal A5
C	1	ENGINE Fuse
	4	Integration Relay–terminal 2
	5	GAUGE Fuse
	7	Brake Fluid Level Warning Switch–terminal 1 and Parking Brake Switch
	9	Ground
	10	Water Temperature Sender Gauge

Coupe: w/ Tachometer

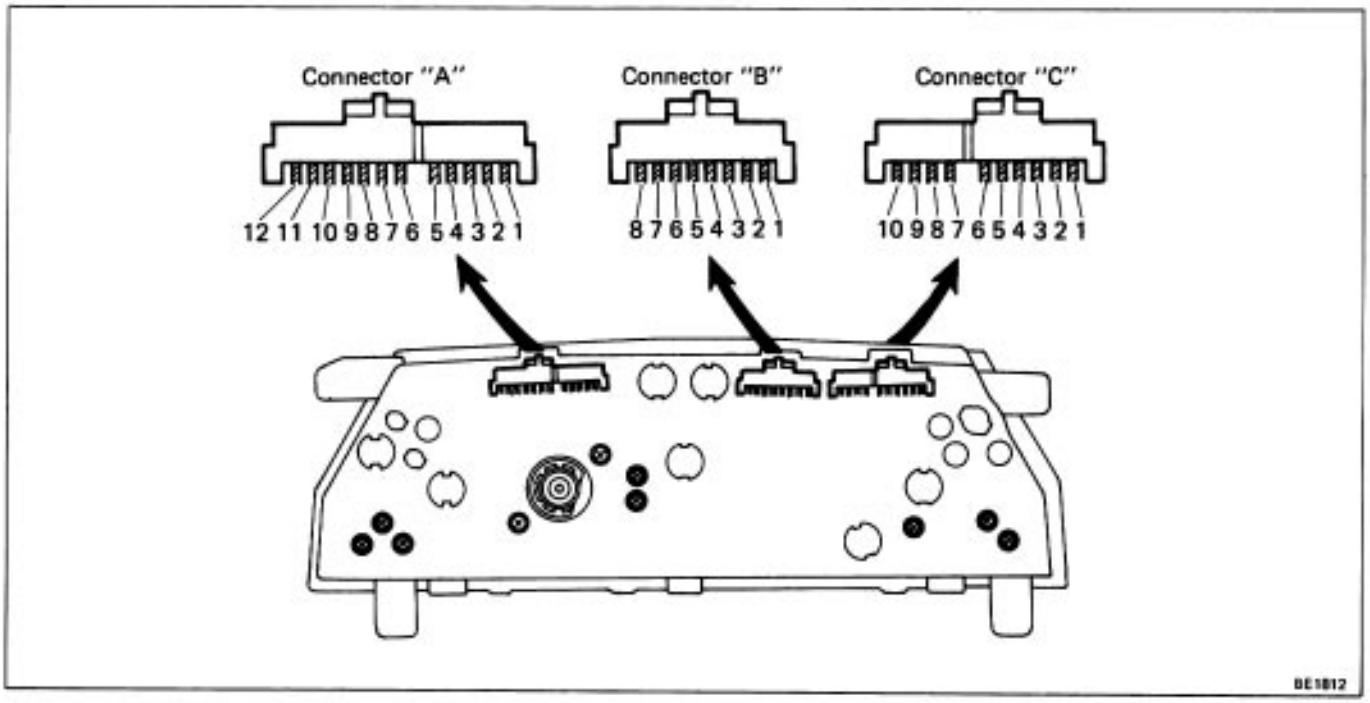

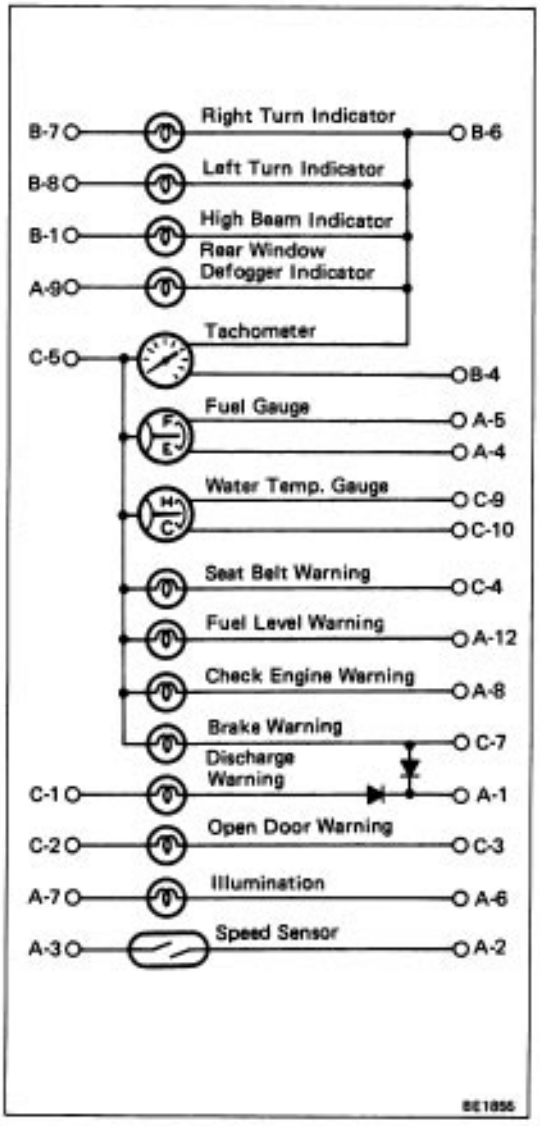

No.		Wiring connector side
A	1	CHARGE Fuse
	2	Ground
	3	Speed Control Unit
	4	Ground
	5	Fuel Sender Gauge–terminal 1
	6	Light Control Rheostat–terminal 4
	7	TAIL Fuse
	8	(California: 4A–FE Engine) EGR Temperature Sensor (California: 4A–GE Engine) EGR Temperature Sensor and ENGINE ECU (Ex. California: 4A–GE Engine) TCCS ECU
	9	Rear Window Defogger Switch–terminal 10
	12	Fuel Sender Gauge–terminal 3
B	1	Combination Switch–terminal A3
	4	(4A–FE Engine) Igniter (4A–GE Engine) Igniter
	6	Ground
	7	Combination Switch–terminal A8
	8	Combination Switch–terminal A5
C	1	ENGINE Fuse
	2	(4A–GE Engine) DOME Fuse
	3	(4A–GE Engine) Door Courtesy Switch
	4	Integration Relay–terminal 2
	5	GAUGE Fuse
	7	Brake Fluid Level Warning Switch–terminal 1 and Parking Brake Switch
	9	Ground
	10	Water Temperature Sender Gauge

Coupe: Indicator light (4A–FE Engine)

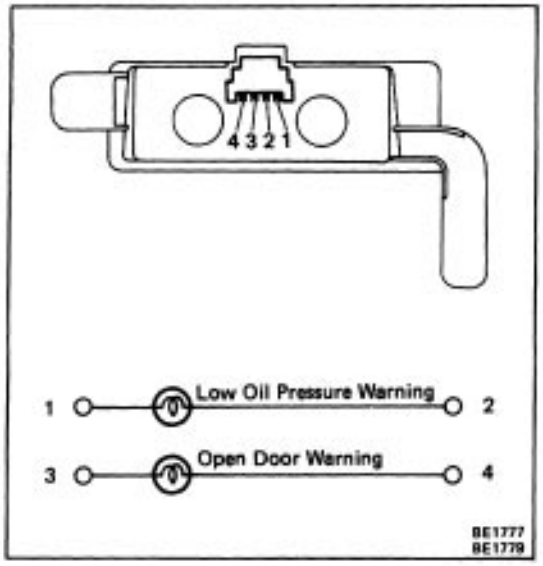

No.	Wiring connector side
1	GAUGE Fuse
2	Low Oil Pressure Warning Switch
3	DOME Fuse
4	Door Courtesy Switch

Coupe: Combination Gauge (4A–GE Engine)

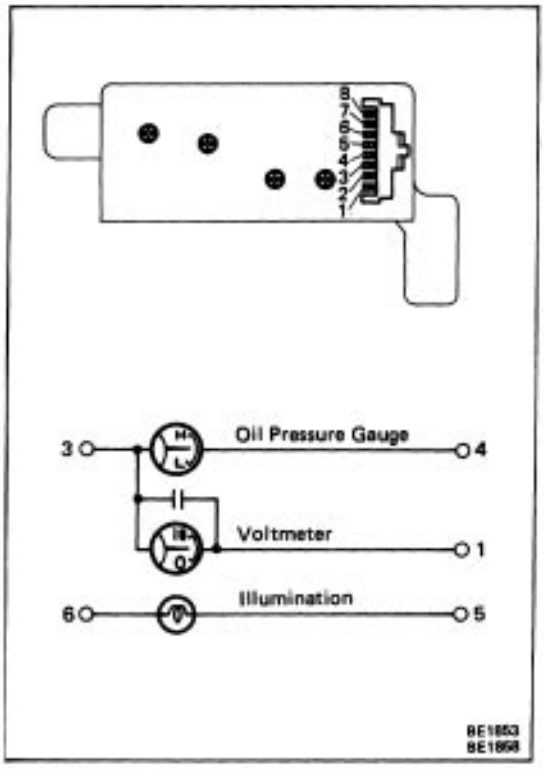

No.	Wiring connector side
1	Ground
3	GAUGE Fuse
4	Oil Pressure Sender Gauge
5	Light Control Rheostat–terminal 4
6	TAIL Fuse

Sedan and Wagon: w/o Tachometer M/o Theft Deterrent System)

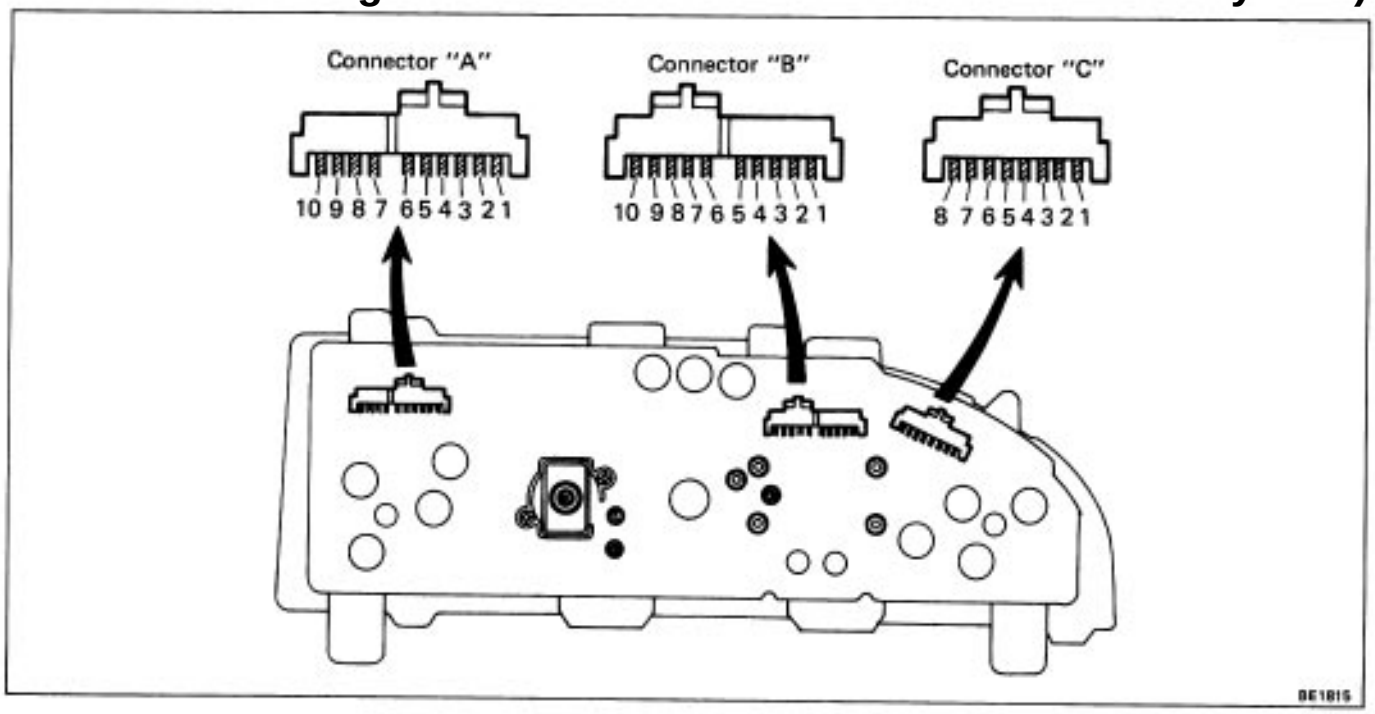

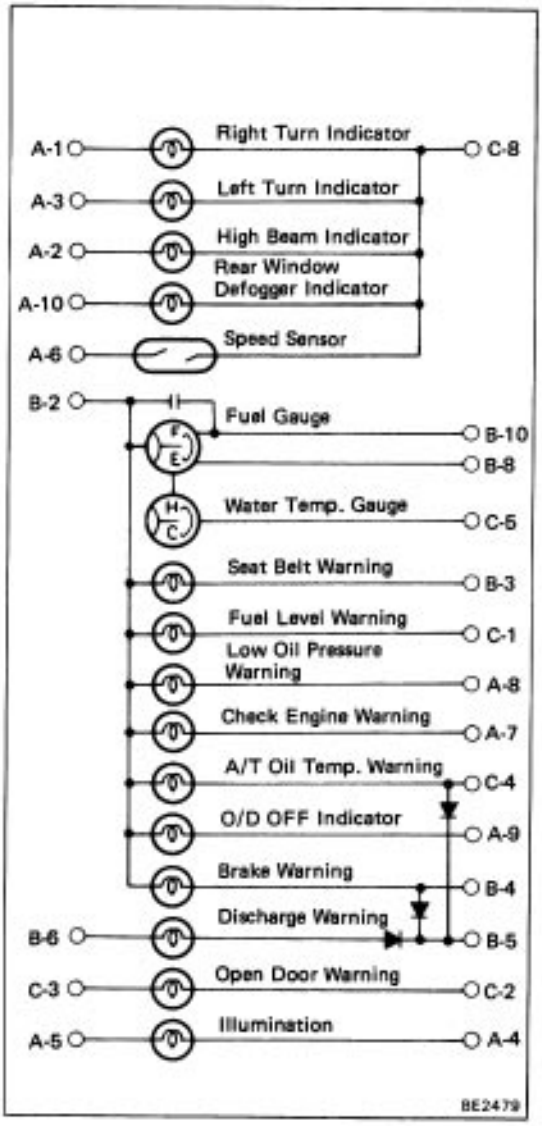

No.		Wiring connector side
A	1	Combination Switch–terminal A8
	2	Combination Switch–terminal A3
	3	Combination Switch–terminal A5
	4	Light Control Rheostat–terminal 1
	5	TAIL Fuse
	6	Speed Control Unit
	7	(California) EGR Temperature Sensor (4A–FE) ENGINE ECU
	8	Low Oil Pressure Warning Switch
	9	(All–Trac/4WD w/ AM O/D Main Switch
	10	Rear Window Defogger Switch–terminal 10
B	2	GAUGE Fuse
	3	Integration Relay–terminal 2
	4	Brake Fluid Level Warning Switch–terminal 1 and Parking Brake Switch
	5	CHARGE Fuse
	6	ENGINE Fuse
	8	Fuel Sender Gauge–terminal 3
	10	Ground
C	1	Fuel Sender Gauge–terminal 2
	2	Door Courtesy Switch
	3	DOME Fuse
	4	(All–Trac/4WD w/ AM A/T Oil Temperature Warning Switch
	5	Water Temperature Sender Gauge
	8	Ground

Sedan and Wagon: w/o Tachometer (w/ Theft Deterrent System)

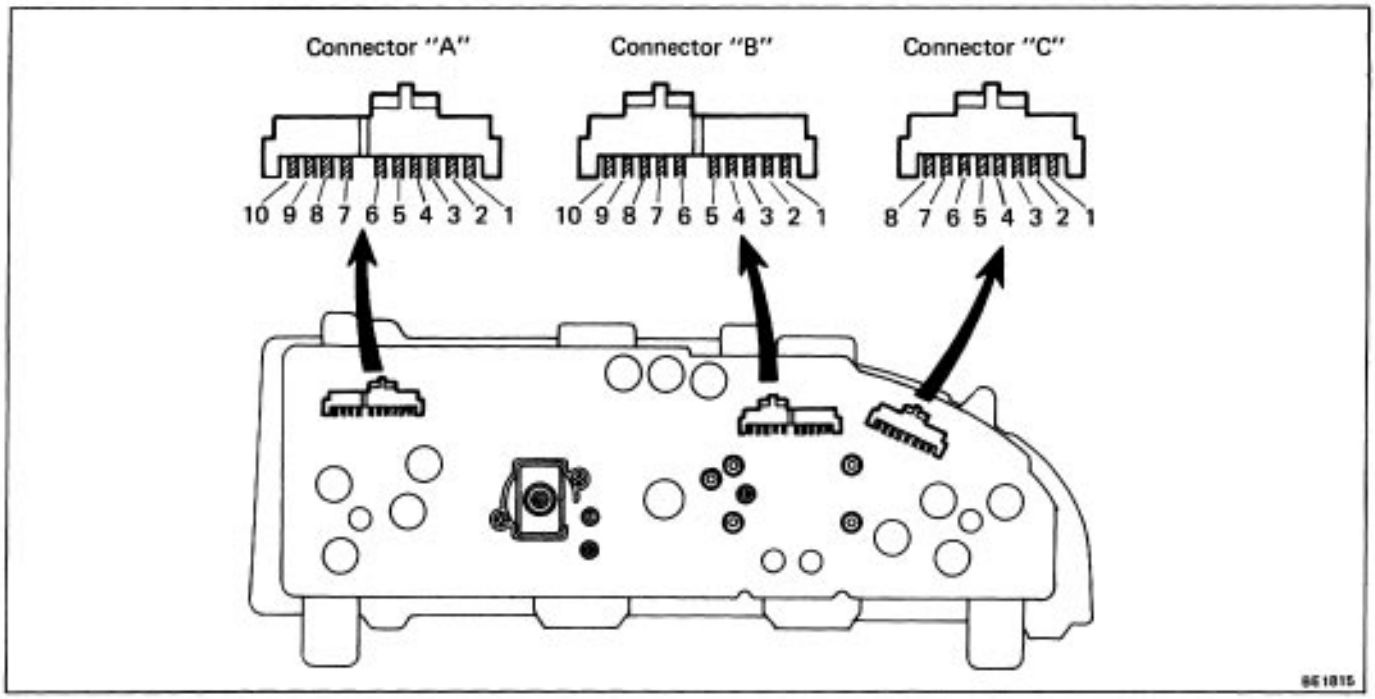

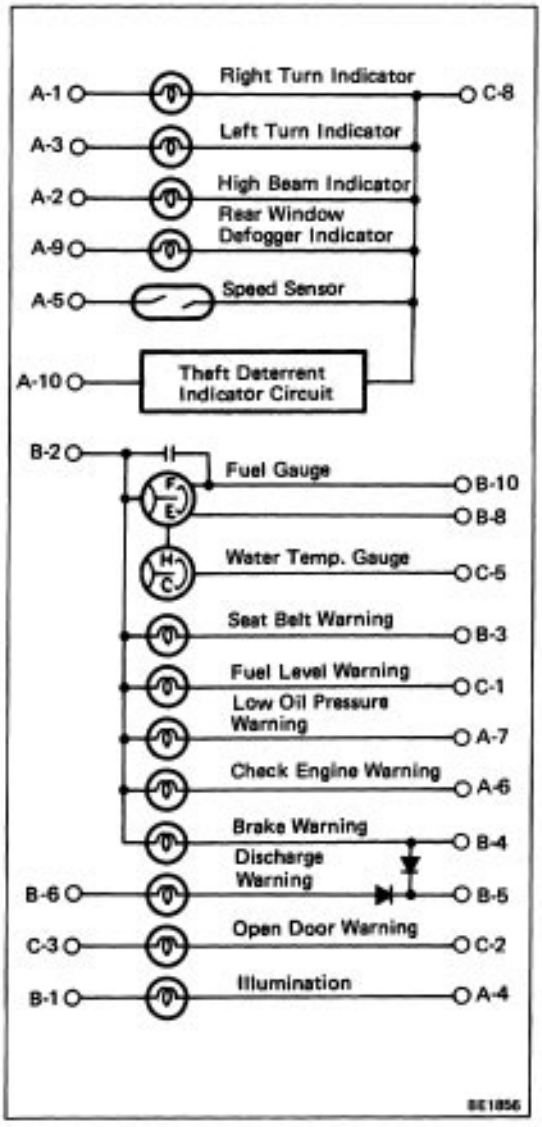

No.		Wiring connector side
A	1	Combination Switch–terminal A8
	2	Combination Switch–terminal A3
	3	Combination Switch–terminal A5
	4	Light Control Rheostat–terminal 1
	5	Speed Control Unit
	6	(California) EGR Temperature Sensor
	7	Low Oil Pressure Warning Switch
	9	Rear Window Defogger Switch–terminal 10
	10	Theft Deterrent ECU
B	1	TAIL Fuse
	2	GAUGE Fuse
	3	Integration Relay–terminal 2
	4	Brake Fluid Level Warning Switch–terminal 1 and Parking Brake Switch
	5	CHARGE Fuse
	6	ENGINE Fuse
	8	Fuel Sender Gauge–terminal 3
	10	Ground
C	1	Fuel Sender Gauge–terminal 2
	2	Door Courtesy Switch
	3	DOME Fuse
	5	Water Temperature Sender Gauge
	8	Ground

Sedan: w/ Tachometer (w/o Theft Deterrent System)

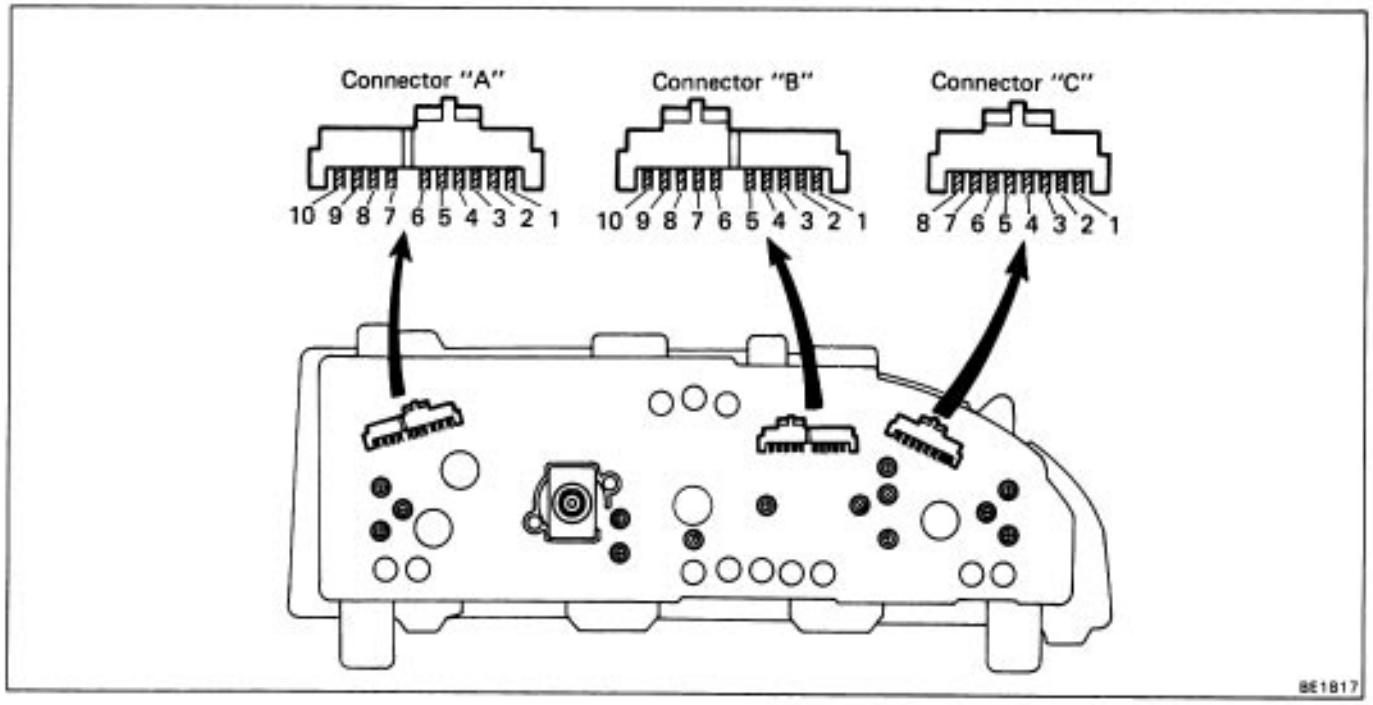

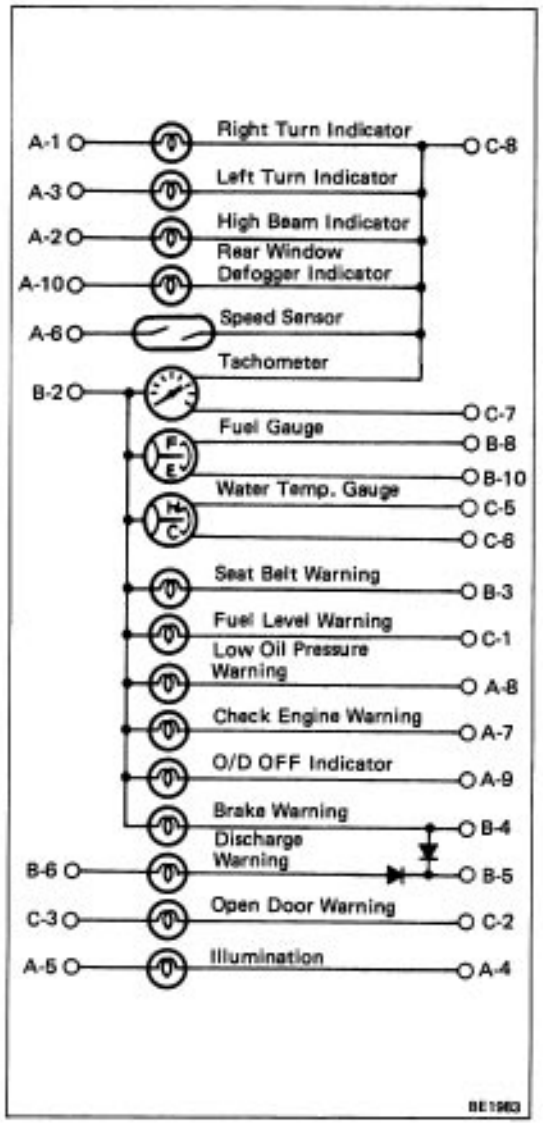

No.		Wiring connector side
A	1	Combination Switch–terminal A8
	2	Combination Switch–terminal A3
	3	Combination Switch–terminal A5
	4	Light Control Rheostat–terminal 1
	5	TAIL Fuse
	6	Speed Control Unit
	7	(California) EGR Temperature Sensor (4A–FE) ENGINE ECU
	8	Low Oil Pressure Warning Switch
	9	(A/T) 0/D Main Switch
	10	Rear Window Defogger Switch–terminal 10
B	2	GAUGE Fuse
	3	Integration Relay–terminal 2
	4	Brake Fluid Level Warning Switch–terminal 1 and Parking Brake Switch
	5	CHARGE Fuse
	6	ENGINE Fuse
	8	Fuse Sender Gauge–terminal 3
	10	Ground
C	1	Fuel Sender Gauge–terminal 2
	2	Door Courtesy Switch
	3	DOME Fuse
	5	Water Temperature Sender Gauge
	6	Ground
	7	Igniter
	8	Ground

Sedan: wI Tachometer (w/ Theft Deterrent System)

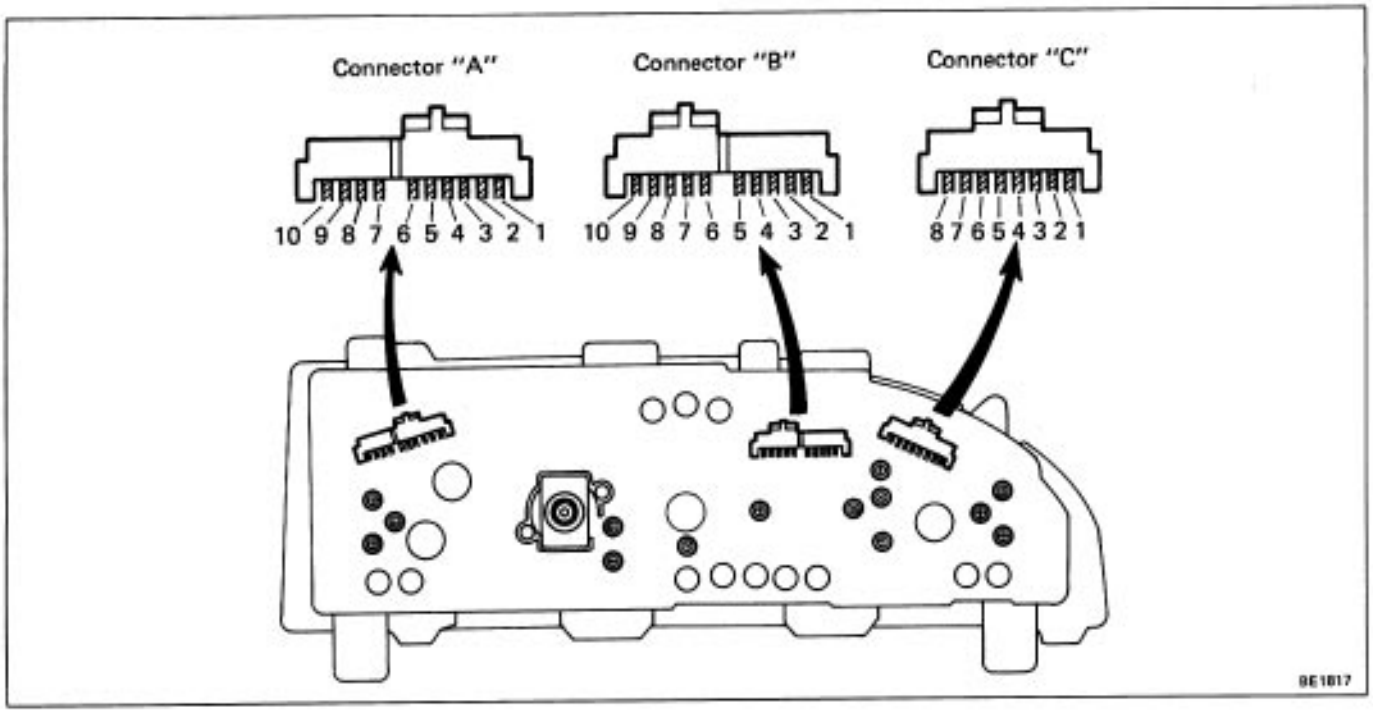

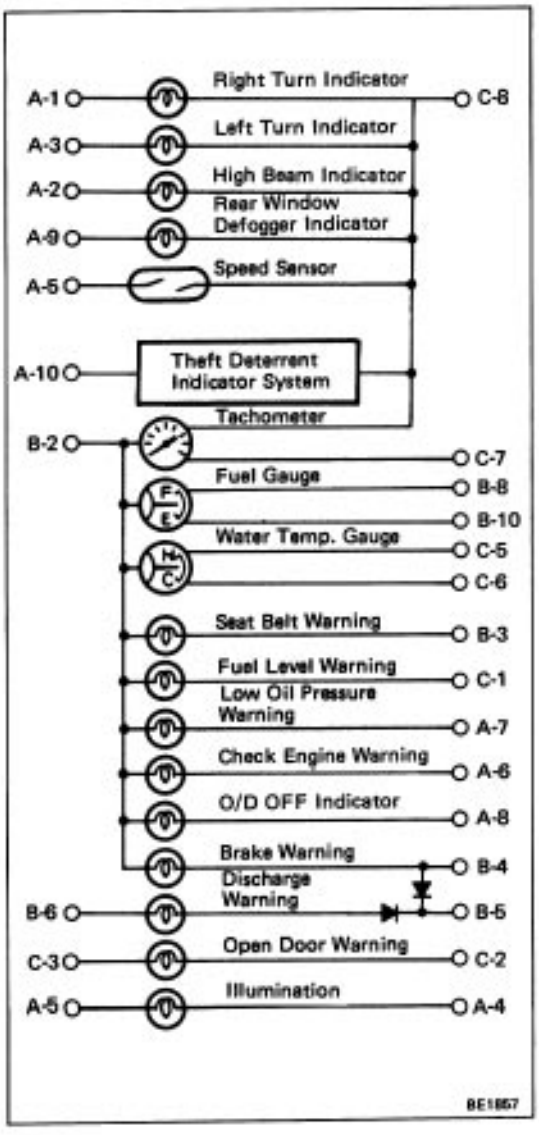

No.		Wiring connector side
A	1	Combination Switch–terminal A8
	2	Combination Switch–terminal A3
	3	Combination Switch–terminal A5
	4	Light Control Rheostat–terminal 1
	5	Speed Control Unit
	6	(California) EGR Temperature Sensor
	7	Low Oil Pressure Warning Switch
	8	(A/T) 0/D Main Switch
	9	Rear Window Defogger Switch–terminal 10
	10	Theft Deterrent ECU
B	1	TAIL Fuse
	2	GAUGE Fuse
	3	Integration Relay–terminal 2
	4	Brake Fluid Level Warning Switch–terminal 1 and Parking Brake Switch
	5	CHARGE Fuse
	6	ENGINE Fuse
	8	Fuel Sender Gauge–terminal 3
	10	Ground
C	1	Fuel Sender Gauge–terminal 2
	2	Door Courtesy Switch
	3	DOME Fuse
	5	Water Temperature Sender Gauge
	6	Ground
	7	Igniter
	8	Ground

[mph]

Standard indication	Allowable range
20	20 – 23
40	40 – 43.5
60	60 – 64
80	80 – 84.5
100	100 – 105

[km/h]

Standard indication	Allowable range
20	18 – 23
40	40 – 44
60	60 – 64.5
80	80 – 85
100	100 – 105
120	120 – 125.5
140	140 – 146
160	160 – 167

Parts Inspection

Speedometer System

1. INSPECT SPEEDOMETER (ON–VEHICLE)

(a) Using a speedometer tester, inspect the speedometer for allowable indication error and check the operation of the odometer.

HINT: Tire wear and tire over or under inflation will increase the indication error.

If error is excessive, replace the speedometer.

(b) Check the speedometer for pointer vibration and abnormal noise.

HINT: Pointer vibration can be caused by a loose speedometer cable.

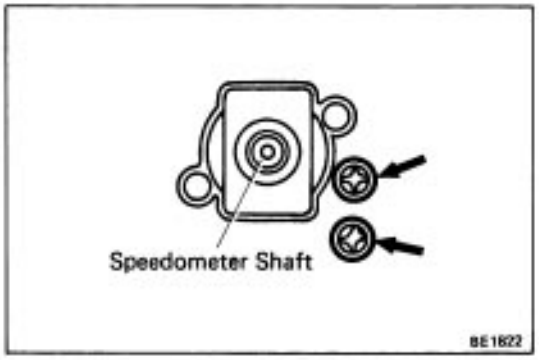

2. INSPECT SPEED SENSOR

Check that there is continuity between terminals four times per each revolution of the speedometer shaft.

If operation is not as specified, replace the speedometer.

DC 13.5V, 25°C 177° F) [rpm]

Standard indication	Allowable range	
	Coupe	Sedan
700	610 – 750	580 – 720
3,000	2,850 – 3,150	2,800 – 3,200
5,000	4,850 – 5,150	4,800 – 5,200
7,000	6,790 – 7,210	6,700 – 7,300

Tachometer System

INSPECT TACHOMETER (ON–VEHICLE)

(a) Connect a tune–up test tachometer, and start the engine.

NOTICE:

- Reversing the connection of the tachometer will damage the transistors and diodes inside.
- When removing or installing the tachometer, be careful not to drop or subject it to heavy shocks.

(b) Compare the tester and tachometer indications.

If error is excessive, replace the tachometer.

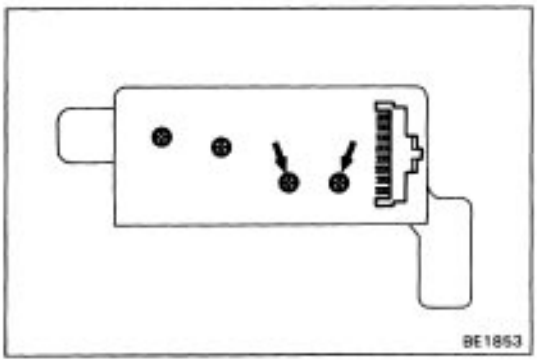

Voltmeter System (Coupe)

INSPECT RECEIVER GAUGE

Measure the resistance between terminals.

Resistance: Approx. 310Ω

If resistance value is not as specified, replace the voltmeter.

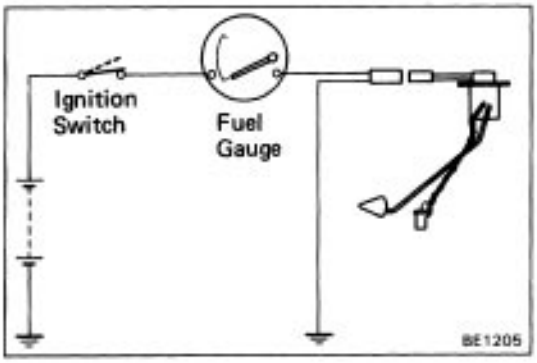

Fuel Gauge System

1–1. (Sedan and Wagon: w/o Tachometer)

INSPECT RECEIVER GAUGE

(Operation)

(a) Disconnect the connector from the sender gauge.

(b) Turn the ignition switch ON, check that the receiver gauge needle indicates EMPTY.

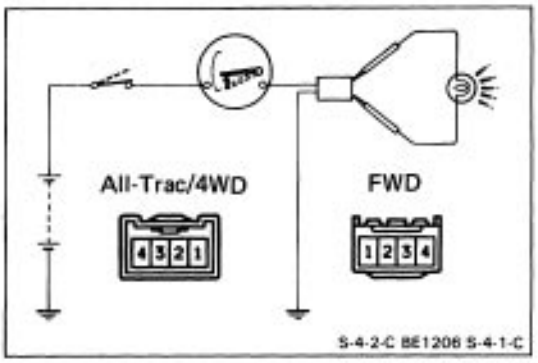

(c) Connect terminals 3 and 4 on the wire harness side connector through a 3.4W test bulb.

(d) Turn the ignition switch ON, check that the bulb lights up and receiver gauge needle moves towards the full side.

If operation is not as specified, inspect the receiver gauge resistance and voltage regulator.

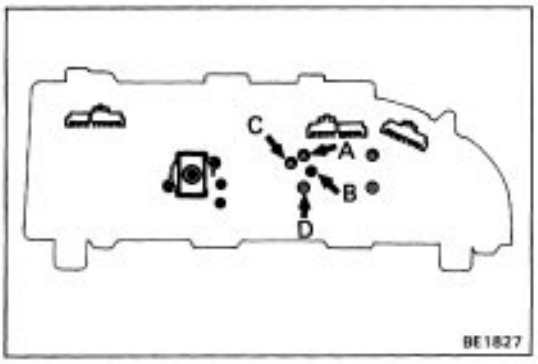

(Resistance)

Measure the resistance between terminals C and D.

Resistance: Approx. 55Ω

If resistance value is not as specified, replace the receiver gauge.

(Voltage Regulator)

(a) Connect the positive (+) lead from the battery to terminal A and the negative (–) lead to terminal B.

(b) Connect the positive (+) lead from the voltmeter to terminal C and the negative (–) lead to terminal B, check that the voltmeter needle vibrates near the 4.5V position.

If voltage value is not as specified, replace the receiver gauge.

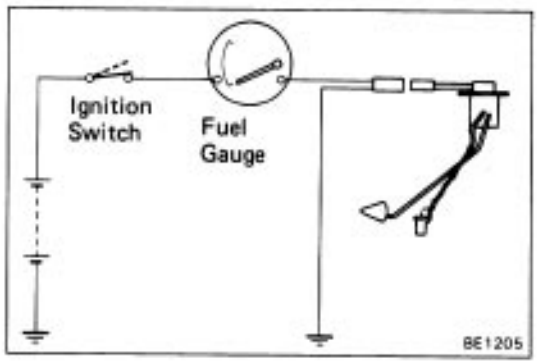

1–2. (Sedan and Wagon: w/ Tachometer
1 Coupe)
INSPECT RECEIVER GAUGE
(Operation)

(a) Disconnect the connector from the sender gauge.
(b) Turn the ignition switch ON, Check that the receiver gauge needle indicates EMPTY.

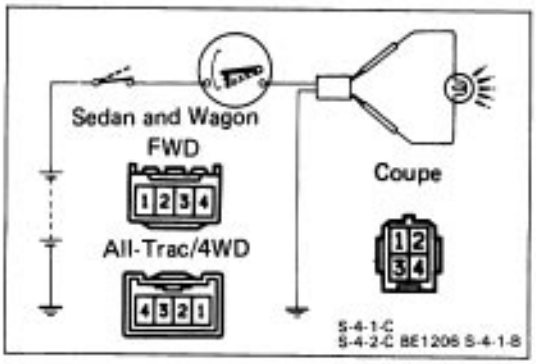

(c)–1 (Coupe)
Connect terminals 1 and 2 on the wire harness side connector through a 3.4W test bulb.
(c)–2 (Sedan and Wagon)
Connect terminals 3 and 4 on the wire harness side connector through a 3.4W test bulb.
(d) Turn the ignition switch ON, check that the bulb lights up and receiver gauge needle moves towards the full side.

HINT: Because of the silicon oil in the gauge, it will take a short time for the needle to stabilize.
If operation is not as specified, inspect the receiver gauge resistance.

(Resistance)
Measure the resistance between terminals.
If resistance value is not as specified, replace the receiver gauge.

Between terminals	Resistance (fl)	
	Coupe	Sedan and Wagon
A – B	Approx. 85	Approx. 100
A – C	Approx. 250	Approx. 200
B – C	Approx. 160	Approx. 100

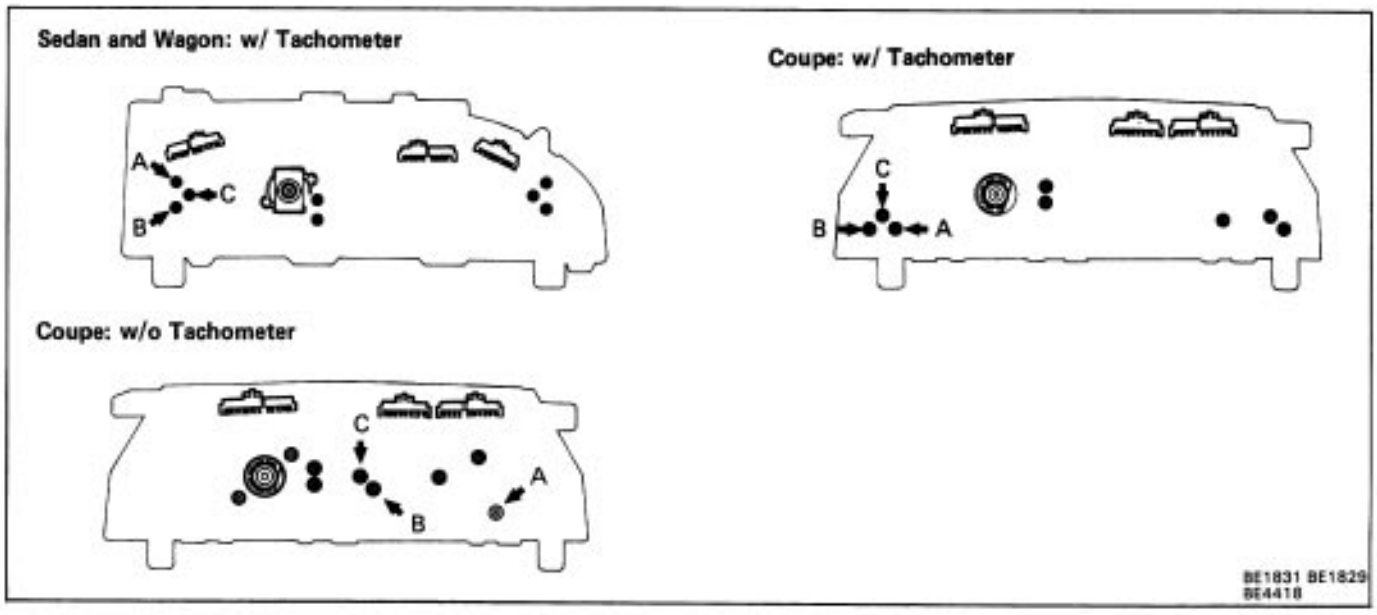

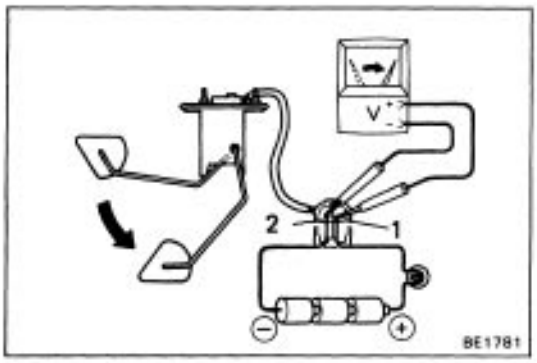

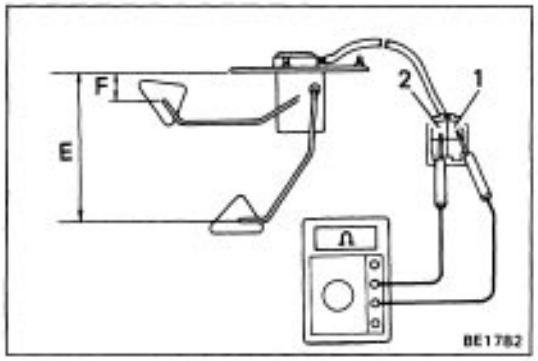

2–1. (Coupe)
INSPECT SENDER GAUGE
(Operation)

(a) Connect a series of three 1.5 V dry cell batteries.
(b) Connect the positive (+) lead from the dry cell batteries to terminal 1 through a 3.4 W test bulb and the negative (–) lead to terminal 2.
(c) Check that the voltage rises between terminals 1 and 2 as the float is moved from the top to bottom position.

(Resistance)

(d) Measure the resistance between terminals 1 and 2 for each float position.

Float position	mm (in.)	Resistance (Ω)
F	Approx. 72 (2.83)	Approx. 3
E	Approx. 172 (6.77)	Approx. 110

If resistance value is not as specified, replace the sender gauge.

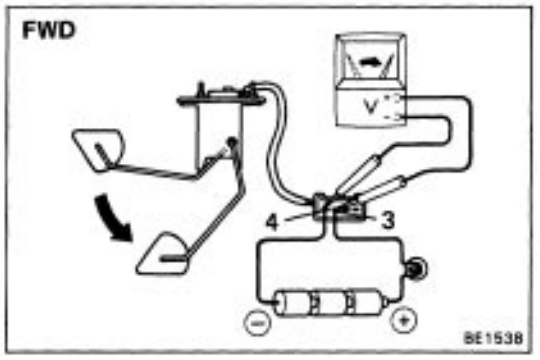

2–2. (Sedan and Wagon)
INSPECT SENDER GAUGE
(Operation)

(a) Connect a series of three 1.5 V dry cell batteries.
(b) Connect the positive (+) lead from the dry cell bat–teries to terminal 3 through a 3.4 W test bulb and the negative (–) lead to terminal 4.,
(c) Check that the voltage rises between terminals 3 and 4 as the float is moved from the top to bottom position.

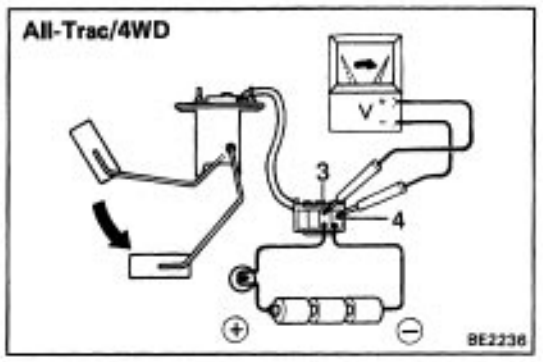

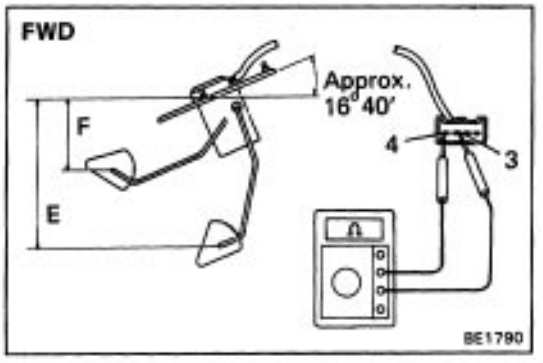

(Resistance)

(d) Measure the resistance between terminals 3 and 4 for each float position.

Float position		mm (in.)	Resistance(Ω)
FWD	F	Approx. 42 (1.65)	Approx. 3
	E	Approx. 138 (5.43)	Approx. 110
All-Trac/4WD	F	Approx. 82 (3.23)	Approx. 3
	E	Approx. 226 (8.90)	Approx. 110

If resistance value is not as specified, replace the receiver gauge.

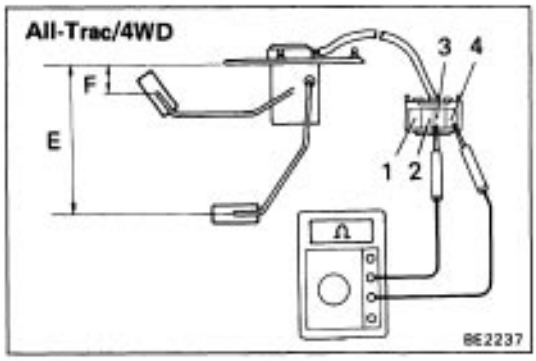

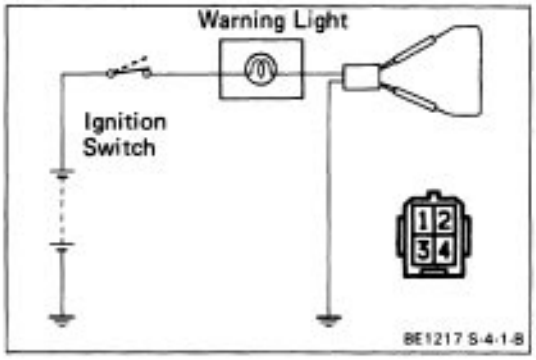

Fuel Level Warning System

(Coupe: w/ 4A–FE Engine)

1. INSPECT WARNING LIGHT

(a) Disconnect the connector from the sender gauge.

(b) Connect terminals 2 and 3 on the wire harness side connector.

(c) Turn the ignition switch ON, check that the warning light lights up.

If the warning light does not light up, test the bulb.

2. INSPECT WARNING* SWITCH

(a) Apply battery voltage between terminals 2 and 3 through a 3.4W test bulb, check that the bulb lights.

HINT: It will take a short time for the bulb to light up.

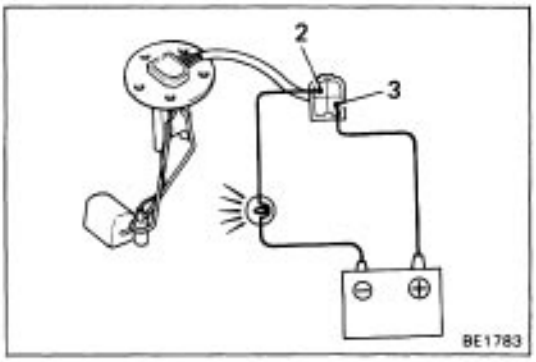

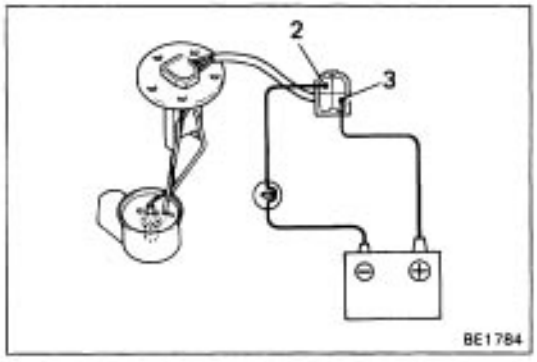

(b) Submerge the switch in fuel. Check that the bulb goes out.

If operation is not as specified, replace the sender gauge.

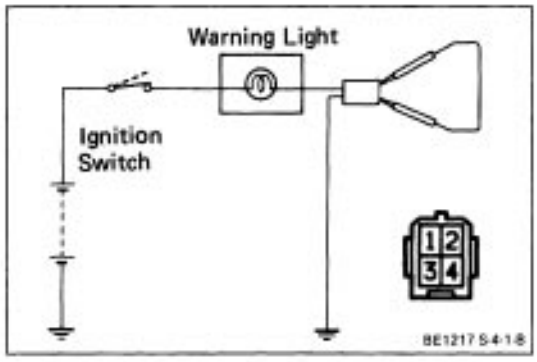

(Coupe: w/ 4A–GE Engine)

1. INSPECT WARNING LIGHT

(a) Disconnect the connector from the sender gauge.

(b) Connect terminals 3 and 4 on the wire harness side connector.

(c) Turn the ignition switch ON, check that the warning light lights up.

If the warning light does not light up, test the bulb.

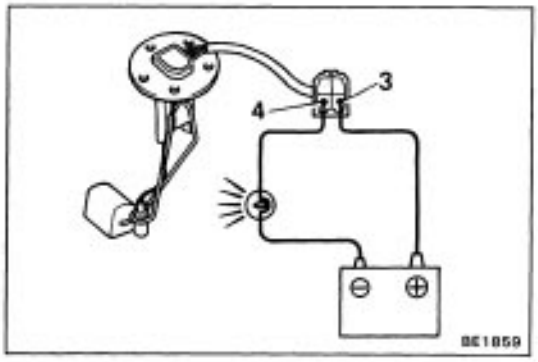

2. INSPECT WARNING SWITCH

(a) Apply battery voltage between terminals 3 and 4 through a 3.4W test bulb, check that the bulb lights.

HINT: It will take a short time for the bulb to light up.

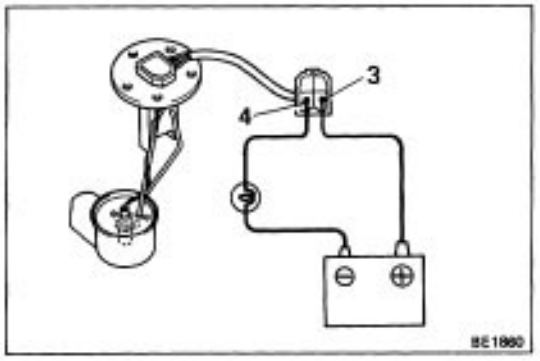

(b) Submerge the switch in fuel. Check that the bulb goes out.

If operation is not as specified, replace the sender gauge.

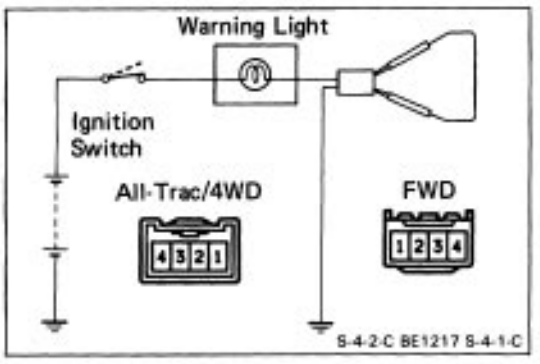

(Sedan and Wagon)

1. INSPECT WARNING LIGHT

(a) Disconnect the connector from the sender gauge.

(b)–1 (FWD)

Connect terminals 2 and 4 on the wire harness side connector.

(b)–2 (All–Trac/4WD)

Connect terminals 1 and 2 on the wire harness side connector.

(c) Turn the ignition switch ON, check that the warning light lights up.

If the warning light does not light up, test the bulb.

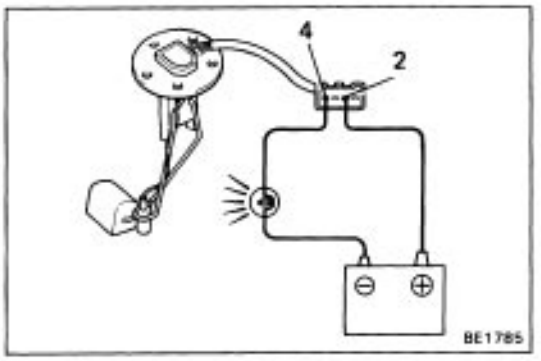

2–1. (FWD)

INSPECT WARNING SWITCH

(a) Apply battery voltage between terminals 2 and 4 through a 3.4W test bulb, check that the bulb lights.

HINT: It will take a short time for the bulb to light up.

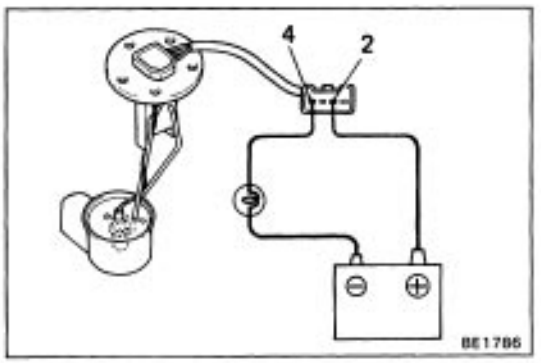

(b) Submerge the switch in fuel. Check that the bulb goes out.

If operation is not as specified, replace the sender gauge.

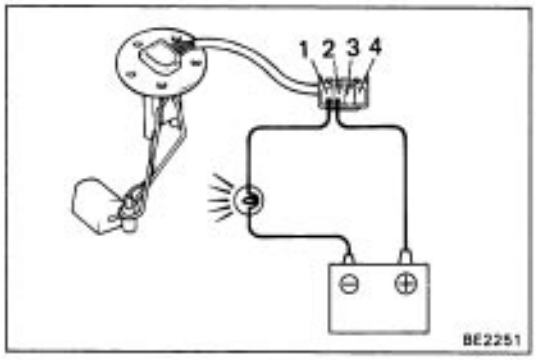

2–2. (All–Trac14WD)
INSPECT WARNING SWITCH

(a) Apply battery voltage between terminals 1 and 2 through a 3.4W test bulb, check that the bulb lights.

HINT: It will take a short time for the bulb to light up.

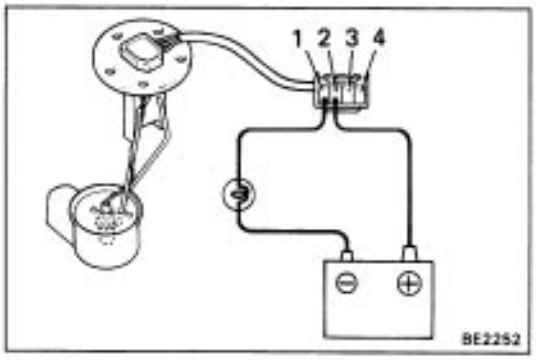

(b) Submerge the switch in fuel. Check that the bulb goes out.

If operation is not as specified, replace the sender gauge.

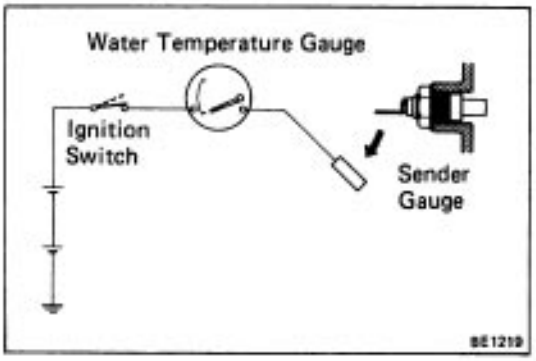

Water Temperature Gauge System

1. INSPECT RECEIVER GAUGE
(Operation)

(a) Disconnect the connector from the sender gauge.

(b) Turn the ignition switch ON, check that the receiver gauge needle indicates COOL.

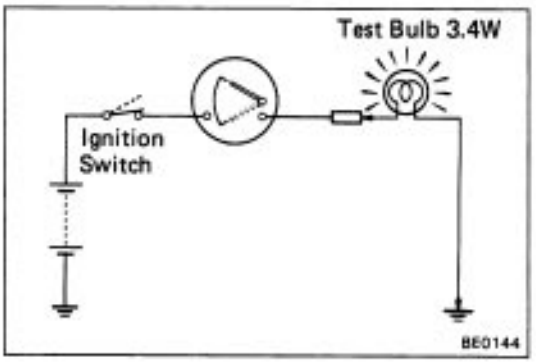

(c) Ground terminal on the wire harness side through a 3.4W test bulb.

(d) Turn the ignition switch ON, check that the bulb lights and the receiver gauge needle moves to the hot side.

If operation is not as specified, measure the receiver gauge resistance.

Between terminals	Resistance (St)	
	Coupe	Sedan and Wagon
A → B	Approx. 55	Approx. 55
A → C	Approx. 135	Approx. 145
B → C	Approx. 210	Approx. 200

(Resistance)

Measure the resistance between terminals.

HINT: Connect the test leads so that the current from the ohmmeter can flow according to the chart order.

If resistance value is not as specified, replace the receiver gauge.

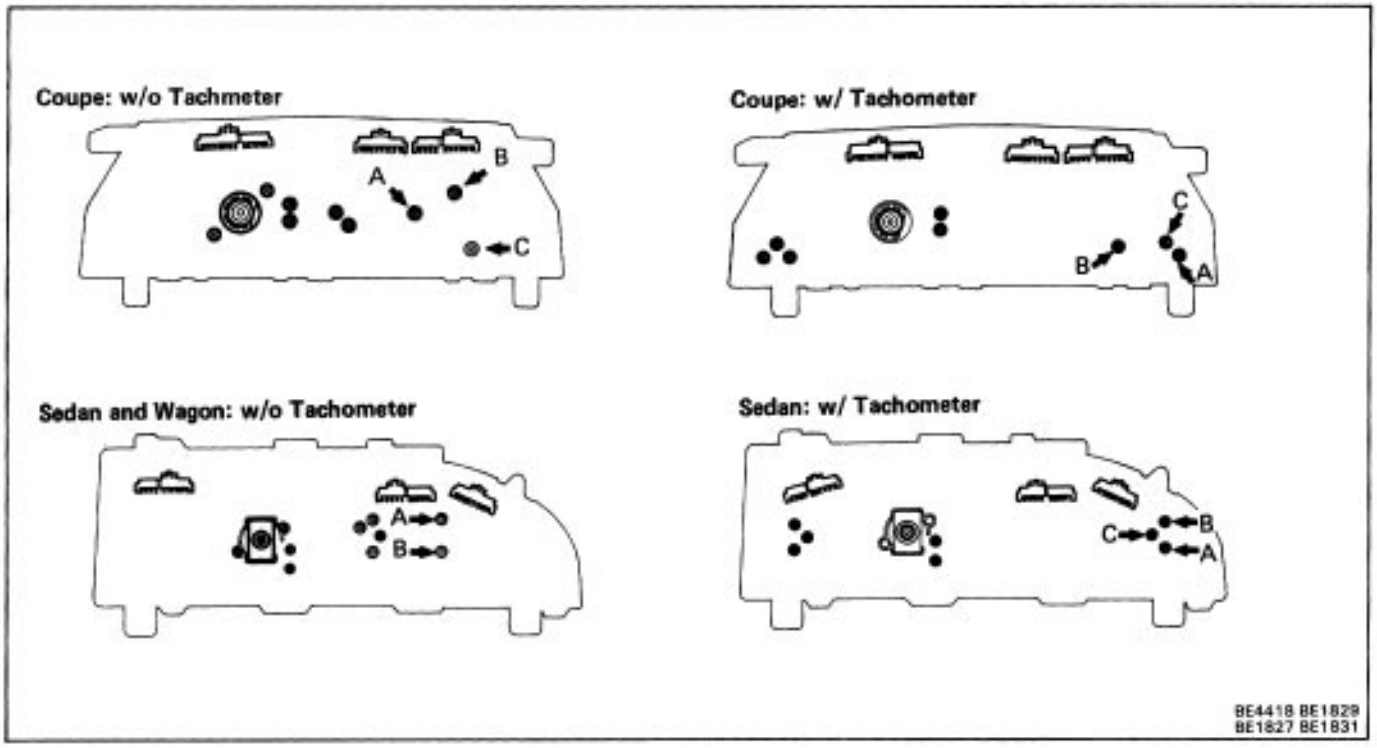

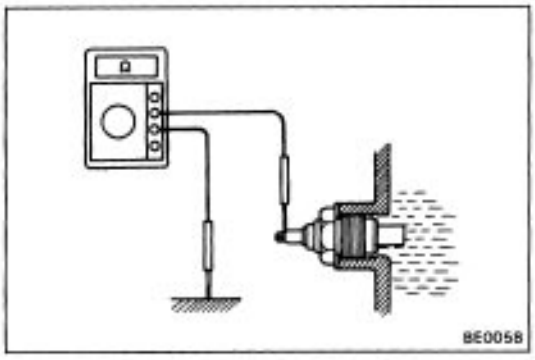

3. INSPECT SENDER GAUGE

Measure the resistance between terminal and gauge body.

Water temperature 0 C (OF)	Resistance (Ω)	
	Yazaki	Nippondenso
50 (122)	–	$226^{+33.6}_{-36.6}$
60 (140)	152.7	–
115 (239)	$26.4^{+2.2}_{-2.6}$	$26.4^{+1.71}_{-2.21}$

If resistance value is not as specified, replace the sender gauge.

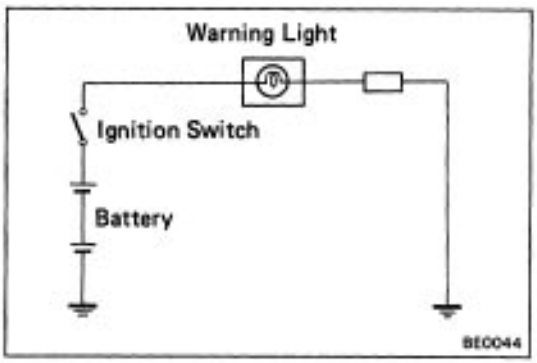

Low Oil Pressure Warning System

1. INSPECT WARNING LIGHT

(a) Disconnect the connector from the warning switch and ground the connector on the wire harness side.

(b). Turn the ignition switch ON, check that the warning light lights.

If the warning light does not light, test the bulb.

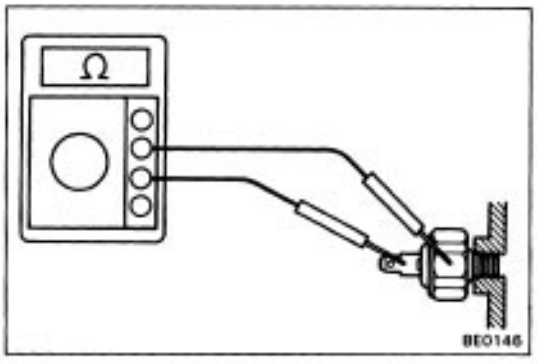

2. INSPECT SWITCH

(a) Disconnect the connector from the switch.

(b) Check that there is continuity between the terminal and ground with the engine stopped.

(c) Check that there is no continuity between the terminal and ground with the engine running.

HINT: Oil pressure should be over 0.3 kg/cm (4.3 psi, 29 kPa).

If operation is not as specified, replace the switch.

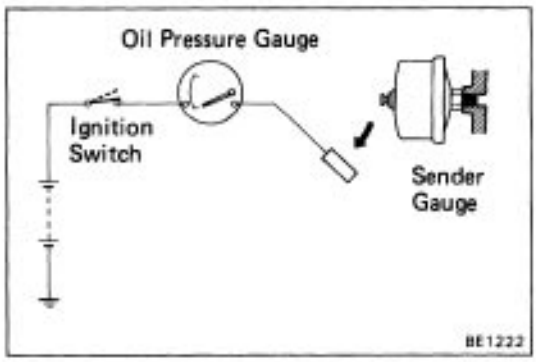

Oil Pressure Gauge System

1. INSPECT RECEIVER GAUGE

(Operation)

(a) Disconnect the connector from the sender gauge.

(b) Turn the ignition switch ON, check that the receiver gauge needle indicates LOW.

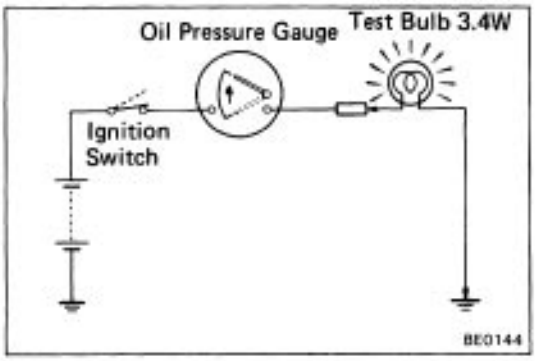

(c) Ground terminal on the wire harness side through a 3.4W test bulb.

(d) Turn the ignition switch ON, check that the bulb lights up and the receiver gauge needle moves to the high side.

If operation is not as specified, measure the receiver gauge resistance.

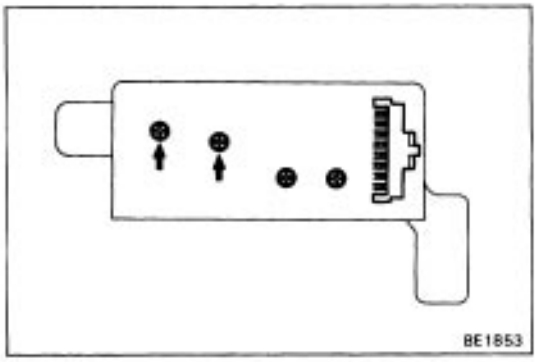

(Resistance)

Measure the receiver gauge resistance between terminals.

Resistance: Approx. 44Ω

If resistance value is not as specified, replace the receiver gauge.

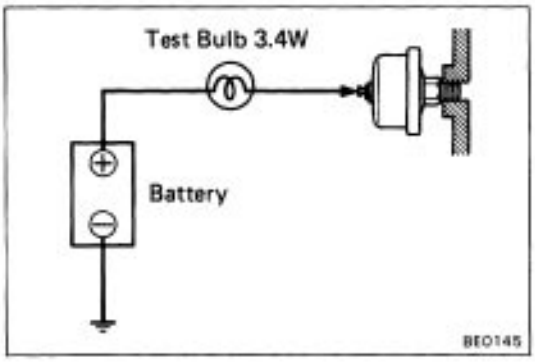

2. INSPECT SENDER GAUGE

(a) Disconnect the connector from the sender gauge.

(b) Apply battery voltage to the sender gauge terminal through a 3.4 W test bulb.

(c) Check that the bulb does not light when the engine is stopped.

(d) Check that the bulb flashes when the engine is running. The number of flashes should vary with engine speed.

If operation is not as specified, replace the sender gauge.

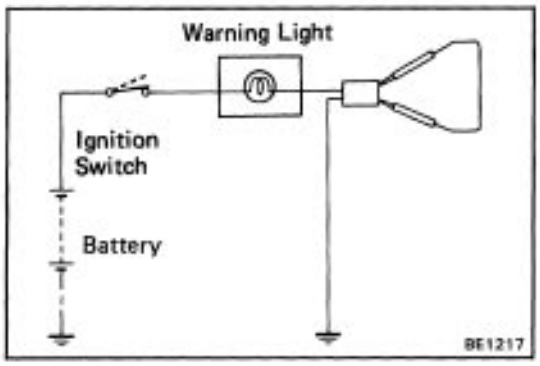

Brake Warning System

1. INSPECT WARNING LIGHT

(a) Disconnect the connectors from the level warning switch and parking brake switch.

(b) Connect terminals on the wire harness side of the level warning switch connector.

(c) Remove the CHARGE fuse and turn the ignition switch ON, check that the warning light light up.

If the warning light does not light, test the bulb.

2. INSPECT SWITCHES

(Brake Fluid Level Warning Switch)

(a) Check that there is no continuity between terminals with the switch OFF (float up).

(b) Check that there is continuity between terminals with the switch ON (float down).

If operation is not as specified, replace the switch.

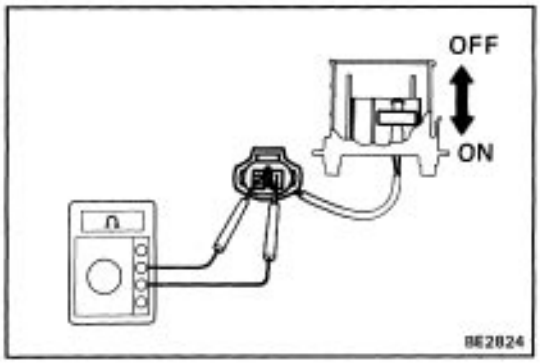

(Parking Brake Switch)

(a) Check that there is continuity between terminal and the switch set nut with the switch pin released (parking brake lever pulled up).

(b) Check that there is no continuity between terminal and the switch set nut with the switch pin pushed in

(parking brake lever released).

If operation is not as specified, replace the switch.

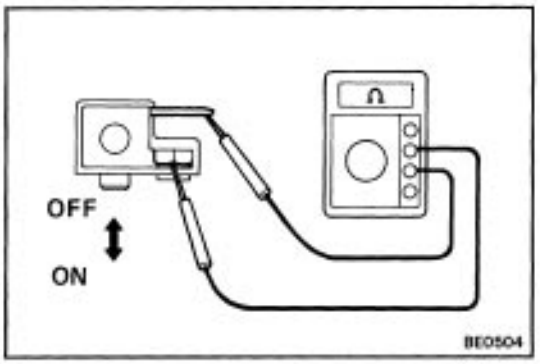

Seat Belt Warning System

1. INSPECT WARNING LIGHT

(a) Ground terminal 2 of the integration relay with the wire harness connected.

(b) Turn the ignition switch ON, check that the warning light lights up.

If the warning light does not light, test the bulb.

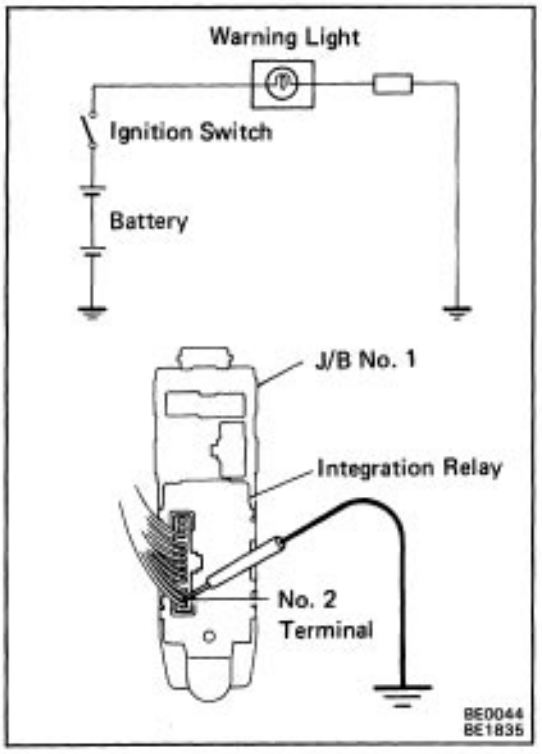

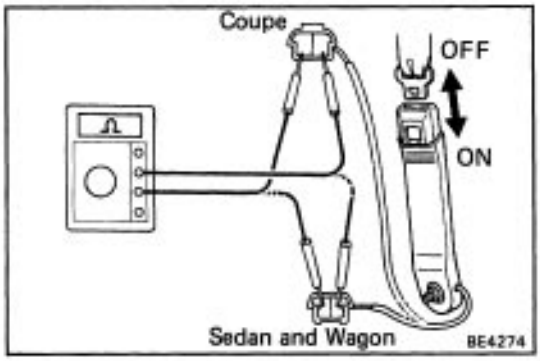

2. INSPECT BUCKLE SWITCH

(a) Check that there is no continuity between terminals on the switch side connector with the belt fastened.

(b) Check that there is no continuity between terminals on the switch side connector with the belt unfastened.

If operation is not as specified, replace the seat belt inner.

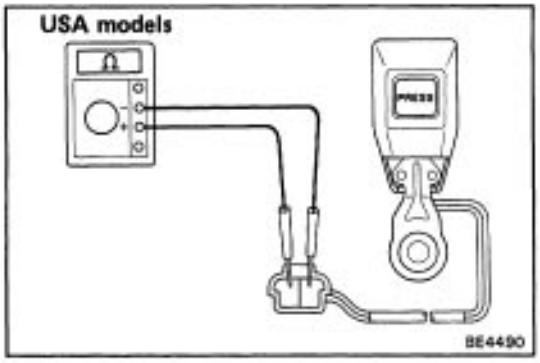

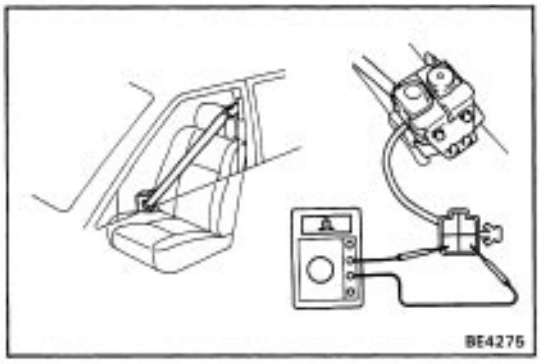

3. (USA models)

INSPECT RETEACTOR SWITCH

(a) Check that there is no continuity between terminals with the seat belt fastened to the shoulder buckle.

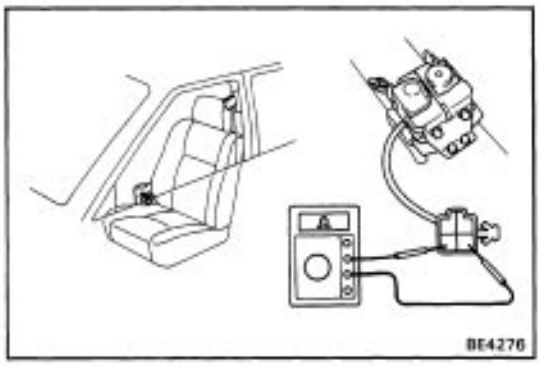

(b) Check that there is continuity between terminals after releasing the seat belt.

4. INSPECT KEY UNLOCK WARNING SWITCH

See Ignition Switch and Key Unlock Warning Switch on page BE–15.

5. INSPECT COURTESY SWITCH (Drive's Door)

See Open Door Warning System on page BE–60.

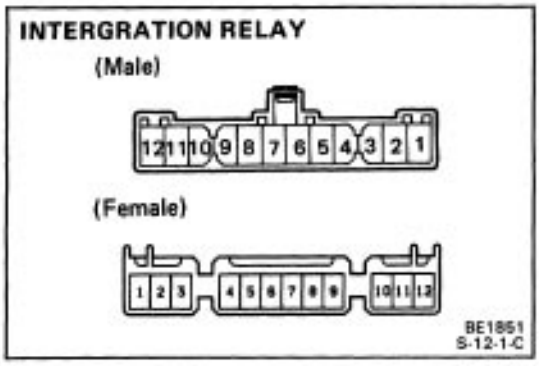

6. INSPECT INTEGRATION RELAY

(Continuity)

Check that there is continuity between the same number terminals of the male connector and female connector of the relay.

If continuity is not as specified, replace the relay.

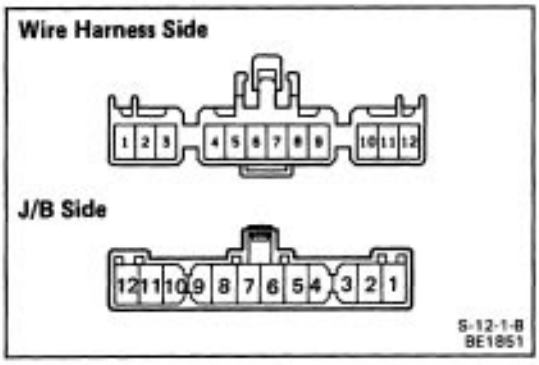

(Relay Circuit)

Disconnect the connectors from the relay and inspect the connectors on the wire harness side and JIB side as shown in the chart.

(Junction Block Side)

Check for	Tester connection	Condition		Specified value
Continuity	7 – Ground	Constant		Battery voltage
	8 – Ground	Driver's door position	Closed (Courtesy switch OFF)	No contunuity
			Opened (Courtesy switch ON)	Continuity
	12 – Ground	Passenger or rear door	Closed (Courtesy switch OFF)	No continuity
			Opened (Courtesy switch ON)	Continuity
Voltage	1 – Ground	Ignition switch position	LOCK	No voltage
			Except LOCK	Battery voltage
	3 – Ground	Constant		Battery voltage
	9 – Ground	Ignition switch position	LOCK or ACC	No voltage
			ON	Battery voltage
	11 – Ground	Light control switch position	OFF or HOLD	No voltage
			TAIL or HEAD	Battery voltage

(Wire Harness Side)

Check for	–Tester connection	Condition		Specified value
Continuity	2 – 9	Constant		*Continuity
	3 – 12	Constant		*Continuity
	4 – Ground	Key unlock warning switch position	OFF (Ignition key removed)	No continuity
			ON (Ignition key set)	Continuity
	5 – Ground	Seat belt position	Unfastened (Buckle switch OFF)	No continuity
			Fastened (Buckle switch ON)	Continuity
	7 – Ground	Constant		Continuity

*There is resistance in the circuit due to the bulb.

If circuit is as specified, replace the relay.

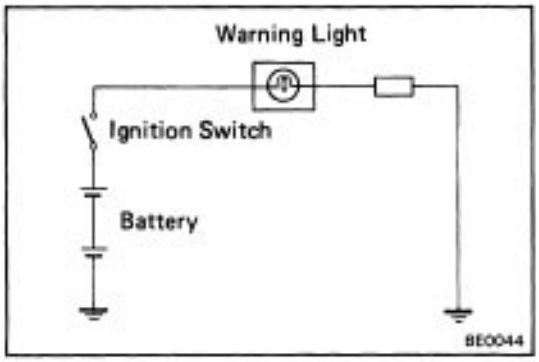

Open Door Warning System

1. INSPECT WARNING LIGHT

(a) Disconnect the connector from the door courtesy switch and ground it.

(b) Turn the ignition switch ON, check that the warning light lights up.

If the warning light does not light up, test the bulb.

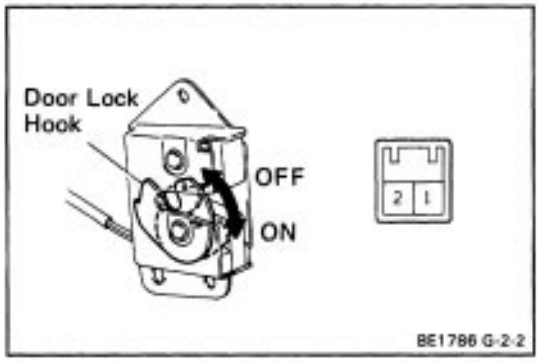

2. INSPECT COURTEST SWITCH

(Wagon: Back Door)

(a) Check that there is continuity between terminals with the door lock hook in the unlock position.
(door opened)

(b) Check that there is no continuity between terminals with the door lock hook in the lock position.
(door closed)

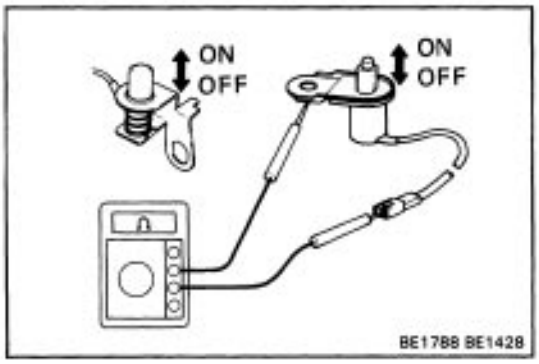

(Others)

(a) Check that there is continuity between terminal and switch body when the switch pin is pushed.
(door opened)

(b) Check that there is no continuity between terminal and switch body when the switch pin is pushed.
(door closed)

If operation is not as specified, replace the switch.

Meter Illumination Control System

INSPECT LIGHT CONTROL RHEOSTAT

(Coupe)

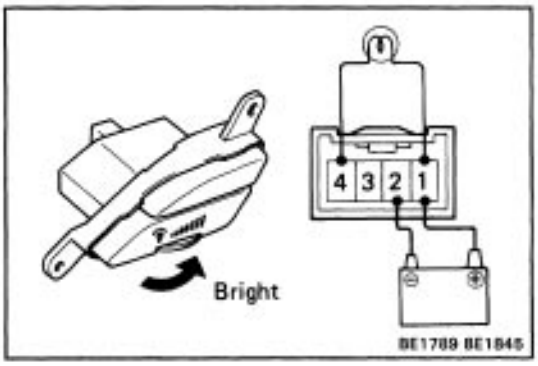

(a) Connect the positive (+) lead from the battery to terminal 1 and the negative (–) lead to terminal 2.

(b) Connect terminals 1 and 4 through a 3.4W test bulb.

(c) Gradually turn the rheostat knob from dark side to bright side, check that the test bulb brightness changes from dark to bright.

If operation is not as specified, replace the rheostat.

(Sedan and Wagon)

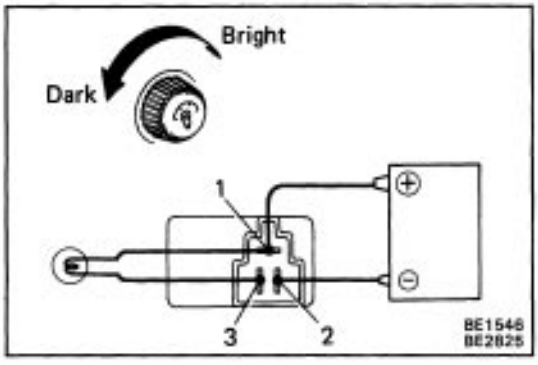

(a) Connect the positive (+) lead from the battery to terminal 1 and the negative (–) lead to terminal 2.

(b) Connect terminals 1 and 3 through a 3.4 W test bulb.

(c) Gradually turn the rheostat knob from the bright side to dark side, check that the test bulb brightness changes from bright to dark.

If operation is not as specified, replace the rheostat.

DEFOGGER SYSTEM
Troubleshooting

Problem	Possible cause	Remedy	Page
Rear window defogger does not operate	Circuit breaker OFF	Reset breaker and check for short	BE–3
	GAUGE fuse blown	Replace fuse and check for short	BE–3
	Defogger switch faulty	Check switch	BE–61
	Defogger relay faulty	Check relay	BE–61
	Defogger wire broken	Check wires	BE–61
	Wiring and ground faulty	Repair as necessary	

Rear Window Defogger Engine Idle–Up System Inspection

(4A–GE Engine)

CHECK THAT ENGINE IDLE INCREASES

Push in the defogger switch, check that the engine revolutions increase.

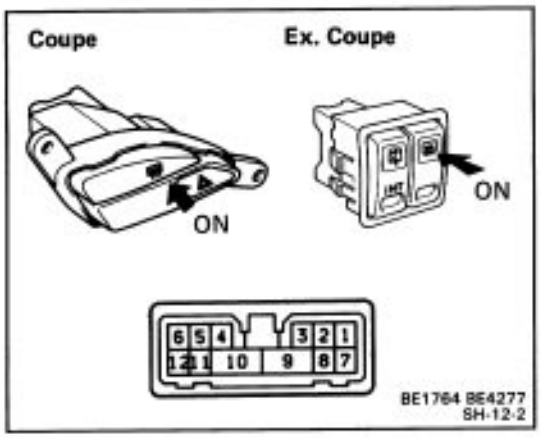

Parts Inspection
Rear Window Defogger System

1. INSPECT SWITCH

(Continuity)

Terminal / Switch position	9	10	Illumination 11	Illumination 12
OFF				
ON	○	○		

If continuity is not as specified, replace the switch.

2. INSPECT REAR WINDOW DEFOGGER RELAY

See Taillight Control Relay on page BE–25.

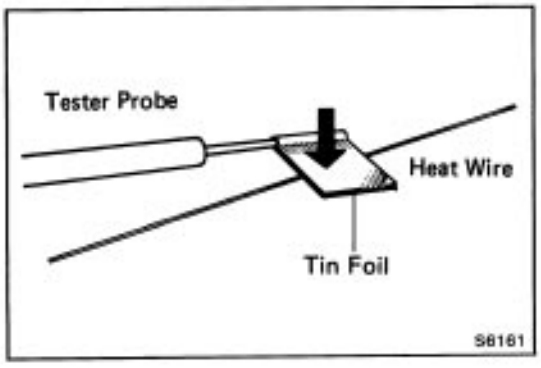

3. INSPECT DEFOGGER WIRES

NOTICE:

- **When cleaning the glass, use a soft, dry cloth, and wipe the glass in the direction of the wire. Take care not to damage the wires.**
- **Do not use detergents or glass cleaners with abrasive ingredients.**
- **When measuring voltage, wind a piece of tin foil around the top of the negative probe and press the foil against the wire with your finger as shown.**

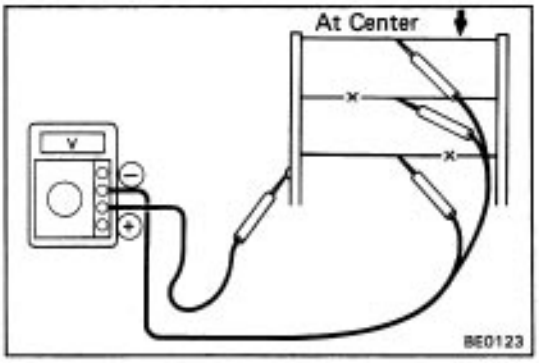

(Wire Breakage)

(a) Turn the ignition switch ON.
(b) Push in the defogger switch.
(c) Inspect the voltage at the center of each heat wire as shown.

Voltage	Criteria
Approx. 5V	Okay (No break in wire)
Approx. 10V or 0V	Broken wire

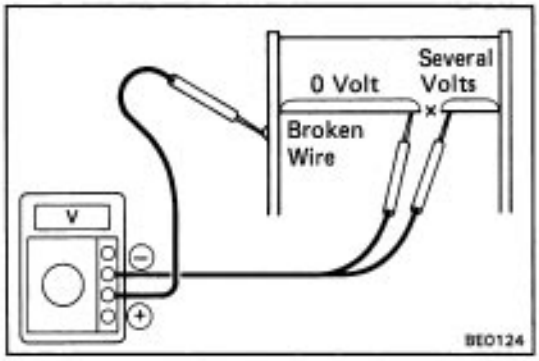

HINT: If there is 10V, the wire is broken between the center of the wire and positive (+) end. If there is no voltage, the wire is broken between the center of the wire and ground.

(Wire Breakage Point)

(a) Place the voltmeter positive (+) lead against the defogger positive (+) terminal.
(b) Place the voltmeter negative (–) lead with the foil strip against the heat wire at the positive (+) terminal end and slide it toward the negative (–) terminal end.
(c) The point where the voltmeter deflects from zero to several volts is the place where the heat wire is broken.

HINT: If the heat wire is not broken, the voltmeter indicates OV at the positive (+) end of the heat wire but gradually increases to about 12V as the meter probe is moved to the other end.

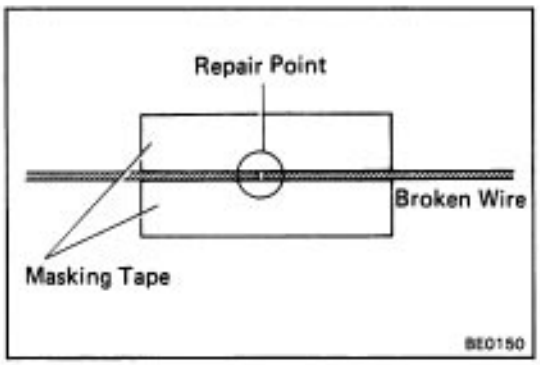

4. REPAIR DEFOGGER WIRES

(a) Clean the broken wire tips with a grease, wax and silicone remover.
(b) Place the masking tape along both sides of the wire to be repaired.

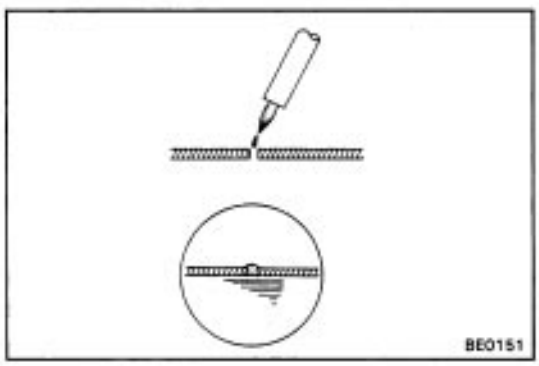

(c) Thoroughly mix the repair agent (Dupont paste No. 4817).
(d) Using a fine tip brush, apply a small amount to the wire.
(e) After a few minutes, remove the masking tape.
M Allow the repair to stand at least 24 hours.

HEATER
Troubleshooting

Problem	Possible cause	Remedy	Page
Blower does not work when fan switch is on	Circuit breaker OFF HEATER fuse blown Heater relay faulty Heater blower switch faulty Heater blower resistor faulty Heater blower motor faulty wiring or ground faulty	Reset breaker and check for short Replace fuse and check for short Check relay Check switch Check resistor Check motor Repair as necessary	BE–3 BE–3 BE–65 BE–65 BE–65 BE–65
Incorrect temperature output	Control cables broken or adjustment faulty Heater– hoses leaking or clogged Water valve faulty Air dampers broken Air ducts clogged Heater radiator leaking or clogged Heater control unit faulty	Check cables Replace hose Replace valve Repair dampers Repair ducts Replace radiator Repair control unit	BE–64

Damper Positions

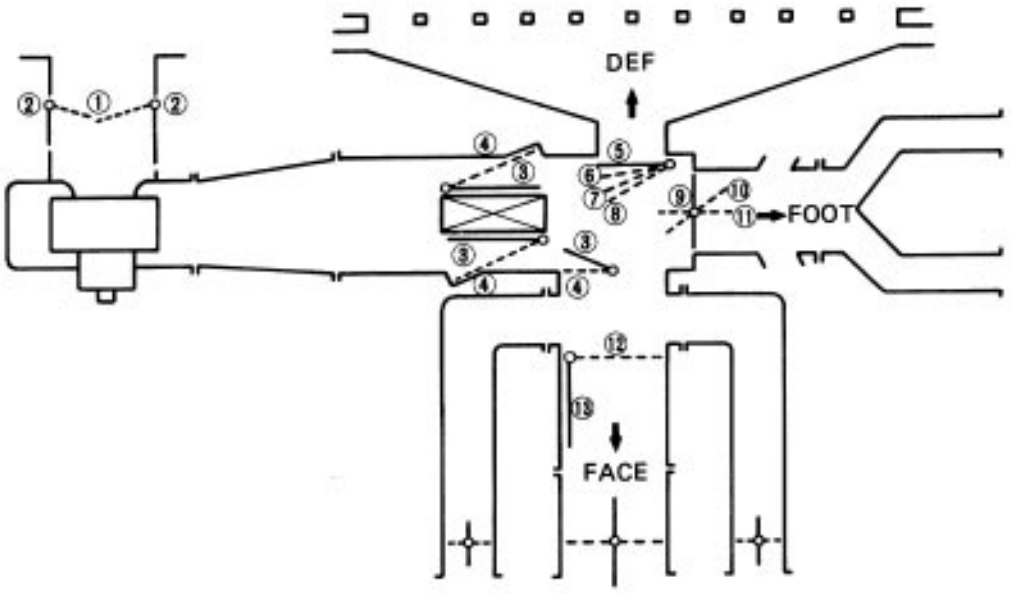

BE2105

Damper	Air Inlet		Air Mix		Mode Selector				
	RECIRC	FRESH	COOL	WARM	FACE	FACE / FOOT	FOOT	FOOT / DEF	DEF
Dampers Position	①	②	③	④	⑤ ⑨ ⑬	⑤ ⑩ ⑬	⑥ ⑪ ⑫	⑦ ⑲ ⑫	⑧ ⑨ ⑫

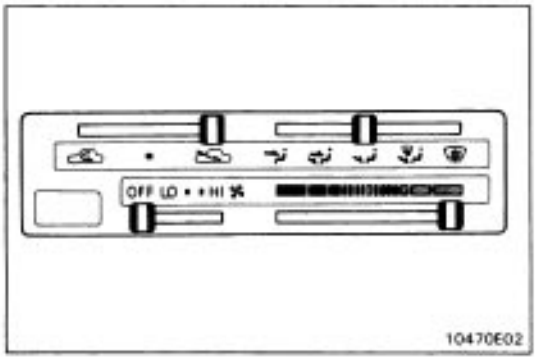

Inspection and Adjustment

HEATER CONTROL

(Inspect Heater Control Cable Operation)

Move the control levers left and right and check for stiffness and binding through the full range of the levers.

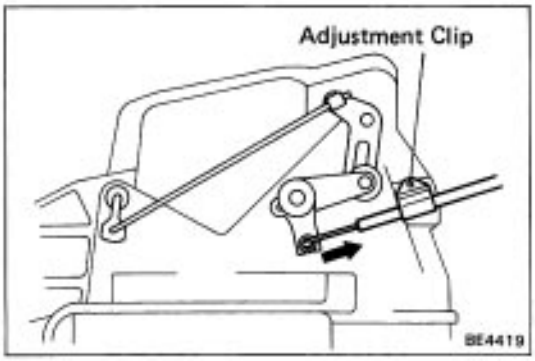

(Set Air Inlet Damper)

Set the air inlet damper and control lever to ”RECIRC”.

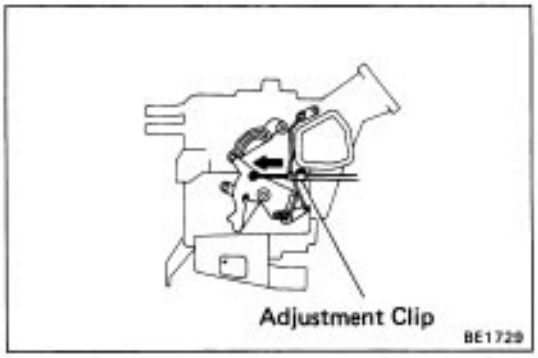

(Set Mode Selector Damper)

Set the mode selector damper and control lever to ”FACE”.

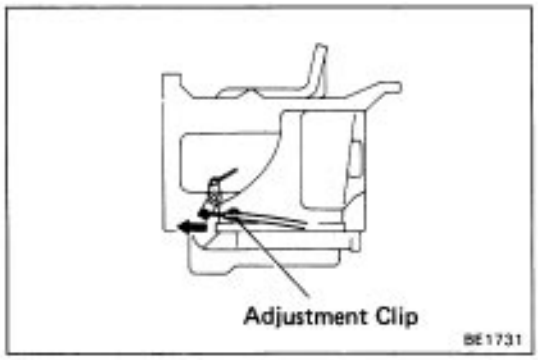

(Set Air Mix Damper)

Set the air mix damper and control lever to ”COOL”.

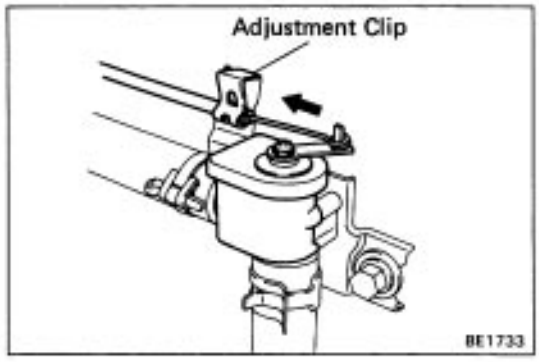

(Set water Valve)

Set the water valve and control lever to ”COOL”.
HINT: Place the water valve lever on ”COOL” and while pushing the outer cable in the ”COOL” direction, clamp the outer cable to the water valve bracket.

Parts Inspection

1. INSPECT HEATER BLOWER SWITCH (Continuity)

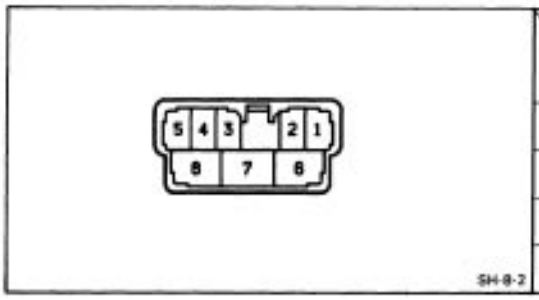

Terminal / Condition	1	2	5	6	8
LO			○——	——○	
•	○——	——	——	——○	
●		○——	——	——○	
HI			○——	——	——○

If continuity is not as specified, replace the switch.

2. INSPECT HEATER BLOWER RESISTOR (Continuity)

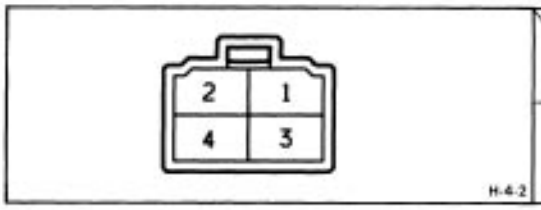

Terminal / Condition	1	2	4	3
Constant	○—∿∿—○—∿∿—○—∿∿—○			

If continuity is not as specified, replace the resistor.

3. INSPECT HEATER MAIN RELAY (Continuity)

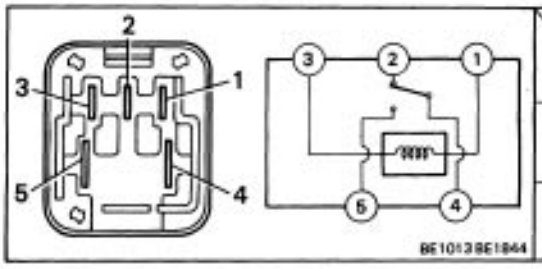

Terminal / Condition	1	2	3	4	5
Constant	○—∿∿—	—○	—○		
		○——	——	——○	
Apply battery voltage to terminals 1 and 3.				○——	——○

If continuity is not as specified, replace the relay.

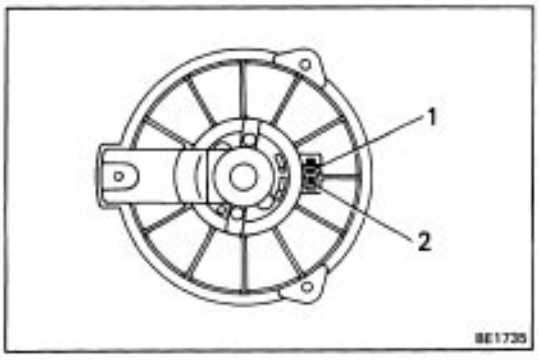

4. INSPECT HEATER BLOWER MOTOR

Connect the positive (+) lead from the battery to terminal 1 and the negative (–) lead to terminal 2, check that the motor operation is smooth.

If operation is not as specified, replace the motor.

POWER MIRROR CONTROL SYSTEM
Wiring and Connector Diagrams

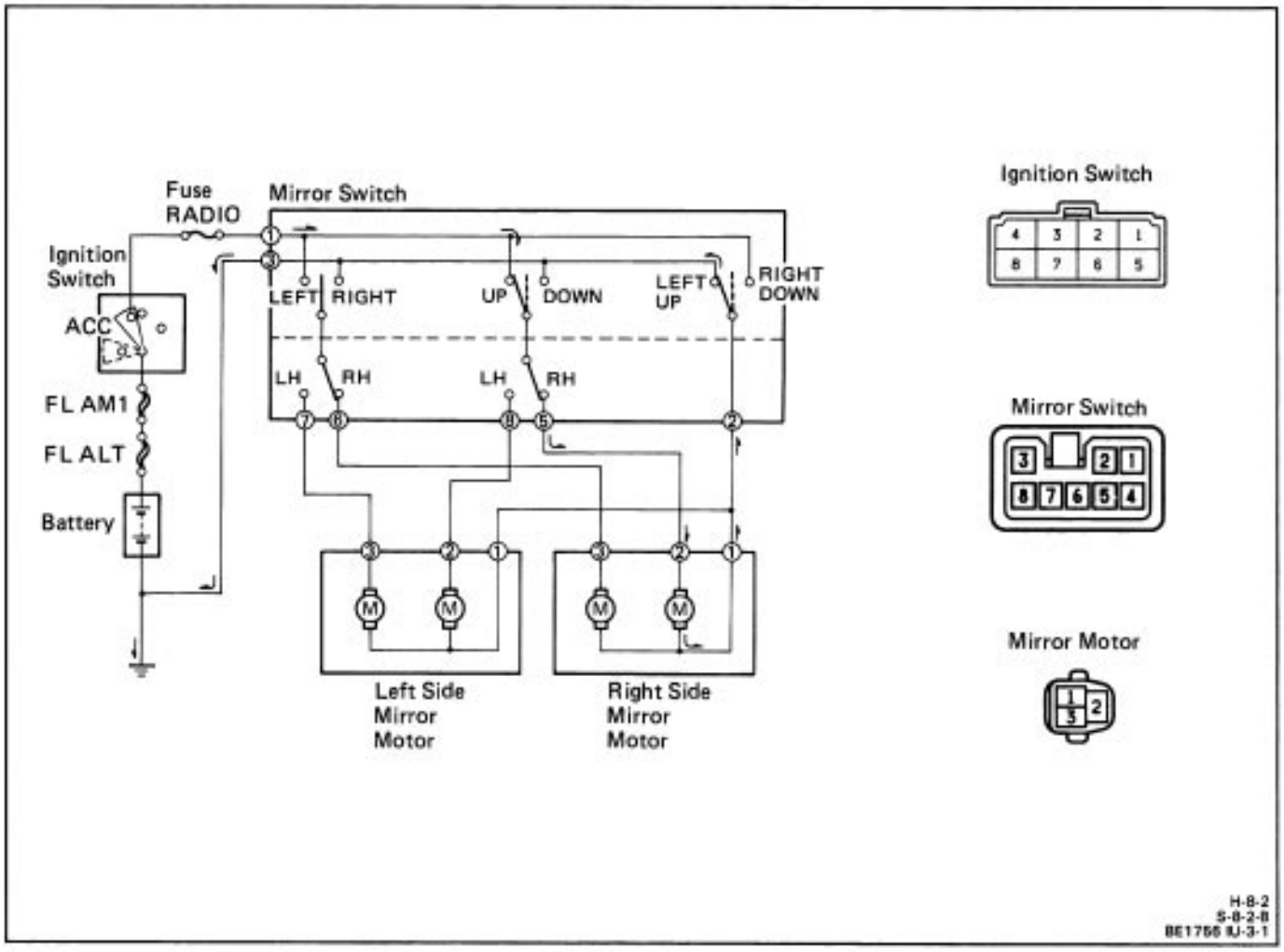

Parts Inspection

1. INSPECT MIRROR SWITCH
(Continuity)

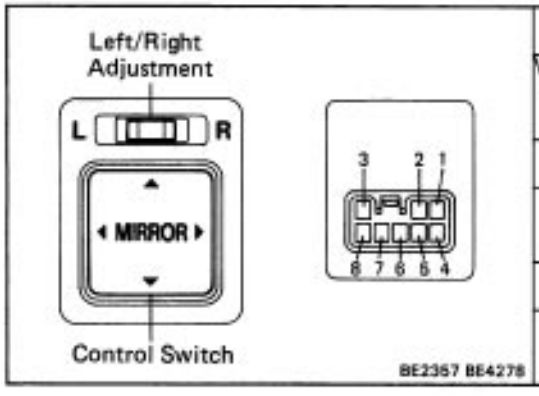

Mirror	Left				Right				
Terminal / Switch position	8	7	1	3	2	3	1	5	6
UP		○	○	○	○	○	○	○	
DOWN		○	○		○	○	○		
LEFT	○		○	○	○	○	○		○
RIGHT	○		○		○	○			○

If continuity is not as specified, replace the switch.

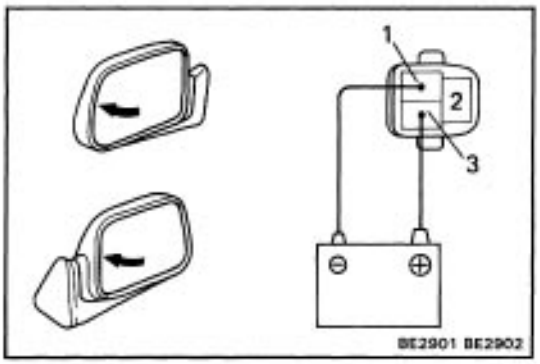

2. INSPECT MIRROR MOTOR

(a) Connect the positive (+) lead from the battery to terminal 3 and the negative (–) lead to terminal 1, check that the mirror turns to left side.

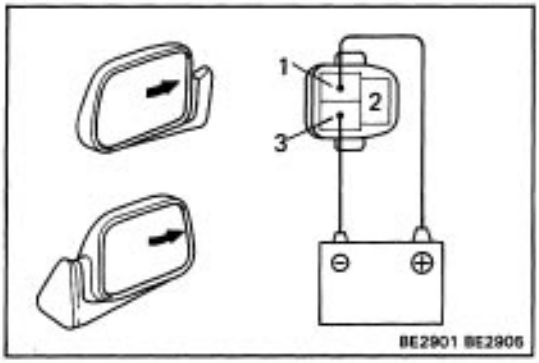

(b) Reverse the polarity, check that the mirror turns to right side.

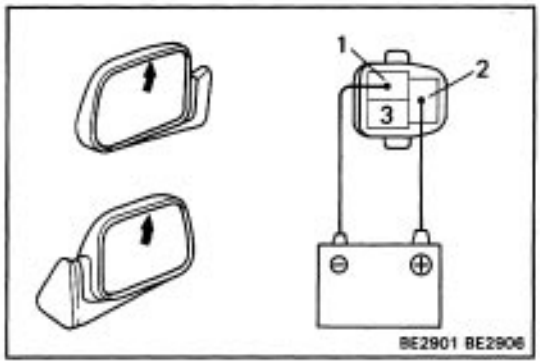

(c) Connect the positive (+) lead from the battery to terminal 2 and the negative (–) lead to terminal 1, check that the mirror turns upward.

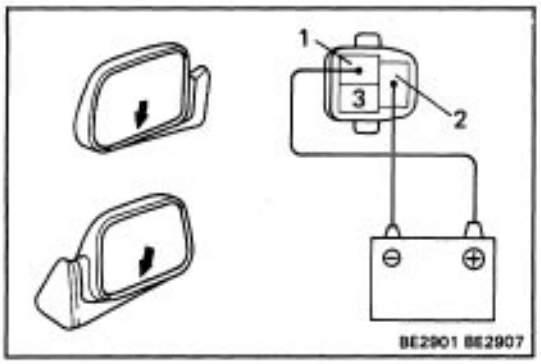

(d) Reverse the polarity, check that the mirror turns downward.

If operation is not as specified, replace the mirror assembly.

POWER WINDOW CONTROL SYSTEM
System Description

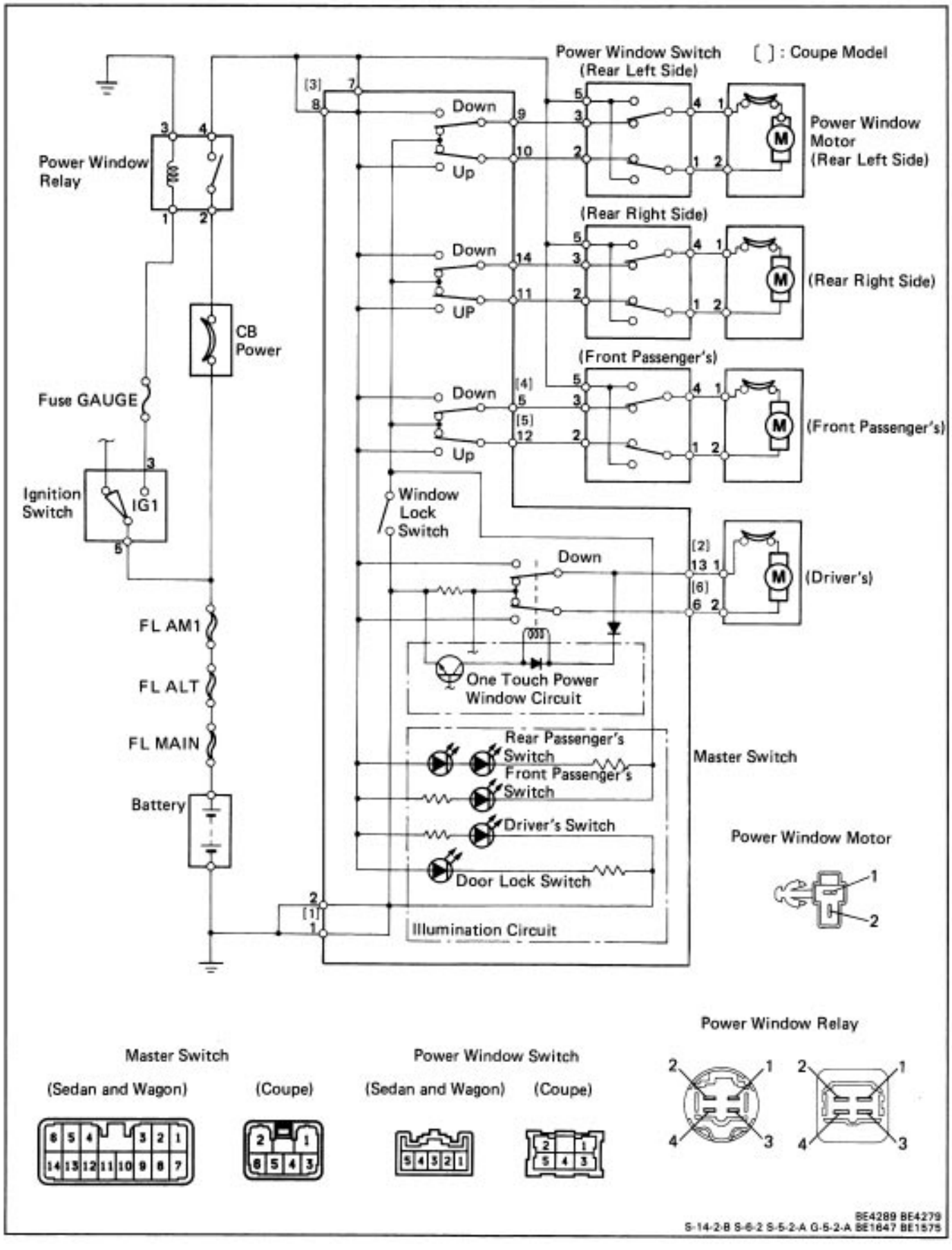

When ignition switch is on, the main relay operates so that the current flows from the battery to Terminal 7 or 8 (3) of the master switch.
Operation examples of each switch are shown below.

1. MANUAL UP operation for the driver's side window

When the switch on the "MANUAL" side of the master switch is pushed, current flows through Terminal 7 or 8 (3) → Terminal 6 (6) of the master switch.
Then, current flows through Terminal 7 or 8 (3) → Terminal 13 (2) of the power window motor → Terminal 6 (6) → the body ground, and the motor starts to run in order to raise the window.
When the switch button is released while the window is rising, current is shut off, so that the window stops at the position.
(For the MANUAL DOWN operation, current flows in the reverse direction because the terminals where it flows are changed.)

2. AUTO DOWN operation for the driver's side window

Once the "AUTO DOWN" button of the master switch is pushed, current flows through Terminal 7 or 8 (3) → Terminal 6 (6) of the master switch.
Then, current flows through Terminal 13 (2) of the master switch → ,Terminal 1 → Terminal 2 of the power window motor → Terminal 6 (6) of the master switch → the body ground, and the motor starts to run in order to lower the window.
When the window is fully down, current to the motor is shut off.
When the switch on the "MANUAL UP" side is pushed once while the window is dropping, current flows to the Terminal 6 (6) of the power window switch in order to make the switch shut off current to the motor, so that the window stops at the position.

3. UP operation for the rear RH side window with the master switch

When the switch on the "UP" side of the master switch is pushed, current flows through Terminal 7 or 8 → Terminal 11 of the master switch → Terminal 2 → .Terminal 1 of the door switch → Terminal 2 → Terminal 1 of the power window motor → Terminal 4 → Terminal 3 of the door switch → Terminal 14 → Terminal 1 or 2 of master switch → the body ground, and the motor starts to run in order to raise the window.
When the switch button is released while the window is rising, current is shut off, so that the window stops at the position.
When the window lock switch of the master switch is set to the LOCK position, the ground circuit is open so that the window cannot be moved.
(For the DOWN operation, the current flows in the reverse direction because the terminals where is flows are changed. Operations for other door windows are the same as above.

4. UP operation for the rear LH side window with the door switch

When the switch on the "UP" side of the door switch is pushed, current flows through Terminal 5 → Terminal 1 of the door switch → Terminal 2 → Terminal 1 of the power window motor → Terminal 4 of the door switch → Terminal 9 → .Terminal 1 or 2 → the body ground, and the motor starts to run in order to raise the window.
When the switch button is released while the window is rising, current is shut off, so that the window stops at the position.
When the window lock switch of the master switch is set of the LOCK position, the ground circuit is open so that the window cannot be moved.
(For the DOWN operation, current flows in the reverse direction because the terminals where it flows are changed. Operations for other door windows are the same as above.)

System Inspection

(See page BE–4 for How to Inspect)

(1) First, select the applicable item in the Trouble column of the trouble chart, then look at the applicable codes in the **Check order** column.
(2) Using the inspection chart, inspect the first item shown in the **Check order** column.
(3)–1 If the inspection result is good, check the next item. If there are no further codes, advance to step (4).
(3)–2 If the inspection result is no good, inspect the item in the **Possible cause** column in the inspection chart. After inspecting, check the system operation again. If the result is still no good, inspect the next item.
(4) If all inspection items are good, inspect the applicable item in the **Possible cause** column in the trouble chart.

[Trouble Chart]

Trouble	Check order	Possible cause
All windows do not operate	J →	Power source circuit faulty
Driver's window does not operate	A → B → C → D → E → F → G → H → I →	Motor circuit faulty
Driver's window does not operate upward	C → F → G →	
Driver's window does not operate downward	D → H → I →	
Driver's window does not operate auto downward	E →	Power window relay faulty
Passenger's window does not operate	K → L → M → N →	Door switch circuit faulty Motor circuit faulty
Rear left window does not operate	O → P → Q → R →	
Rear right window does not operate	S → T → U → V →	

[Parts Location and Connector Diagram]

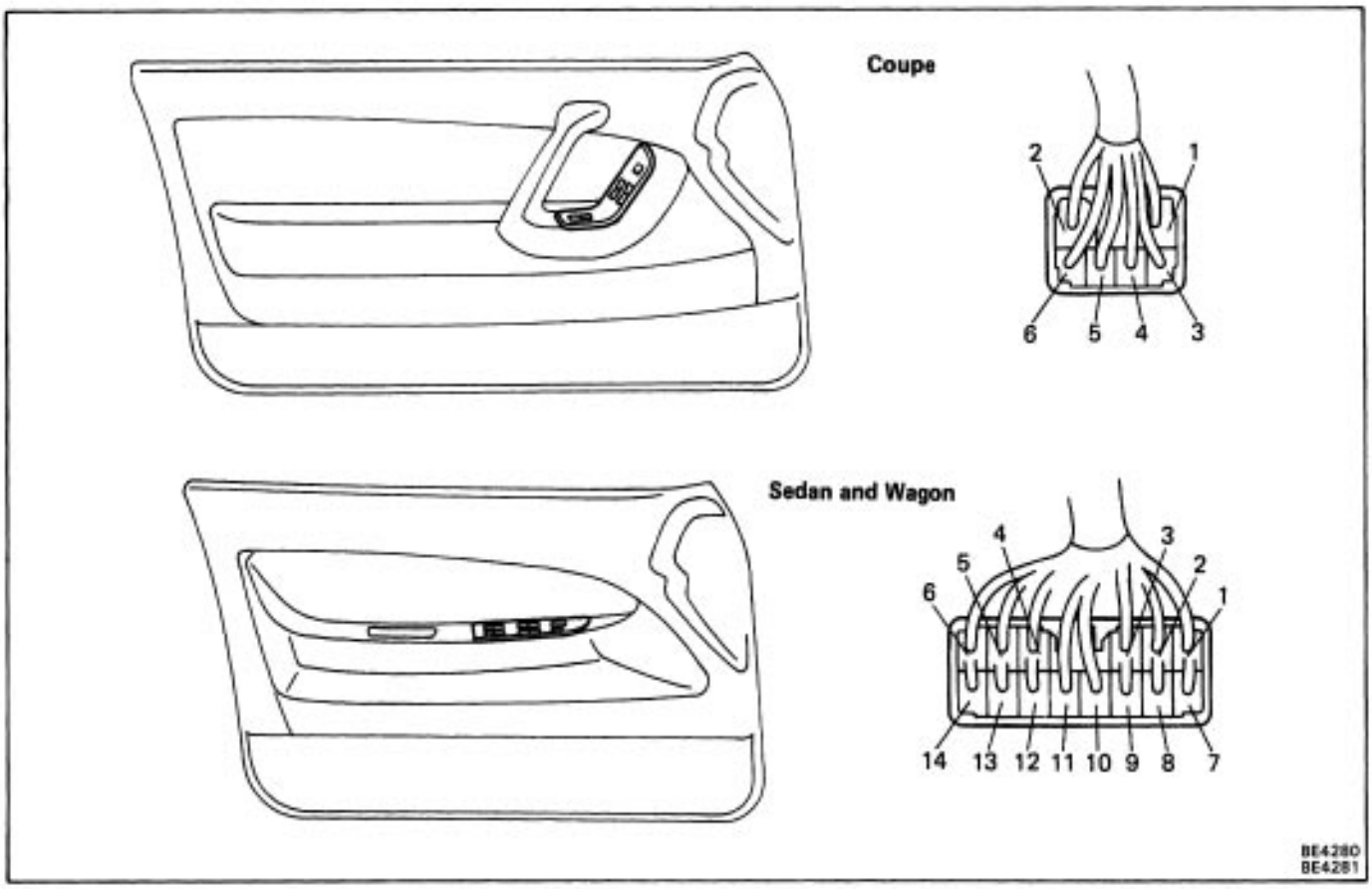

[Inspection Chart]

(Terminals of Power Window Switch)

Code	Connection	Check condition	Specified value	Possible cause
A	7 or 8 (3) — Ground	Ignition switch ON	Battery voltage	Terminal 7 or 8 (3) circuit faulty
B	10 or 2 (1) — Ground	———	Continuity	Terminal 10 or 2 (1) circuit faulty, Body ground circuit faulty
C	6 (6) — Ground	Push "UP" on the manual switch	Battery voltage	Master switch, Terminal 6 (6) circuit faulty
D	13 (2) — Ground	Push "DOWN" on the manual switch	Battery voltage	Master switch, Terminal 13 (2) circuit faulty
E	6 (6) — Ground	Push "DOWN" on the auto switch	Battery voltage	Master switch, Terminal 6 (6) circuit faulty
F	6 (6) — Ground	Push "UP" on the manual	Battery voltage	Master switch faulty
G	13 (2) — Ground	Push "UP" on the manual	Moves upward	
H	13 (2) — Ground	Push "DOWN" on the manual or auto switch	Battery voltage	
I	6 (6) — Ground	Push "DOWN" on the manual or auto switch	Moves downward	
J	7 or 8 (3) — Ground	Ignition switch ON	Battery voltage	Master switch, Each door switch, Body ground faulty
K	12 (5) — Ground	Push "UP" on the master switch (Passenger's)	Battery voltage	Master switch faulty
L	5 (4) — Ground	Push "DOWN" on the master switch (Passenger's)	Battery voltage	
M	5 (4) — Ground	———	Continuity	
N	12 (5) — Ground	———	Continuity	
O	10 — Ground	Push "UP" on the master switch (Rear Left)	Battery voltage	
P	9 — Ground	Push "DOWN" on the master switch (Rear Left)	Battery voltage	
Q	9 — Ground	———	Continuity	
R	10 — Ground	———	Continuity	
S	11 — Ground	Push "UP" on the master switch (Rear Right)	Battery voltage	
T	14 — Ground	Push "DOWN" on the master (Rear Right)	Battery voltage	
U	14 — Ground	———	Continuity	
V	11 — Ground	———	Continuity	

( ): Coupe models

Parts Inspection

1. INSPECT SWITCHES (Master Switch/Continuity)

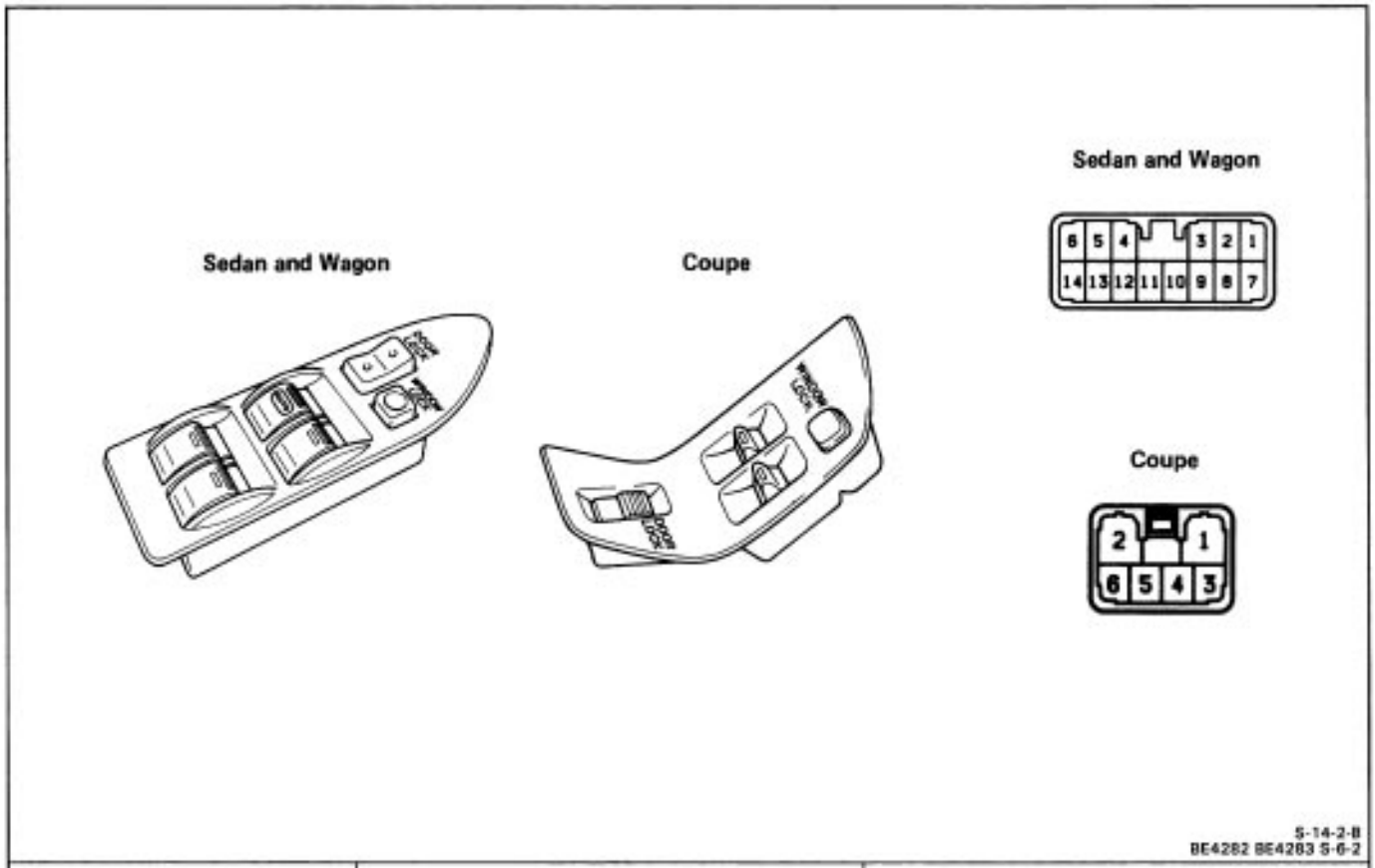

Operation Window		Front								Rear							
		Driver's				Passenger's				Left				Right			
Terminal	Sedan	1 or 2	6	7 or 8	13	1 or 2	5	7 or 8	12	1 or 2	9	7 or 8	10	1 or 2	11	7 or 8	14
Switch position	Coupe	1	6	3	2	1	4	3	5								
	UP	○	○	○	○	○	○	○	○	○	○	○	○	○	○	○	○
	OFF	○	○		○	○	○		○	○	○		○	○	○		○
	Down	○	○	○	○	○	○	○	○	○	○	○		○	○	○	○
	UP	○	○	○	○			○	○			○	○		○	○	
	OFF	○	○		○		○		○		○		○		○		○
	Down	○	○	○	○		○	○			○	○				○	○

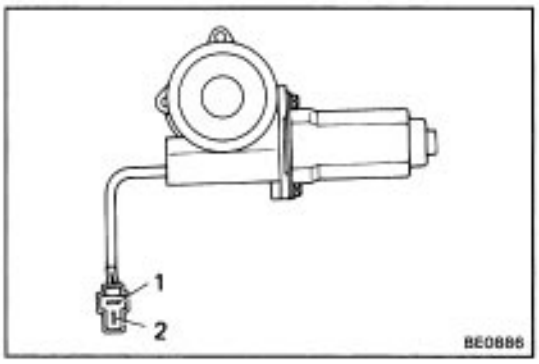

2. INSPECT POWER WINDOW MOTOR (Operation)

(a) Connect the positive (+) lead from the battery to terminal 2 and negative (–) lead to terminal 1, check that the motor turns (moves upward).

(b) reverse the polarity, check that the motor turns the opposite way (moves downward).

If operation is not as specified, replace the motor.

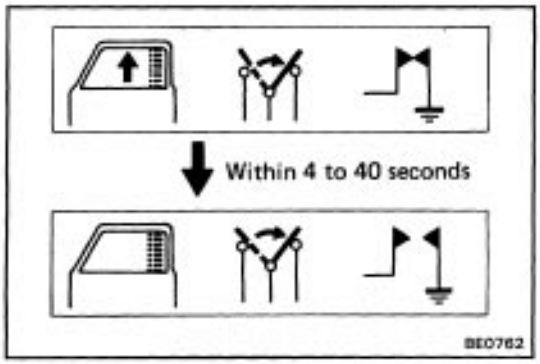

(Circuit Breaker/Operation)

(a) With the window in the full closed position, hold the power window switch in "UP" position and check that there is a circuit breaker operation noise within 4 to 40 seconds.

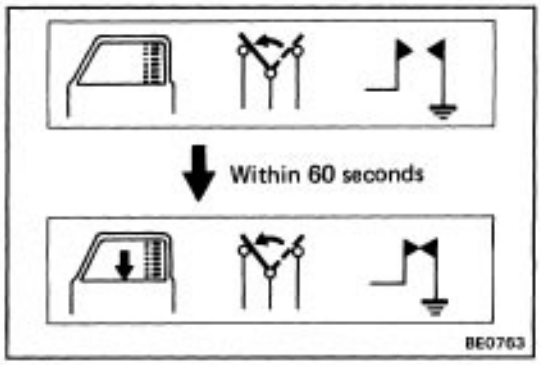

(b) With the window in the full closed position, hold the switch in "DOWN" and check that the window begins to descend within 60 seconds.
If operation is not as specified, replace the motor.

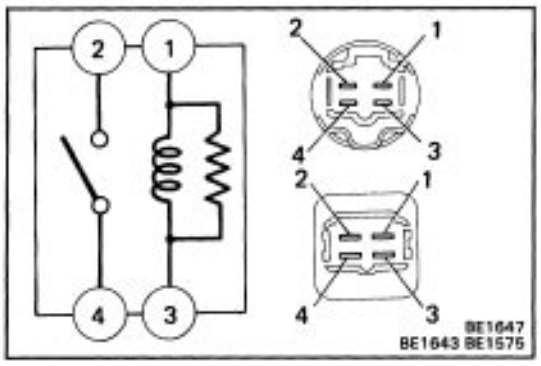

3. INSPECT RELAYS
(Power Window Main Relay)

Terminal / Condition	1	2	3	4
Constant	○		○	
Apply battery voltage to terminals 1 and 3.		○		○

If continuity is not as specified, replace the relay.

DOOR LOCK CONTROL SYSTEM
System Description

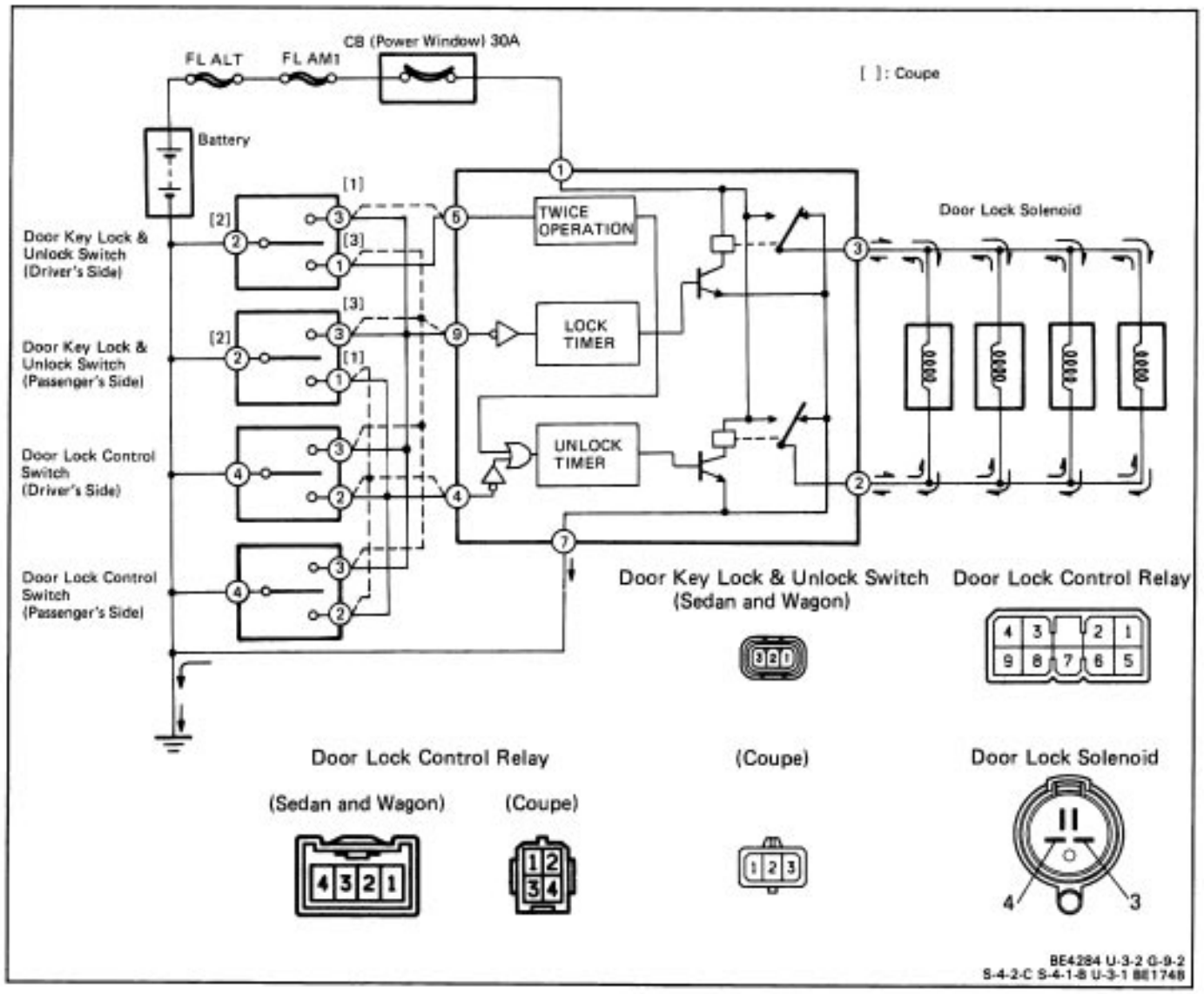

Current flows from the battery to terminal 1 [11 of the door lock control relay.
Operation examples of SW are shown below.

1. LOCK operation

When the door lock SW or door lock key SW is set to the ”LOCK” side, continuity is produced between Terminal 9 [9] of the door lock control relay and the body ground.

Then, the door lock control relay operates so that the current flows to Terminal 1 [1] → Terminal 3 [3] of the door lock control relay → the door lock solenoids → Terminal 2 [2] → Terminal 7 [7] of the door lock control relay → the body ground in order to make all door lock solenoids move in the LOCK direction.

2. UNLOCK operation

When the door lock SW or door lock key SW is set to the ”UNLOCK” side, continuity is produced between Terminal 4 [4] of the door lock control relay and the body ground.

Then, the door lock control relay operates so that the current flows to Terminal 1 [1) → Terminal 2 [2] of the door lock control relay → the door lock solenoids → Terminal 3 [3] → Terminal 7 [7] of the door lock control relay →the body ground in order to make all door lock solenoids move in the UNLOCK direction.

Parts Inspection

1. INSPECT SWITCHES

(Door Lock Control Switch/Continuity: Coupe)

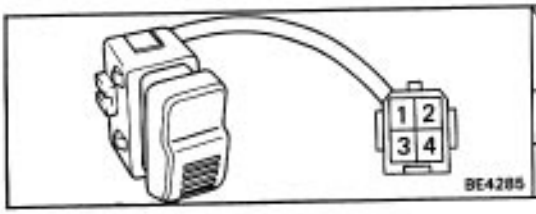

Terminal / Switch Position	2	4	3
LOCK	○	○	
UNLOCK		○	○

(Door Lock Control Switch/Continuity: Sedan and Wagon)

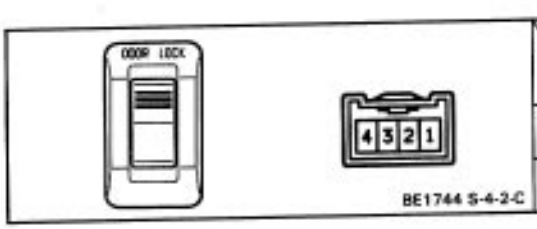

Terminal / Switch position	2	3	4
LOCK		○	○
UNLOCK	○		○

(Door Lock Key Lock & Unlock Switch/Continuity)

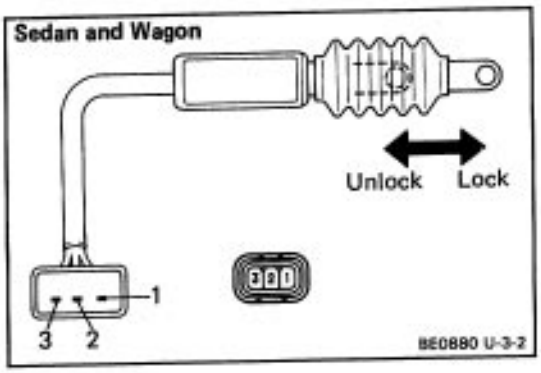

Terminal / Switch position	1	2	3
Switch to lock		○	○
Switch to unlock	○	○	

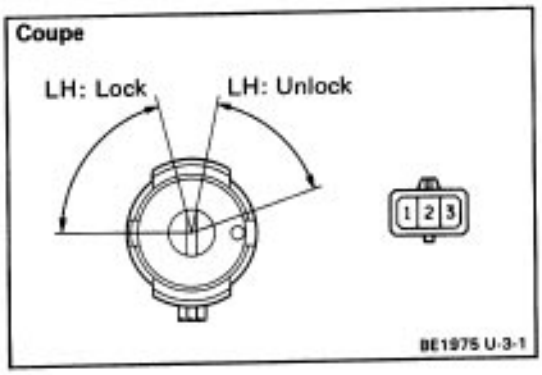

(Back Door Lock Control Switch/Continuity)

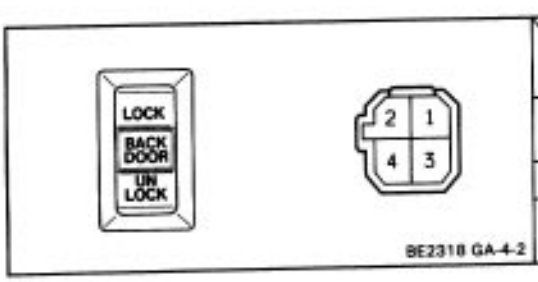

Terminal / Switch position	1	2	3	4
LOCK	○			○
		○	○	
OFF		○	○	○
UNLOCK	○		○	
		○		○

If continuity is not as specified, replace the switch.

System Inspection

(See page BE–4 for How to Inspect)

(1) First, select the applicable item in the **Trouble** column of the trouble chart, then look at the applicable codes in the Check order column.
(2) Using the inspection chart, inspect the first item shown in the **Check order** column.
(3)–1 If the inspection result is good, check the next item. If there are no further codes, advance to step (4).
(3)–2 If the inspection result is no good, inspect the item in the **Possible cause** column in the inspection chart. After inspecting, check the system operation again. If the result is still no good, inspect the next item.
(4) If all inspection items are good, inspect the applicable item in the **Possible cause** column in the trouble chart.

[Trouble Chart]

Trouble	Check order	Possible cause
All door locks do not operate	A→B→C→D→E→F→	Door lock control relay faulty
Does no operate for door lock SW	E→F→	
Does no operate for door lock key SW		

[Part Location and Connector Diagram]

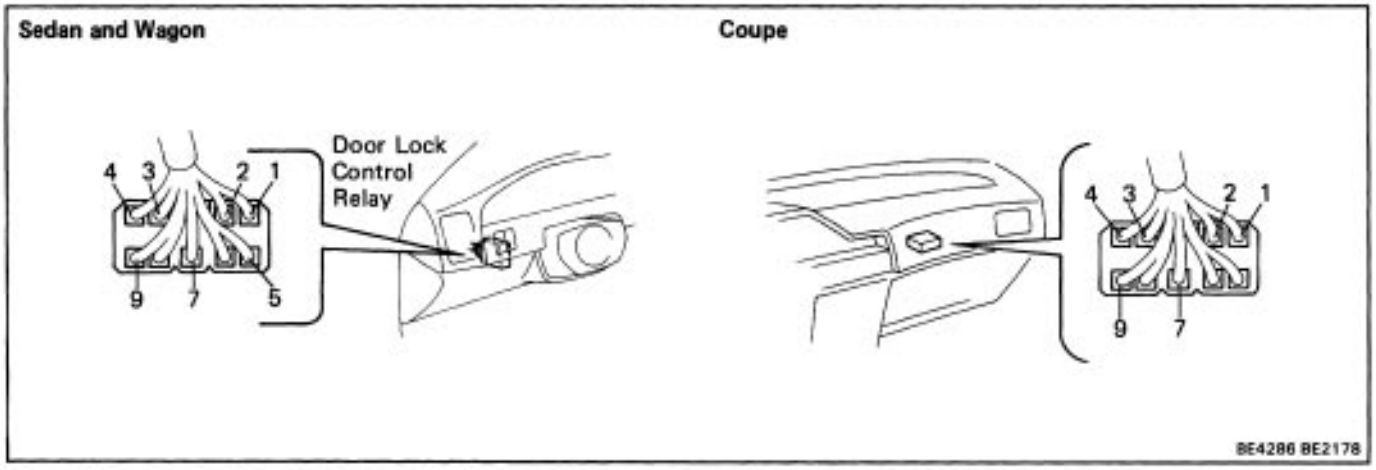

[Inspection Chart]

Code *A, *B:
Disconnect the door lock control relay connector and inspect the connector on wire harness side.
CAUTION: During the inspection be careful not to short terminal 1, on which the battery voltage is acting.
(Terminals of Door Lock Control Relay)

Code	Connection	Check condition	Specified value	Possible cause
*A	2 — Ground	Connect between terminals 1 and 3	Move to lock	Solenoid circuit faulty
*B	3 — Ground	Connect between terminals 1 and 2	Move to unlock	
C	1 — Ground	Constant	Battery voltage	Power source circuit faulty
D	7 — Ground	Constant	Continuity	Body ground circuit faulty
E	9 — Ground	Constant	Moves to lock	Door lock SW, Door lock control faulty
F	4 — Ground	Constant	Moves to unlock	

[ ] : Coupe models

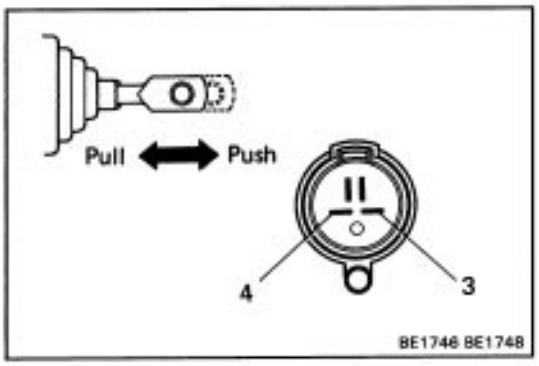

2. INSPECT DOOR LOCK SOLENOID

(Front Door and Rear Door)

(a) Connect the positive (+) lead from the battery to terminal 4 and the negative (–) lead to terminal 3, check that the solenoid operates to pull the shaft.

(b) Reverse the polarity, check that the solenoid operates to push the shaft.

If operation is not as specified, replace the solenoid.

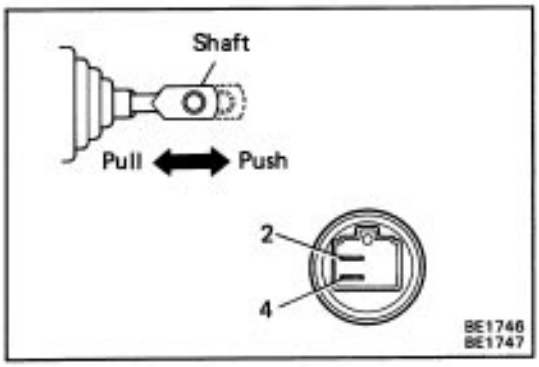

(Back Door)

(a) Connect the positive (+) lead from the battery to terminal 2 and the negative (–) lead to terminal 4, check that the solenoid operates to pull the shaft.

(b) Reverse the polarity, check that the solenoid operates to push the shaft.

If operation is not as specified, replace the solenoid.

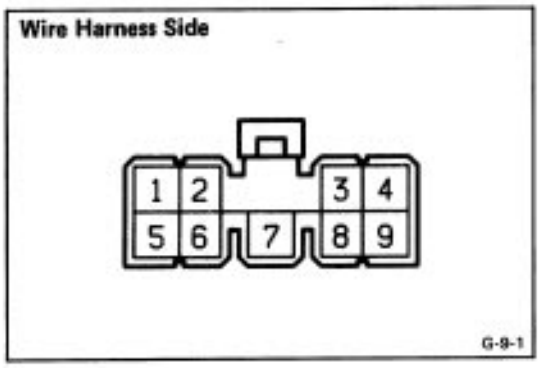

3. INSPECT DOOR LOCK CONTROL RELAY

(Relay Circuit)

Disconnect the connector from the relay and inspect the connector on wire harness side as shown in the chart.

Check for	Tester connection	Condition		Specified value
Continuity	2 – Ground or 3 – Ground	Constant		No continuity
	9 – Ground	Door lock control switch or door lock key switch position	OFF or UNLOCK	No continuity
			LOCK	Continuity
	7 – Ground	Constant		Continuity
	4 – Ground	Door lock control switch or passenger's door lock key switch position	OFF or LOCK	No continuity
			UNLOCK	Continuity
	5 – Ground	Driver's door lock key switch position	OFF or LOCK	No continuity
			UNLOCK	Continuity
Voltage	1 – Ground	Constant		Battery voltage

If circuit is as specified, replace the relay.

SUN ROOF SYSTEM
System Description (Coupe)

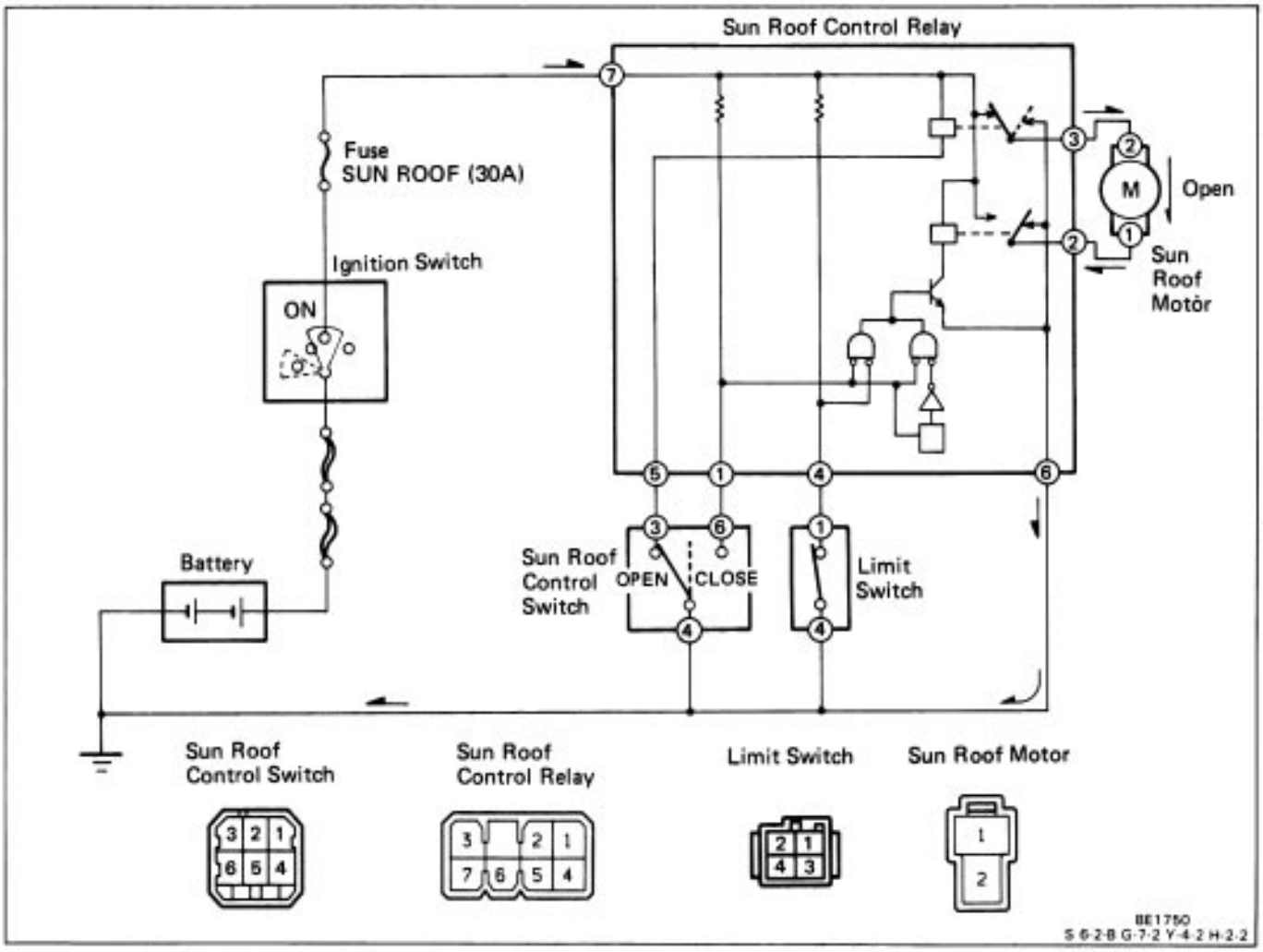

When the ignition SW is on, current flows from the battery to Terminal 7 of the sun roof control relay.
Operation examples of each SW are shown below.

1. OPEN operation

When the SW on the "OPEN" side of the sun roof control SW is pushed, continuity is produced between Terminal 5 of the sun roof control relay and body ground.

Then, the sun roof control relay operates, current flows through Terminal 7 → Terminal 3 of the sun roof control relay → Terminal 2 → Terminal 1 of sun roof motor → Terminal 2 → Terminal 6 of the sun roof control relay → the body ground, and the motor starts to run in order to open the sun roof.

2. CLOSE operation

When the SW on the "CLOSE" side of the sun roof control SW is pushed, continuity is produced between Terminal 1 of the sun roof control relay and body ground.

Then, the sun roof control relay operates, current flows through Terminal 7 → Terminal 2 of the sun roof control relay → Terminal 1 → Terminal 2 of sun roof motor → Terminal 3 → Terminal 6 of the sun roof control relay → the body ground, and the motor starts to run in order to close the sun roof.

When there is no sun roof comes 100 mm (3.94 in.) short of fully closed position, the limit SW is turned off, so that there is no continuity between Terminal 4 of the sun roof control relay and the body ground is open. As a result, because the sun roof control relay ceases to operate, the sun roof stops at that position.

When the SW is pushed again after being released, the sun roof control relay operates to turn the limit SW on and works in the above way until the sun roof is fully closed.

System Inspection (Coupe)

(See page BE–4 for How to Inspect)

(1) First, select the applicable item in the **Trouble** column of the trouble chart, then look at the applicable codes in the **Check order** column.
(2) Using, the inspection chart, inspect the first item shown in the **Check order** column.
(3)–1 If the inspection result is good, check the next item. If there are no further codes, advance to step (4).
(3)–2 If the inspection result is no good, inspect the item in the **Possible cause** column in the inspect chart. After inspecting, check the system operation again. If the result is still no good, inspect the next item.
(4) If all inspection items are good, inspect the applicable item in the **Possible cause** column in the trouble chart.

[Trouble Chart]

Trouble	Check order	Possible cause
Does not move to the open side	A → B → C → E → F →	Sun roof control relay faulty
Does not move to the close side	A → B → D → G → H → I →	
Does not stop at approx. 100 mm (3.94 in.) before fully closed position	J →	Limit SW circuit faulty

[Parts Location and Connector Diagram]

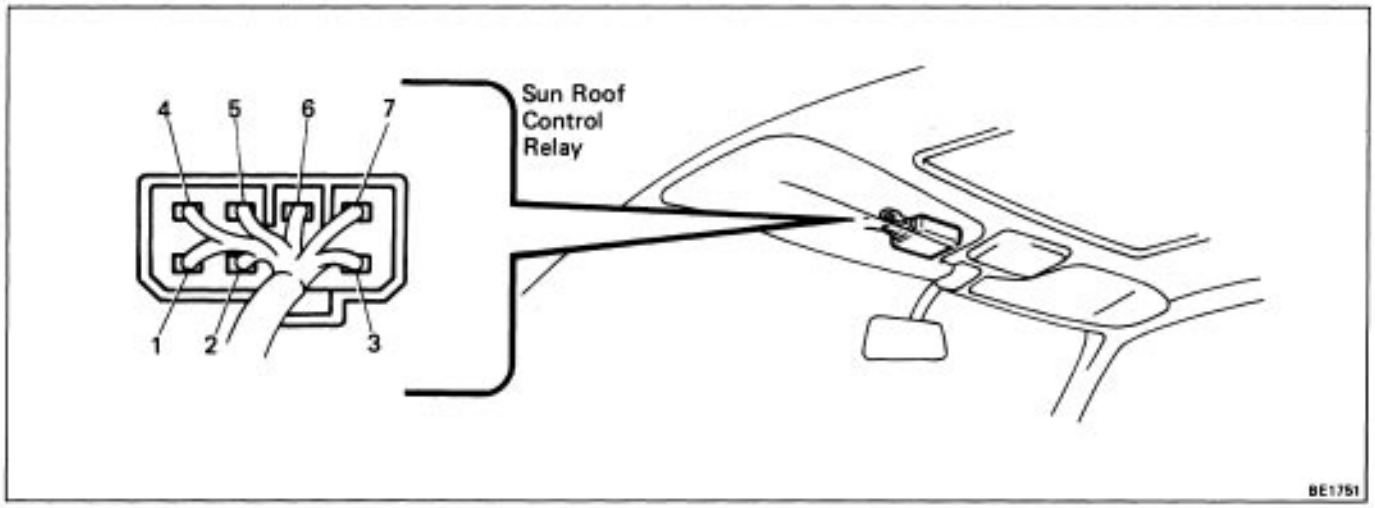

Inspect Chart]
(Terminals of Sun Roof Control Relay)

Code	Connection	Check condition	Specified value	Possible cause
A	7 – Ground	Ignition SW ON	Battery voltage	Power source circuit faulty
B	6 – Ground	Constant	Continuity	Body ground circuit faulty
C	5 – Ground	Ignition SW ON	Moves to the open side	Sun roof control switch circuit faulty
D	1 – Ground	Ignition SW ON	Moves to the close side	
E	3 – Ground	Push "OPEN" on the control SW	Battery voltage	Sun roof motor circuit faulty
F	2 – Ground	Push "OPEN" on the control SW	Does not move to the open side	
G	2 – Ground	Push "CLOSE" on the control SW	Battery voltage	

CONTINUED FROM PAGE BE–70

Code	Connection	Check condition	Specified value	Possible cause
H	3 – Ground	Push "CLOSE" on the control SW	Does not move to the close side	Sun roof motor circuit faulty
I	4 – Ground	Push "CLOSE" on the control SW	Moves to the close side	Limit SW circuit faulty
J	4 – Ground	Push "CLOSE" on the control SW	Voltage appears momentarily at approx. 100 mm (3.94 in.) before fully closed position	Sun roof control really faulty

Parts Inspection

1. INSPECT SWITCHES

(Control Switch/ Continuity: Sedan)



Terminal / Switch position	1	3	4	5
OPEN	○	○	○	○
OFF	○	○	○	○
CLOSE	○			○
		○	○	

(Control Switch/ Continuity: Wagon)


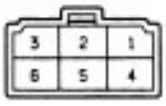

Terminal / Switch position	1	3	4	5
OPEN	○	○	○	○
OFF	○	○	○	○
CLOSE	○			○
		○	○	

(Control Switch/ Continuity: Coupe)

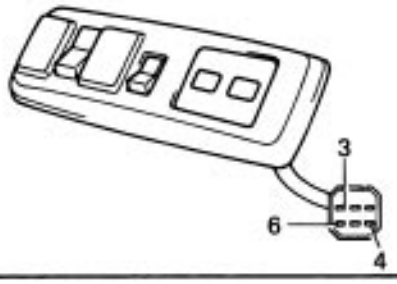

Terminal / Switch position	3	4	6
OPEN	○	○	
OFF			
CLOSE		○	○

(Limit Switch/ Continuity: Coupe)

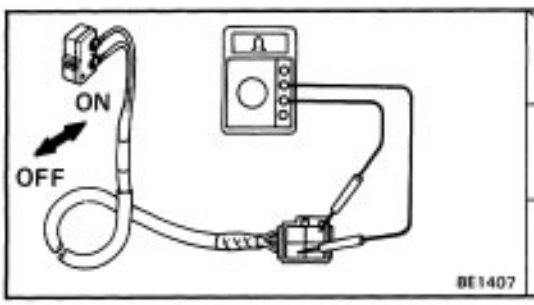

Terminal / Switch position	1	4
ON (switch pin pushed)	○	○
OFF (switch free)		

If continuity is not as specified, replace the switch.

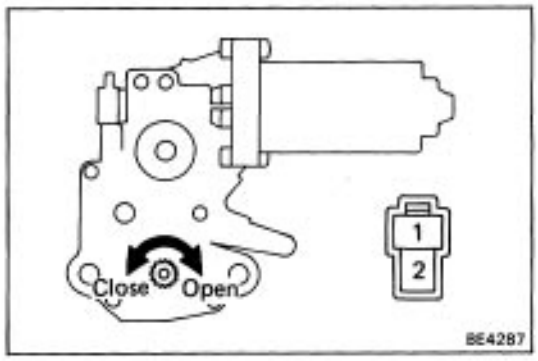

2. INSPECT SUN ROOF MOTOR

(a) Connect the positive (+) lead from the battery to terminal 2 and the negative (–) lead to terminal 1, check that the motor turns clockwise (moves to the open side).

(b) Reverse the polarity, check that the motor turns counterclockwise (moves to the close side).

If operation is not as specified, replace the motor.

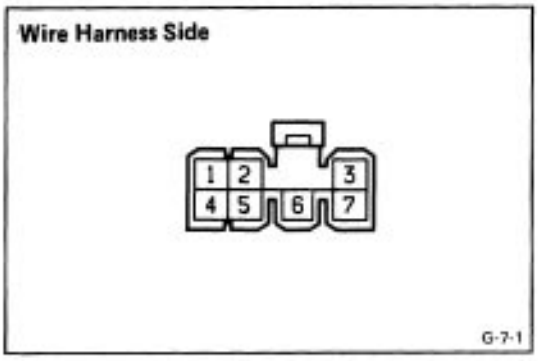

3. INSPECT SUN ROOF CONTROL RELAY

(Relay Circuit)

Disconnect the connector form the relay and inspect the connector on wire harness side as shown in the chart.

Check for	Tester connection	Condition		Specified value
Continuity	1 – Ground	Sun roof control switch position	CLOSE	Continuity
			OFF or OPEN	No continuity
	2 – Ground or 3 – Ground	Constant		No continuity
	4 – Ground	LIMIT switch position	OFF (Move sun roof approx. 100 mm (3.94 in.) before closed position.)	No continuity
			ON (Move sun roof except approx. 100 mm (3.94 in.) before closed position.)	Continuity
	5 – Ground	Sun roof control switch position	OPEN	Continuity
			OFF or CLOSE	No continuity
	6 – Ground	Constant		Continuity
Voltage	7 – Ground	Ignition switch position	LOCK or ACC	No voltage
			ON	Battery voltage

If circuit is as specified, inspect the relay operation.

CRUISE CONTROL SYSTEM
Wiring diagram

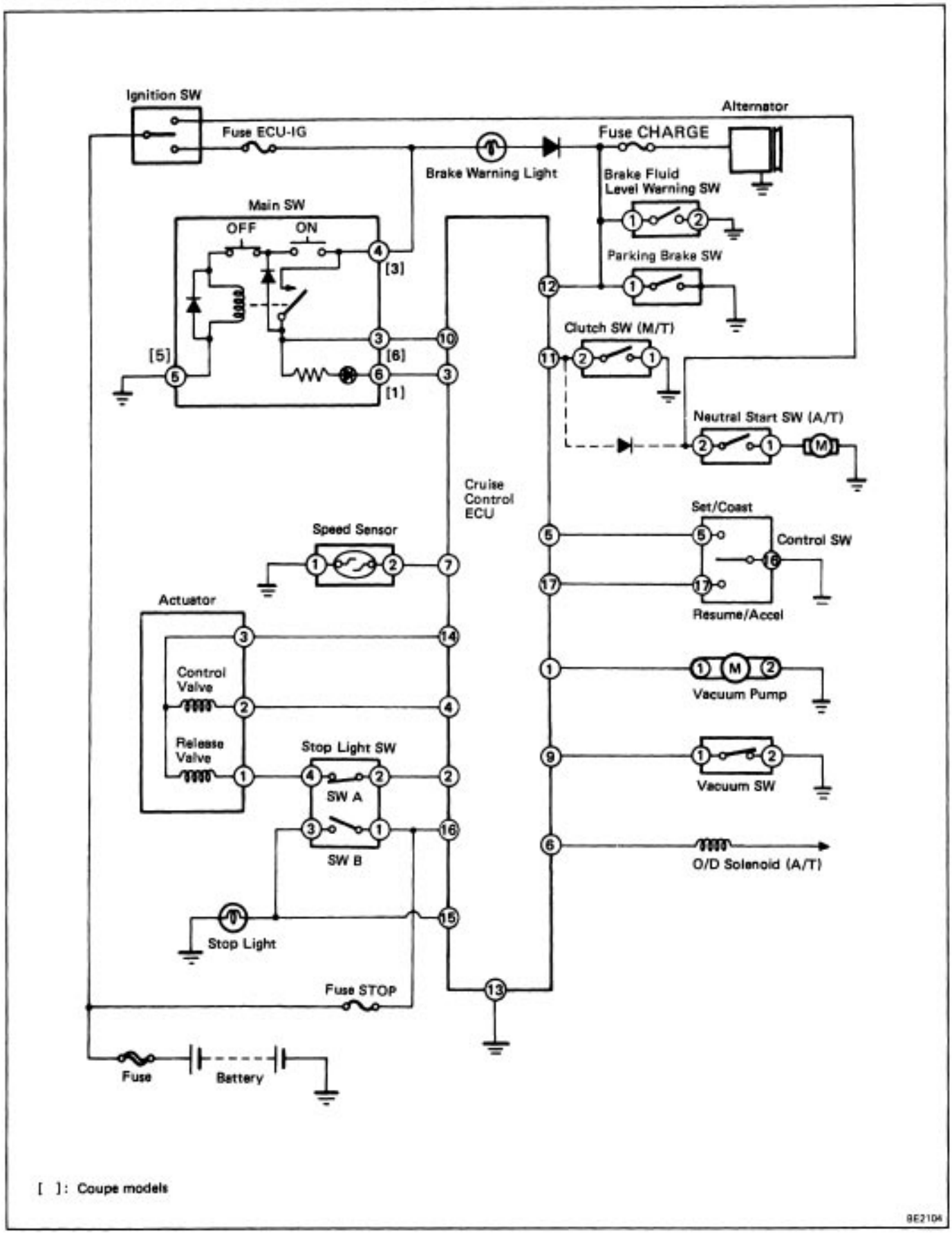

Cruise Control ECU

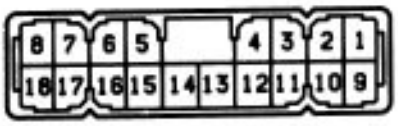

Main Switch
(Coupe)



(Sedan and Wagon)



Control Switch

Connector "A" Connector "B"

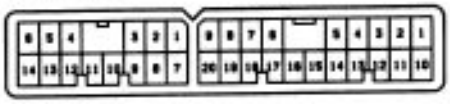

Actuator



Stop Light Switch



Clutch Switch



Neutral Start Switch



Parking Brake Switch

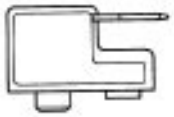

Speed Sensor

(Sedan and Wagon) (Coupe)

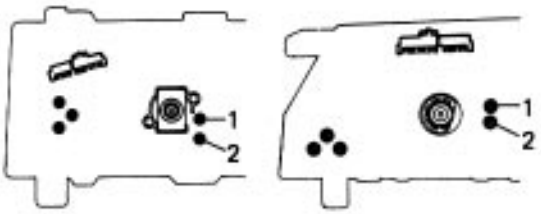

Vacuum Switch



Vacuum Pump



Brake Fluid Level
Warning Switch



S-18-2-A S-6-2-B SH-12-2
V-34-2 IS-3-2-A BE0335
G-2-2 SH-4-2-A BE1412
BE1831 BE1829 BE4496 IS-2-2-C
IS-2-2-B

System Description

The system description is as follows;
When the ignition switch is on, current flows from the battery to Terminal 2 of the Main switch.

1. Main Switch operation

When the main SW is turned on, current flows through Terminal 4 [3] → Terminal 5 [5] of the main SW → the body ground.

And then, turns on (closes) the relay contact in the main SW. As a result, current flows from Terminal 4 [3] → Terminal 3 [6] → of the main SW → So it is supplied to Terminal 10 of the Cruise Control ECU (hereafter called ECU).

Also, current flows from Terminal 4 [3] → lighting the power indicator → Terminal 6 [11] of the main SW → Terminal 3 of the ECU.
Therefore, the main SW remains on and continues to supply current to the ECU.

2. Control Switch operation

The control SW assembly controls the SET/COAST and RESUME/ACCEL functions.

When each SW is turned on, the signal (earth voltage) is led to the Terminal 17 or Terminal 5 of the ECU.

Then, the vehicle speed at the moment the SW is released is registered in memory.

3. Speed Control operation

When the vehicle speed is set by the control SW, the ECU is sent a signal to Terminal 2 of the ECU → Terminal 2 → Terminal 4 of stop light SW → Terminal 1 of actuator (release valve side).

At the same time, the ECU sends a signal from Terminal 4 of the ECU to Terminal 2 of actuator (control valve side).

Then, the actuator increases or decreases the throttle valve opening angle in accordance with the signal from the ECU.

4. Cancel Switch operation

The Cruise Control System is provided with several types of cancel SW, such as the Cancel SW of Control SW, the Brake Light SW, the Parking Brake SW, and the Neutral Start SW (A/T model) or Clutch
SW (M/T model).

(a) Parking Brake SW

When the parking brake lever is pulled, the Parking Brake SW is turned on → sends a cancellation signal (earth voltage) to Terminal 12 of the ECU.

(b) Neutral Start SW (A/T models)

When the shift lever is set to the ”P” or ”N” range, the Neutral Start SW goes on. → Sending a cancellation signal (earth voltage) to Terminal 11 of the ECU.

(c) Clutch SW (M/T model)

When the clutch pedal is depressed on, the Clutch SW goes on → Sending a cancellation signal (earth voltage) to Terminal 11 of the ECU.

(d) Stop Light SW

When the brake pedal is depressed, SW A of the stop light SW is turned off. And SW B of the stop light SW is turned on → current flows through Terminal 1 → Terminal 3 of the stop light SW → body ground.

Thereby, the actuator is shut off.

Therefore, the operation of the Cruise Control System is canceled and the actuator is shut off due to the operation of these switches.

OUTPUT OF DIAGNOSTIC CODES

1. READ TYPE A CODE

(a) Turn the ignition switch on.
(b) Turn the set/coast switch on, and keep it on.
(c) Push the main switch on.
(d) Turn the set/coast switch off.
(e) Meet the conditions listed below.
(f) Read the diagnostic code on the main switch indicator.

No.	Conditions	Indication code	Diagnosis
1	Set/coast switch on		Set/coast switch circuit is normal.
2	Resume/accel switch on		Resume/accel switch circuit is normal.
3	Vacuum switch on		Vacuum switch circuit is normal.
4	Each cancel switch on (Stop light switch, Parking brake switch, Clutch switch, Neutral start switch)		Each cancel switch circuit is normal.
5	Drive 40 km/h (25 mph) or over		Speed sensor circuit is normal.
6	Drive 30 km/h 0 9 mph) or below		Speed sensor circuit is normal.

BE1869

HINT:

- To save time performing the next test, do not turn off the ignition switch when steps (a) – (f) are completed.
- Checking of No.4 code is done with the vehicle jacked up and the engine idling.
- If there is no indication code, perform diagnosis and inspection. (See page BE–88)

2. READ TYPE B CODE

(a) Diagnostic codes are indicated using the power indicator of the main switch when automatic cancellation occurs.
(b) If while driving with the cruise control on, the system is cancelled by a malfunction in either the actuator or speed sensor, the main switch indicator will blink 5 times.
(c) While driving at a speed of 16 km/h (10 mph) or less, press the SET/COAST switch three times in two seconds.

HINT: In order to retain the diagnostic code when a malfunction has occurred, always inspect with the ignition and main switches on.
Should the power be cut, the diagnostic code will be erased from the ECU memory.

Indication code		Diagnosis
	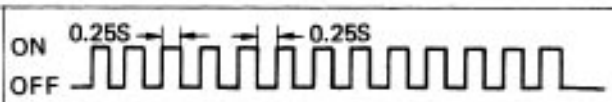	Normal.
11		Actuator circuit is abnormal.
21	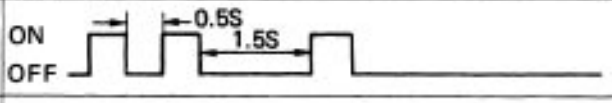	Speed sensor signal circuit is abnormal.
23		*Vehicle speed decreases to 16 km/h (10 mph) or more below set speed.
31		Resume/accel switch circuit is abnormal.
33		Resume/accel switch and set/coast switch circuit is abnormal.
*: If the set speed can be maintained when the speed control switch is again set at SET/COAST, there is no malfunction.		

HINT:

- Indication codes appear in order from No. 11.
- Indication is stopped when vehicle speed is over 16 km/h (10 mph) or main switch is turned off.
- If there is no indication code, perform diagnosis and inspection. (See page BE–88)

Troubleshooting

Problem	Type of Diagnostic Code		* Letter of Inspection Chart
Cruise control does not operate.	(a) Inspect type A codes	No. 1 NO	B
		No. 2 NO	C
		No. 3 NO	J
		No. 4 NO	F to I
		No. 5 NO	E
		No. 6 NO	E
	(b) Inspect type B codes	11	D
		21	E
		23	D, E
		31	C
		33	B, C
	(c) All diagnostic codes are normal.		A, B, E
Vehicle speed does not decrease when coast switch turned on.	Inspect No. 1 of type A code	OK	D
		NO	B
Vehicle speed fluctuates when set switch turned on.			D, E
Vehicle speed does not accelerate when accel switch turned on.	Inspect No. 2 of type A	OK	D
Vehicle speed does not return to memorized speed when resume switch turned on.		NO	C
Setting speed deviates on high side.			D, E
Setting speed deviates on low side.			
Return and acceleration response is sluggish.	Inspect No. 3 of type A code	OK	D
		NO	J
Setting speed does not cancel when brake pedal depressed.	Inspect No. 4 of type A code	OK	D
		NO	F
Setting speed does not cancel when parking brake pulled up.	Inspect No. 4 of type A code	OK	D
		NO	G
Setting speed does not cancel when clutch pedal depressed (M/T only).	Inspect No. 4 of type A code	OK	D
		NO	H
Setting speed does not cancel when shifted to "N" range (A/T only).	Inspect No. 4 of type A code	OK	D
		NO	I
Speed can be set below about 35 km/h (22 mph).	Inspect No. 5 and Inspect No. 6 of type A codes	OK	D
Cruise control will not disengage even about 40 km/h (25 mph).		NO	E

* When a problem exists, after checking the diagnostic code, please refer to the following pages according to the Letter on the Inspection Chart.

Inspection Chart

A **INSPECTION OF POWER SOURCE CIRCUIT**

( ) : Coupe models

Turn ignition switch on.

Is ECU–IG fuse normal?

No → Replace fuse. Is operation normal?

No → • Short circuit in wire harness between ECU–IG fuse and terminal 4 (3) of main switch.
• Inspect main switch. (See page BE–102)

Yes → Fuse faulty.

Yes

MAIN SWITCH

INSPECT GROUND CONNECTION
Is there continuity between terminal 5 and body ground?

No → • Open circuit in wire harness between terminal 5 of main switch and body ground.
• Body ground faulty.

Yes

INSPECT POWER SOURCE
Is there battery voltage between terminal 4 (3) and body ground?

No → Open circuit in wire harness between ECU–IG fuse and terminal 4 (3) of main switch.

Yes

INSPECT SWITCH OPERATION
Is there battery voltage between terminal 3 (6) and body ground with main switch turned on?

No → Inspect main switch. (See page BE–102)

Yes

Is there battery voltage between terminal 3 (6) and body ground with main switch turned off?

Yes → Inspect main switch. (See page BE–102)

No

INSPECT INDICATOR LIGHT OPERATION
Connect terminal 6 (1) to body ground.
Does indicator light light with main switch turned on?

No → Inspect main switch. (See page BE–102)

Yes

Does indicator light light with main switch turned off?

Yes → Inspect main switch. (See page BE–102)

No

CONTINUED ON NEXT PAGE

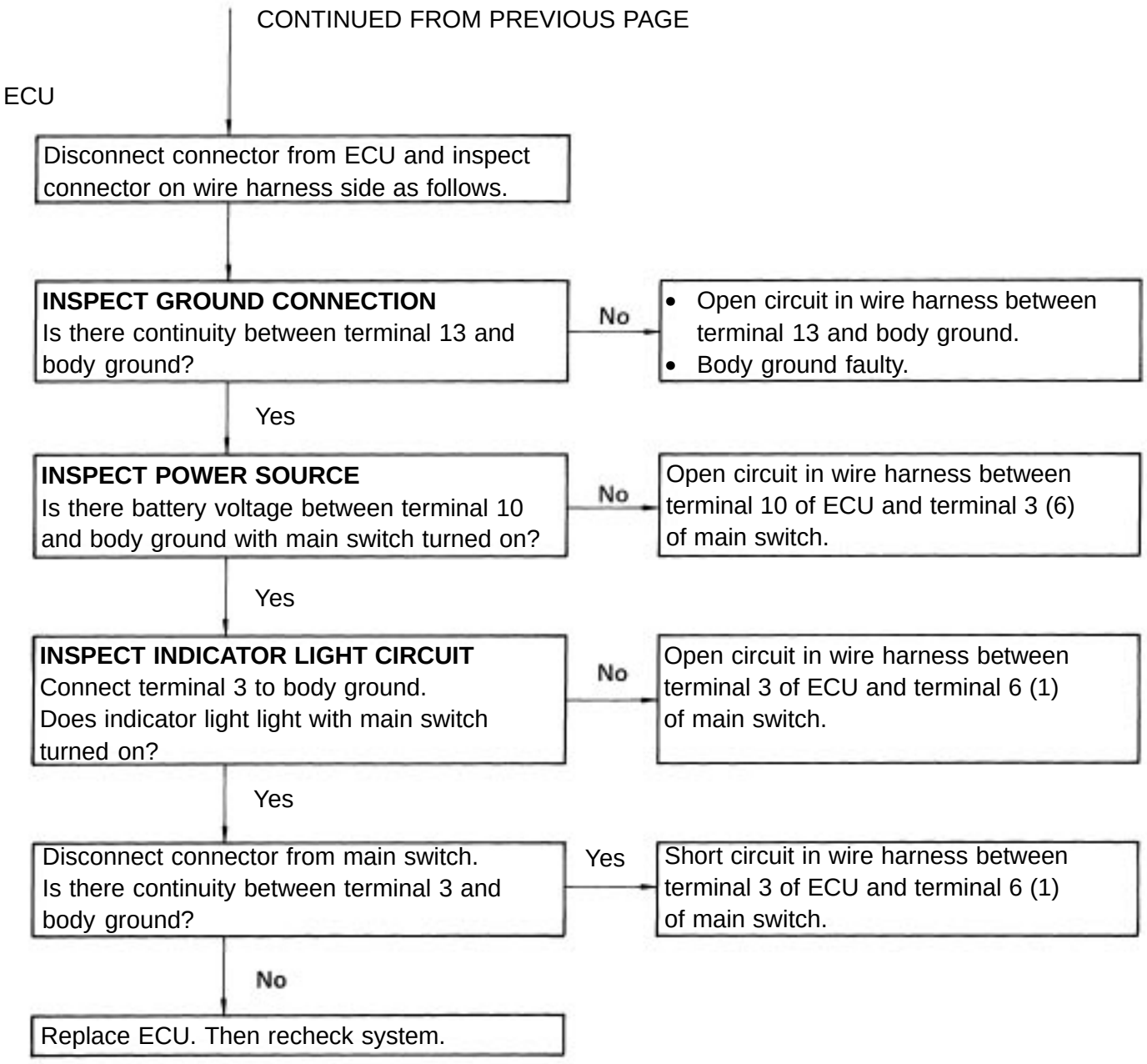

Coupe models

B INSPECTION OF SET/COAST SWITCH CIRCUIT

Turn ignition switch off.

CONTROL SW

INSPECT GROUND CONNECTION
Disconnect connector from control switch.
Is there continuity between terminal 16 of wire harness side connector and body ground?

No →
- Open circuit in wire harness between terminal 16 and body ground.
- Body ground faulty.

Yes

INSPECT SET/COAST SWITCH OPERATION
Is set/coast switch operation normal?
(See page **BE–102**)

No → Replace control switch.

Yes

Connect connector to control switch.

ECU

Disconnect connector from computer and inspect connector on wire harness side as follows.

INSPECT SET/COAST SWITCH CIRCUIT
Is there continuity between terminal 5 and body ground?

Yes → Short circuit in wire harness between terminal 5 of computer and terminal 5 of control switch.

No

Is there continuity between terminal 5 and body ground with set/coast switch turned on?

No → Open circuit in wire harness between terminal 5 of computer and terminal 5 of control switch.

Yes

Replace computer. Then recheck system.

C INSPECTION OF RESUME/ACCEL SWITCH CIRCUIT

Turn ignition switch off.

CONTROL SW

INSPECT GROUND CONNECTION
Disconnect connector from control switch.
Is there continuity between terminal 16 of wire harness side connector and body ground?

No →
- Open circuit in wire harness between terminal 16 and body ground.
- Body ground faulty.

Yes

INSPECT RESUME/ACCEL SWITCH OPERATION
Is resume/accel switch operation normal?
(See page BE–102)

No → Replace control switch.

Yes

Connect connector to control switch.

ECU

Disconnect connector from ECU and inspect connector on wire harness side as follows.

INSPECT RESUME/ACCEL SWITCH CIRCUIT
Is there continuity between terminal 17 and body ground?

Yes → Short circuit in wire harness between terminal 17 of ECU and terminal 17 of control switch.

No

Is there continuity between terminal 17 and body ground with resume/accel switch turned on?

No → Open circuit in wire harness between terminal 17 of ECU and terminal 17 of control switch.

Yes

Replace ECU. Then recheck system.

D INSPECTION OF ACTUATOR CIRCUIT

Turn ignition switch off.

VACUUM HOSE

Are there cracks or other damage on the vacuum hose?
- Yes → Replace vacuum hose.
- No

ACTUATOR

INSPECT CABLE FREEPLAY
Is control cable freeplay less than 10 mm (0.39 in.)
- No → Adjust control cable freeplay.
- Yes

INSPECT ACTUATOR OPERATION
Disconnect connector– from actuator.
Is actuator operation normal?
(See page BE–103)
- No → Replace actuator.
- Yes

STOP LIGHT SW

INSPECT STOP LIGHT SWITCH CIRCUIT
Disconnect connector from stop light switch.
Is there continuity between terminal 4 of wire harness side connector and body ground?
- Yes → Short circuit in wire harness between terminal 1 of actuator and terminal 4 of stop light switch.
- No

INSPECT STOP LIGHT SWITCH OPERATION
Is stop light switch operation normal?
(See page BE–102)
- No → Replace stop light switch.
- Yes

Connect connectors to stop light switch and actuator.

CONTINUED ON NEXT PAGE

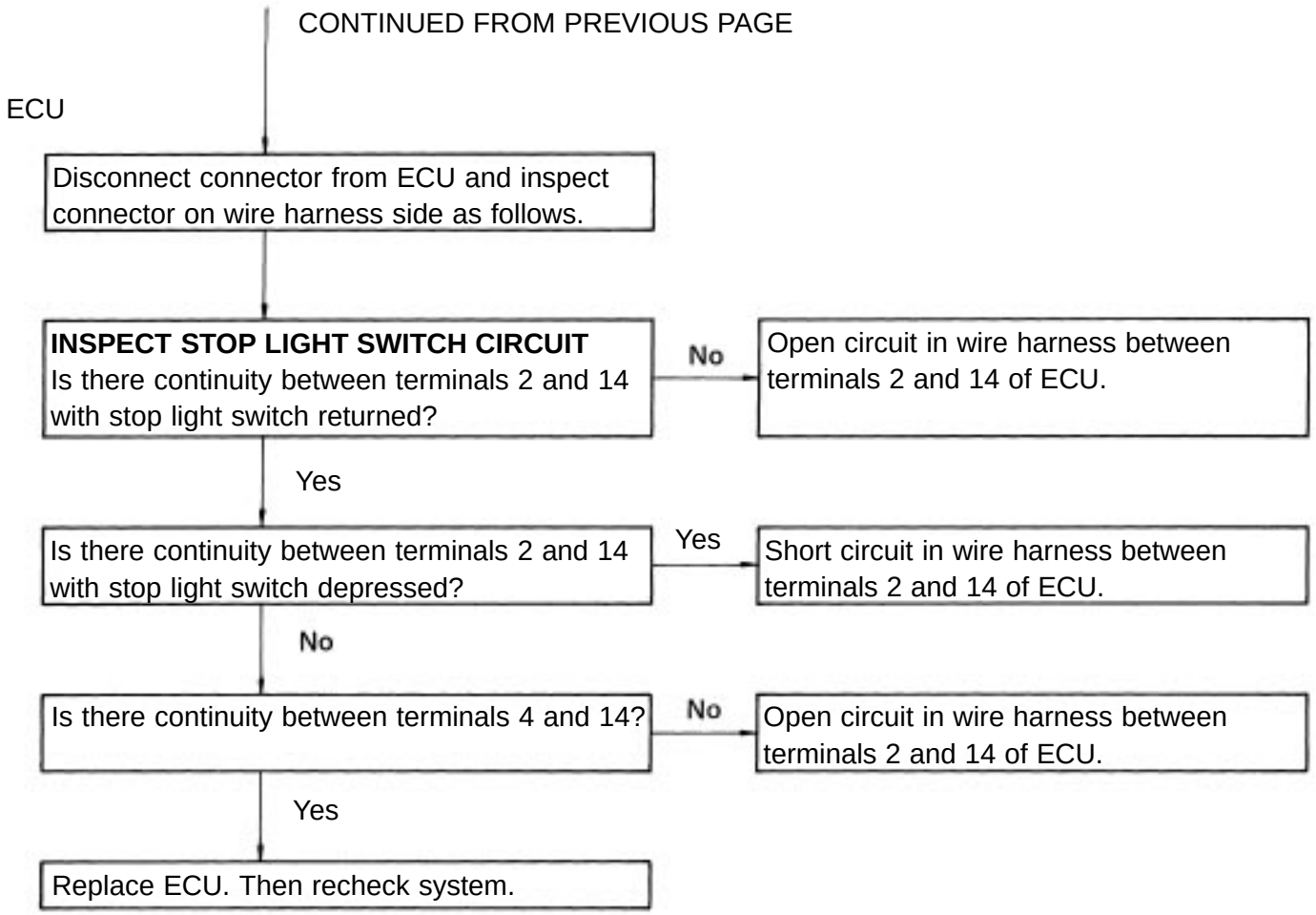
CONTINUED FROM PREVIOUS PAGE
ECU
Disconnect connector from ECU and inspect connector on wire harness side as follows.
INSPECT STOP LIGHT SWITCH CIRCUIT
Is there continuity between terminals 2 and 14 with stop light switch returned?
No
Open circuit in wire harness between terminals 2 and 14 of ECU.
Yes
Is there continuity between terminals 2 and 14 with stop light switch depressed?
Yes
Short circuit in wire harness between terminals 2 and 14 of ECU.
No
Is there continuity between terminals 4 and 14?
No
Open circuit in wire harness between terminals 2 and 14 of ECU.
Yes
Replace ECU. Then recheck system.

E INSPECTION OF SPEED SENSOR CIRCUIT

SPEED METER CABLE

INSPECT SPEED METER CABLE
Does the meter fluctuate when driving at a steady speed?

Yes → Meter cable faulty.

No

Turn ignition switch off.

SPEED SENSOR

Remove combination meter with wire harness connected.
Inspect combination meter as follows.

INSPECT GROUND CONNECTION
Is there continuity between terminal 1 and body ground?

No → Open circuit in wire harness or meter circuit plate between terminal 1 and body ground.

Yes

INSPECT SPEED SENSOR OPERATION
Is speed sensor operation normal?
(See page BE–48)

No → Speed sensor faulty.

Yes

ECU

INSPECT SPEED SENSOR CIRCUIT
Disconnect connector from ECU.
Is there continuity between terminal 2 of speed sensor and terminal 7 of ECU?

No → Open circuit in wire harness or meter circuit plate between terminal 2 of speed sensor and terminal 7 of ECU.

Yes

Replace ECU. Then recheck system.

F INSPECTION OF STOP LIGHT SWITCH CIRCUIT

Turn ignition switch off.

Is STOP fuse normal?

No → Replace fuse. Is operation normal?

No → Short circuit in wire harness between terminal 16 of computer or terminal 1 of stop light switch and fuse.

Yes → Fuse faulty.

Yes

STOP LIGHT SW

INSPECT GROUND CONNECTION
Disconnect connector from stop light switch.
Is there continuity between terminal 3 of wire harness side connector and body ground?

No →
- Open circuit in wire harness between terminal 3 and body ground.
- Body ground faulty.

Yes

INSPECT STOP LIGHT SWITCH OPERATION
Is stop light switch operation normal?
(See page BE–102)

No → Replace stop light switch.

Yes

Connect connector to stop light switch.

ECU

Disconnect connector from ECU and inspect connector– on wire harness side as follows.

INSPECT STOP FUSE CIRCUIT
Is there battery voltage between terminal 16 and body ground with brake pedal released?

No → Open circuit in wire harness between terminal 16 of ECU and STOP fuse.

Yes

INSPECT STOP LIGHT SWITCH CIRCUIT
Is there battery voltage between terminal 15 and body ground with brake pedal depressed?

No → Open circuit in wire harness between terminal 15 of ECU and terminal 3 of stop light switch.

Yes

Replace ECU. Then recheck system.

G INSPECTION OF PARKING BRAKE SWITCH CIRCUIT

Turn ignition switch off.

ALTERNATOR

INSPECT ALTERNATOR OPERATION
Is alternator operation normal? (See page CH–8)

No → Replace alternator.

Yes

BRAKE FLUID LEVEL WARNING SWITCH

INSPECT GROUND CONNECTION
Disconnect connector from brake level warning switch.
Is there continuity between terminal 2 of wire harness side connector and body ground?

No →
- Open circuit in wire harness between terminal 2 and body ground.
- Body ground faulty.

Yes

INSPECT BRAKE WARNING SWITCH
Is brake fluid level warning switch operation normal? (See page BE–57)

No → Replace brake warning switch.

Yes

Connect the connector to brake warning switch.

PARKING BRAKE SWITCH

INSPECT PARKING BRAKE SWITCH OPERATION
Disconnect connector from parking brake switch.
Is parking brake switch operation normal? (See page BE–57)

No → Replace parking brake switch.

Yes

Connect connector to parking brake switch.

ECU

Disconnect connector from ECU and inspect connector on wire harness side as follows.

Remove CHARGE fuse and ignition switch tuned on.

Is there no voltage between terminal 12 and body ground with parking brake pulled up?

No → Open circuit in wire harness between terminal 12 of ECU and terminal of parking brake switch.

Yes

Is there battery voltage between terminal 12 and body ground with parking brake released?

No → Short circuit in wire harness between terminal 12 of ECU and terminal 1 of parking brake switch. terminal 1 of brake fluid level warning switch or terminal 2 of alternator.

Yes

Replace ECU. Then recheck system.

H INSPECTION OF CLUTCH SWITCH CIRCUIT

Turn ignition switch off.

CLUTCH SW

INSPECT GROUND CONNECTION
Disconnect connector from clutch switch.
Is there continuity between terminal 1 of wire harness side connector and body ground?

No →
- Open circuit in wire harness between terminal 1 and body ground.
- Body ground faulty.

Yes

INSPECT CLUTCH SWITCH OPERATION
Is clutch switch operation normal?
(See page BE–102)

No → Replace clutch switch.

Yes

Connect connector to clutch switch.

ECU

Disconnect connector from ECU and inspect connector on wire harness side as follows.

INSPECT CLUTCH SWITCH CIRCUIT
Is there continuity between terminal 11 and body ground with clutch pedal depressed?

No → Open circuit in wire harness between terminal 11 of ECU and terminal 2 of clutch switch.

Yes

Is there continuity between terminal 11 and body ground with clutch pedal released?

Yes → Short circuit in wire harness between terminal 11 of ECU and terminal 2 of clutch switch.

No

Replace ECU. Then recheck system.

INSPECTION OF NEUTRAL START SWITCH CIRCUIT

Turn ignition switch off.

NEUTRAL START SW

INSPECT GROUND CONNECTION
Disconnect connector from neutral start switch.
Is there continuity between terminal 1 of wire harness side connector and body ground?

No → Open circuit in wire harness between terminal 1 and body ground.

Yes

INSPECT NEUTRAL START SWITCH OPERATION
Is neutral start switch operation normal?
(See page BE–103)

No → Replace neutral switch.

Yes

Connect the connector to neutral start switch.

ECU

Disconnect connector– from ECU and inspect connector on wire harness side as follows.

INSPECT NEUTRAL START SWITCH CIRCUIT
Is there continuity between terminal 11 and body bround when shifted to ”N” and ”P” range?

No → Open circuit in wire harness between terminal 11 of ECU and terminal 2 of neutral start switch.

Yes

Replace ECU. Then recheck system.

J INSPECTION OF VACUUM CIRCUIT

Turn ignition switch off.

VACUUM HOSE

Are there cracks or other damage on the vacuum hose ?

Yes → Replace vacuum hose.

No

VACUUM SW

INSPECT VACUUM SWITCH CIRCUIT
Disconnect connector from vacuum switch.
Is there continuity terminal 2 of vacuum switch and body ground?

No →
- Open circuit in wire harness between terminal 2 and body ground.
- Body ground faulty.

Yes

INSPECT VACUUM SWITCH OPERATION
Is vacuum switch normal 1
(See page BE–103)

No → Replace vacuum switch.

Yes

VACUUM PUMP

INSPECT GROUND CONNECTION
Disconnect connector from vacuum pump.
Is there continuity between terminal 2 of wire harness side connector and body ground?

No →
- Open circuit in wire harness between terminal 2 and body ground.
- Body ground faulty.

Yes

INSPECT VACUUM PUMP OPERATION
Is vacuum pump operation normal?
(See page BE–103)

No → Replace vacuum pump.

Yes

Connect connector to vacuum switch and pump.

CONTINUED ON NEXT PAGE

CONTINUED FROM PREVIOUS PAGE

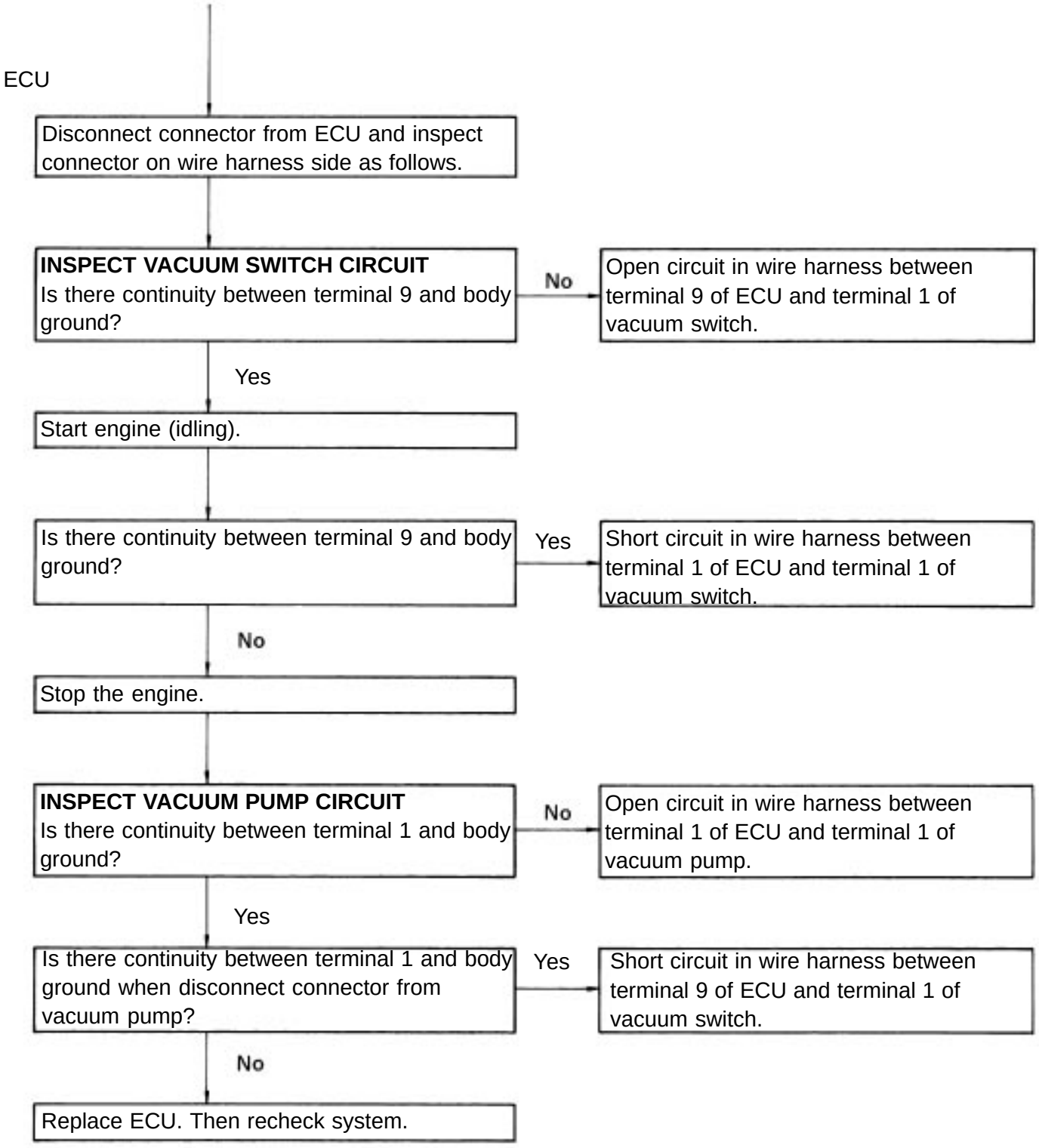

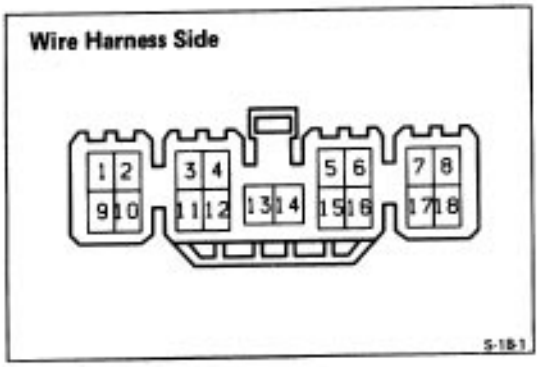

Parts Inspection

7. INSPECT ECU CIRCUIT

Disconnect the ECU and inspect the connector on wire harness side as shown in the below.

Connection or measure item	Check for	Tester connection	Condition	Specified valve
Stop F use	Voltage	16 – Body ground	Constant	Battery voltage
Stop Light Switch	Voltage	15 – Body ground	Brake pedal depressed	Battery voltage
			Brake pedal released	No voltage
Stop Light Switch and Release Valve	Resistance	2 – 14	Brake pedal released	Approx. 68 Ω
Control Valve	Resistance	4 – 14	Constant	Approx. 30 Ω
Main Switch	Voltage	10 – Body ground	Turn ignition switch and main switch on	Battery voltage
			Turn ignition switch and main switch off	No voltage
Main Switch (indicator circuit)	Voltage	3 – Body ground	Turn ignition switch and main switch on	Battery voltage
			Turn ignition switch and main switch off	No voltage
Control Switch (set/coast)	Continuity	5 – Body ground	Turn set/coast switch on	Continuity
			Turn set/coast switch off	No continuity
Control Switch (resume/accel)	Continuity	17 – Body ground	Turn resume/accel switch on	Continuity
			Turn resume/accel switch off	No continuity
Speed Sensor	Continuity	7 – Body ground	Vehicle moving slowly	1 pulse each 40 cm (15.75 in.)
Clutch Switch (M/T) or Neutral Start Switch (A/T)	Continuity	11 – Body ground	Clutch pedal depressed or shifted into ”N” range	Continuity
			Clutch pedal released or shifted into ”L”, ”2”, ”D” or ”R” range	No continuity
Parking Brake Switch	Voltage	12 – Body ground	Remove CHARGE fuse and ignition switch turned on with parking brake lever pulled up.	No voltage
			Remove CHARGE fuse and ignition switch turned on with parking brake lever released.	Battery voltage
Vacuum Switch	Continuity	9 – Body ground	Apply vacuum approx. 170 mmHg (6.69 in.Hg, 22.7 kPa)	No continuity
			No vacuum	Continuity
Vacuum Pump	Continuity	1 – Body ground	Constant	Continuity
Body Ground	Continuity	13 – Body ground	Constant	Continuity

If circuit is current, replace the cruise control ECU.

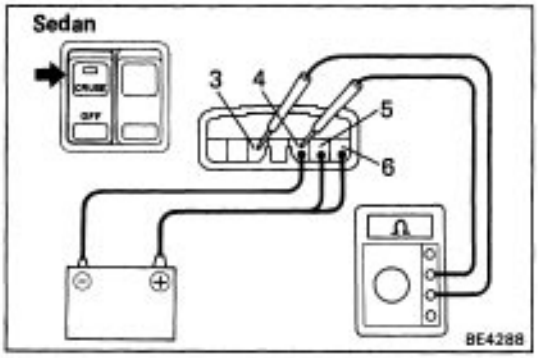

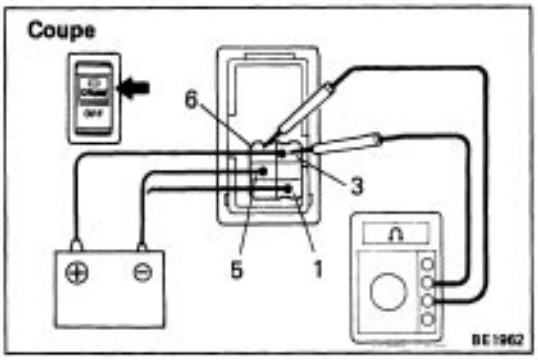

2. INSPECT SWITCHES

(Main Switch: Sedan)

(a) Connect the positive (+) lead from the battery to terminal 4 and the negative (–) lead to terminal 5 and 6.

(b) Check that there is continuity between terminals 3 and 4 with the main switch pushed ON, and check that the indicator light lights up.

(c) Check that there is no continuity between terminals 3 and 4 with the main switch pushed OFF.
If continuity is not as specified, replace the switch.

(Main Switch: Coupe)

(a) Connect the positive (+) lead from the battery to terminal 3 and the negative (–) lead to terminal 5 and 1.

(b) Check that there is continuity between terminals 3 and 6 with the main switch pushed ON, and check that the indicator light lights up.

(c) Check that there is no continuity between terminals 3 and 6 with the main switch pushed OFF.
If continuity is not as specified, replace the switch.

(Control Switch/Continuity)

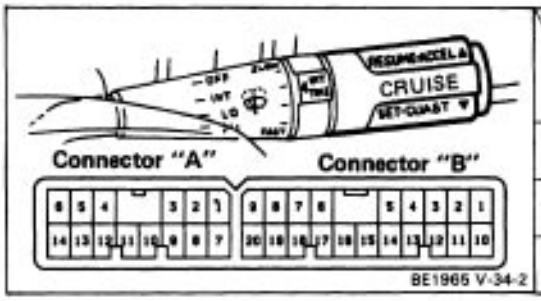

Terminal / Switch position	Connector "B" 5	16	17
RESUME/ACCEL		○——	——○
OFF			
SET/COAST	○——	——○	

(Stop Light Switch/Continuity)

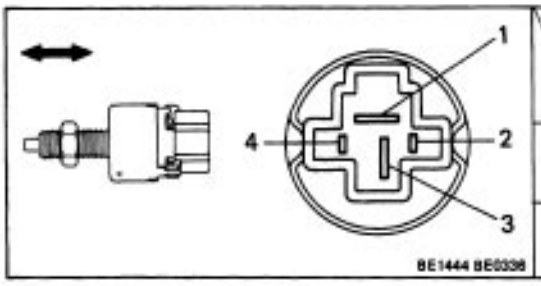

Terminal / Switch position	1	2	3	4
Switch free (Brake pedal depressed)		○——		——○
Switch pin pushed i n (Brake pedal released)	○——		——○	

(Clutch Switch/Continuity)

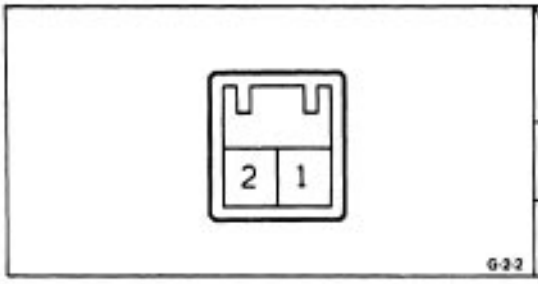

Terminal / Switch position	1	2
Switch free (Clutch pedal depressed)	○——	——○
Switch pin pushed in (Clutch pedal released)		

(Neutral Start Switch/Continuity)

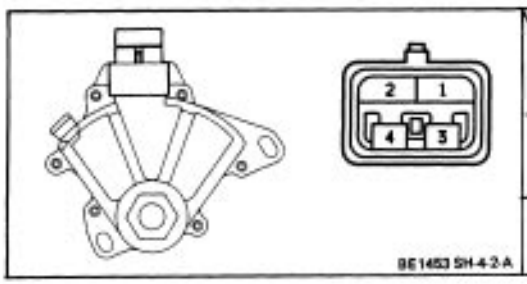

Terminal / Switch position	1	2	3	4
"P" or "N" range	○——	——○		
"R" range			○——	——○

If continuity is not as specified, replace the switch.

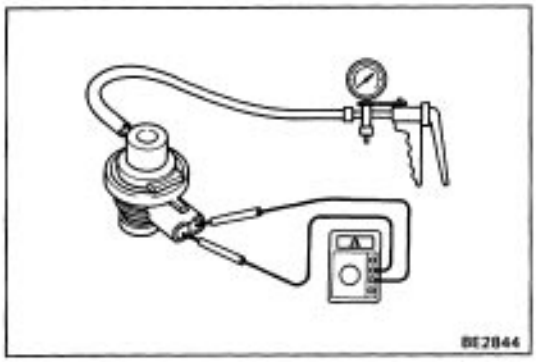

(Vacuum Switch)

(a) Check that there is no continuity between terminals with a vacuum of 170 ± 10 mmHg (6.69 ± 0.39 in.Hg, 22.7 ± 1.3 kPa) or above.

(b) Check that there is continuity between terminals with no vacuum.

If operation is not as specified, replace the switch.

(Parking Brake Switch)

See page BE–57.

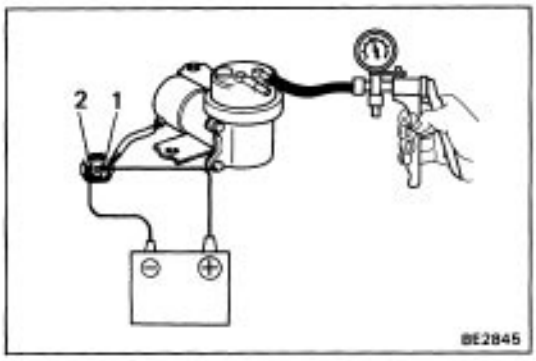

3. INSPECT VACUUM PUMP

(Operation)

(a) Connect a vacuum gauge to the ACT side of the pump.

(b) Connect the positive (+) lead from the battery to terminal 1 and the negative (–) lead to terminal 2.

(c) Check that there is the vacuum of 200 mmHg (7.87 in.Hg, 26.7 kPa) of above.

If operation is not as specified, replace the pump.

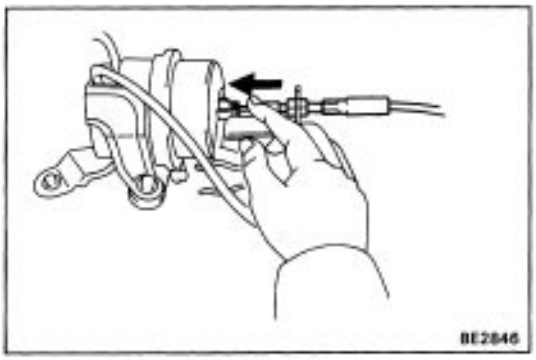

4. INSPECT ACTUATOR

(Check and adjustment)

(a) Check that the cables are properly installed on the carburetor, actuator and bellcrank of accel cable.

(b) Measure the cable stroke to where the throttle valve begins to open.

Standard: approx. within 10 mm (0.39 in.) with a slight amount of freeplay.

If freeplay is not as specified, adjust the adjusting nut of the control cable.

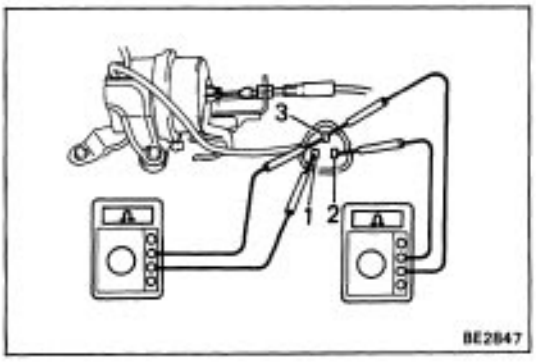

(Resistance)

Measure the resistance value between terminals as follows.

Resistance: 2 – 3 about 30Ω

1 – 3 about 68Ω

If the resistance value is not as specified, replace the actuator.

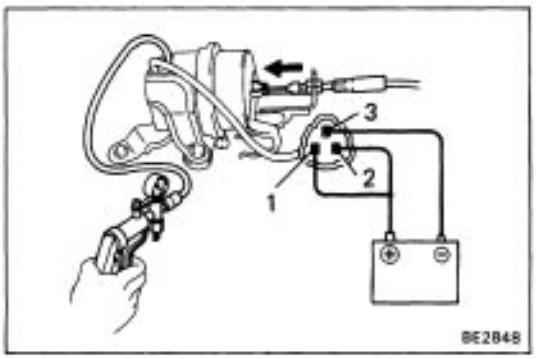

(Operation)

(a) Connect the positive (+) lead from battery to terminals 1 and 2, and the negative (–) lead to terminal 3.

(b) Slowly apply vacuum from 0 – 300 mmHg (0 – 11.81 in.Hg, 0 – 40.0 kPa), and check that the control cable can be pulled smoothly.

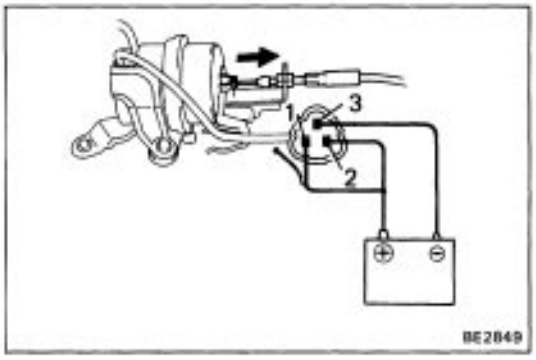

(c) Disconnect terminal 1 or 2, check that the control cable returns to its original position and the vacuum returns to 0 mmHg (0 in.Hg, 0 kPa).
If operation is not as specified, replace the actuator.

5. INSPECT SPEED SENSOR

See page BE–48.

THEFT DETERRENT SYSTEM
Wiring Diagram

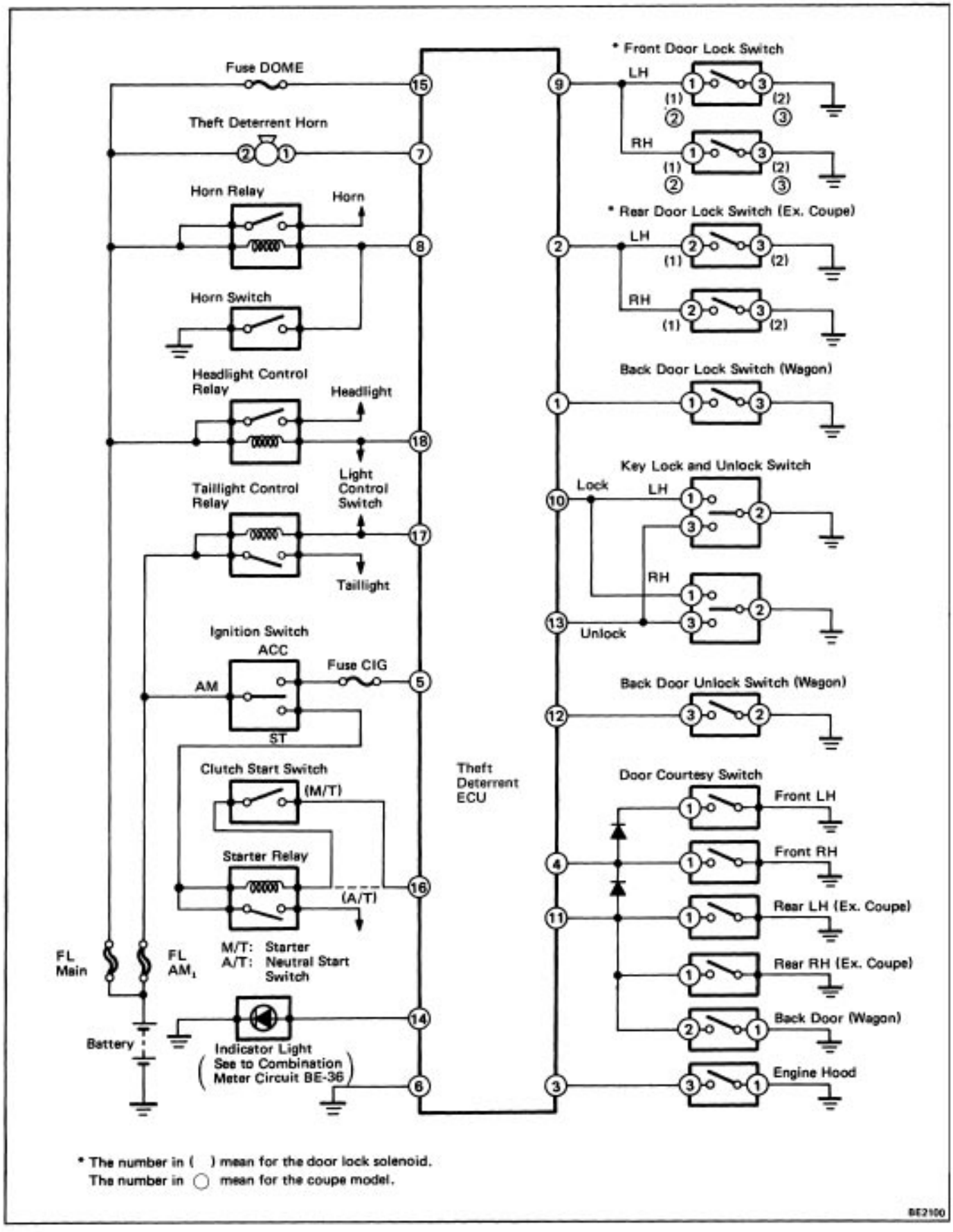

Connector

Theft Deterrent ECU

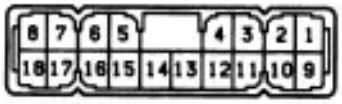

Door Key Lock and Unlock Switch



Door Lock Switch (w/o Power Door Lock)



Door Lock Switch (w/ Power Door Lock)

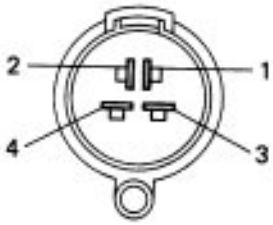

Ignition Switch

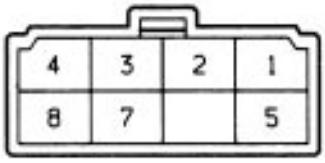

Theft Deterrent Horn

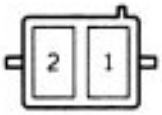

Door Courtesy Switch (Engine Hood)



(Back Door)



(Others)



Headlight Control Relay

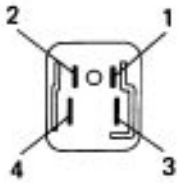

Taillight Control Relay

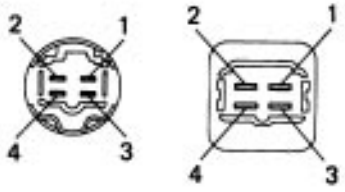

Starter Relay

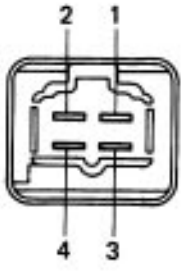

S-18-2-A IJ-3-1 BE2114
BE1244 H-8-2 BE1254
BE1249 G-2-2 S-1-1-8
BE1838 BE1647 BE1575 ST0280

Troubleshooting

- Check that the operation of other systems (Door lock control system etc.) are normal.
- When the system is not operating, lower the door glass and confirm under what conditions it does not operate, or malfunctions.

Problem	Inspection Item	Section
Theft deterrent system can not be set.	Power source circuit	A
Indicator light does not light even if theft deterrent system operated.	Indicator light circuit	B
Theft deterrent system does not operate when front doors opened.	Front doors lock switch circuit Front doors courtesy switch circuit	C F
Theft deterrent system does not operate when rear doors opened.	Rear doors lock switch circuit Rear doors courtesy switch circuit	D F
Theft deterrent system does not operate when back door opened.	Back door lock switch circuit Back door courtesy switch circuit	E F
Theft deterrent system does not operate when engine hood opened.	Engine hood courtesy switch circuit	F
Theft deterrent system does not cancel when front door unlocked with key.	Front door key lock & unlock switch circuit	G
Theft deterrent system does not cancel when back door unlocked with key.	Back door key unlock switch circuit	H
Theft deterrent system does not cancel when ignition switch turned ON or ACC position.	Ignition switch circuit	I
Starter cut system does not operate even if theft deterrent system operated.	Starter cut system circuit.	J
Starter cut system does not cancel even if theft deterrent system canceled.	Starter cut system circuit.	J
Horn does not blow even if theft deterrent system operated.	Theft deterrent horn circuit	K
Headlights do not flash even if theft deterrent system operated.	Headlight control relay circuit	L
Taillights do not flash even if theft deterrent system operated.	Taillight control relay circuit	M
Theft deterrent horn blows even if system is not set.	Theft deterrent horn circuit	K
Headlights flash even if system is not set.	Headlight control relay circuit	L
Taillights flash even if system is not set.	Taillight control relay circuit	M

A INSPECTION OF POWER SOURCE CIRCUIT

Turn ignition switch off.

Is DOME fuse normal?

No → Replace fuse. Is operation normal?

No → Short circuit in wire harness between fuse and terminal 15 of ECU.

Yes → Fuse faulty.

Yes

ECU

Disconnect ECU connector and inspect connector on wire harness side as follows.

INSPECT POWER SOURCE
Is there battery voltage between terminal 15 and ground.

No → Open circuit in wire harness between fuse and terminal 15 of ECU.

Yes

INSPECT GROUND CONNECTION
Is there continuity between terminal6 and ground.

No →
- Open circuit i n wire harness between terminal 6 of ECU and ground.
- Ground faulty.

Yes

INSPECT FOLLOWING SECTIONS:

Front Door Lock Switch Circuit	Section C
Rear Door Lock Switch Circuit	Section D
Back Door Lock Switch Circuit	Section E
Door and Engine Hood Courtesy Switch Circuit . . .	Section F
Front Door Key Lock & Unlock Switch Circuit . . .	Section G
Back Door Key Unlock Switch Circuit	Section H
Ignition Switch Circuit	Section I

Yes

Replace ECU. Then recheck system.

B INSPECTION OF INDICATOR LIGHT CIRCUIT

Turn ignition switch off.

ECU

Disconnect ECU connector and inspect connector on wire harness side as follows.

INSPECT INDICATOR LIGHT CIRCUIT
Connect the positive N lead from the ohmmeter to terminal 14 and the negative (–) lead from the ohmmeter to ground.
* Is there continuity between terminal 14 and ground?

No → Open circuit in indicator light circuit.

Yes

Replace ECU. Then recheck system.

*: This circuit includes the LED. If the circuit shows no continuity, change the positive and negative probes and recheck the circuit.

C INSPECTION OF FRONT DOOR LOCK SWITCH CIRCUIT

Turn ignition switch off.

ECU

Disconnect ECU connector and inspect connector on wire harness side as follows.

INSPECT LH DOOR LOCK SWITCH CIRCUIT
Locked RH front door.
* Is there continuity between terminal 9 and ground with LH front door unlocked?

No → Open circuit in LH door lock switch circuit.

Yes

INSPECT RH DOOR LOCK SWITCH CIRCUIT
Locked LH front door.
* Is there continuity between terminal 9 and ground with RH front door locked?

No → Open circuit in RH door lock switch circuit.

Yes

Replace ECU. Then recheck system.

* : (w/ Power Door Lock)
This circuit includes the diode. If the circuit shows no continuity, change the positive and negative probes and recheck the circuit.

D INSPECTION OF REAR DOOR LOCK SWITCH CIRCUIT

Turn ignition switch off.

ECU

Disconnect ECU connector and inspect connector on wire harness side as follows.

INSPECT LH DOOR SWITCH CIRCUIT
Locked RH rear door.
*Is there continuity between terminal 2 and ground with LH rear door unlocked?

No → Open circuit in LH door lock switch circuit.

Yes

INSPECT RH DOOR LOCK SWITCH CIRCUIT
Close LH rear door.
*Is there continuity between terminal 2 and ground with RH rear door opened?

No → Open circuit in RH door lock switch circuit.

Yes

Replace ECU. Then recheck system.

* : (w/ Power Door Lock)
This circuit includes the diode. If the circuit shows no continuity, change the positive and negative probes and recheck the circuit.

E INSPECTION OF BACK DOOR LOCK SWITCH CIRCUIT

Turn ignition switch off.

ECU

Disconnect ECU connector and inspect connector on wire harness side as follows.

INSPECT BACK DOOR LOCK SWITCH CIRCUIT
Is there continuity between terminal 1 and ground with back door unlocked?

No → Open circuit in back door lock switch circuit.

Yes

Replace ECU. Then recheck system.

F INSPECTION OF DOOR AND HOOD COURTESY SWITCH CIRCUIT

Turn ignition switch off.

ECU

Disconnect ECU connector– and inspect connector on wire harness side as follows.

Front Door

INSPECT LH FRONT DOOR COURTESY SWITCH CIRCUIT
Close RH front door.
*Is there continuity between terminal 4 and ground with LH front door opened?

No → Open circuit in LH front door courtesy switch circuit.

Yes

INSPECT RH FRONT DOOR COURTESY SWITCH CIRCUIT
Close LH front door.
Is there continuity between terminal 4 and ground with R H front door opened?

No → Open circuit in R H front door courtesy switch circuit.

Yes

Rear Door

INSPECT LH REAR DOOR COURTESY SWITCH CIRCUIT
Close R H rear door and back door.
Is there continuity between terminal 11 and ground with LH rear door opened?

No → Open circuit in LH rear door courtesy switch circuit.

Yes

INSPECT RH REAR DOOR COURTESY SWITCH CIRCUIT
Close LH rear door and back door.
Is there continuity between terminal 11 and ground with RH rear door opened?

No → Open circuit in RH rear door courtesy switch circuit.

Yes

Back Door

INSPECT BACK DOOR COURTESY SWITCH CIRCUIT
Close front and rear doors.
Is there continuity between terminal 11 and ground with back door opened?

No → Open circuit in rear door courtesy switch circuit.

Yes

Engine Hood

INSPECT ENGINE HOOD COURTESY SWITCH CIRCUIT
Is there continuity between terminal 3 and ground?

No → Open circuit in engine hood courtesy switch circuit.

Yes

Replace ECU. Then recheck system.

G INSPECTION OF FRONT DOOR KEY LOCK & UNLOCK SWITCH CIRCUIT

Turn ignition switch off.

ECU

Disconnect ECU connector and inspect connector on wire harness side as follows.

LH FRONT DOOR

INSPECT KEY LOCK SWITCH CIRCUIT
Is there continuity between terminal 10 and ground with LH front door locked with key?

No → Open circuit in LH front door key lock switch circuit.

Yes

Is there continuity between terminal 10 and ground with LH front door unlocked with key?

Yes → Short circuit in LH front door key lock switch circuit.

No

INSPECT KEY UNLOCK SWITCH CIRCUIT
Is there continuity between terminal 13 and ground with LH front door unlocked with key?

No → Open circuit in LH front door key unlock switch circuit.

Yes

Is there continuity between terminal 13 and ground with LH front door locked with key?

Yes → Short circuit in LH front door key lock switch circuit.

RH FRONT DOOR No

INSPECT KEY LOCK SWITCH CIRCUIT
Is there continuity between terminal 10 and ground with R H front door locked with key?

No → Open circuit in RH front door key lock switch circuit.

Yes

Is there continuity between terminal 10 and ground with RH front door unlocked with key?

Yes → Short circuit in RH front door key lock switch circuit.

No

INSPECT KEY UNLOCK SWITCH CIRCUIT
Is there continuity between terminal 13 and ground with R H front door unlocked with key?

No → Open circuit in RH front door key unlock switch circuit.

Yes

Is there continuity between terminal 13 and ground with RH front door locked with key?

Yes → Short circuit in RH front door key lock switch circuit.

No

Replace ECU. Then recheck system.

H INSPECTION OF BACK DOOR KEY UNLOCK SWITCH CIRCUIT

Turn ignition switch off.

ECU

Disconnect ECU connector and inspect connector on wire harness side as follows.

INSPECT BACK DOOR KEY UNLOCK SWITCH CIRCUIT
Is there continuity between terminal 12 and ground with back door locked with key?

Yes → Short circuit in back door key unlock switch circuit.

No

Is there continuity between terminal 12 and ground with back door unlocked with key?

No → Open circuit in back door key unlock switch circuit.

Yes

Replace ECU. Then recheck system.

INSPECTION OF IGNITION SWITCH CIRCUIT

Turn ignition switch to ON or ACC position.

Is CIG fuse normal?

No → Replace fuse.
Is operation normal?

No → Short circuit in wire harness between fuse and terminal 5 of ECU.

Yes → Fuse faulty.

Yes

_CU

Disconnect ECU connector and inspect connector on wire harness side as follows.

INSPECT IGNITION SWITCH CIRCUIT
Is there battery voltage between terminal 5 and ground when ignition switch turned to ON or ACC?

No → Open circuit in wire harness between fuse and terminal 5 of ECU.

Yes

Replace ECU. Then recheck system.

J INSPECTION OF STARTER CUT SYSTEM CIRCUIT

Turn ignition switch off.

ECU

Disconnect ECU connector and inspect connector on wire harness side as follows.

HINT: If starter does not operate, even when system is canceled, before checking the circuit, use the key to turn the front door lock to the unlock position and recheck starter operation.

INSPECT STARTER CUT SYSTEM CIRCUIT
Depress clutch pedal. (M/T only)
Is there battery voltage between terminal 16 and ground with ignition switch turned to ST?

No → Short or open circuit in starter relay circuit.

Yes

Replace ECU. Then recheck system.

K INSPECTION OF THEFT DETERRENT HORN CIRCUIT

Turn ignition switch off.

THEFT DETERRENT HORN

INSPECT THEFT DETERRENT HORN OPERATION
Disconnect connector from horn.
Is horn operation normal? (See page BE–118)

No → Replace theft deterrent horn.

Yes

ECU

Disconnect computer connector and inspect connector on wire harness side as follows.

INSPECT THEFT DETERRENT HORN CIRCUIT
Is there battery voltage between terminal 7 and ground.

No → Open or short circuit in theft deterrent horn circuit.

Yes

INSPECT STANDARD EQUIPMENT HORN CIRCUIT
Is there battery voltage between terminal 8 and ground.

No → Open or– short circuit in standard equipment horn circuit.

Yes

Replace ECU. Then recheck system.

L INSPECTION OF HEADLIGHT CONTROL RELAY CIRCUIT

Turn ignition switch off.

ECU

Disconnect ECU connector and inspect connector on wire harness side as follows.

INSPECT HEADLIGHT CONTROL RELAY CIRCUIT
Is there battery voltage between terminal 18 and ground?

No → Open or short circuit in headlight control relay circuit.

Yes

INSPECT HEADLIGHT CIRCUIT
(See page BE–25)

No → Replace parts necessary.

Yes

Replace ECU. Then recheck system.

M INSPECTION OF TAILLIGHT CONTROL RELAY CIRCUIT

Turn ignition switch off.

_CU

Disconnect ECU connector and inspect connector on wire harness side as follows.

INSPECT TAILLIGHT CONTROL RELAY CIRCUIT
Is there battery voltage between terminal 17 and ground?

No → Open or short circuit in taillight control relay circuit.

Yes

INSPECT TAILLIGHT CIRCUIT
(See page BE–25)

No → Replace parts as necessary.

Yes

Replace ECU. Then recheck system.

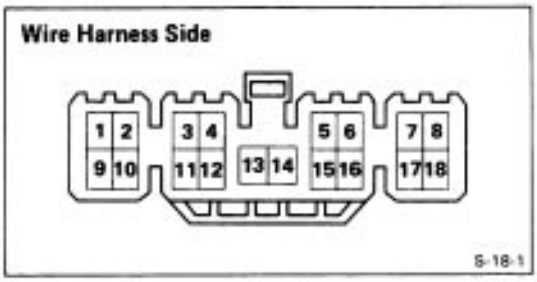

Parts Inspection

1. INSPECT THEFT DETERRENT ECU CIRCUIT

Disconnect the ECU and inspect the connector on the wire harness side as shown in the chart below.

Check for	Tester connection	Condition	Specified Value
Continuity	* 1 – Ground w/ power door lock	Turn door lock switch ON	Continuity
		Turn door lock switch OFF	No continuity
	1 – Ground w/o power door lock	Back door lock knob unlocked	Continuity
		Back door lock knob locked	No continuity
	* 2 – Ground w/ power door lock	Turn door lock switch ON	Continuity
		Turn door lock switch OFF	No continuity
	2 – Ground w/o power door lock	Rear door lock lever unlocked	Continuity
		Rear door lock lever locked	No continuity
	3 – Ground	Engine hood opened	Continuity
		Engine hood closed	No continuity
	* 4 – Ground	LH or RH front door opened	Continuity
		LH or RH front door closed	No continuity
Voltage	5 – Ground	Turn ignition switch to ACC	Battery voltage
Continuity	6 – Ground	Constant	Continuity
Voltage	7 – Ground	Constant	Battery voltage
	8 – Ground	Constant	Battery voltage
Continuity	* 9 – Ground w/ power door lock	Turn door lock switch ON	Continuity
		Turn door lock switch OFF	No continuity
	9 – Ground w/o power door lock	LH or– RH front door lock lever unlocked	Continuity
		LH or RH front door lock lever locked	No continuity
	10 – Ground	LH or RH front door locked with key	Continuity
		Other positions	No continuity
	*11 – Ground	LH or R H front or rear door or back door opened	Continuity
		All doors closed	No continuity
	12 – Ground	Back door unlocked with key	Continuity
		Other positions	No continuity
	13 – Ground	LH or R H front door unlocked with key	Continuity
		Other positions	No continuity
	*14 – Ground	Constant	Continuity
Voltage	15 – Ground	Constant	Battery voltage
	16 – Ground	Turn ignition switch to ST with depress clutch pedal (M/T)	Battery voltage
	17 – Ground	Turn light control switch OFF	Battery voltage
	18 – Ground	Turn light control switch OFF	Battery voltage

*: This circuit includes the LED or diode. If the circuit shows no continuity, change the positive and negative probes and recheck the circuit.

If circuit is correct, replace the theft deterrent ECU.

2. INSPECT SWITCHES

(Front Door LH Key Lock & Unlock Switch)

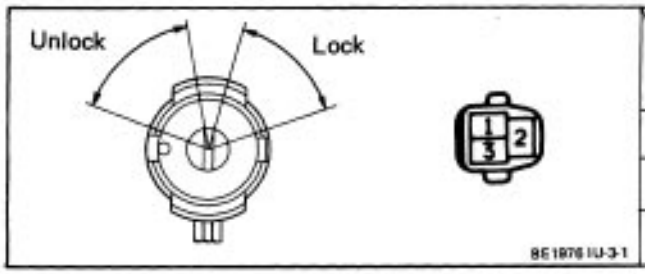

Terminal / Condition	1	2	3
Lock	○	○	
Neutral			
Unlock		○	○

(Front Door RH Key Lock & Unlock Switch)

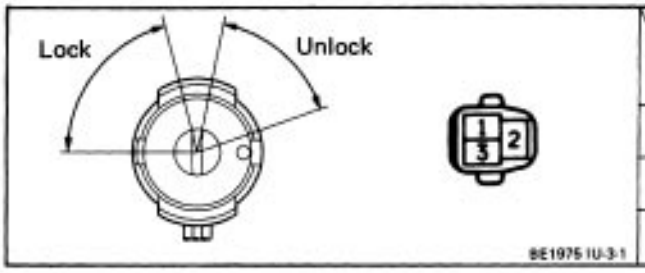

Terminal / Condition	1	2	3
Lock	○	○	
Neutral			
Unlock		○	○

(Back Door Key Unlock Switch)

See to Front Door RH Key Lock & Unlock Switch.

(Door Lock Switch : w/o Power Door Lock)

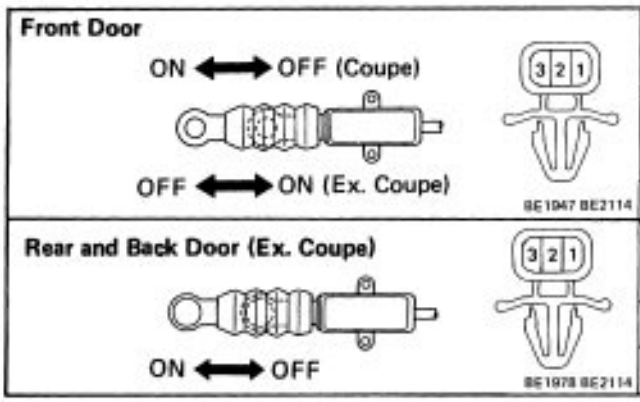

Terminal / Condition		1	2	3
ON (door unlocked)	Coupe		○	○
	Ex. Coupe	○		○
OFF (door locked)				

Terminal / Condition	1	2	3
ON (door unlocked)		○	○
OFF (door locked)			

w power door lock: See to Door lock Solenoid (next page).

(Engine Hood Courtesy Switch)

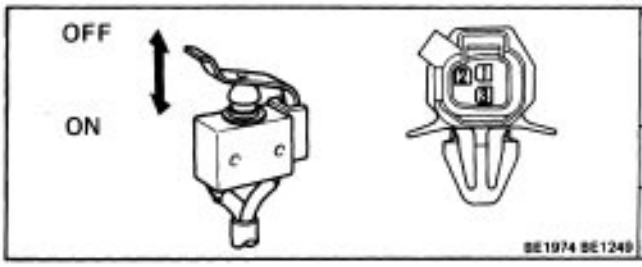

Terminal / Condition	1	3
ON (Opened)	○	○
OFF (Closed)		

If continuity is not as specified, replace the switch.

(Back Door Courtesy Switch)
See step on page BE–60.
(Front Door Courtesy Switch)
See step on page BE–60.
(Ignition Switch)
See step on page BE–15.
If operation is not as specified, replace the switch.

3. INSPECT RELAY
(Headlight Control Relay)
See step 2 on page BE–26.
(Taillight Control Relay)
See step 2 on page BE–26.
(Starter Relay)
See starting system on page ST–15.

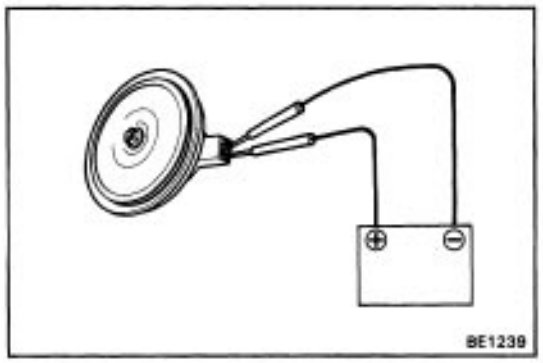

4. INSPECT THEFT DETERRENT HORN
(Operation)
(a) Connect the positive (+) lead from the battery to terminal 1 and the negative (–) lead to terminal 2.
(b) Check that the horn blows.
If operation is not as specified, replace the horn.

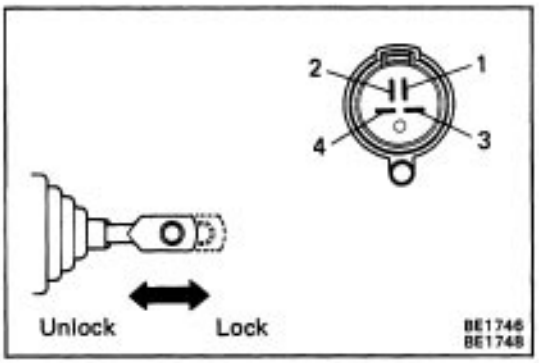

5. INSPECT DOOR LOCK SOLENOID (DOOR LOCK SWITCH)
(Front Door Solenoid/Door Lock Switch Operation)
(a) Connect the positive (+) lead from the battery to terminal 3 and the negative (–) lead to terminal 4.
(b) Check that the solenoid operates in the lock (push) direction and that there is continuity between terminals 1 and 2.
(c) Connect the positive (+) lead from the battery to terminal 4 and the negative (–) lead to terminal 3.
(d) Check that the solenoid operates in the unlock (pull) direction and that there is no continuity between terminals 1 and 2.
(Rear Door Solenoid/Door Lock Switch Operation)
See to Front Door Solenoid/Door Lock Switch Operation.

6. INSPECT THEFT DETERRENT INDICATOR LIGHT
(See pages BE–45, 47)

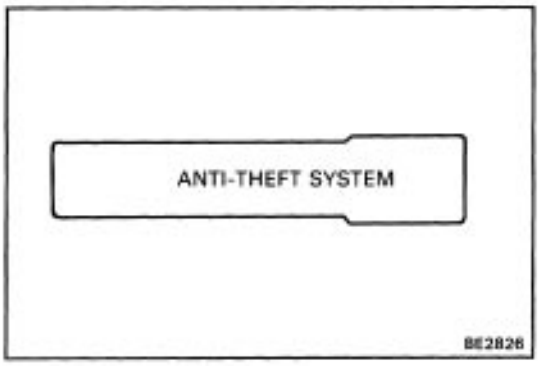

AUDIO SYSTEM
System Description
Anti–Theft

System (USA only)
The anti–theft system is only provided for audio systems equipped with and Acoustic Flavor function.
HINT: The words ”ANTI–THEFT SYSTEM” are displayed on the cassette tape slot cover.
For operation instructions for the anti–theft system, please consult the audio system section in the Owner’s Manual (hereafter called O/M).

1. SETTING SYSTEM

The system is in operation once the customer has pushed the required buttons and entered the customer selected 3–digit ID number.
(Refer to the O/M section, ”Setting the anti–theft system”)
HINT:

- When the audio system is shipped the ID number has not been input, so the anti–theft system is no in operation.
- If the ID number has not been input, the audio system remains the same as a normal audio system.

2. ANTI–THEFT SYSTEM OPERATION

If the normal electrical power source (connector or battery terminal) is cut off, the audio system becomes inoperable, even if the power supply resumes.

3. CANCELLING SYSTEM

The ID number chosen by the customer is input cancel the anti–theft system.
(Refer to the O/M section, ”If the system is activated”)
HINT: To change or cancel the ID number, please refer to the O/M section, ”Cancelling the system”

Troubleshooting

HINT: For audio systems with anti–theft system, troubleshooting items marked (*) indicate that ”Troubleshooting for ANTI–THEFT SYSTEM” should be carried out first.

No.	Problem		
1.	DEAD RADIO AND TAPE PLAYER	* (a)	No power to radio or tape player, or power but no sound.
		(b)	Tape player okay but no sound from AM and FM or either one.
		(c)	No sound from one speaker.
2.	FAINT RECEPTION	—	——
3.	BAD SOUND QUALITY	(a)	Sound quality bad when radio played.
		(b)	Sound quality bad when tape player played.
4.	DEFECTIVE AUTO–SEARCH MECHANISM	—	

Troubleshooting for ANTI–THEFT SYSTEM

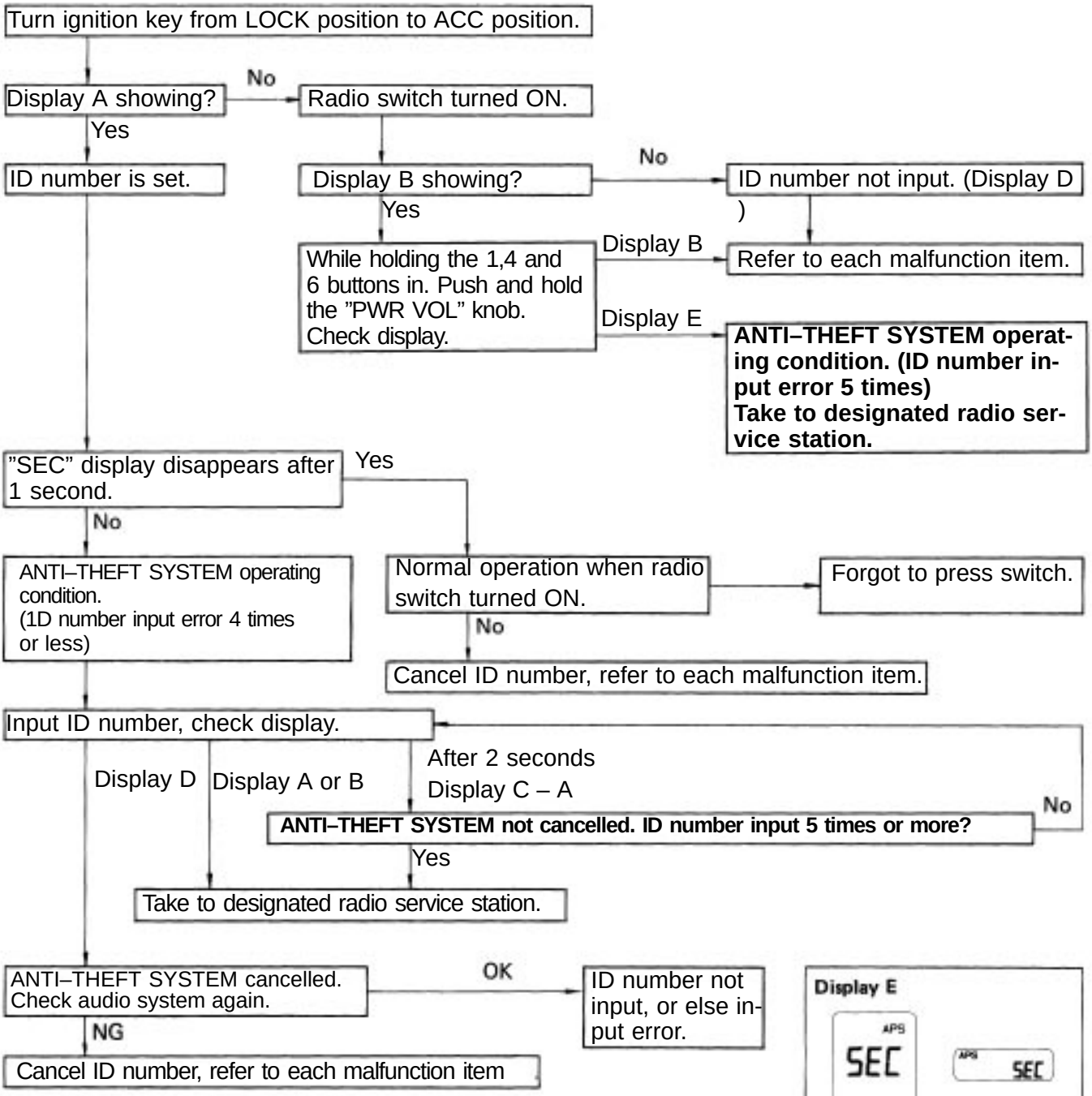

(Liquid Crystal Display (LCD) for Audio System)

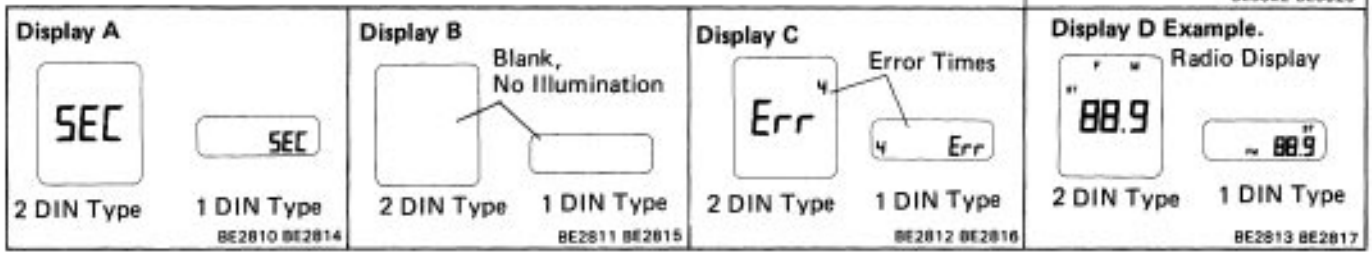

HINT:

- Refer to O/M for operation details of ANTI–THEFT SYSTEM.
- When the ID numberer h been cancelled, reset the same number after completing the operation, or inform the customer that it has been cancelled.

DESCRIPTION OF SYMBOLS

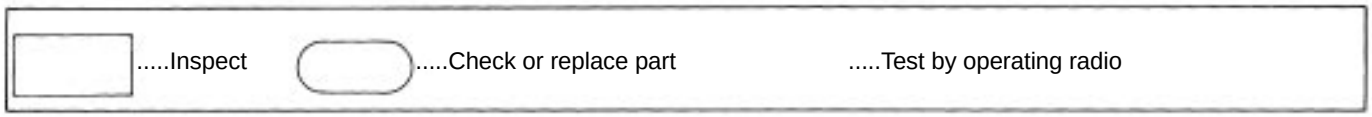

1. DEAD RADIO AND TAPE PLAYER

(a) No power to radio or tape player, or power but no sound.

Possible causes:

- Blown RADIO fuse
- Short circuit or broken wire in power source wire harness
- Loose connectors behind radio and tape player
- Loose speaker connector
- Defective speaker
- Broken wire in speaker wire harness
- Improperly installed radio or tape player
- Defective radio or tape player

TEST 1

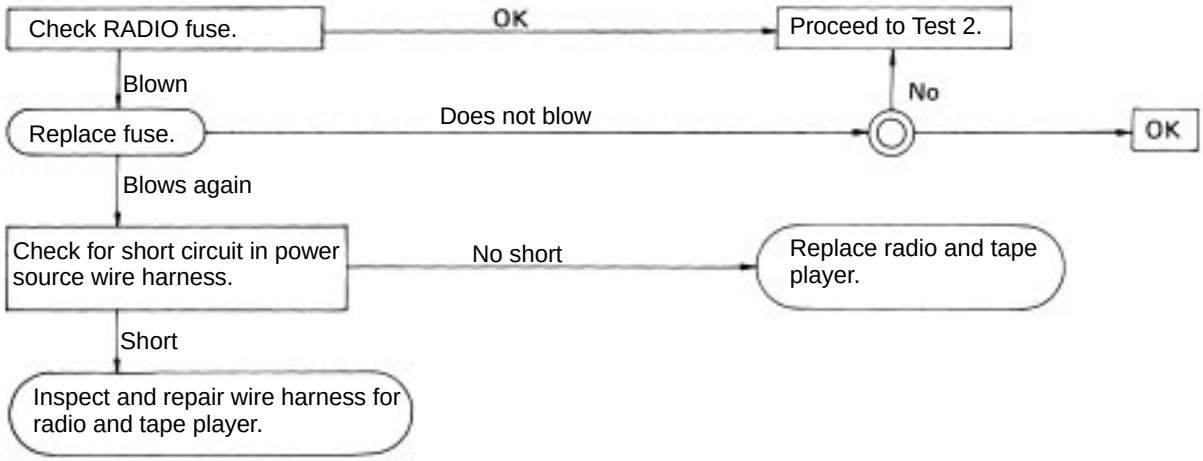

TEST 2

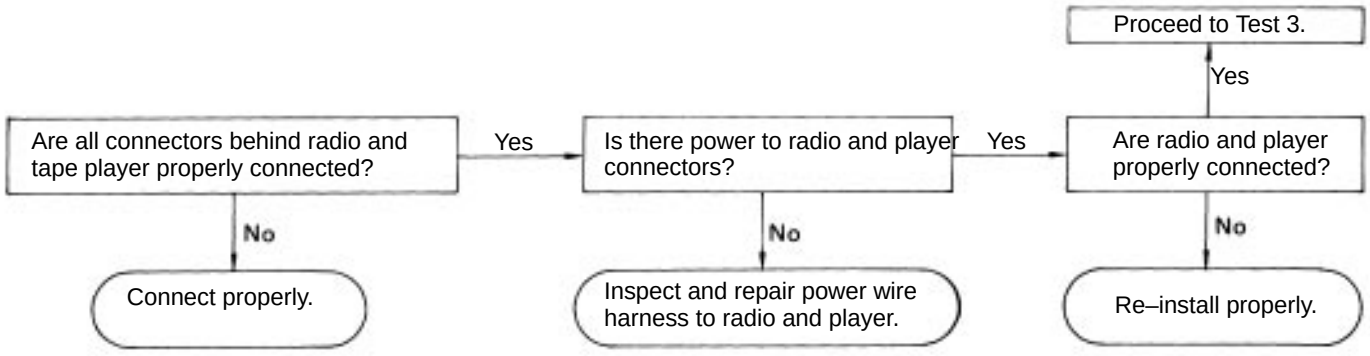

TEST 3

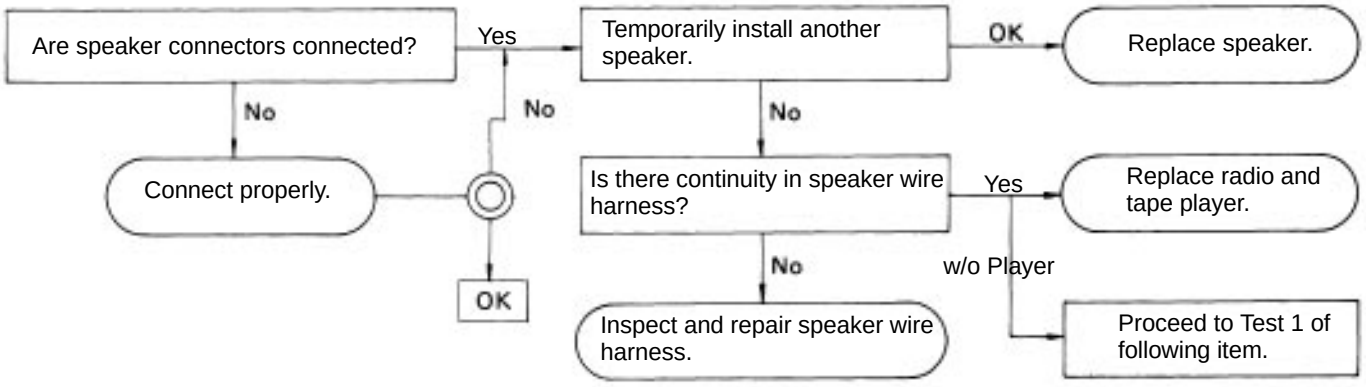

(b) Tape player okay but no sound from AM and FM or either one.

Possible causes:

- Antenna disconnected
- Antenna plug not properly connected
- Defective antenna
- Defective antenna cable
- Defective radio or tape player
- Blown RADIO fuse
- Short circuit or broken wire in wire harness for back–up power source

TEST 1

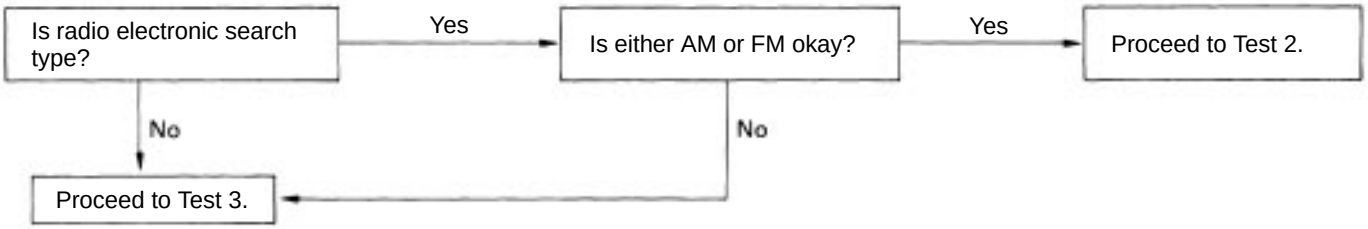

TEST 2

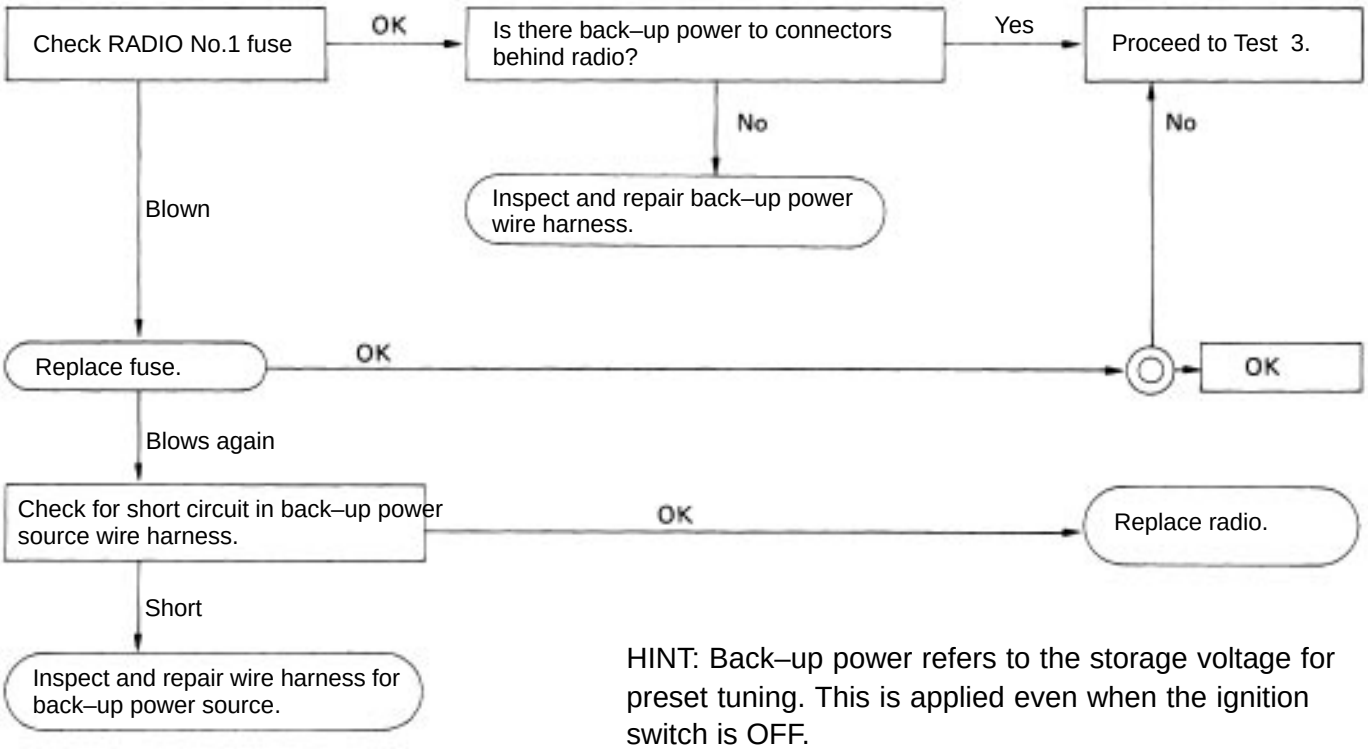

HINT: Back–up power refers to the storage voltage for preset tuning. This is applied even when the ignition switch is OFF.

TEST 3

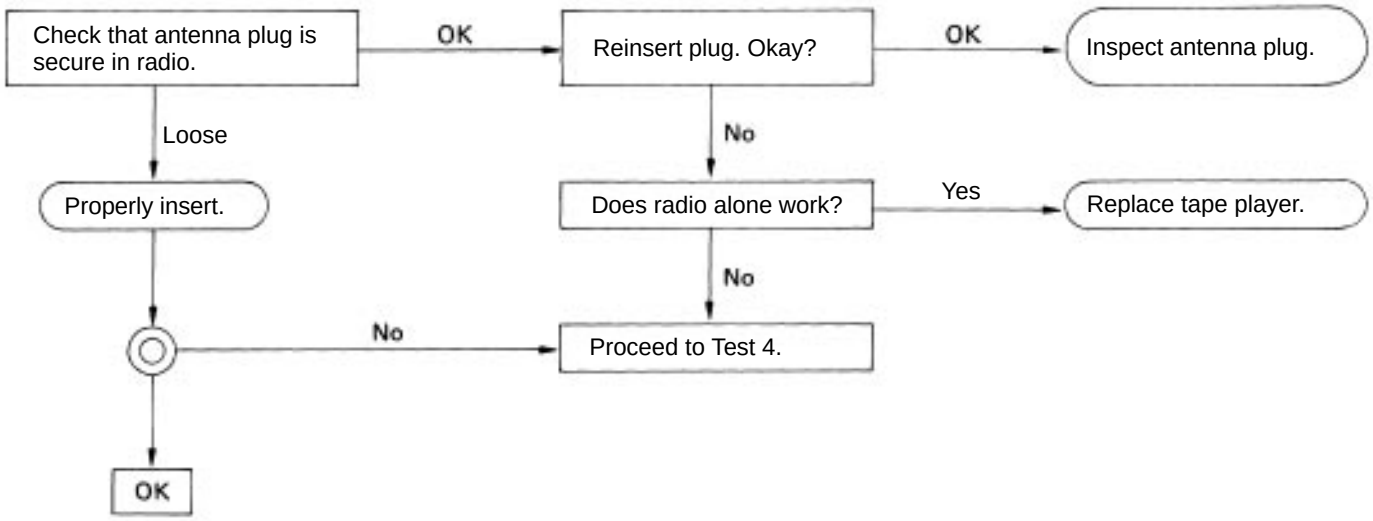

TEST 4

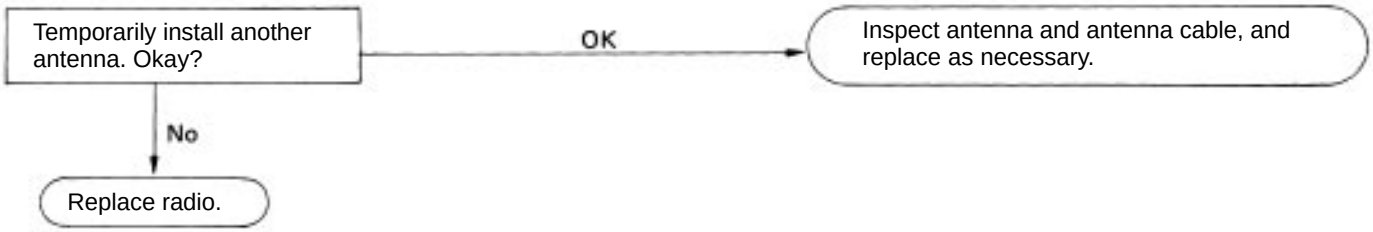

(c) No sound from one speaker.
Possible causes:

- Loose speaker connector
- Broken wire in speaker wire harness
- Defective speaker
- Defective radio and tape player

TEST 1

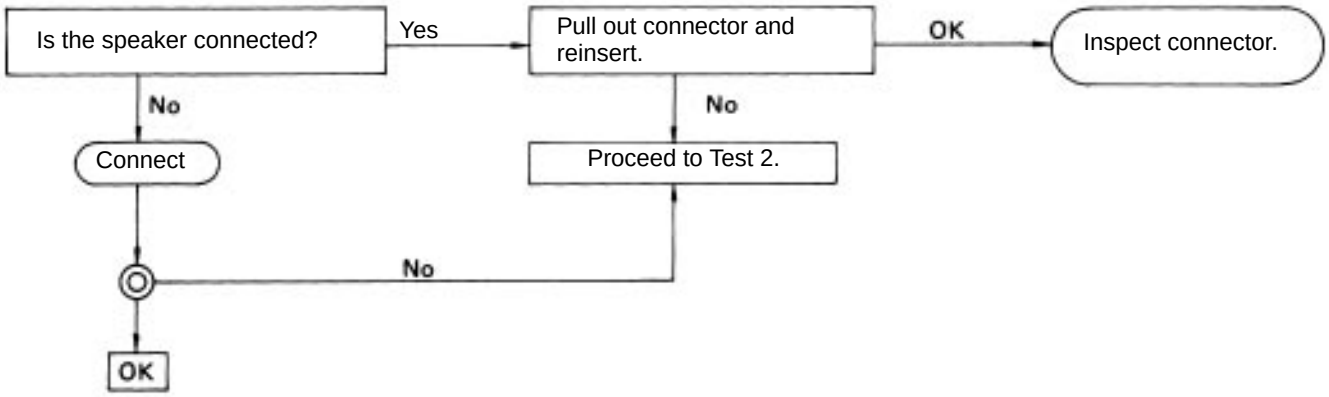

TEST 2

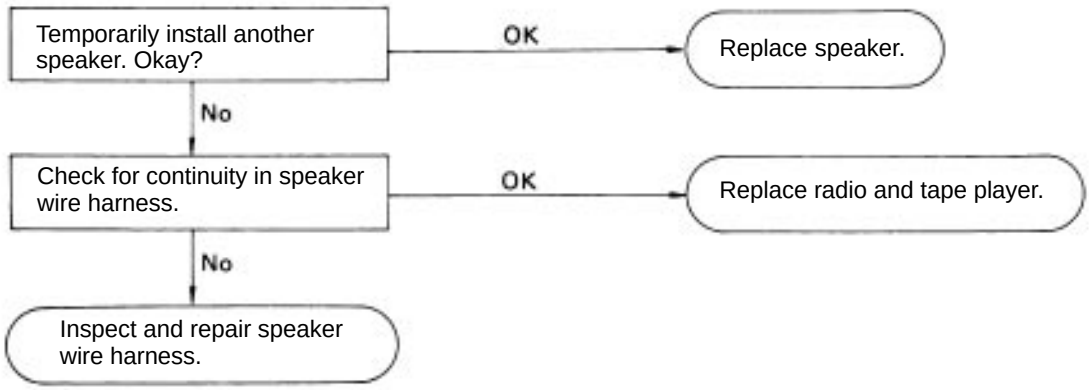

2. FAINT RECEPTION

Possible causes:

- Incorrectly adjusted antenna trimmer
- Defective antenna or cable
- Defective speaker
- Defective radio

TEST

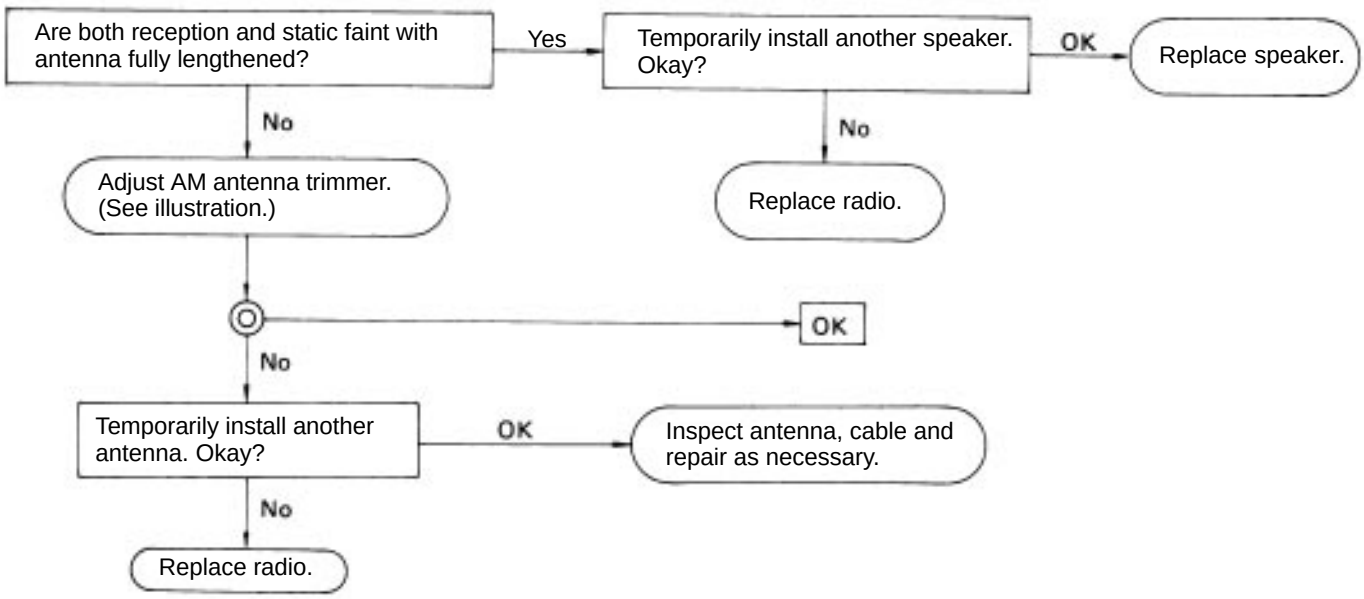

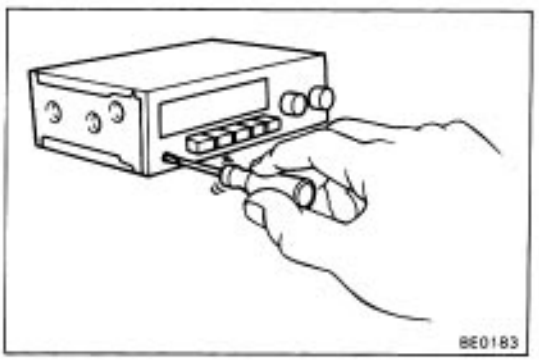

(Ex. Electronic Search type)

HINT: Adjustment of the antenna trimmer.

(a) Fully lengthen antenna.

(b) With volume and tone at maximum, turn the dial to around 1,400 kHz where there is no reception.

(c) Adjust the trimmer to where static is loudest.

3. BAD SOUND QUALITY

(a) Sound quality bad when radio played.

Possible causes:

- Multipath interference or excessive interception
- Tuner dial not synchronized with station
- Defective antenna and/or cable
- Speaker improperly installed
- Vibration sound from components near speaker
- Defective speaker
- Defective radio

TEST 1

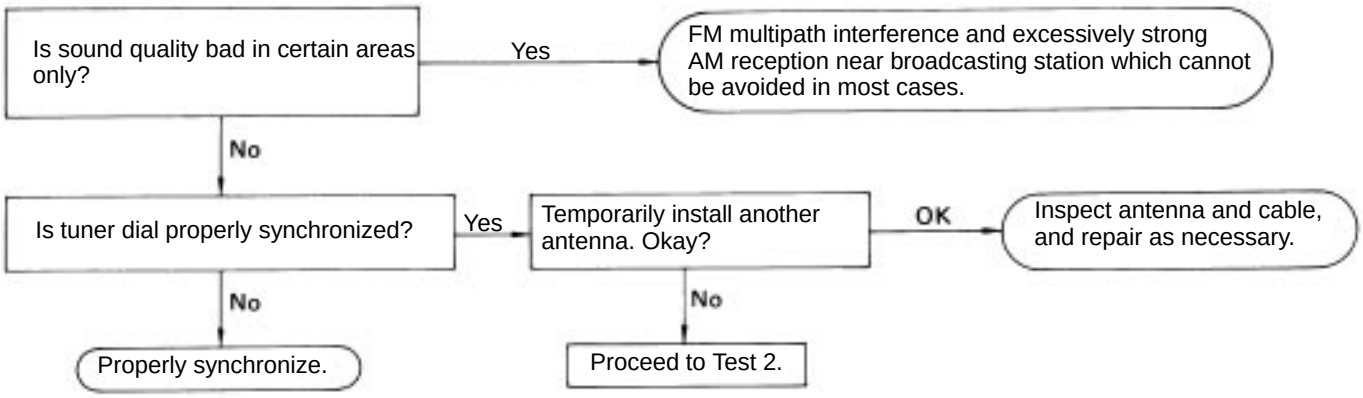

TEST 2

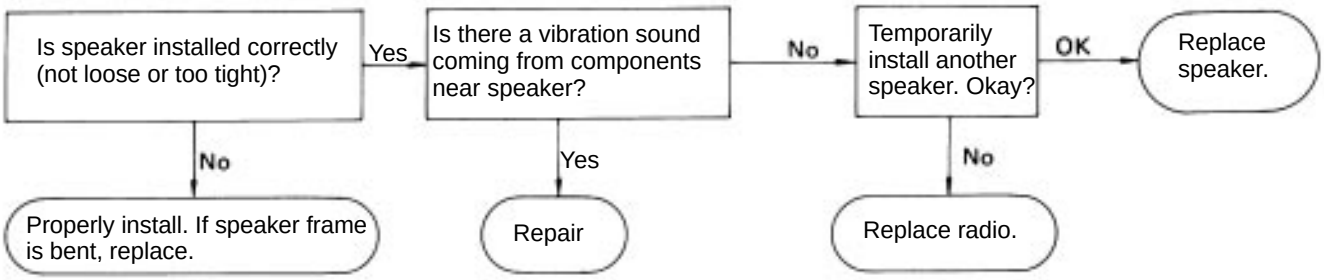

HINT: FM distortion tends to increase sharply if tuner is not synchronized.

(b) Sound quality bad when tape player played.

Possible causes:

- Bad tape
- Dirty head
- Incorrectly installed speaker
- Vibration noise from around speaker
- Defective speaker
- Defective tape player

TEST 1

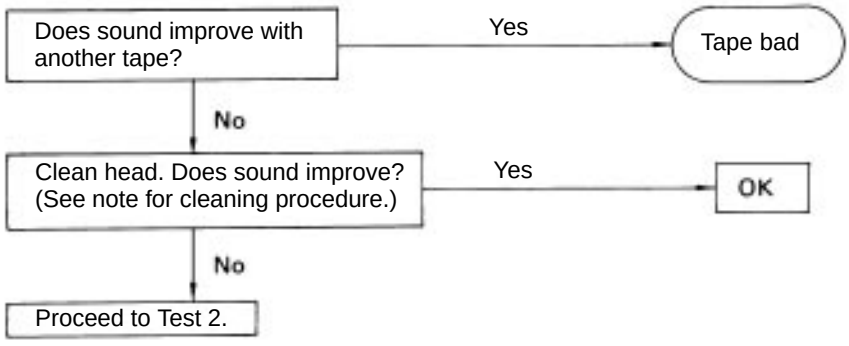

TEST 2

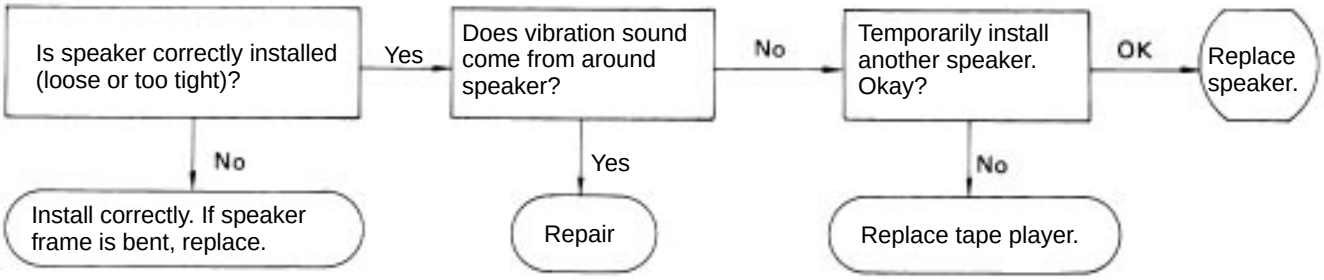

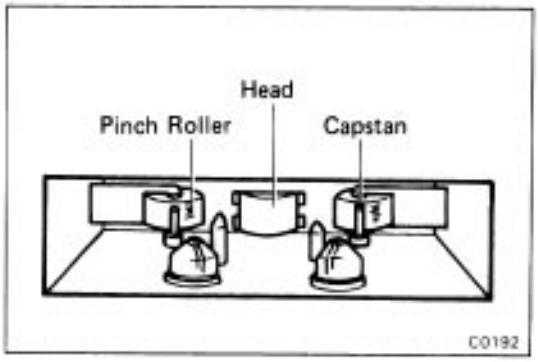

HINT: Head cleaning procedure.

(a) Raise the cassette door with your finger. Next using a pencil or like object, push in the guide.
(b) Using a cleaning pen or cotton applicator soaked in alcohol, clean the head surface, pinch rollers and capstans.
(c) Push in the eject button.

4. DEFECTIVE AUTO–SEARCH MECHANISM

Manual search possible but automatic search mechanism does not function or does not stop at all receivable stations.

- Poor search sensitivity (DX/LOC button)
- Defective radio

TEST

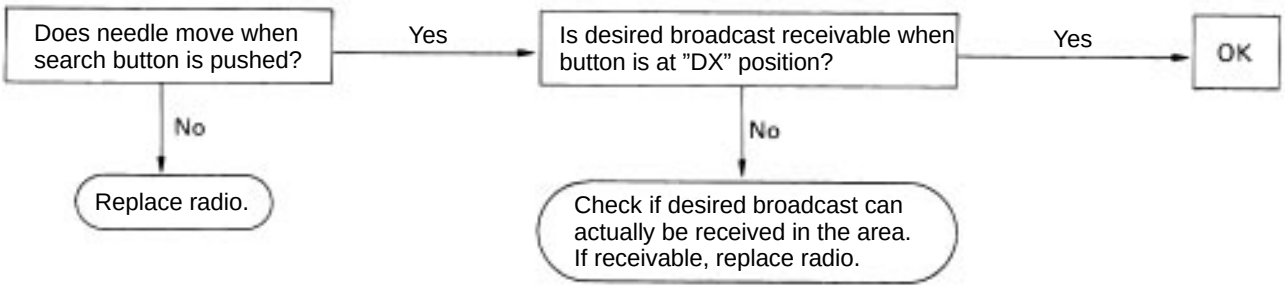

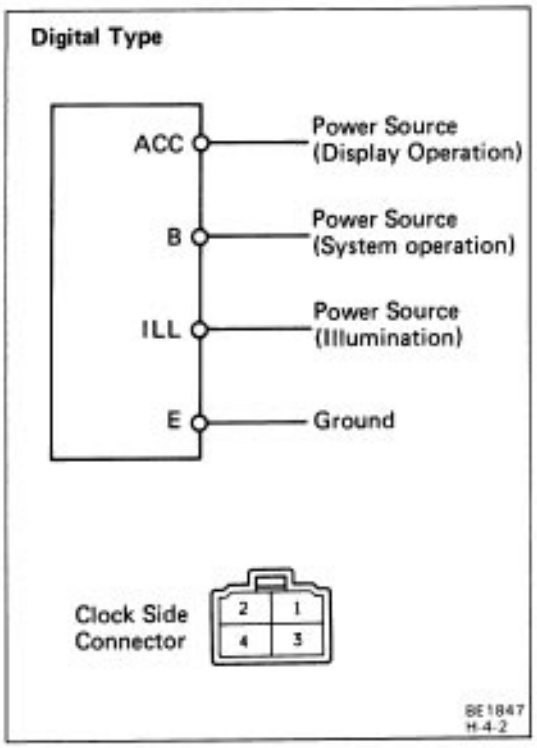

CLOCK
Troubleshooting

As shown in the illustration, these are clock circuit and connector diagrams. Inspect each terminal for applicable trouble.

Terminal		Condition	Specified value
1	E	Constant	Continuity
2	ILL	Turn light control switch ON	Battery Voltage
3	B	Constant	
4	ACC	Turn ignition switch ON	

Allowable error: ± 1.5 seconds/day

BODY

GENERAL INFORMATION

If there is a possibility that the body and/or parts may be damaged, first remove the danger before performing repair operations.
Example:

1. Apply protection tape to the body adjacent to the body part when removing and installing.

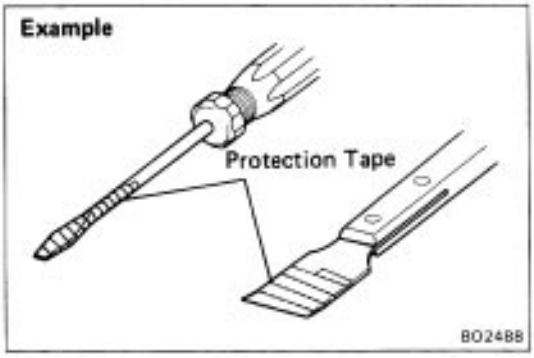

2. When prying off the body parts with a screwdriver or scraper, etc., be sure to apply protection tape to the tip or blade to prevent damage to the paint film or body part.

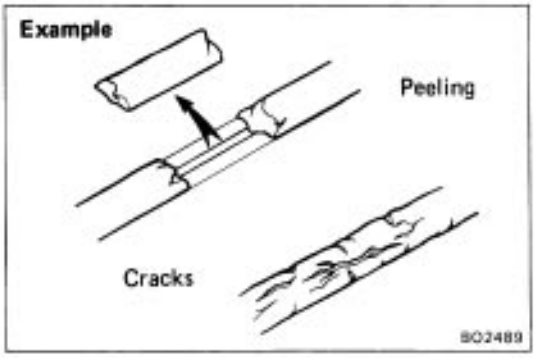

If anti–rust agents are damaged while repairing other parts, be sure to repair the anti–rust agent.
Example:

1. If body sealer, paint film or undercoat are damaged by peeling, cracks, etc., be sure to repair each with an anti–rust agent.

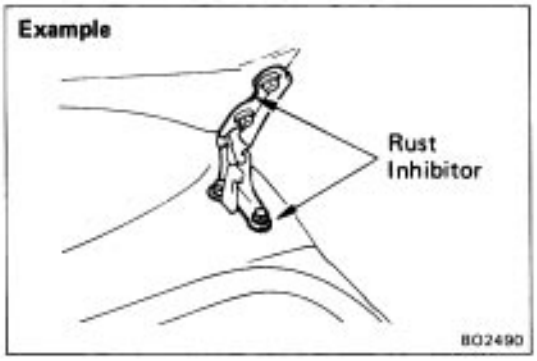

2. If a hinge or exterior body panel is loosened or removed, be sure to apply rust inhibitor after repairs.

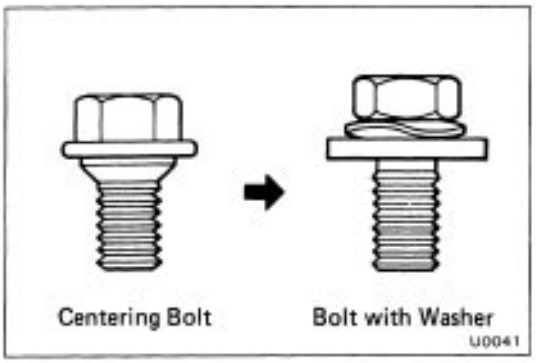

HOOD

ADJUSTMENT OF HOOD

HINT: Since the centering bolt is used as the hood hinge set bolt, the hood cannot be adjusted with it on. Substitute the bolt with washer for the centering bolt.

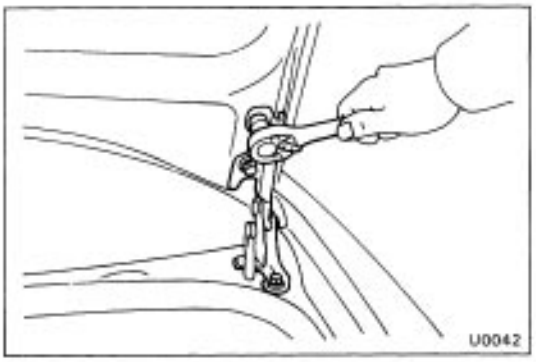

1. ADJUST HOOD IN FORWARD/REARWARD AND LEFT/RIGHT DIRECTIONS

Adjust the hood by loosening the hood side hinge bolts.

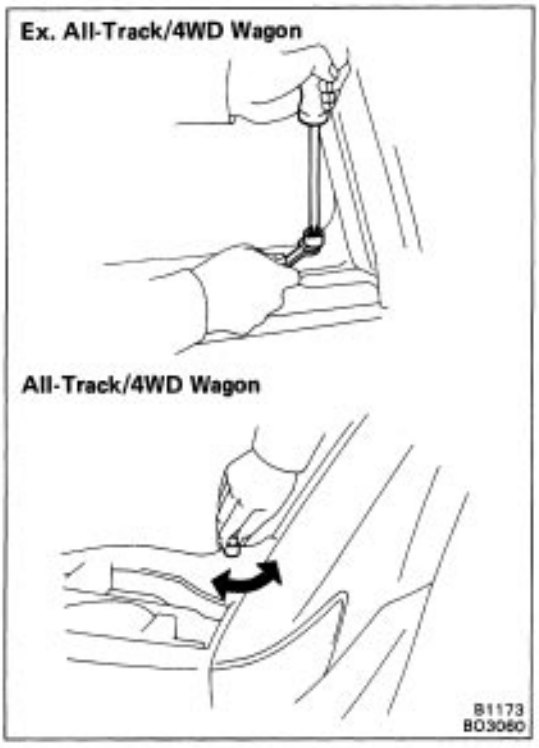

2. ADJUST FRONT EDGE OF HOOD IN VERTICAL DIRECTION

Adjust the hood by turning the cushions.

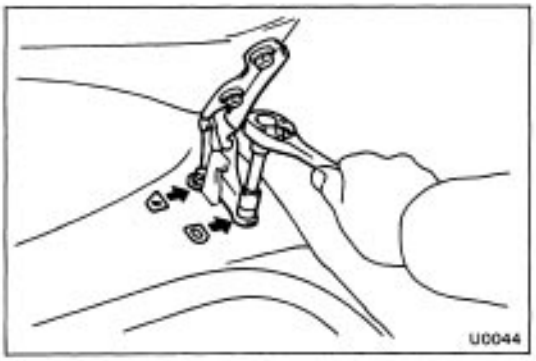

3. ADJUST REAR EDGE OF HOOD IN VERTICAL DIRECTION

Adjust the hood by increasing or decreasing the number of the shims.

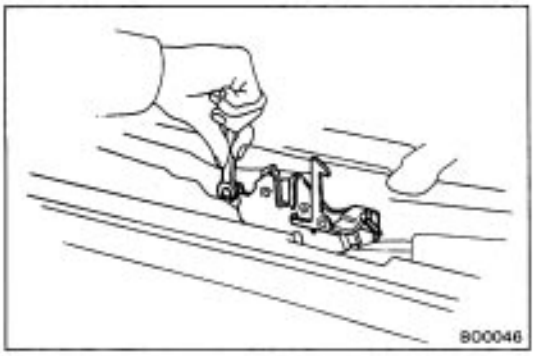

4. ADJUST HOOD LOCK

Adjust the lock by loosening the bolts.

HINT: Substitute the bolt with washer for the centering bolt.

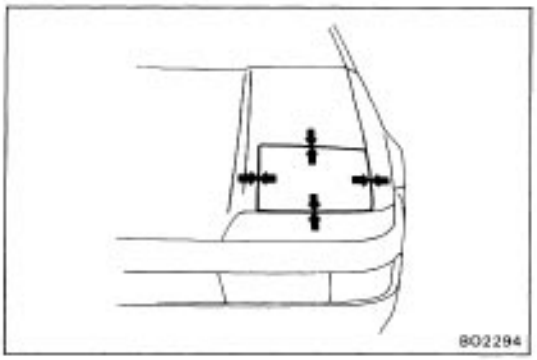

HEADLIGHT (Coupe)

CAUTION: When adjusting each section, raise or lower the headlight with the light control switch. But when adjusting each section, be sure to remove the RTR fuse (30 A) before adjusting.(See page BE–4)

ADJUSTMENT OF HEADLIGHT

1. ADJUST HEADLIGHT COVER IN FORWARD/REARWARD AND LEFT/RIGHT DIRECTIONS

(a) Remove the headlight door.

(b) Adjust the headlight cover by loosening four cover set screws.

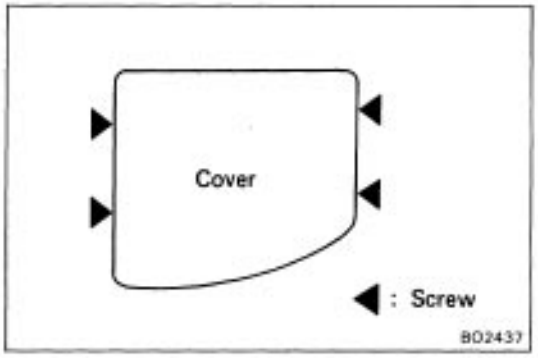

2. ADJUST HEADLIGHT STOPPER POSITION

(a) Raise the headlight.

(b) Loosen the stopper lock nut.

(c) Turn the stopper counterclockwise until it touches the headlight bracket, then turn it another 3I5 turn counterclockwise.

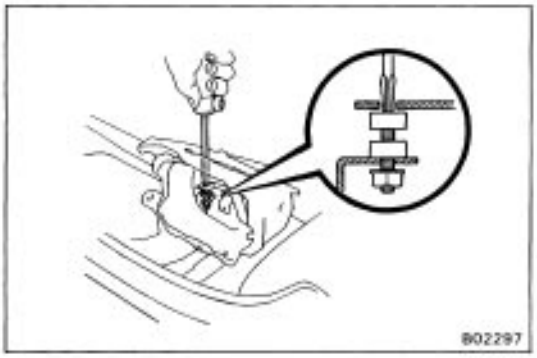

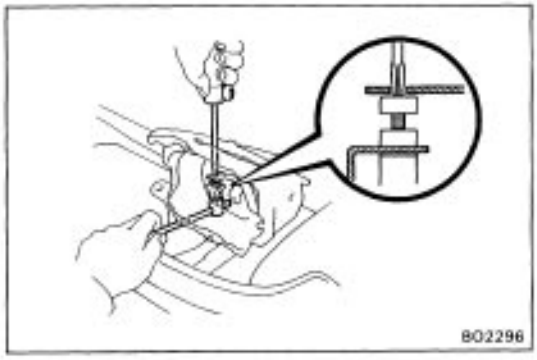

(d) Tighten the stopper lock nut.

(e) Install the headlight.

(f) Install the headlight door.

FRONT DOOR

Ex. Coupe

COMPONENTS

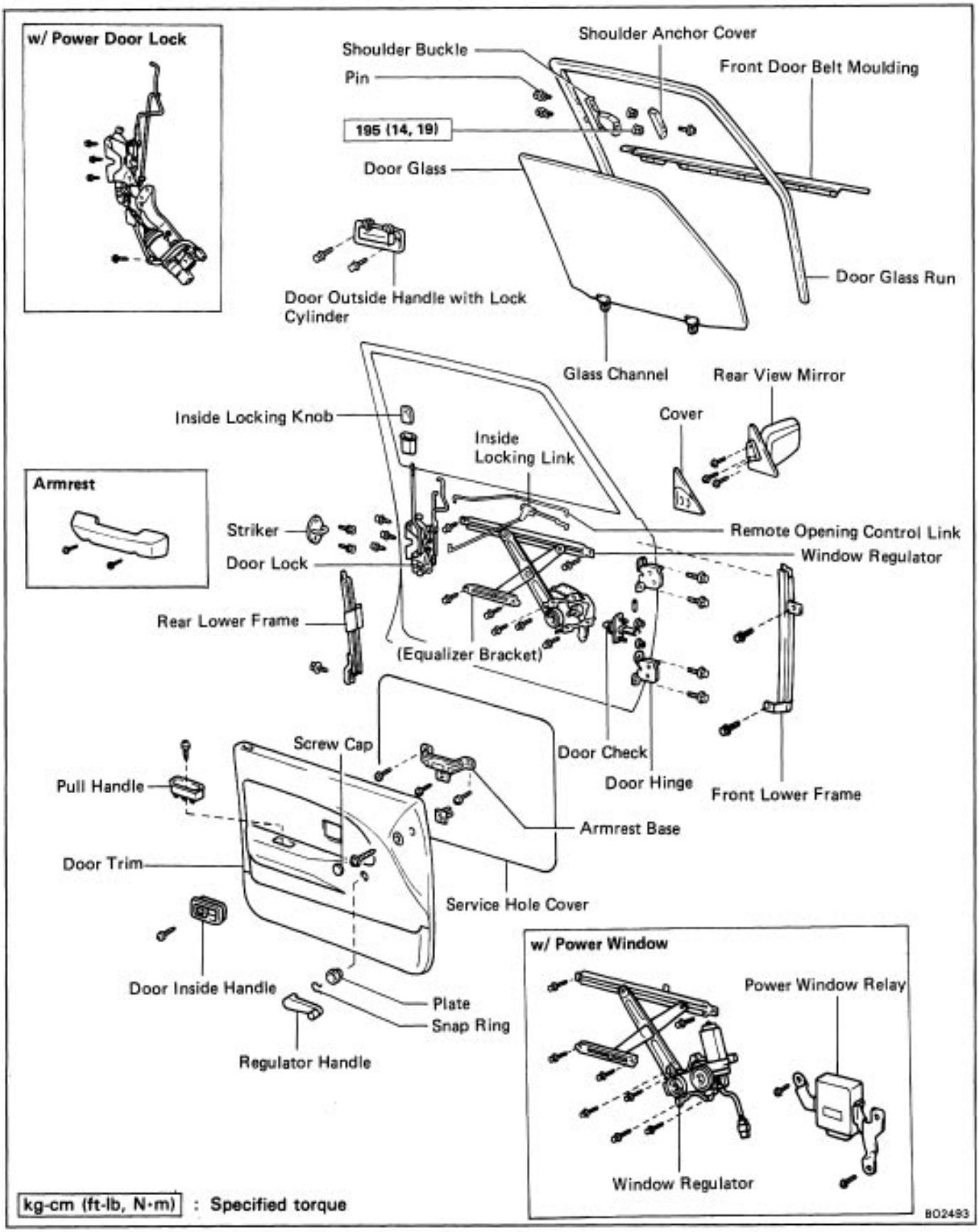

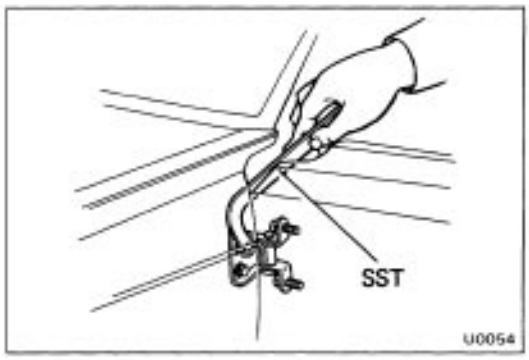

ADJUSTMENT OF FRONT DOOR

1. ADJUST DOOR IN FORWARD/REARWARD AND VERTICAL DIRECTIONS

Using SST, adjust the door by loosening the body side hinge bolts.

SST 09812–00010

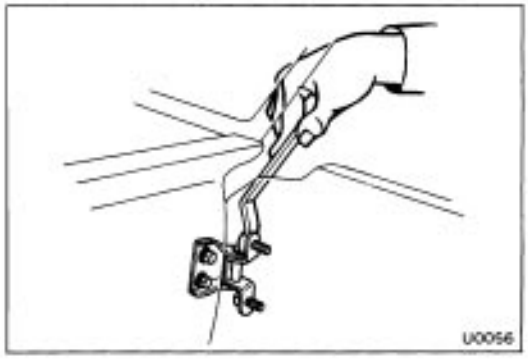

2. ADJUST DOOR IN LEFT/RIGHT AND VERTICAL DIRECTIONS

Loosen the door side hinge bolts to adjust.

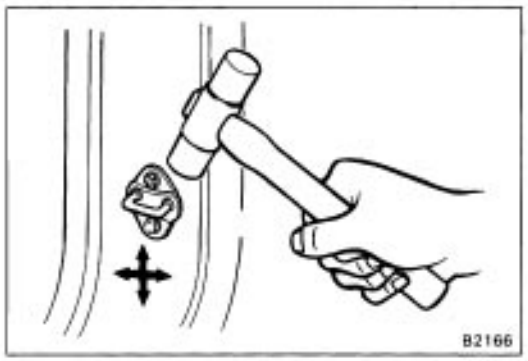

3. ADJUST DOOR LOCK STRIKER

(a) Check that the door fit and door lock linkages are adjusted correctly.

(b) Adjust the striker position by slightly loosening the striker mounting screws, and hitting the striker with a hammer.

Tighten the striker mounting screws again.

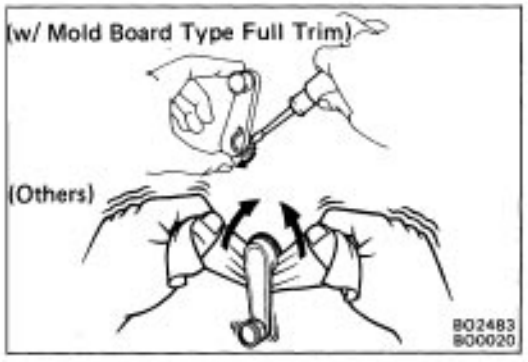

DISASSEMBLY OF FRONT DOOR

(See page BO–6)

1. (w/o POWER window)

REMOVE REGULATOR HANDLE

(w/ Mold board type full trim)

Pull off the snap ring with a screwdriver and remove the regulator handle and plate.

(Others)

Pull off the snap ring with a cloth and remove the regulator handle and plate.

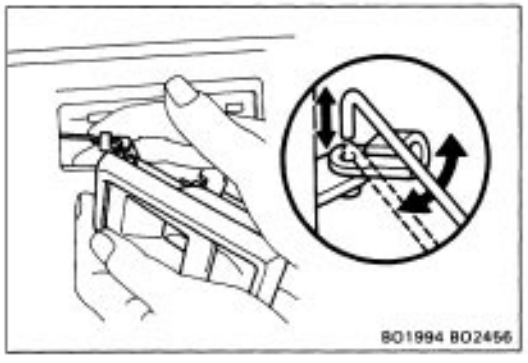

2. REMOVE DOOR INSIDE HANDLE

(a) Remove the screw, and slide the handle forward.

(b) Disconnect the handle from the control link and remove the handle.

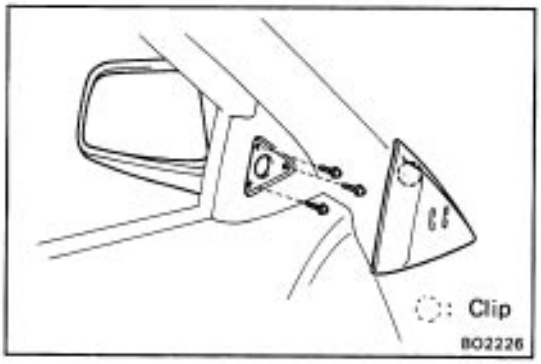

3. REMOVE REAR VIEW MIRROR

(a) (Manual type)

Remove the setting screw and knob.

(b) Using a screwdriver, pry loose the retainer and remove the cover.

HINT: Tape the screwdriver tip before use.

(c) Remove three screws and the mirror.

(d) (Electrical type)

Disconnect the connector.

4. REMOVE ARMREST OR PULL HANDLE

(w/ Pull handle)

Remove the screw and the handle.

(w/ Armrest)

Remove two screws and the armrest.

5. REMOVE DOOR TRIM

(a) (w/ Mold board type full trim)

Using a screwdriver, pry out the screw cap and remove the screw.

HINT: Do not damage the trim with the screwdriver.

(b) Insert a screwdriver between the retainers and door trim to pry it loose.

HINT: Tape the screwdriver tip before use.

(c) (w/ Power window and power door lock)

Disconnect the connectors.

(d) Remove the door trim.

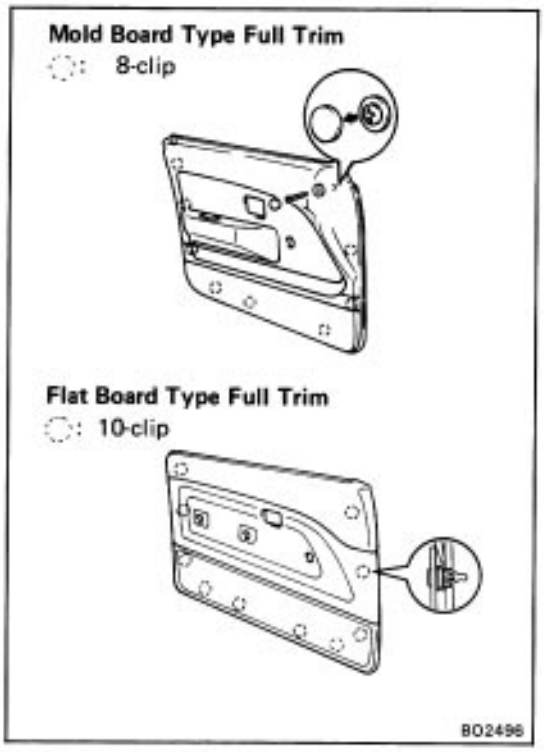

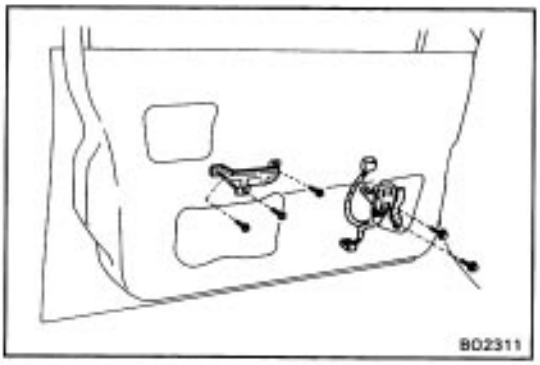

6. (w/ PULL HANDLE)

REMOVE ARMREST BASE

Remove three screws and the base.

7. (w/ POWER window)

REMOVE POWER window RELAY

(a) Disconnect the connector from the relay.

(b) Remove two bolts and the relay.

8. REMOVE SERVICE HOLE COVER

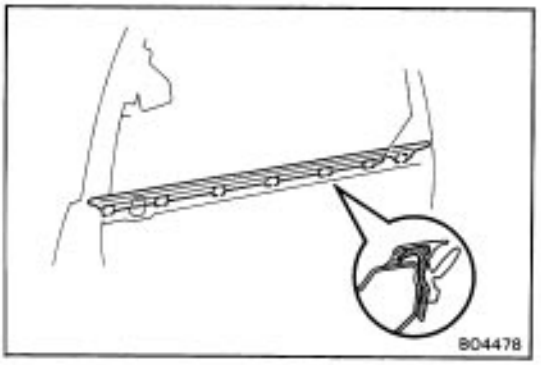

9. REMOVE FRONT DOOR BELT MOULDING

Pry loose the clips from the edge of the panel and remove the belt moulding.

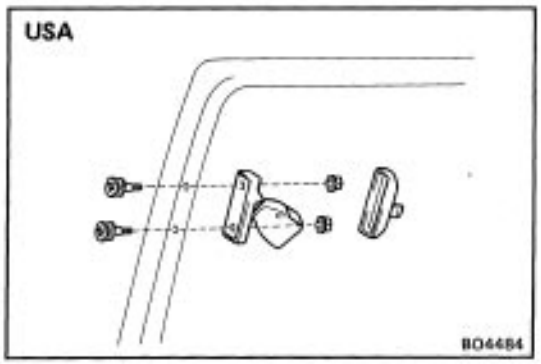

10. (USA)

REMOVE SHOULDER BUCKLE

(a) Using a screwdriver, pull out the shoulder belt anchor cover.

(b) While holding the pin with wrench, remove two nuts.

(c) Remove the pin and the shoulder buckle.

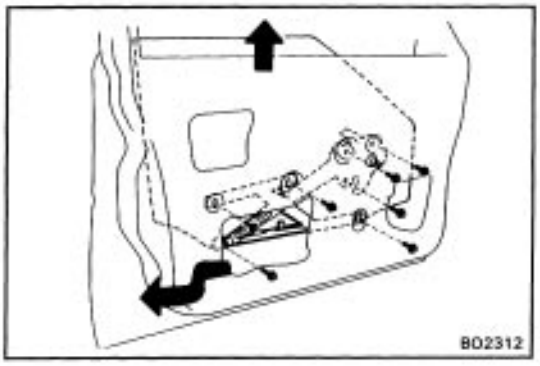

11. REMOVE DOOR GLASS RUN

12. REMOVE REMOTE OPENING CONTROL LINK

Disconnect the link from the door lock.

13. REMOVE DOOR GLASS AND window REGULATOR

(a) wind the glass down into the door cavity.

(b) Remove two glass channel mounting bolts.

(c) Remove the door glass by pulling it upward.

(d) (w/ Power window)

Disconnect the connectors.

(e–1) (w/ Power window)

Remove four regulator mounting bolts.

(e–2) (w/o Power window)

Remove three regulator mounting bolts.

(f) Remove two equalizer arm bracket mounting bolts.

(g) Remove the regulator through the service hole.

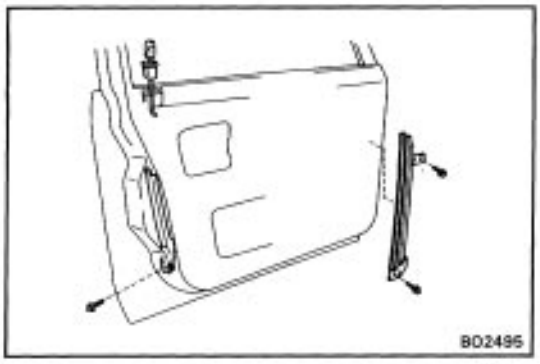

14. REMOVE FRONT AND REAR LOWER FRAME

(a) Remove two bolts and the front lower frame.

(b) Remove the bolt and the rear lower frame.

15. REMOVE INSIDE LOCKING KNOB

16. REMOVE DOOR LOCK AND DOOR OUTSIDE HANDLE with LOCK CYLINDER

(a) Disconnect the links from the door outside handle and lock cylinder.

(b) (w/ Power door lock)

Disconnect the connectors and remove the bolt from the solenoid.

(c) Remove three screws and the door lock.

(d) Remove two bolts and the door outside handle with lock cylinder.

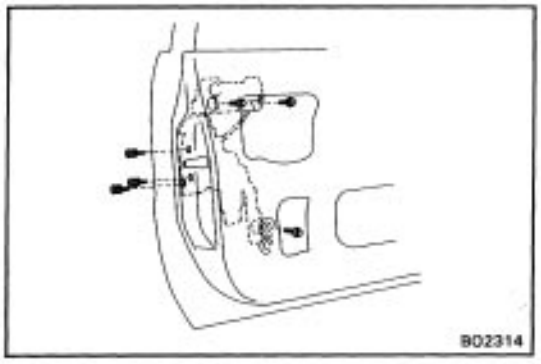

ASSEMBLY OF FRONT DOOR

(See page BO–6)

1. BEFORE INSTALLING PARTS, COAT THEM with MP GREASE

(a) Apply MP grease to the sliding surface and gears of the window regulator.

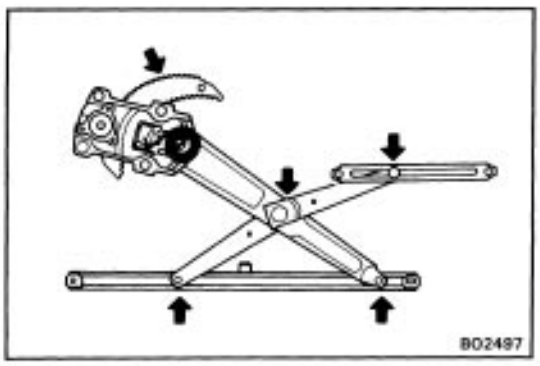

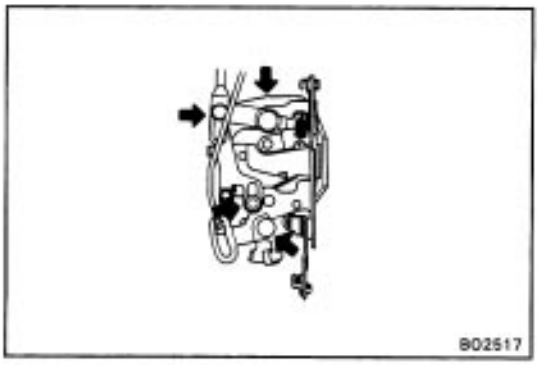

NOTICE: Do not apply MP grease to the spring of the window regulator.

(b) Apply MP grease to the sliding surface of the door lock.

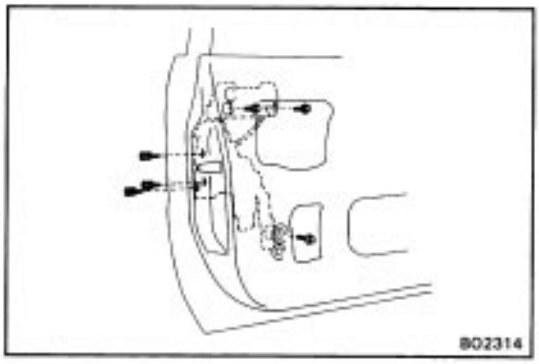

2. INSTALL DOOR OUTSIDE HANDLE with LOCK CYLINDER AND DOOR LOCK

(a) Install the door outside handle and lock cylinder with two bolts.

(b–1) (w/o Power door lock)
Install the door lock with three screws.

(b–2)(w/ Power door lock)
Install the door lock and solenoid with three screws and one bolt, then connect the connector.

(c) Install the links to the door outside handle and lock cylinder.

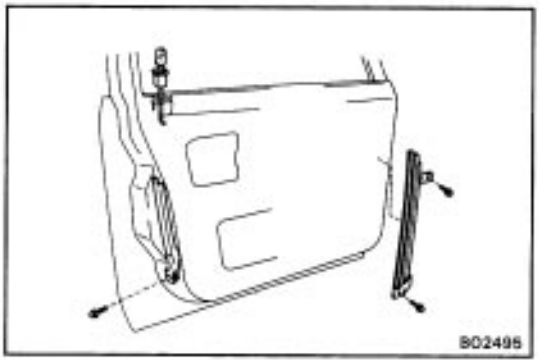

3. INSTALL INSIDE LOCKING KNOB

4. INSTALL FRONT AND REAR LOWER FRAME

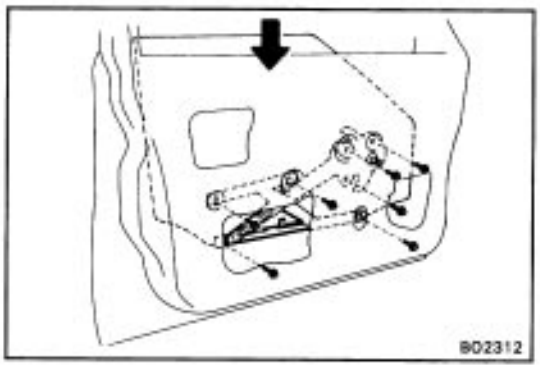

5. INSTALL DOOR GLASS AND window REGULATOR

(a–1) (w/ Power window)
Place the regulator through the service hole and install six mounting bolts.

(a–2) (w/o Power window)
Place the regulator through the service hole and install five mounting bolts.

(b) Place the glass in the door cavity.

(c) Install the glass to the regulator with the two mounting bolts.

(d) (w/ Power window)
Connect the connectors.

6. INSTALL REMOTE OPENING CONTROL LINK

7. (USA)
INSTALL SHOULDER BUCKLE
Torque: 195 kg–cm (14 ft–lb, 19 N–m)

8. INSTALL DOOR GLASS RUN

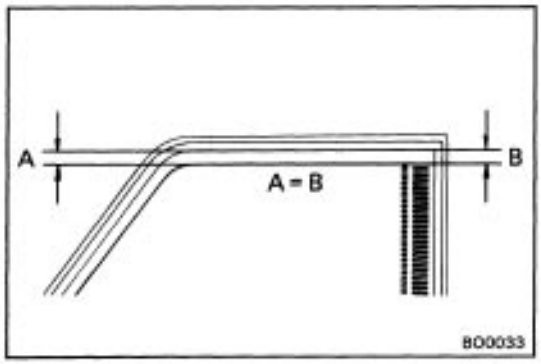

9. ADJUST DOOR GLASS

Adjust the equalizer arm up or down and tighten it where dimensions A and B, as shown, are equal.

10. INSTALL FRONT DOOR BELT MOULDING

Insert the claw of the clips into the upper panel hole and push the moulding onto the panel.

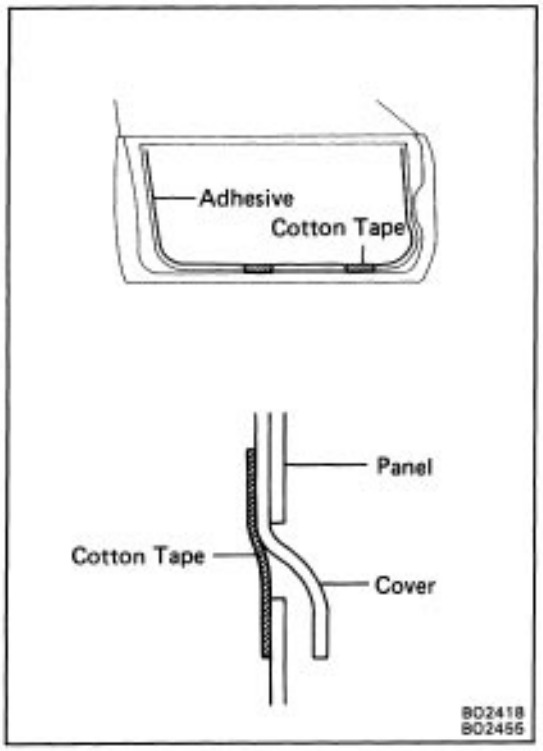

11. INSTALL SERVICE HOLE COVER

(a) Seal the service hole cover with adhesive.

(b) Insert the lower edge of the service hole cover into the panel slit.

(c) Seal the panel slit with cotton tape.

NOTICE: Do not block the trim clip seating with the tape.

12. (w/ POWER window)

INSTALL POWER window RELAY

(a) Install the relay with two bolts.

(b) Connect the connector to the relay.

13. (w/ PULL HANDLE)

INSTALL ARMREST BASE

Install the armrest base with three screws.

14. INSTALL DOOR TRIM

(See step 5 on page BO–8)

(a) (w/ Power window and power door lock)
Connect the connectors.

(b) Install the door trim with clips to the inside door panel by tapping.

(c) (w/ Mold board type full trim)
Install the screw and screw cap.

15. INSTALL ARMREST OR PULL HANDLE

16. INSTALL REAR VIEW MIRROR

(a) (Electrical type)
Connect the connector.

(b) Install the mirror with three screws.

(c) Install the cover.

(d) (Manual type)
Install the setting screw and knob.

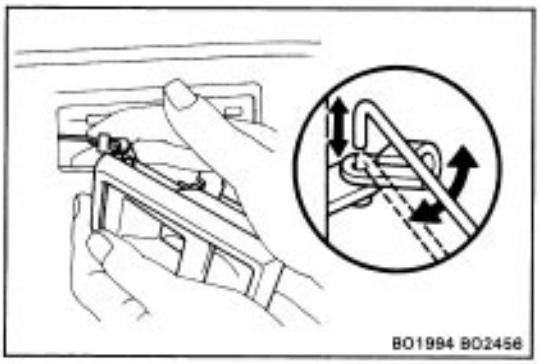

17. INSTALL DOOR INSIDE HANDLE

(a) Connect the handle to the control link.
(b) Push the inside handle in the door panel and slide it rearward.
(c) Install the screw.

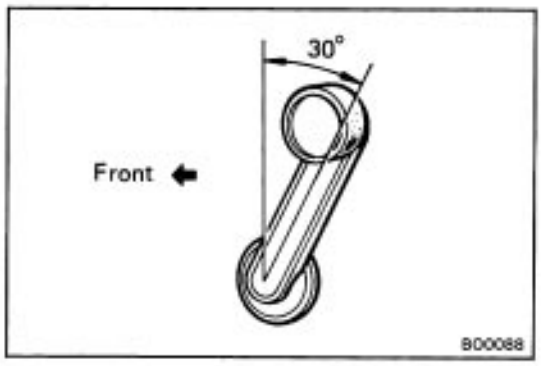

18. (w/o POWER window)

INSTALL REGULATOR HANDLE

with door window fully closed, install the plate and regulator handle with a snap ring as shown.

Coupe

COMPONENTS

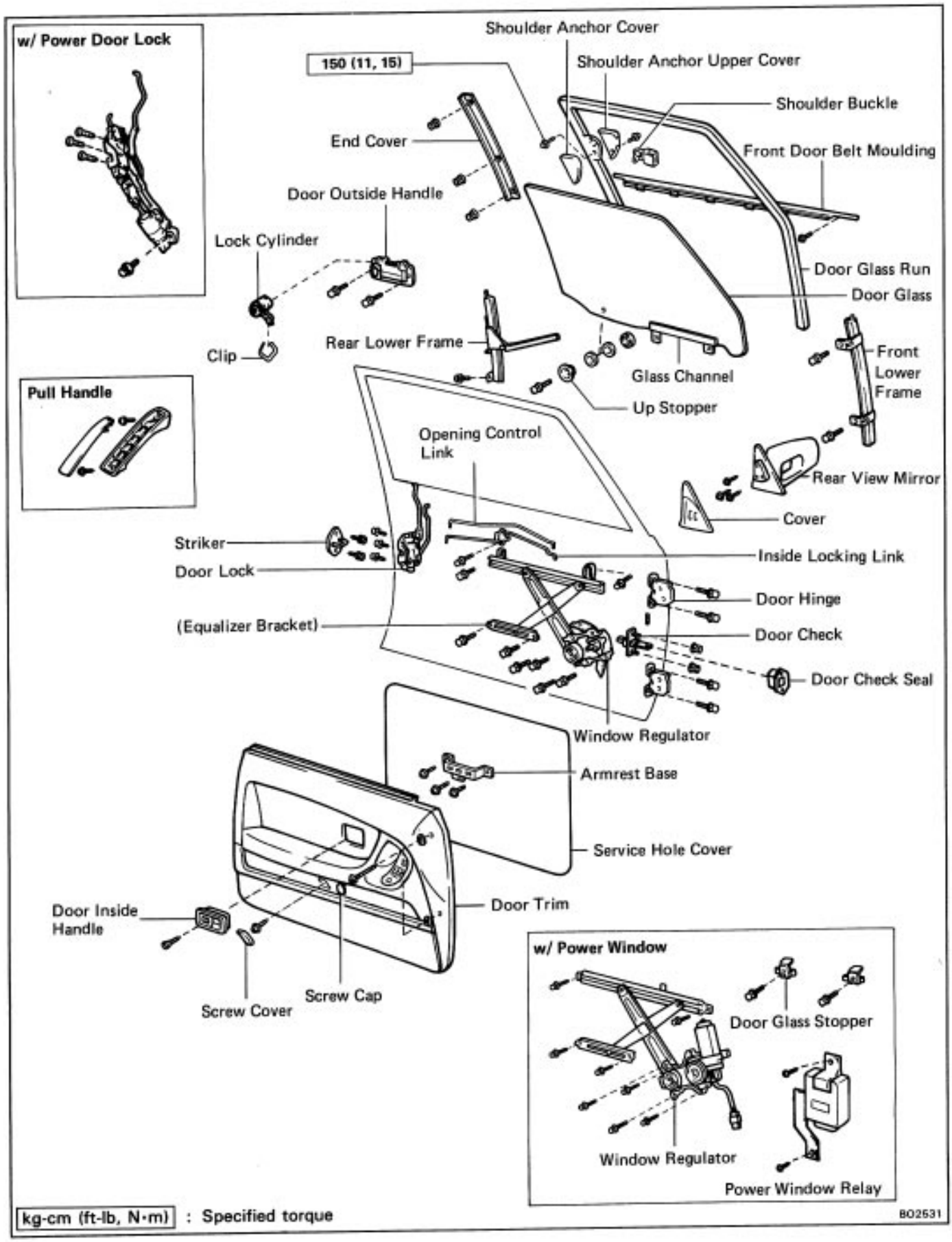

ADJUSTMENT OF FRONT DOOR

(See page BO–7)

DISASSEMBLY OF FRONT DOOR

(See page BO–13)

1. REMOVE FOLLOWING PARTS:

(See steps 1 to 3 on pages BO–7 and 8)

- (w/o Power window)
  Regulator handle
- Door inside handle
- Rear view mirror

2. (w/o Power window)

REMOVE INSIDE HANDLE BEZEL OR PULL HANDLE

(a) (w/ Inside handle bezel)

Remove the screw and the bezel.

(b) (w/ Pull handle)

Pry out the cover, then remove two screws and the handle.

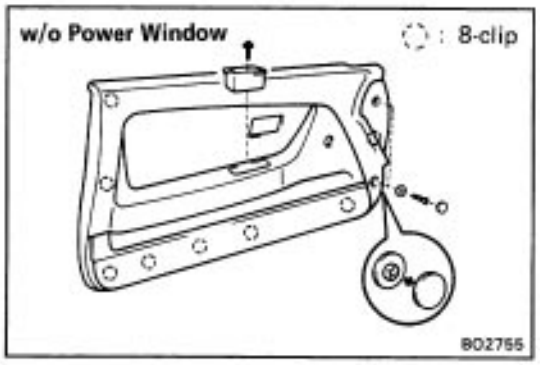

3. REMOVE DOOR TRIM

(a) Using a screwdriver, pull out two screw caps and remove two screws.

HINT: Do not damage the trim with the screwdriver.

(b) (w/ power window)

Using a screwdriver, pull out the cover and remove a screw.

HINT: Tape the screwdriver tip before use.

(c) Insert a screwdriver between the retainers and door trim to pry it loose.

(d) (w/ power window or power door lock)

Disconnect the connectors.

(e) Remove the door trim.

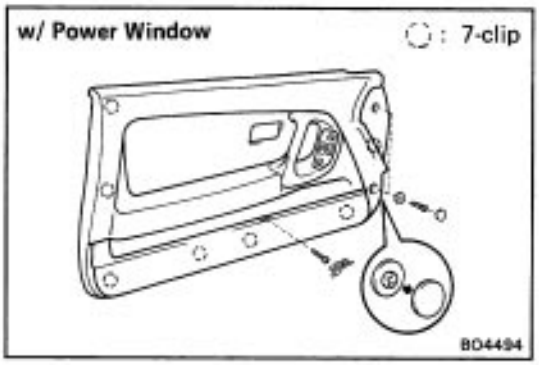

4. REMOVE FOLLOWING PARTS:

- (w/ Inside handle bezel)
  Armrest base (See step 6 on page BO–8)
- (w/ Power window)
  Power window relay (See step 7 on page BO–8)
- Service hole cover

5. REMOVE FOLLOWING LINKAGES:

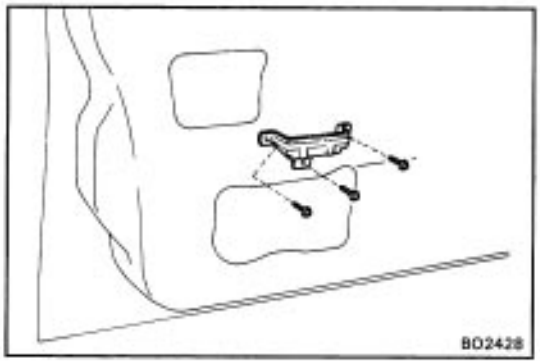

- Opening control link
- Inside locking link with screw

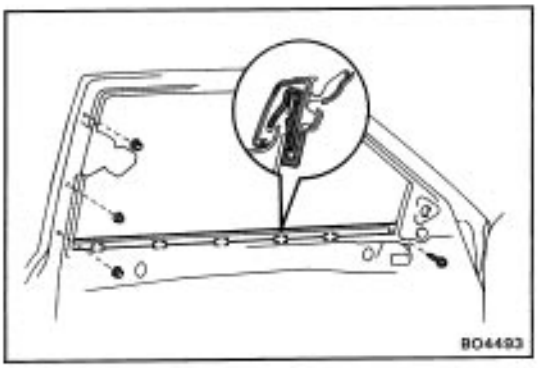

6. REMOVE FRONT DOOR BELT MOULDING AND BELT MOULDING END COVER

(a) Remove the screw from the front edge of the moulding.
(b) Pry loose the clips from the edge of the panel and remove the front door belt moulding.
(c) Remove three nuts and the end cover.

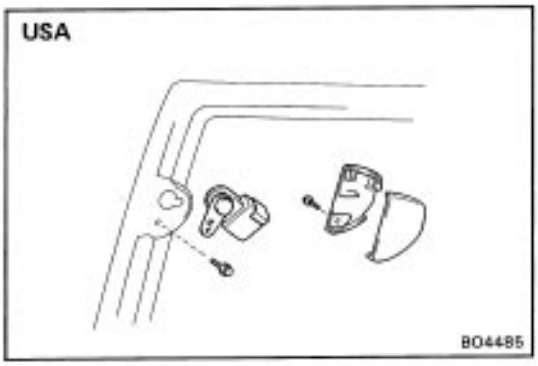

7. (USA)

REMOVE SHOULDER BUCKLE

(a) Using the screwdriver, pry out the shoulder anchor cover.
(b) Remove one screw and the shoulder anchor upper cover.
(c) Remove one bolt and slide the buckle, then pull out it.

8. REMOVE DOOR GLASS RUN

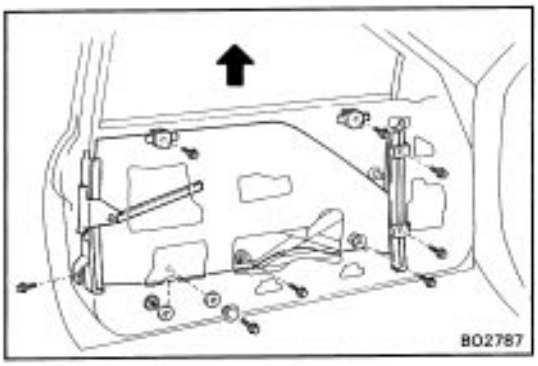

9. REMOVE FRONT AND REAR LOWER FRAME

(a) Remove two bolts and the front lower frame.
(b) Remove the bolt and the rear lower frame.

10. REMOVE DOOR GLASS .

(a) (w/ Power window)
Remove two bolts and two door glass stoppers.
(b) Remove the bolt and the up stopper.
(c) Remove two glass mounting bolts and pull it upward.

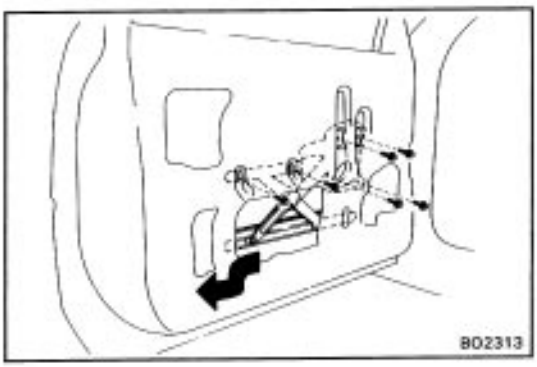

11. REMOVE WINDOW REGULATOR

(a) (w/ Power window)
Disconnect the connectors.
(b) Remove four regulator mounting bolts and two equalizer arm bracket mounting bolts.
(c) Remove the regulator through the service hole.

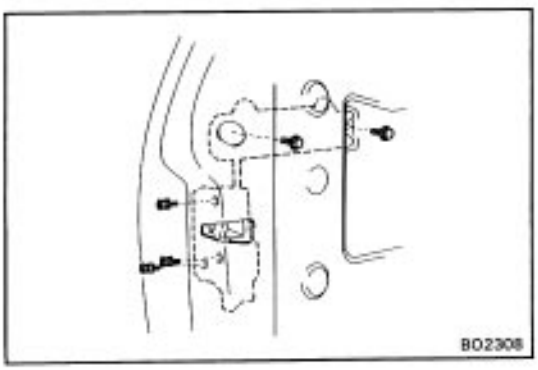

12. REMOVE DOOR LOCK AND DOOR OUTSIDE HANDLE

(a) Disconnect the links from the door outside handle and lock cylinder.
(b) Remove the clip and lock cylinder from the handle.
(c) (w/ Power door lock)
Disconnect the connector and remove the bolt from the solenoid.
(d) Remove three screws and the door lock.
(e) Remove two bolts and the door outside handle.

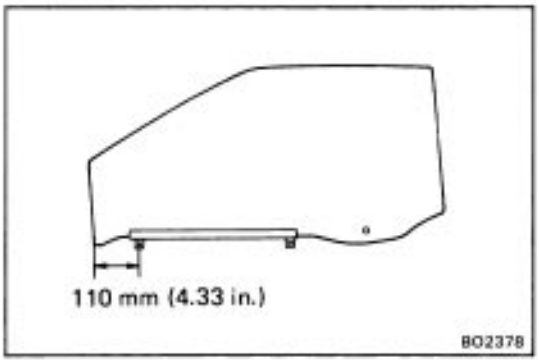

REPLACEMENT OF GLASS

1. REMOVE GLASS CHANNEL with SCREWDRIVER OR SUCH

2. APPLY SOAPY WATER TO INSIDE OF WEATHERSTRIP

3. INSTALL CHANNEL BY TAPPING IT with PLASTIC HAMMER

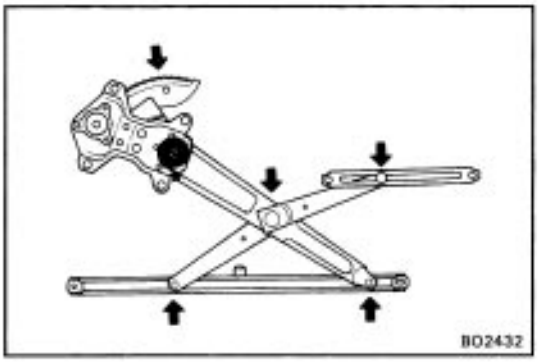

ASSEMBLY OF FRONT DOOR

(See page 130– 13)

1. BEFORE INSTALLING PARTS, COAT THEM with MP GREASE

(a) Apply MP grease to the sliding surface and gears of the window regulator.

NOTICE: Do not apply MP grease to the spring of the window regulator.

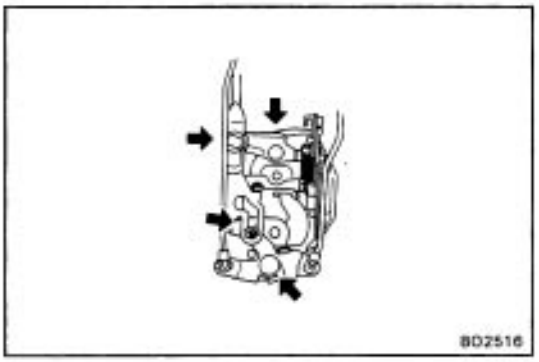

(b) Apply MP grease to the sliding surface of the door lock.

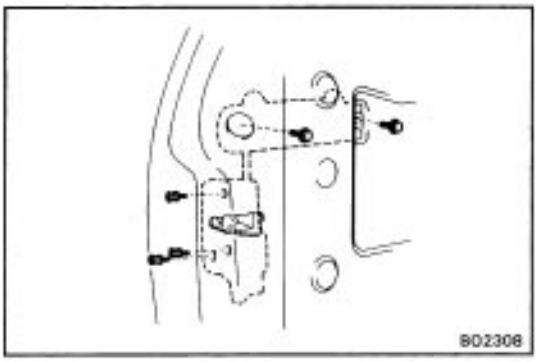

2. INSTALL DOOR LOCK AND DOOR OUTSIDE HANDLE

(a) Install the door outside handle with two bolts.

(b) Install the lock cylinder to the handle with the clip.

(c–1) (w/o Power door lock)

Install the door lock with three screws.

(c–2) (w/ Power door lock)

Install the door lock and solenoid with three screws and one bolt, then connect the connector.

(d) Install the links to the door outside handle and lock cylinder.

3. INSTALL window REGULATOR

(a) Place the regulator through the service hole and install six mounting bolts.

(b) (w/ Power window)

Connect the connectors.

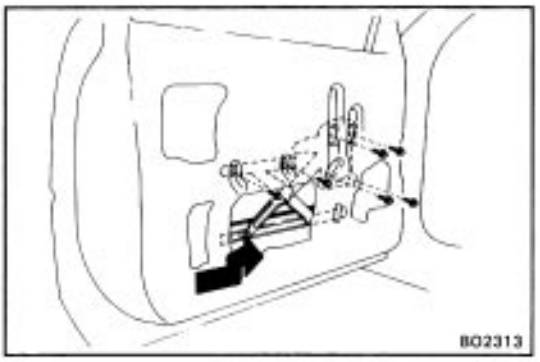

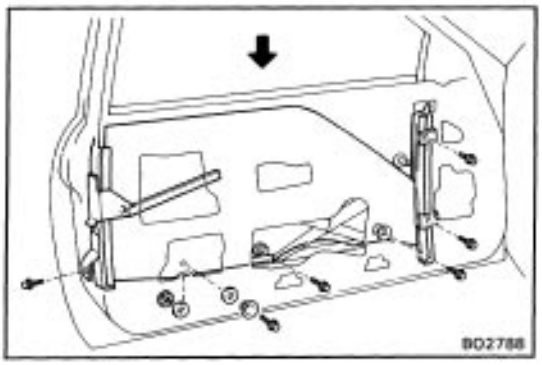

4. INSTALL FRONT AND REAR LOWER FRAME

5. INSTALL DOOR GLASS

6. (USA)

INSTALL SHOULDER BUCKLE

Torque: 195 kg–cm (14 ft–lb, 19 N – m)

7. INSTALL DOOR GLASS RUN

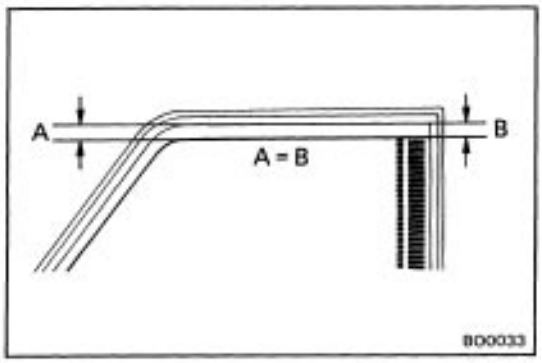

8. ADJUST DOOR GLASS

(a) Adjust the equalizer arm up or down and tighten it where dimensions A and B, as shown, are equal.

(b) (w/ Power window)

Install two bolts and two glass stoppers, then with the door glass fully closed, adjust the door glass stopper so it lightly makes contact with the glass plate.

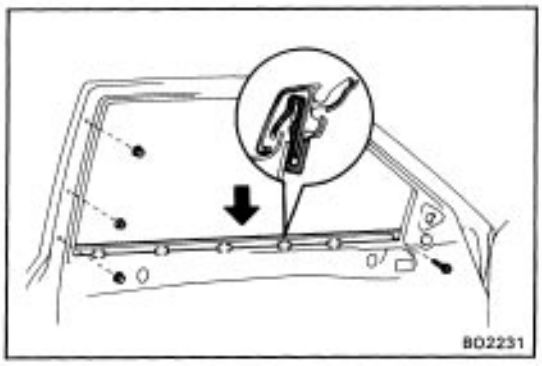

9. INSTALL FRONT DOOR BELT MOULDING AND BELT MOULDING END COVER

(a) Insert the claw of the clips into the upper panel hole and push the moulding onto the panel.

(b) Install the screw to the moulding.

(c) Install the end cover with three nuts.

10. INSTALL FOLLOWING LINKAGES:

- Opening control link
- Inside locking link with screw

HINT: Insert the link in the link guide, then connect the link.

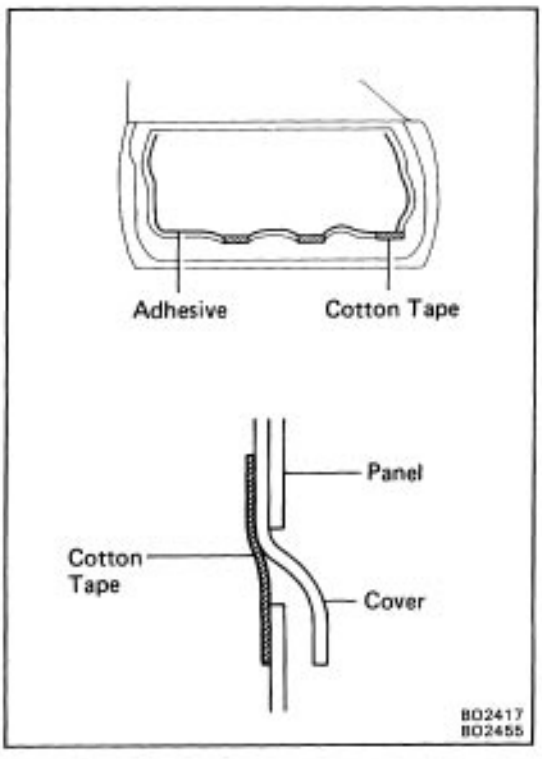

11. INSTALL SERVICE HOLE COVER

(a) Seal the service. hole cover with adhesive.

(b) Insert the lower edge of the service hole cover into the panel slit.

(c) Seal the panel slit with cotton tape.

NOTICE: Do not block the trim clip seating with the tape.

12. INSTALL FOLLOWING PARTS:

- (w/ Inside handle bezel)
  Arm rest base
- (w/ Power window)
  Power window relay

13. INSTALL DOOR TRIM

(See step 3 on page BO–14)

(a) (w/ Power window and power door lock)
Connect the connectors.

(b) Install the door trim with clips to the inside door panel by tapping.

(c) Install two screws and two screw caps.

14. INSTALL INSIDE HANDLE BEZEL OR PULL HANDLE

15. INSTALL FOLLOWING PARTS:

(See steps 15 to 17 on pages BO–11 and 12)

- Rear view mirror
- Door inside handle
- (w/o Power window)
  Regulator handle

REAR DOOR

COMPONENTS

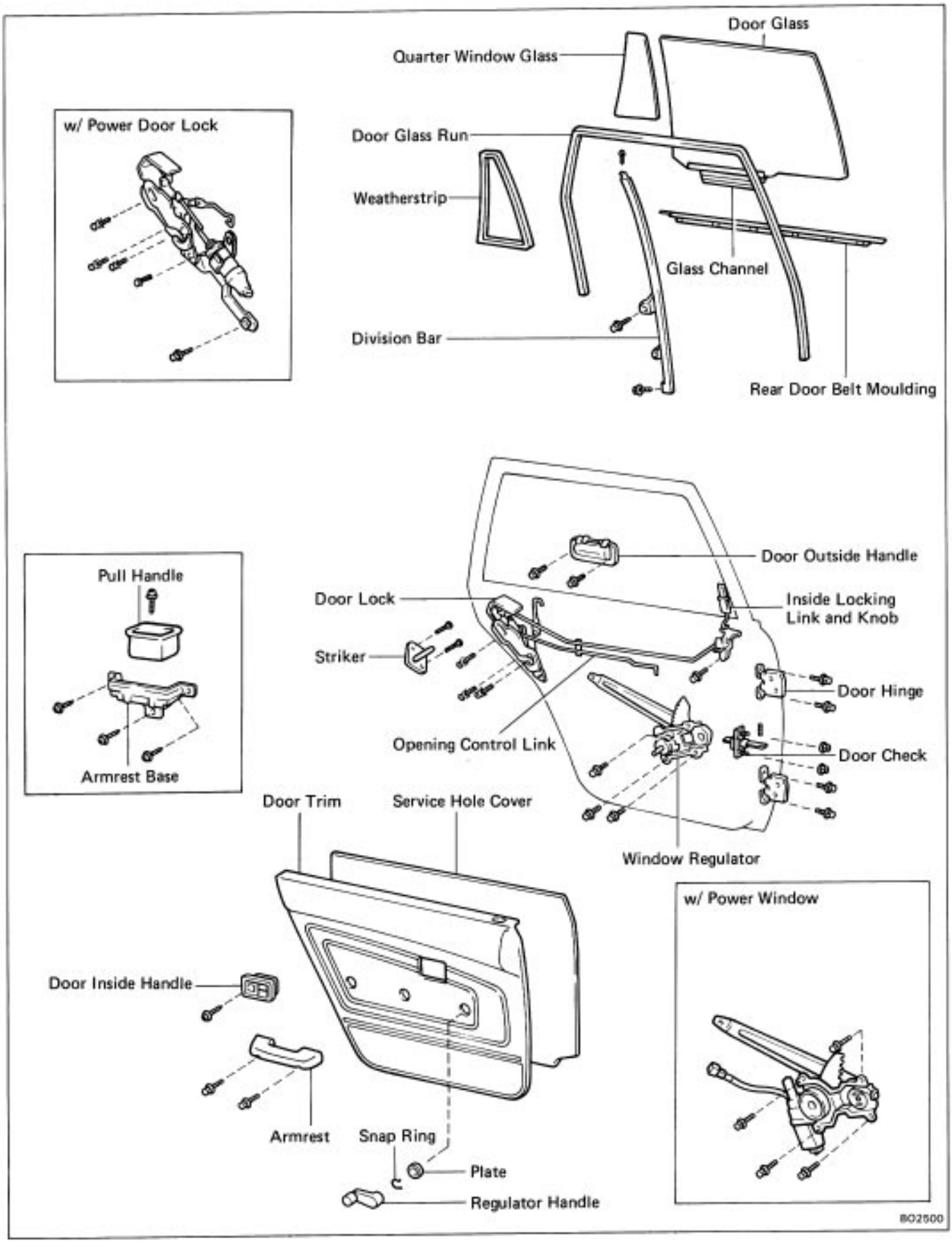

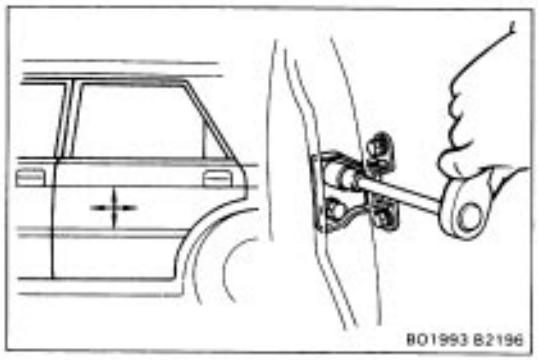

ADJUSTMENT OF REAR DOOR

1. ADJUST DOOR IN FORWARD/REARWARD AND VERTICAL DIRECTIONS

Using a wrench, loosen the body side hinge bolts.

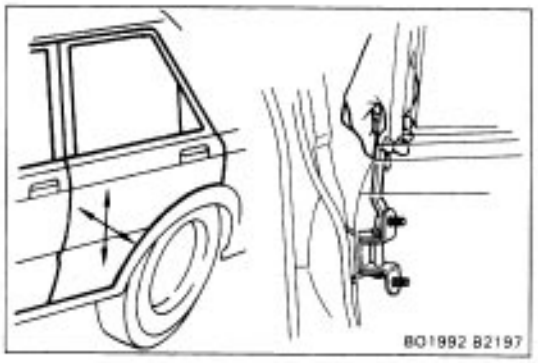

2. ADJUST DOOR IN LEFT/RIGHT VERTICAL DIRECTIONS

Using a wrench, loosen the door side hinge bolts.

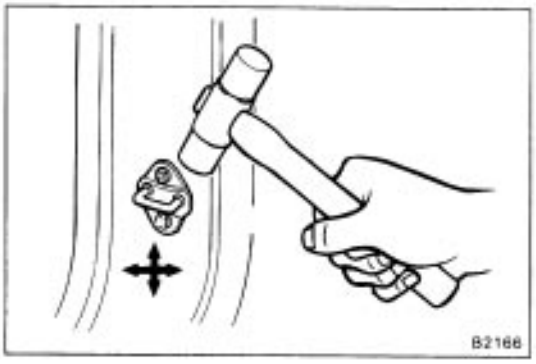

3. ADJUST DOOR LOCK STRIKER

(a) Check that the door fit and lock linkages are adjusted correctly.

(b) Adjust the striker position by slightly loosening the striker mounting screws, and hitting the striker with a hammer.

Tighten the striker mounting screws again.

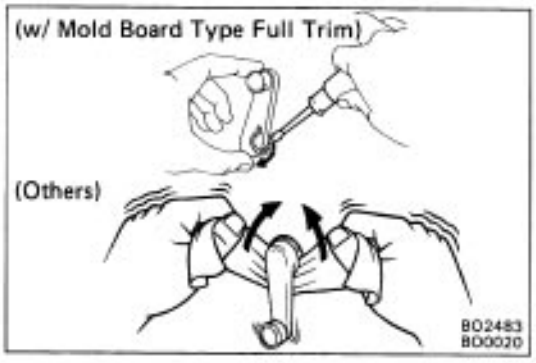

DISASSEMBLY OF REAR DOOR

(See page BO–19)

1. (w/o POWER window)

REMOVE REGULATOR HANDLE

(w/ Mold board type full trim)

Pull off the snap ring with a screwdriver and remove the regulator handle and plate.

(Others)

Pull off the snap ring with a cloth and remove the regulator handle and plate.

2. REMOVE DOOR INSIDE HANDLE

(a) Remove the screw, and slide the handle forward.

(b) Disconnect the handle from the control link and remove the handle.

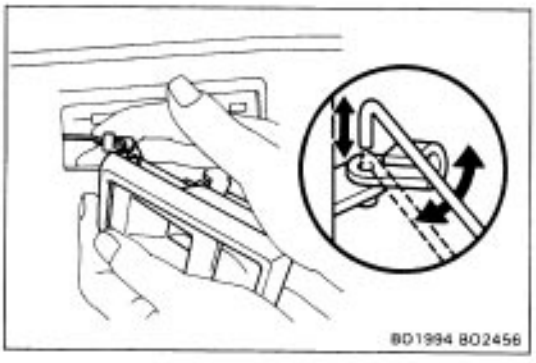

3. REMOVE ARMREST OR PULL HANDLE

(w/ Arm rest)

Remove two screws and the arm rest.

(w/ Pull handle)

Remove the screw and the handle.

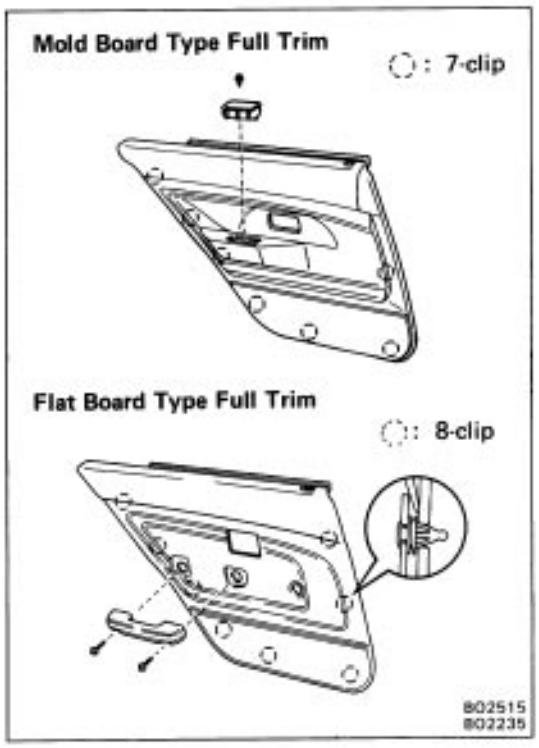

4. REMOVE DOOR TRIM

(a) Insert a screwdriver between the retainers and door trim to pry it loose.

HINT: Tape the screwdriver tip before use.

(b) (w/ Power window and power door lock)
Disconnect the connectors.

(c) Remove the door trim.

5. (w/ PULL HANDLE)
REMOVE ARMREST BASE

6. REMOVE SERVICE HOLE COVER

7. REMOVE DOOR GLASS RUN

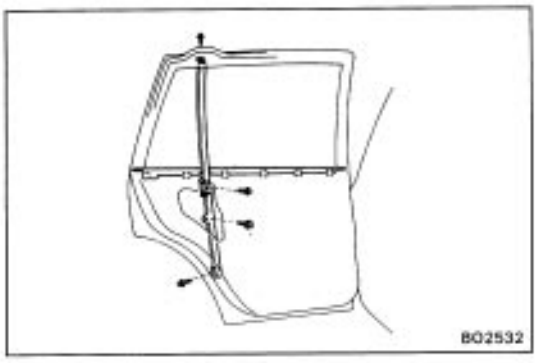

8. REMOVE DIVISION BAR

(a) Remove the screw under the weatherstrip.

(b) Remove three bolts.

(c) Pull out the division bar.

9. REMOVE REAR DOOR BELT MOULDING

Pry loose the clips from the edge of the panel and remove the belt moulding.

10. REMOVE QUARTER window GLASS with WEATHERSTRIP

Remove the quarter window glass together with the weatherstrip by pulling it forward.

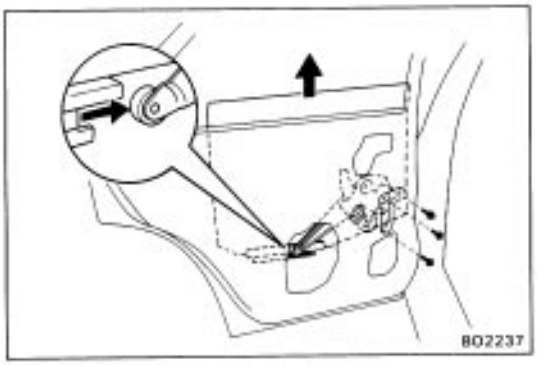

11. REMOVE DOOR GLASS AND window REGULATOR

(a) Disconnect the glass from the regulator arm and pull the glass upward by hand.

(b–1)(w/ Power window)
Disconnect the connector, remove four regulator mounting bolts and remove it.

(b–2) (w/o Power window)
Remove three regulator mounting bolts and remove it.

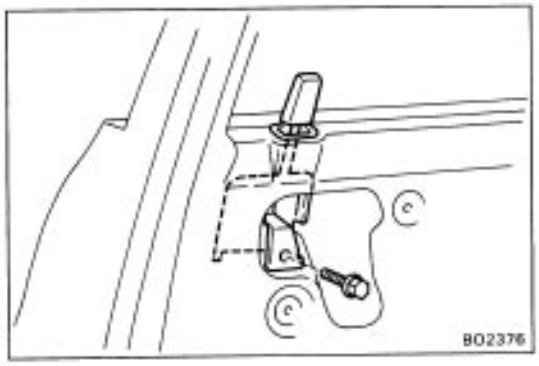

12. REMOVE INSIDE LOCKING LINK AND KNOB

(a) Remove the bolt.

(b) Disconnect the link from the door lock and remove the link and knob.

13. REMOVE OPENING CONTROL LINK

Disconnect the link from the door lock.

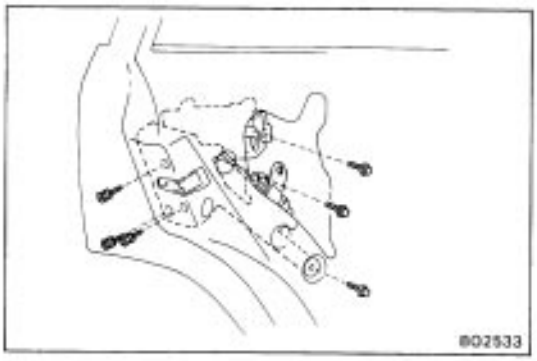

14. REMOVE DOOR OUTSIDE HANDLE AND DOOR LOCK

(a) Disconnect the link from the door outside handle.

(b) Remove two bolts and the door outside handle.

(c) (w/ Power door lock)

Disconnect the connector and remove the bolt from the solenoid.

(d) Remove three screws and the door lock.

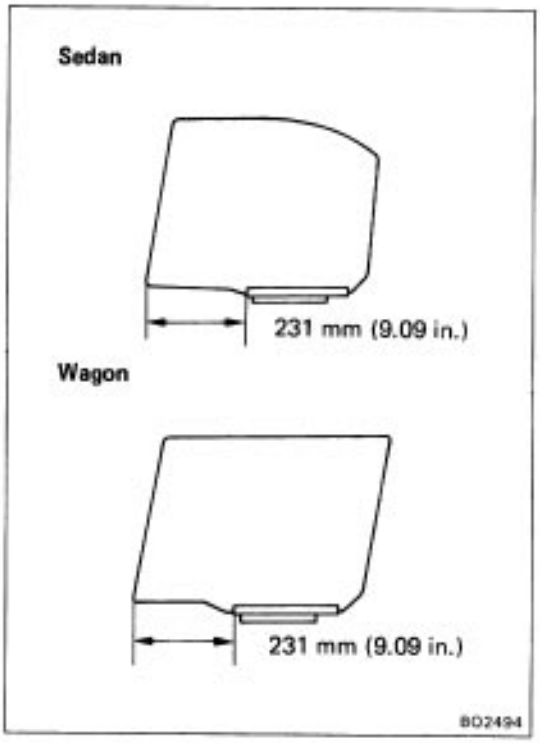

REPLACEMENT OF GLASS

1. REMOVE GLASS CHANNEL with SCREWDRIVER OR SUCH

2. APPLY SOAPY WATER TO INSIDE OF WEATHERSTRIP

3. INSTALL CHANNEL BY TAPPING IT with PLASTIC HAMMER

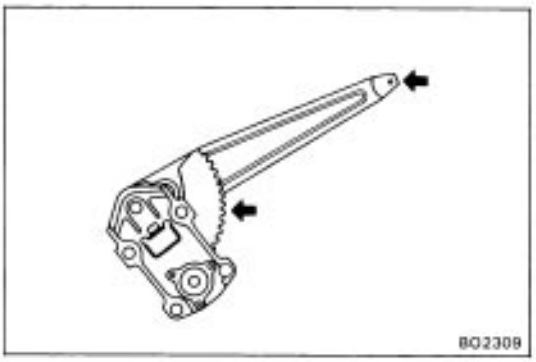

ASSEMBLY OF REAR DOOR

(See page BO–19)

1. BEFORE INSTALLING PARTS, COAT THEM with MP GREASE

(a) Apply MP grease to the sliding surface and gears of the window regulator.

NOTICE: Do not apply MP grease to the spring of the window regulator.

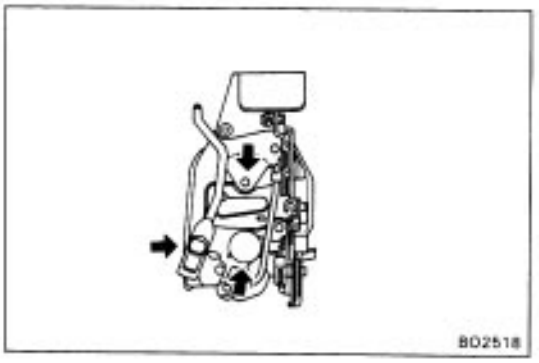

(b) Apply MP grease to the sliding surface of the door lock.

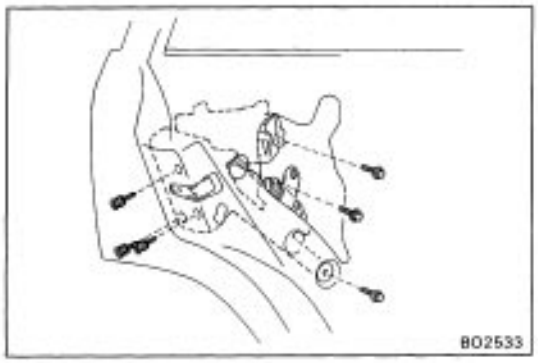

2. INSTALL DOOR OUTSIDE HANDLE AND DOOR LOCK

(a) Install the door outside handle with two bolts.

(b–1) (w/ Power door lock)

Install the door lock and solenoid with three screws and one bolt.

(b–2) (w/o Power door lock)

Install the door lock with three screws.

(c) (w/ Power door lock)

Connect the connector.

(d) Install the link to the door outside handle.

3. INSTALL INSIDE LOCKING LINK AND KNOB

4. INSTALL OPENING CONTROL LINK

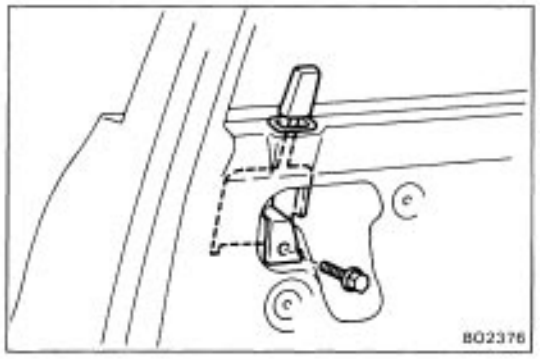

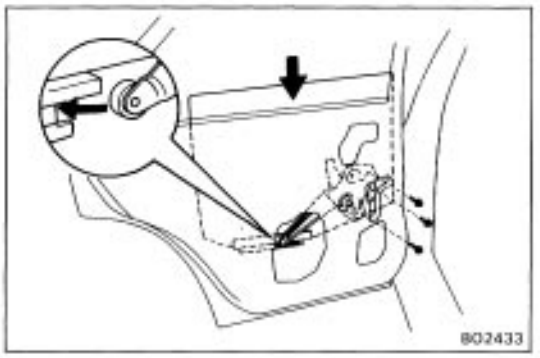

5. INSTALL DOOR GLASS AND window REGULATOR

(a) (w/ Power window)

Connect the connector.

(b–1) (w/o Power window)

Place the regulator through the service hole and install three mounting bolts.

(b–2)(w/ Power window)

Place–the regulator through the service hole and install four mounting bolts.

(c) Place the glass in the door cavity and connect the glass with the regulator arm.

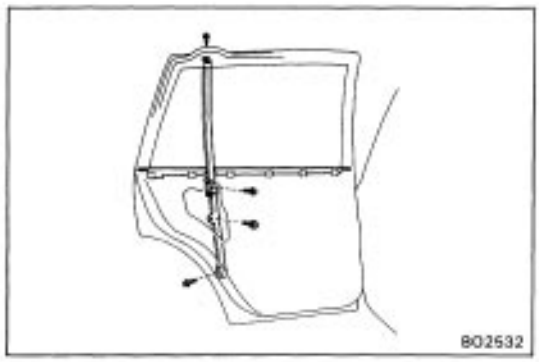

6. INSTALL QUARTER window GLASS with WEATHERSTRIP

7. INSTALL REAR DOOR BELT MOULDING

Insert the claw of the clips into the upper panel hole and push the moulding onto the panel.

8. INSTALL DIVISION BAR

9. INSTALL DOOR GLASS RUN

10. ADJUST DOOR GLASS

(See step 8 on page BO–10)

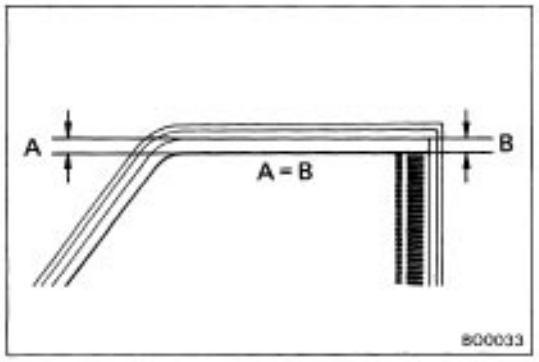

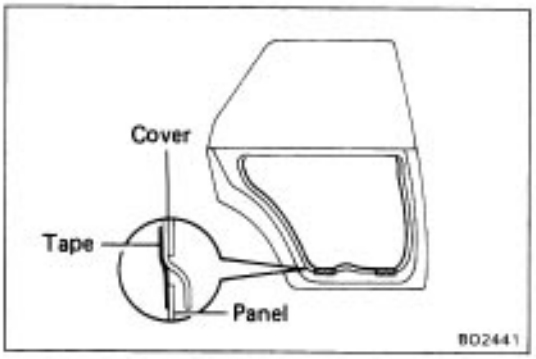

11. INSTALL SERVICE HOLE COVER

(a) Seal the service hole cover with adhesive.

(b) Insert the lower edge of the service hole cover into the panel slit.

(c) Seal the panel slit with cotton tape.

NOTICE: Do not block the trim clip seating with the tape.

12. (w/ PULL HANDLE)

INSTALL ARMREST BASE

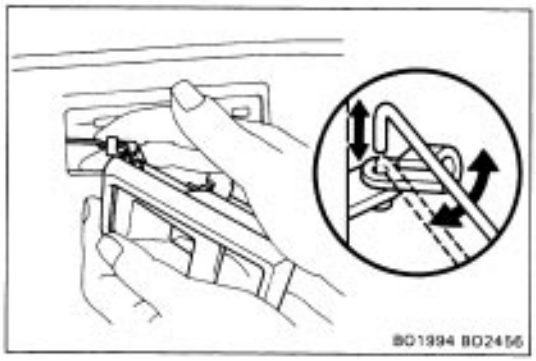

13. INSTALL DOOR TRIM

(See step 4 on page BO–21**)**

(a) (w/ Power window and power door lock)
Connect the connectors.

(b) Install the door trim with clips to the inside door panel by tapping.

14. INSTALL ARMREST OR PULL HANDLE

15. INSTALL DOOR INSIDE HANDLE

(a) Connect the handle to the control link.

(b) Push the inside handle in the door panel and slide it rearward.

(c) Install the screw.

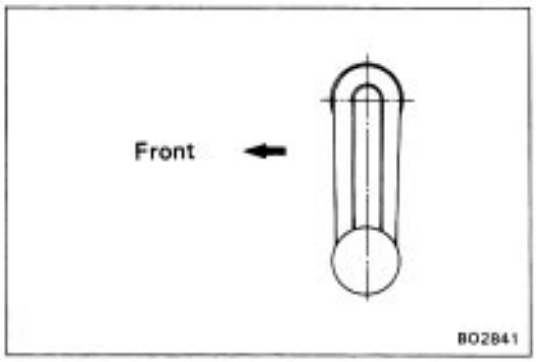

16. (w/o POWER window)

INSTALL REGULATOR HANDLE

with door window fully closed, install the plate and regulator handle with a snap ring as shown.



LUGGAGE COMPARTMENT LID

ADJUSTMENT OF LUGGAGE COMPARTMENT LID

HINT: Since the centering bolt is used as the luggage compartment lid hinge set bolt, the luggage compartment lid cannot be adjusted with it on. Substitute the bolt with washer for the centering bolt.

(a) Forward/rearward and left/right adjustments loosen the bolts.

(b) For vertical adjustment of front end of lid, increase or decrease the number of washers between the hinge and lid.

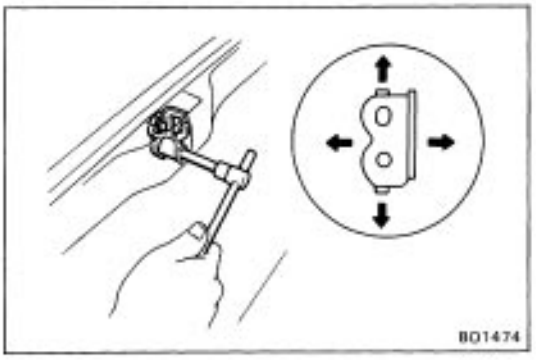

ADJUSTMENT OF LOCK STRIKER

Adjust the striker position by slightly loosening the striker mounting bolts, and hitting the striker with a brass bar and hammer.

Tighten the striker mounting bolts again.

(Sedan)

REMOVAL OF TORSION BAR

REMOVE TORSION BAR FROM LUGGAGE COMPARTMENT LID HINGE

(a) Install SST to the torsion bar on the hinge side.
SST 09804–24010

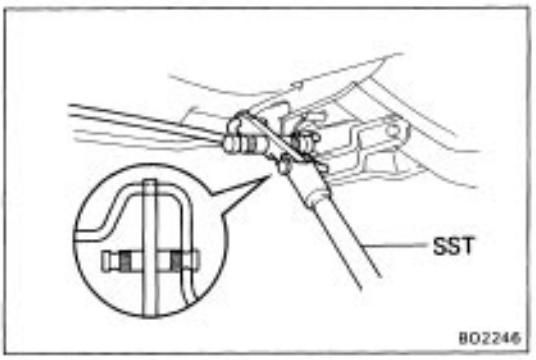

(b) Push down on SST, and pull the luggage compartment lid hinge from the torsion bar.

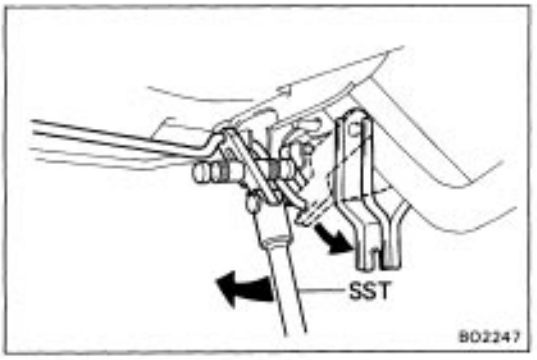

(c) Slowly lift SST, and remove the torsion bar from the torsion bar bracket with SST.

(d) Remove the torsion bar from the center bracket.

(e) Do the same for the other side.

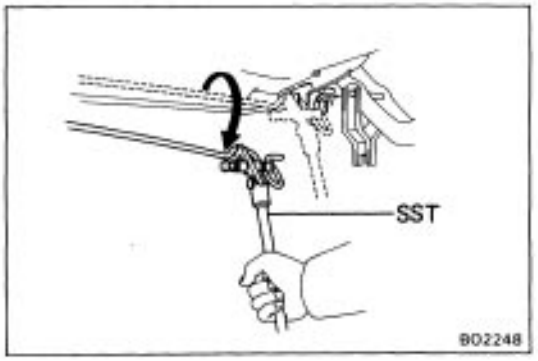

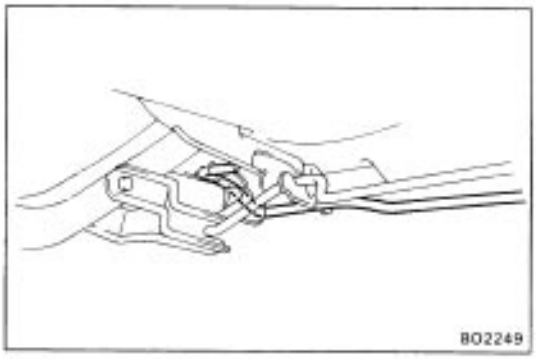

INSTALLATION OF TORSION BAR

INSTALL TORSION BAR TO LUGGAGE COMPARTMENT LID HINGE

(a) Insert the torsion bar into the bracket as shown.
(b) Connect the torsion bar to the center bracket.

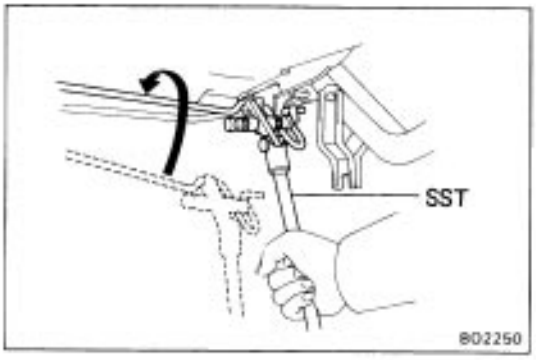

(c) Install SST to the torsion bar of the hinge side.
SST 09804–24010
(d) Slowly lift the torsion bar with SST and place on the torsion bar bracket.

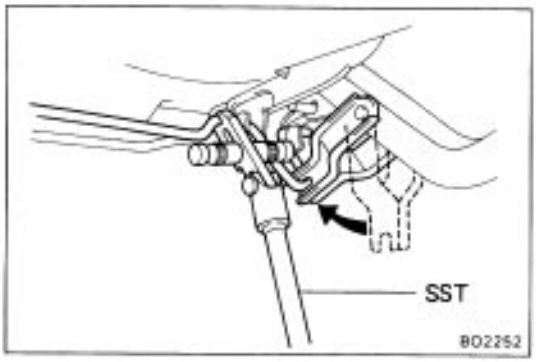

(e) Slowly push down SST, and install the torsion bar to the luggage compartment lid hinge.

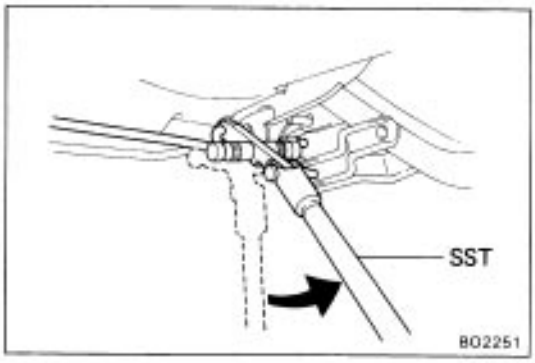

(f) Slowly lift SST, and install the torsion bar.
(g) Do the same for the other side.

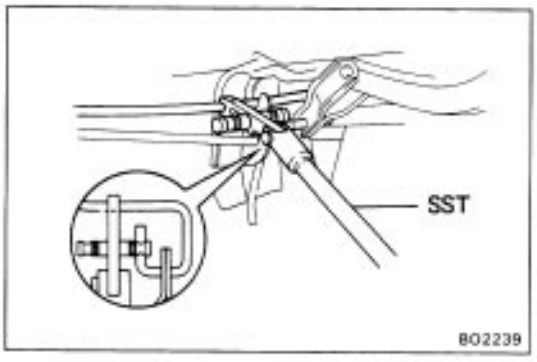

(Coupe)
REMOVAL OF TORSION BAR

REMOVE TORSION BAR FROM LUGGAGE COMPARTMENT LID HINGE

(a) Remove the torsion bar from the center bracket.
(b) Install SST to the torsion bar on the hinge side.
SST 09804–24010

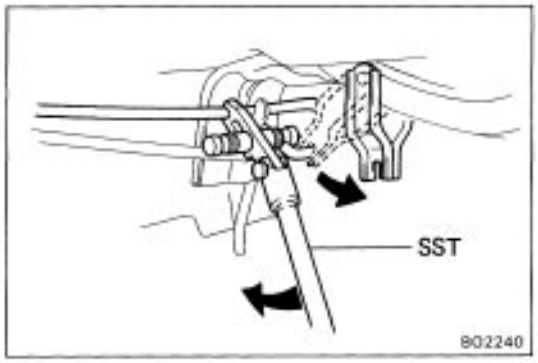

(c) Push down on SST, and pull the luggage compartment lid hinge from the torsion bar.

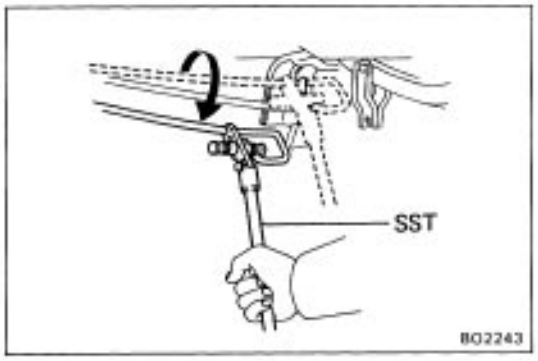

(d) Slow/y lift SST, and remove the torsion bar from the torsion bar bracket with SST.
(e) Do the same for the other side.

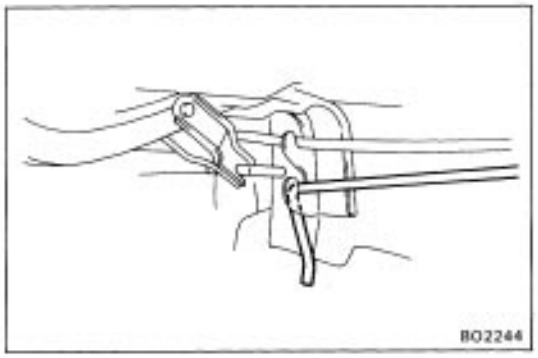

INSTALLATION OF TORSION BAR

INSTALL TORSION BAR TO LUGGAGE COMPARTMENT LID HINGE

(a) Insert the torsion bar into the bracket as shown.

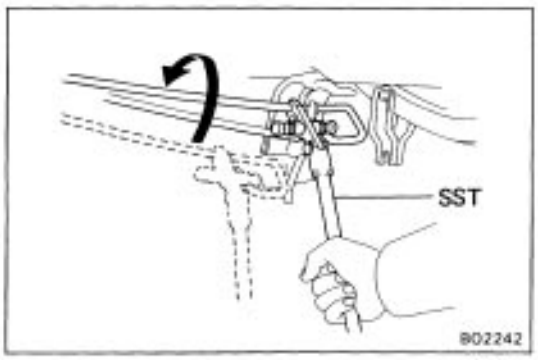

(b) Install SST to the torsion bar of the hinge side.
SST 09804–24010
(c) Slowly lift the torsion bar with SST and place on the torsion bar bracket.

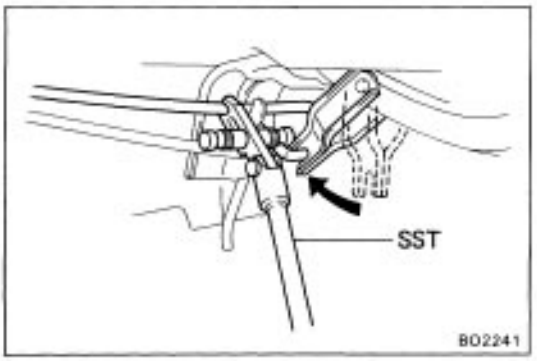

(d) Slowly push down SST, and install the torsion bar to the luggage compartment lid hinge.

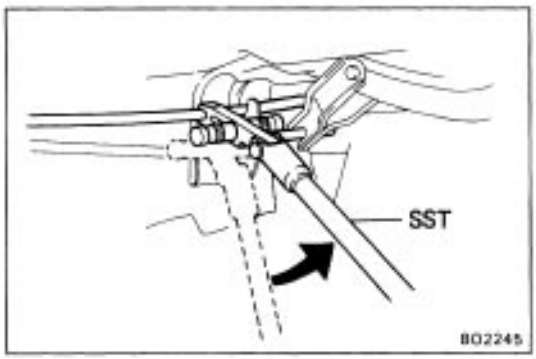

(e) Slowly lift SST, and install the torsion bar.
(f) Connect the torsion bar to the center bracket.
(g) Do the same for the other side.

BACK DOOR
COMPONENTS

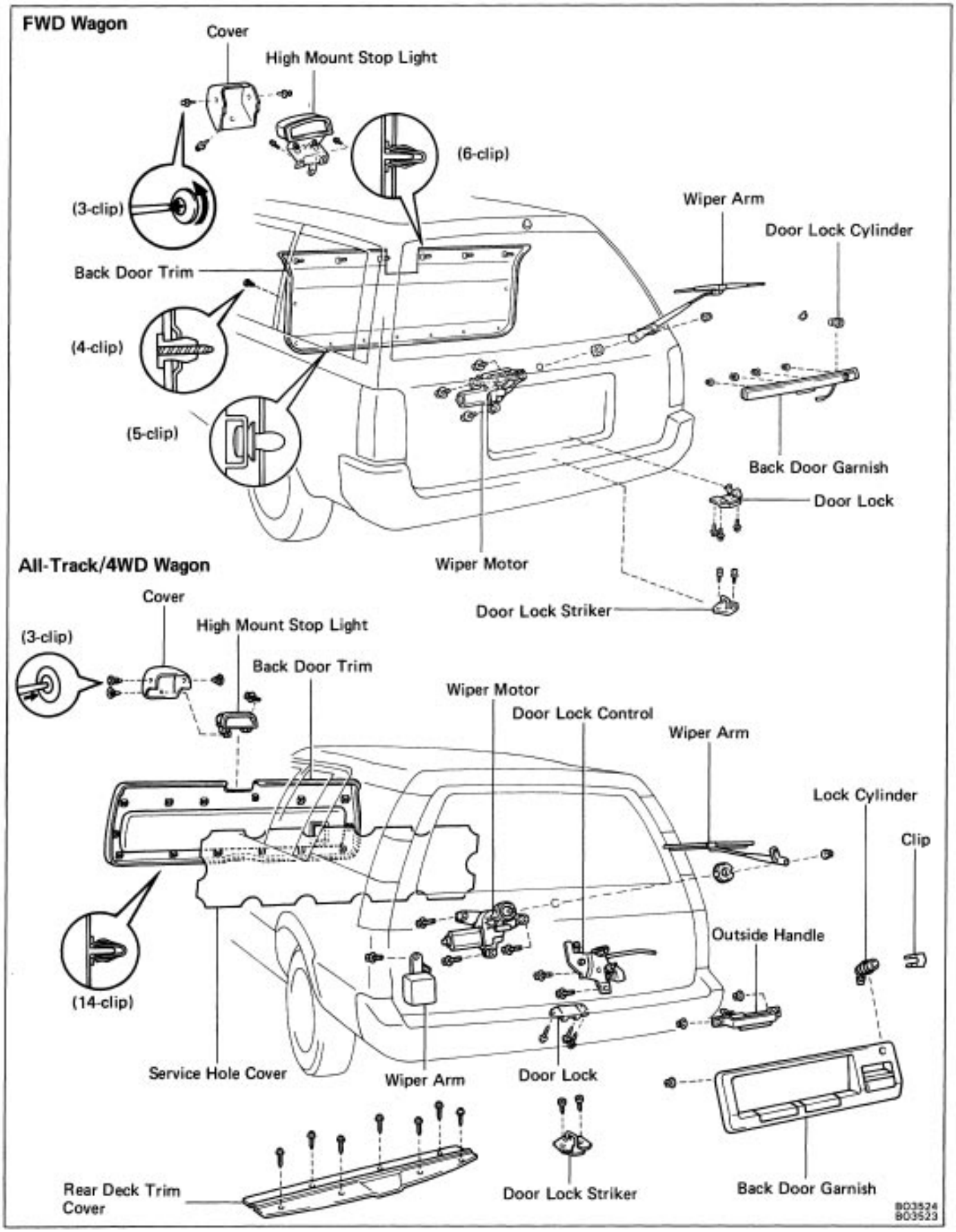

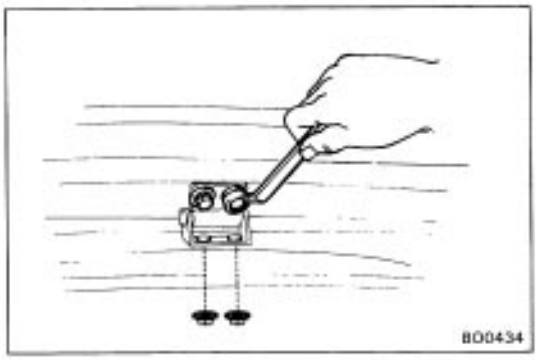

ADJUSTMENT OF BACK DOOR

1. ADJUST DOOR IN FORWARD/REARWARD AND LEFT/RIGHT DIRECTIONS

Adjust the door by loosening the hinge bolts.

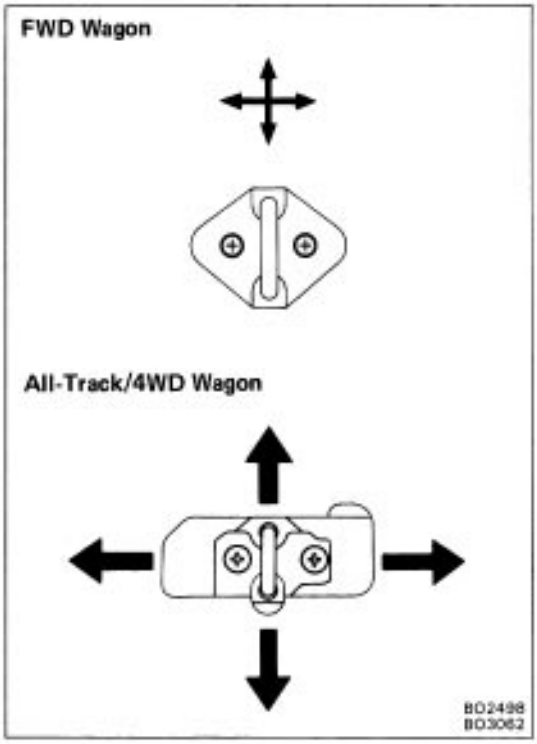

2. ADJUST DOOR LOCK STRIKER

Adjust the striker position by slightly loosening the striker mounting bolts, and hitting the striker with a hammer.

Tighten the striker mounting bolts again.

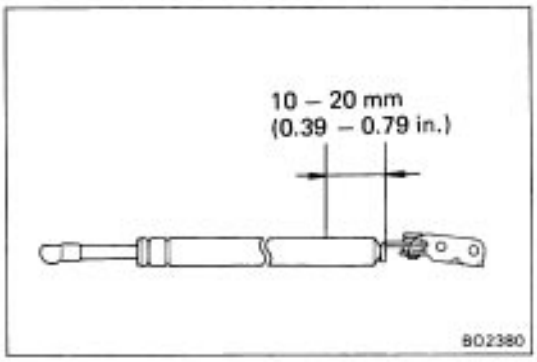

Back Door Damper Stay

NOTICE: Handling the damper.

(a) Do not disassemble the damper because the cylinder is filled with pressurized gas.

(b) If the damper is to be replaced, drill a 2.0 – 3.0 mm (0.079 – 0.118 in.) hole in the bottom of the removed damper cylinder to completely release the high pressure gas before disposing of it.

(e) When drilling, chips may fly out, so work carefully.

(d) The gas is colorless, odorless and non poisonous.

(e) When working, handle the damper carefully. Never score or scratch the exposed part of the piston rod, and never allow paint or oil to get on it.

(f) Do not turn the piston rod and cylinder with the damper fully extended.

MOULDING
Windshield Moulding
COMPONENTS

Sedan and FWD Wagon

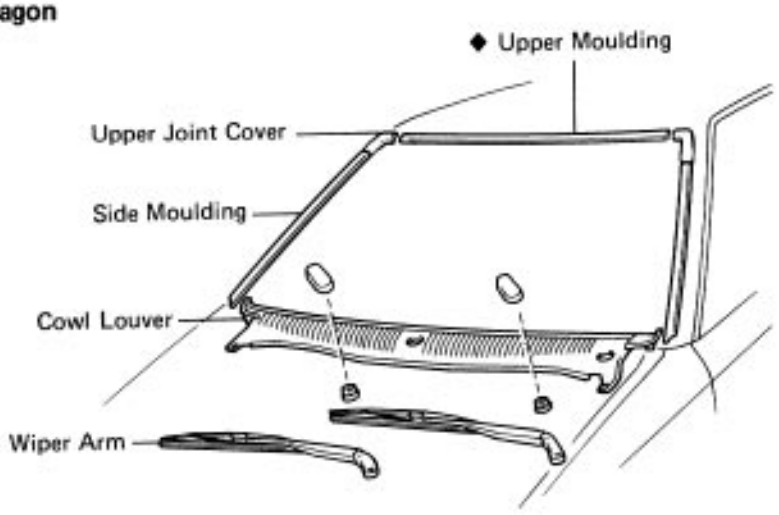

Coupe

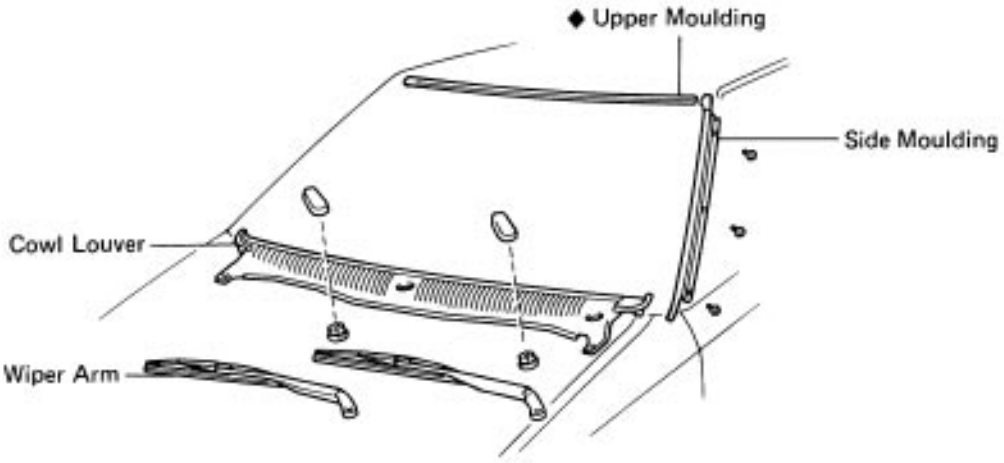

All-Track/4WD Wagon

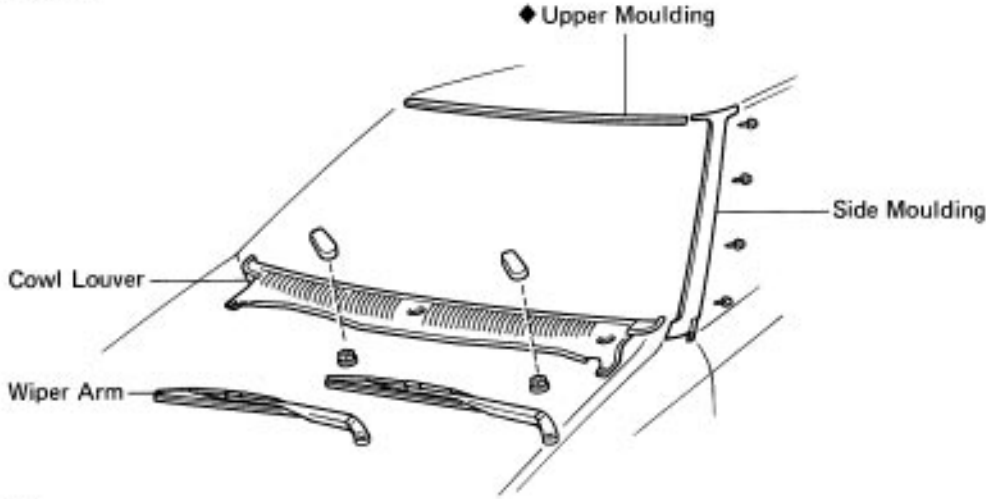

◆ Non-reusable part

BO2326
BO2327
BO2421

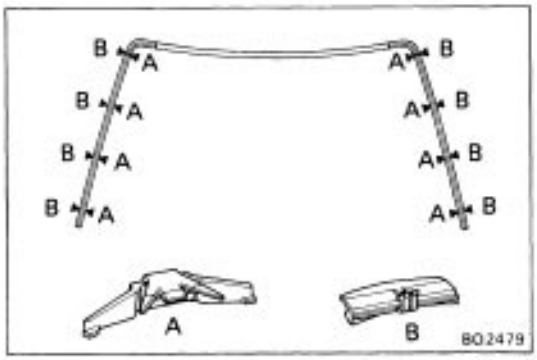

(Sedan and FWD Wagon)

REMOVAL OF WINDSHIELD MOULDING

Locations of clips (A) and fasteners (B) are as shown.

Carefully apply adhesive tape to protect the body.

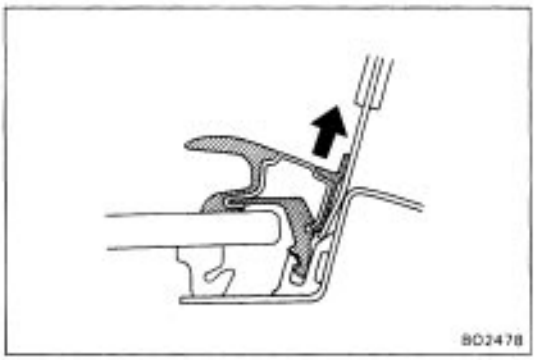

1. REMOVE SIDE MOULDING with UPPER JOINT COVER

(a) Insert the top of a scraper between the body and moulding.

(b) Pry up the scraper to loosen the moulding from the claws of the clips and fasteners.

HINT: Apply tape to the scraper blade to prevent scratching the vehicle body.

(c) Remove the moulding with upper joint cover.

2. REMOVE UPPER MOULDING

Using a knife, cut off the upper moulding as shown.

HINT: Do not damage the body.

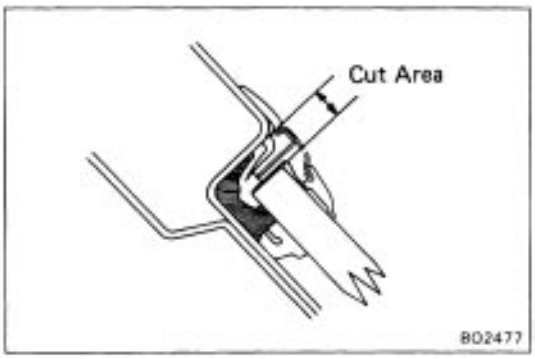

3. REMOVE WIPER ARM

4. REMOVE COWL LOUVER

Remove the screws and cow/ louver.

REPLACEMENT OF FASTENER

REPLACE FASTENER

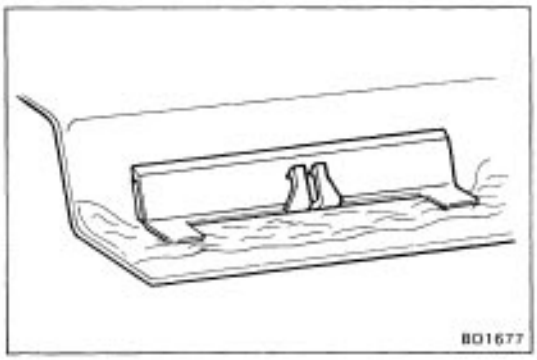

(a) Remove the damaged fastener.

(b) Cut off the old adhesive around the fastener installation area.

HINT: Be careful not to damage the body.

(c) Clean the installation area.

(d) Install new fastener onto the body.

INSTALLATION OF WINDSHIELD MOULDING

1. INSTALL COw/ LOUVER

Install the screws and cow/ louver.

2. INSTALL WIPER ARM

3. INSTALL NEW CLIP INTO MOULDING

Install the clip to the appropriate place on the moulding, where the clip would engage with the fastener.

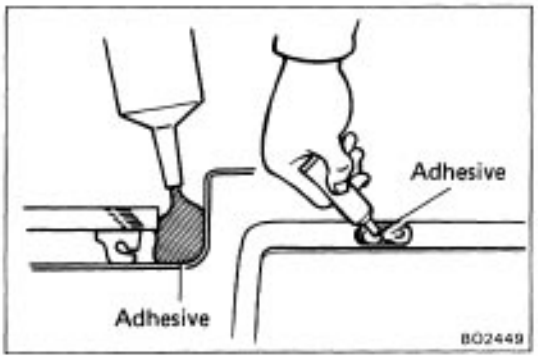

4. APPLY ADHESIVE AT NEW CLIP AND UPPER MOULDING INSTALLATION AREA

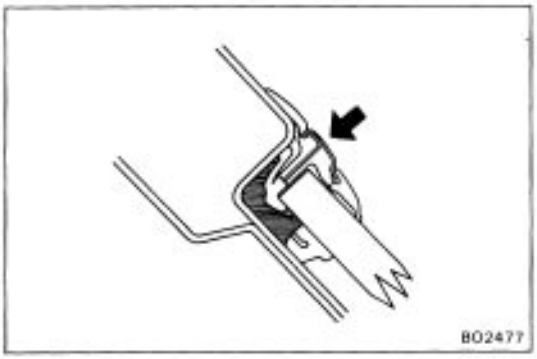

5. INSTALL UPPER MOULDING

Place the moulding onto the body and tap it by hand.

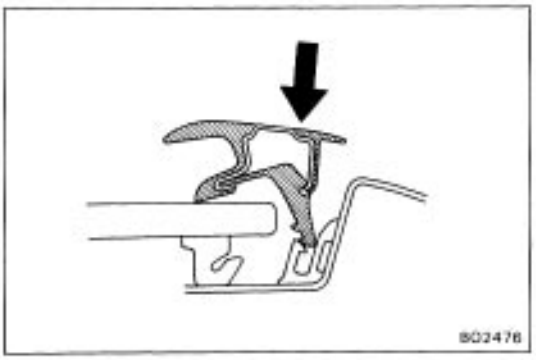

6. INSTALL SIDE MOULDING with UPPER JOINT COVER

(a) Place the moulding with upper joint cover onto the body.

(b) Tap the moulding with your hand to fasten the clips at the glass edge.

At the same time, install the fasteners by tapping them by hand.

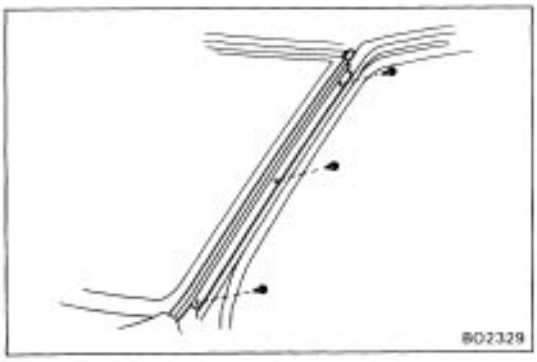

(Coupe)

REMOVAL OF WINDSHIELD MOULDING

1. REMOVE SIDE MOULDING

Remove three screws and the moulding.

2. REMOVE FOLLOWING PARTS:

(See steps 2 to 4 on page BO–32)

- Upper moulding
- w/per arm
- Cow/ louver

INSTALLATION OF WINDSHIELD MOULDING

1. INSTALL FOLLOWING PARTS:

(See steps 1 to 5 on pages BO–32 and 33)

- Cow/ louver
- w/per arm
- Upper moulding

2. INSTALL SIDE MOULDING

Install the moulding with three screws.

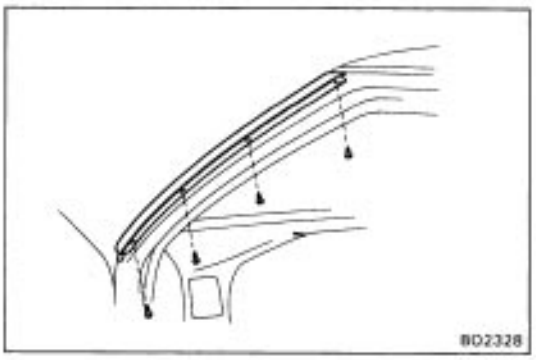

(All–Track/4WD Wagon)
REMOVAL OF WINDSHIELD MOULDING

1. REMOVE SIDE MOULDING

Remove four screws and moulding.

2. REMOVE FOLLOWING PARTS:

(See steps 2 to 4 on page BO–32)

- Upper moulding
- Wiper arm
- Cowl louver

INSTALLATION OF WINDSHIELD MOULDING

1. INSTALL FOLLOWING PARTS:

(See steps 1 to 5 on pages BO–32 and 33)

- Cowl louver
- Wiper arm
- Upper moulding

2. INSTALL SIDE MOULDING

Install the moulding with four screws.

Body Outside Moulding

COMPONENTS

Sedan

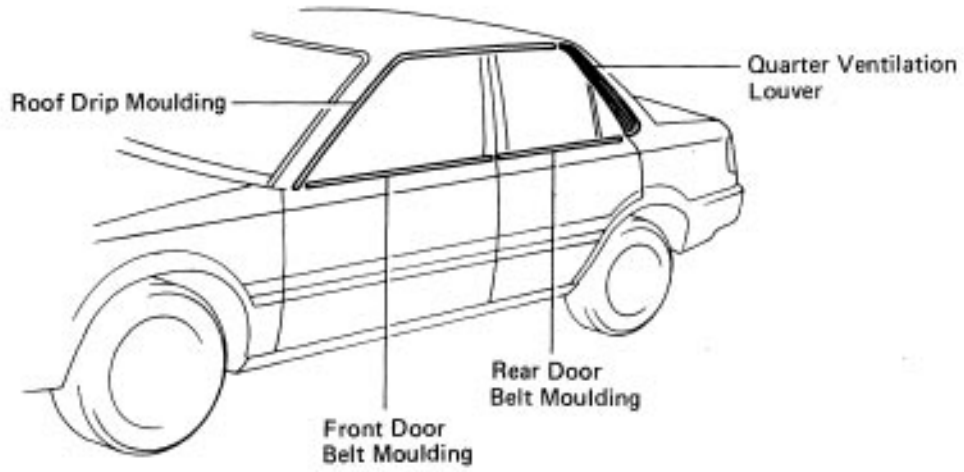

Coupe

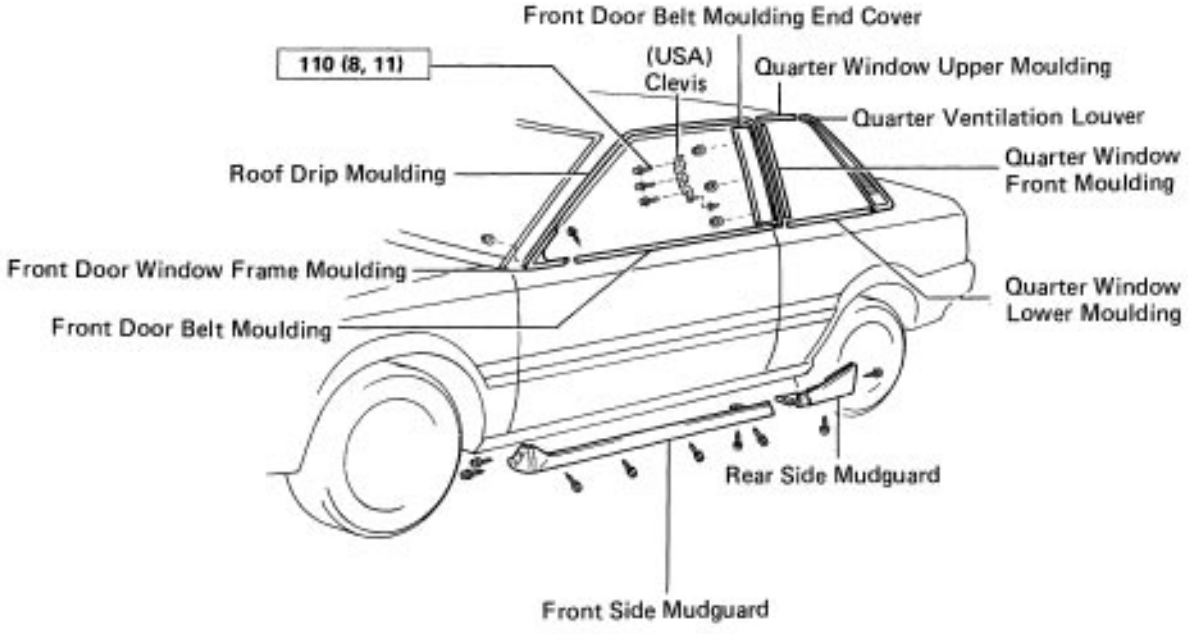

kg-cm (ft-lb, N·m) : Specified torque

BO2330
BO2538

COMPONENTS (Cont'd)

FWD Wagon

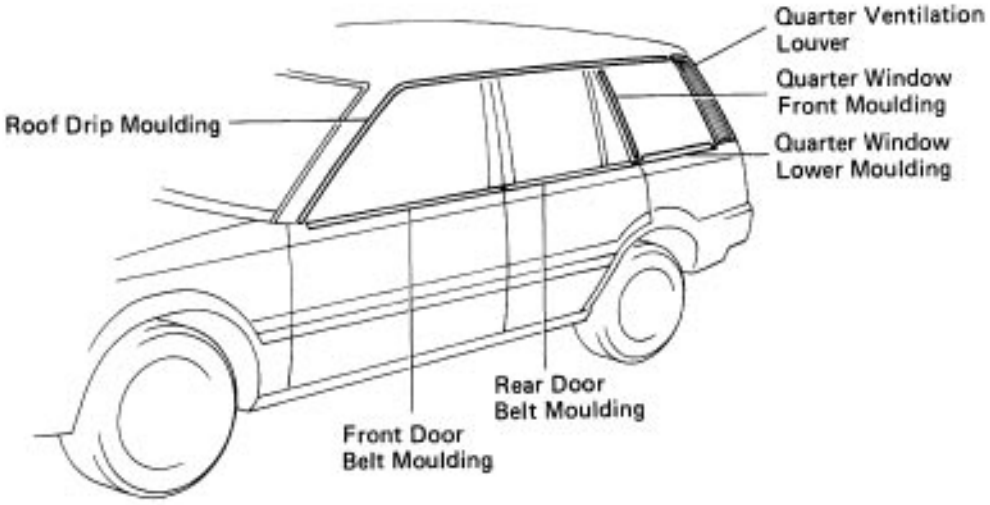

All-Track/4WD Wagon

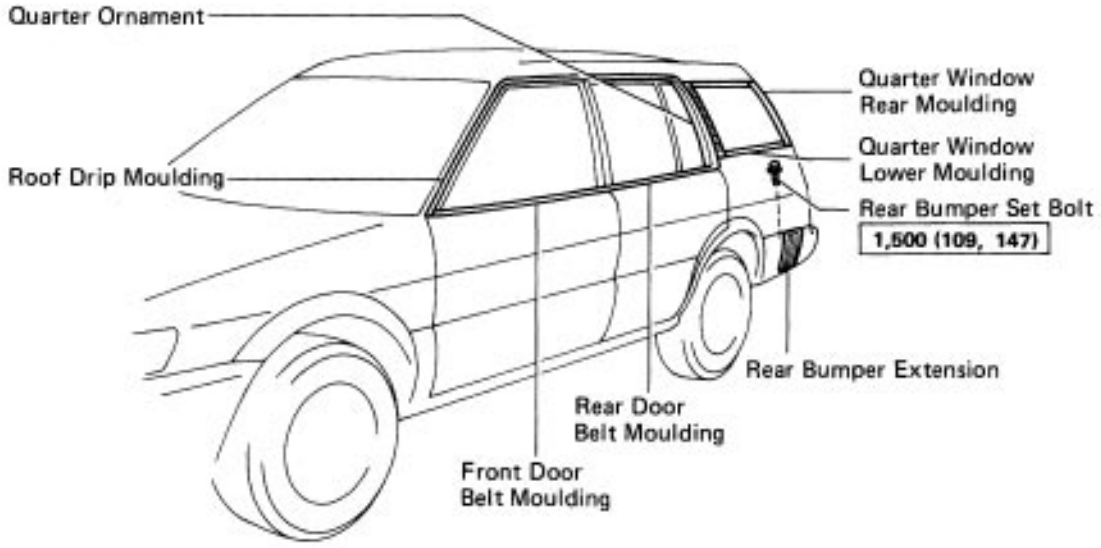

kg-cm (ft-lb, N-m) : Specified torque

BO2537
BO3063

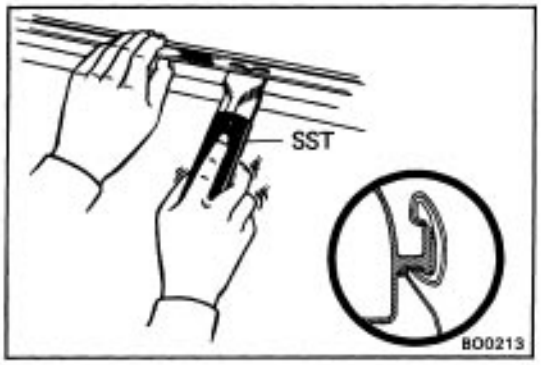

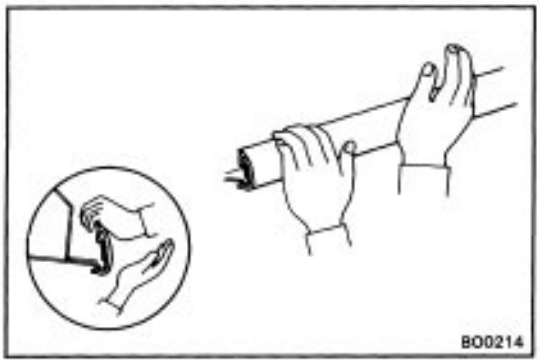

REMOVAL OF ROOF DRIP MOULDING

(See pages BO–35 and 36)

1. (USA)

REMOVE CLEVIS

Remove three bolts and the clevis.

2. REMOVE ROOF DRIP MOULDING

Using SST, pull off the roof drip moulding from the front end.

SST 09806–30010

INSTALLATION OF ROOF DRIP MOULDING

(See pages BO–35 and 36)

1. INSTALL ROOF DRIP MOULDING

Attach the upper edge of the moulding to the body flange.

Tap on the moulding by hand.

2. (USA)

INSTALL CLEVIS

Install three bolts and the clevis.

Torque: 110 kg–cm (8 ft–lb, 11 N–m)

REMOVAL OF FRONT DOOR BELT MOULDING

For Sedan and Wagon (See step 9 on page BO–8)

For Coupe (See step 6 on page BO–15)

INSTALLATION OF FRONT DOOR BELT MOULDING

For Sedan and Wagon (See step 10 on page BO– 11)

For Coupe (See step 9 on page BO–17)

REMOVAL OF REAR DOOR BELT MOULDING

(See step 9 on page BO–21)

INSTALLATION OF REAR DOOR BELT MOULDING

(See step 7 on page BO–23)

REMOVAL OF FRONT DOOR FRAME MOULDING

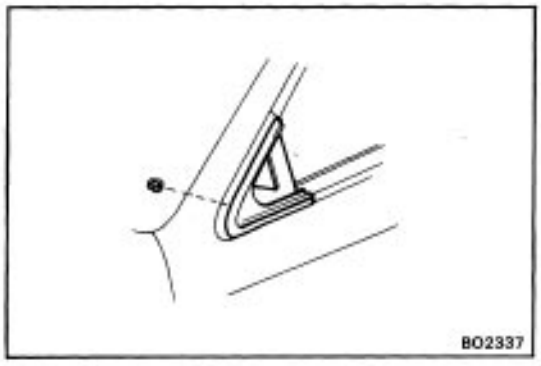

1. REMOVE REAR VIEW MIRROR

(See step 3 on page BO–8)

2. REMOVE FRONT DOOR BELT MOULDING

(See step 6 on page BO–15)

3. REMOVE FRONT DOOR window FRAME MOULDING

Remove the nut and frame moulding.

4. REMOVE FRONT DOOR BELT MOULDING END COVER

(See step 6 on page BO–15)

INSTALLATION OF FRONT DOOR FRAME MOULDING

1. INSTALL FRONT DOOR BELT MOULDING END COVER

(See step 9 on page BO–17)

2. INSTALL FRONT DOOR window FRAME MOULDING

Install the nut and frame moulding.

3. INSTALL FRONT DOOR BELT MOULDING

(See step 9 on page BO–17)

4. INSTALL REAR VIEW MIRROR

(See step 16 on page BO–11)

REMOVAL OF QUARTER window MOULDING

Coupe (See step 8 on page BO–53)

FWD Wagon (See step 7 on page BO–57)

INSTALLATION OF QUARTER WINDOW MOULDING

Coupe (See step 6 on page BO–54)

FWD Wagon (See step 2 on page BO–57)

(Sedan)

REMOVAL OF QUARTER VENTILATION LOUVER

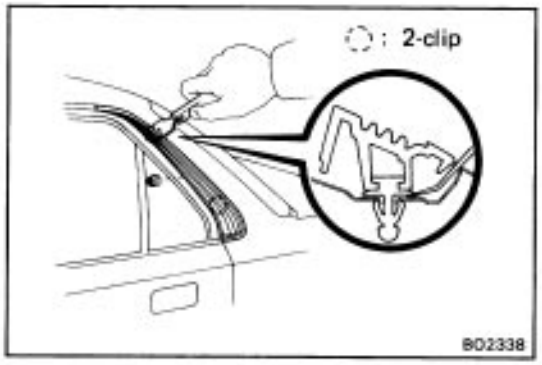



1. REMOVE FOLLOWING PARTS:

(See steps 2 to 3 on page BO–62)

- Rear seat back and cushion
- Roof side trim garnish

2. REMOVE QUARTER VENTILATION LOUVER

(a) Remove the nut.

(b) Using a scraper, pry out two clips and remove the louver.

HINT: Tape the scraper tip before use.

INSTALLATION OF QUARTER VENTILATION LOUVER

1. INSTALL QUARTER VENTILATION LOUVER

(a) Tap the louver by hand to fasten the clips.

(b) Install the nut.

2. INSTALL FOLLOWING PARTS:

- Roof side trim garnish
- Rear seat back and cushion (Coupe)

REMOVAL OF QUARTER VENTILATION LOUVER

(See steps 1 to 9 on pages BO–52 and 53)

INSTALLATION OF QUARTER VENTILATION LOUVER

(See steps 5 to 7 on pages BO–54 and 55)

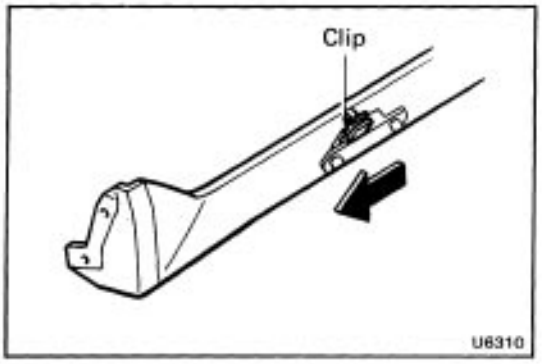

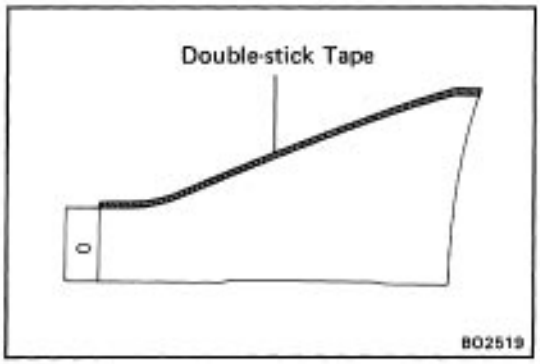

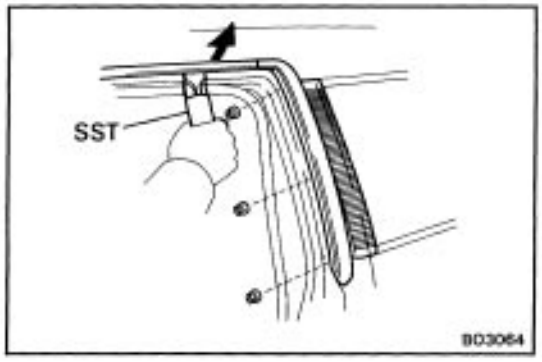

(FWD Wagon)

REMOVAL OF QUARTER VENTILATION LOUVER

(See step 6 on page BO–57)

INSTALLATION OF QUARTER VENTILATION LOUVER

(See step 3 on page BO–57)

REMOVAL OF SIDE MUDGUARD

REMOVE SIDE MUDGUARD

(a) Remove nine screws.
(b) Slide the front side mudguard forward to remove.
(c) Pull out the rear side mudguard.

INSTALLATION OF SIDE MUDGUARD

INSTALL SIDE MUDGUARD

(a) If reusing the rear mudguard, apply new double–stick tape on the inside of the rear mudguard as shown.
(b) Install the clip and rear side mudguard.
(e) Slide the front side mudguard rearward to install it.
(d) Install nine screws.

(ALL–Track/4WD Wagon)

REMOVAL OF QUARTER ORNAMENT

(See steps 1 to 6 on pages BO–58 to 59)

INSTALLATION OF QUARTER ORNAMENT

(See step 7 on page BO–60)

REMOVAL OF QUARTER window MOULDINGS

(See step 1 to 7 on pages BO–58 to 59)

INSTALLATION OF QUARTER WINDOW MOULDINGS

(See steps 6 to 7 on page BO–60)

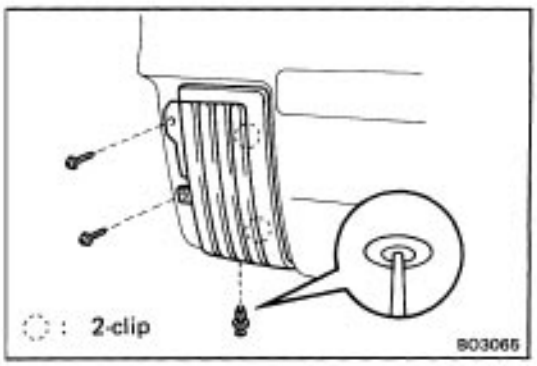

REMOVAL OF REAR BUMPER EXTENSION

(a) Remove the rear bumper.
(b) Remove two screws and one clip.
(e) Using a screwdriver, pry loose two clips and remove the rear bumper extension.

HINT: Tape the screwdriver tip before use.

INSTALLATION OF REAR BUMPER EXTENSION

(a) Place the boss on the hole, tap the extension to install it.
(b) Install two screws and one clip.
(c) Install the rear bumper.

Torque: 1,500 kg–cm (109 ft–lb, 147 N–m)

Side Protection Moulding

TOOLS AND SUPPLIES

Part No.	Part name	Quantity
08850-00051	Adhesive (Super– special) 20 g (0. 71 oz.)	1
	Cleaner (for cleaning body and removing body oil stains) Heat light	

Precautions for storing moulding material:

- Store in a cool place, avoiding direct sunlight, high temperatures and dust.
- The moulding is of polyvinyl chloride, so do not allow it to come in contact with thinner or other solvent, open flame, or boiling water.
- The storage time for the moulding, adhesive and Primer
  T is limited to about 9 months.

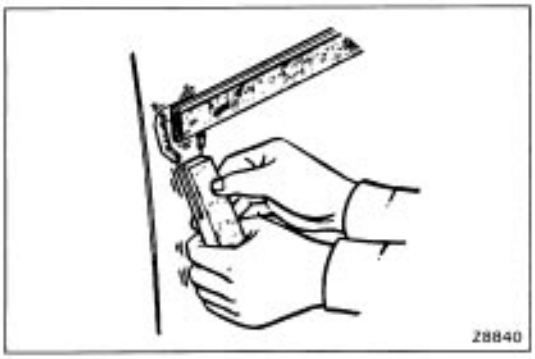

REMOVAL OF SIDE PROTECTION MOULDING

1. REMOVE ENDS OF MOULDING

Using a scraper, pry the moulding loose about 30 mm (1.18 in.) from the ends.

HINT: Apply tape to the scraper blade to prevent scratching the vehicle body.

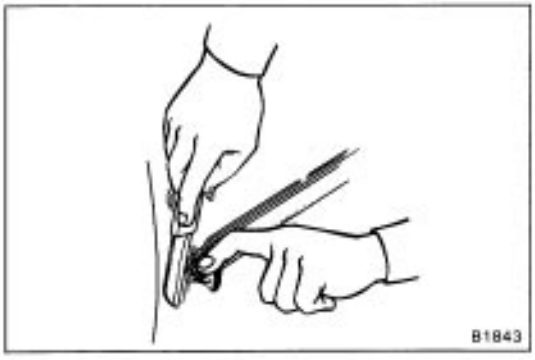

2. REMOVE MOULDING AND ADHESIVE

(a) Pull off the moulding by cutting the adhesive with a knife.

(b) Scrape off adhesive from the body with a cutter or sandpaper.

NOTICE:

- Remember that 30 – 80 mm (1.18 – 3.15 in.) of the ends of the moulding are glued tightly with a strong adhesive.
- Do not reuse moulding.

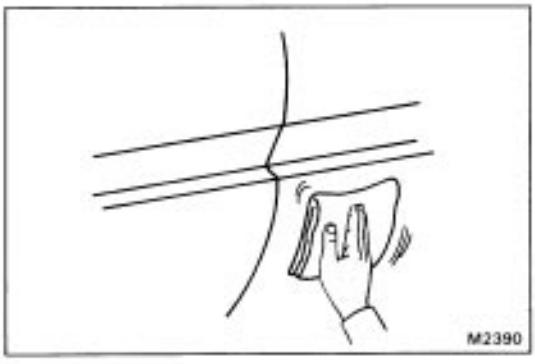

INSTALLATION OF SIDE PROTECTION MOULDING

1. CLEAN MOULDING MOUNTING SURFACE

Wipe off stains with cleaner.

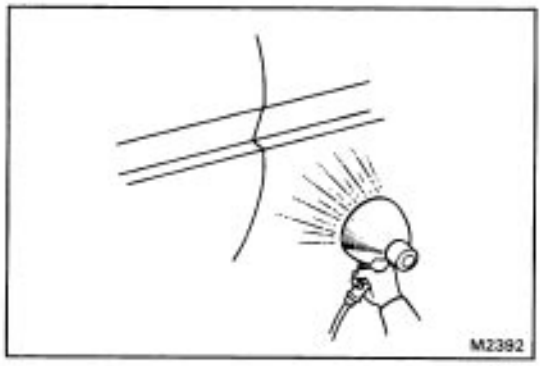

2. HEAT BODY MOUNTING SURFACE

Using a heat light, heat the body mounting surface to 30 – 50 ˚C (86 – 122 ˚F).

NOTICE: When the moulding is installed, the temperature of the mounting surface should be 20˚C (68˚F) or higher.

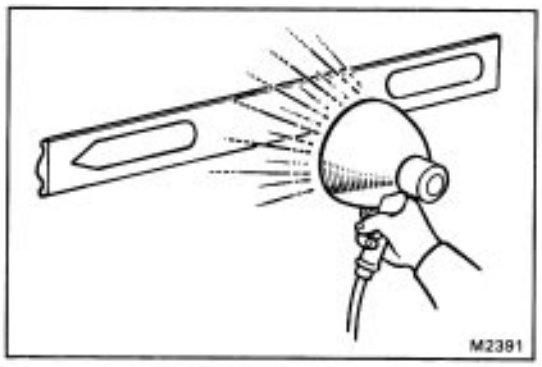

3. HEAT MOULDING

Using a heat light, heat the moulding to 30 – 60 ˚C (86 – 140 ˚F).

NOTICE: Do not heat moulding excessively.

The temperature should not be higher than 80 ˚C (176 ˚F).

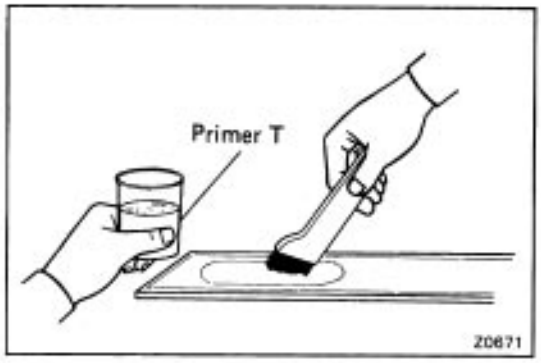

4. COAT MOULDING with PRIMER "T"

Using a brush, coat both of the punched out ends of the moulding with Primer T.

NOTICE:

- Let the Primer T dry for 30 seconds or more.
- Do not touch the Primer T coating.

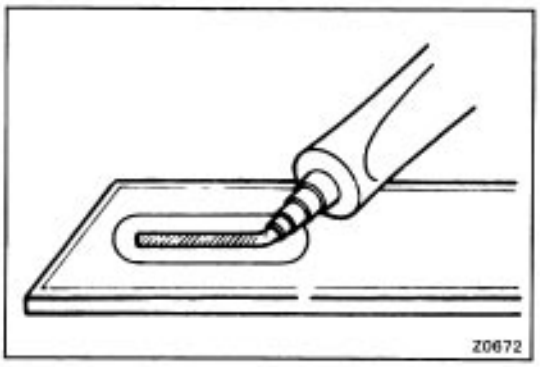

5. APPLY ADHESIVE TO MOULDING

Apply adhesive to both punched out ends of the moulding.

NOTICE: Install the moulding within 7 minutes after applying the adhesive.

6. LIFT MOULDING RELEASE SHEET FROM FACE OF MOULDING

NOTICE: When the moulding release sheet is removed, be sure that no dirt or dust can get onto the uncovered area.

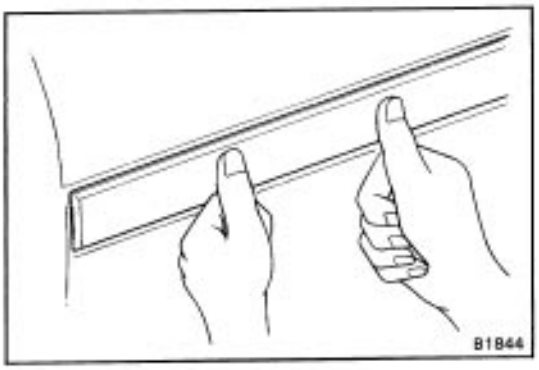

7. INSTALL MOULDING ALONG BODY PRESS LINE

Fit the moulding along the body press line, leaving the spaces shown in the illustration.

NOTICE:

- **Be sure that the body and moulding are heated to the proper temperature.**
- **Do not depress the adhesive–coated parts excessively just hold them down with your thumb.**
- **Scrape off any overflowing adhesive with a plastic spatula and clean the surface with a dry rag.**
- **After installation, do not wash the vehicle for 24 hours.**

Sedan

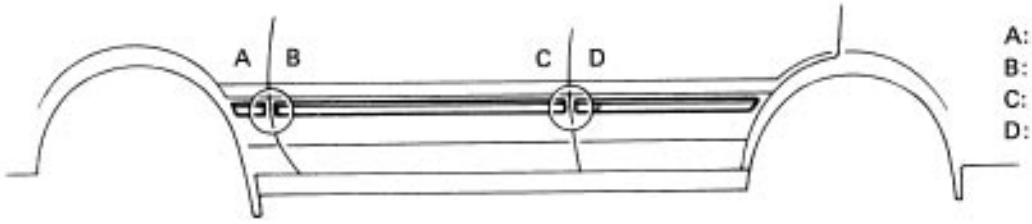

A: 2 mm (0.079 in.)
B: 2 mm (0.079 in.)
C: 2 mm (0.079 in.)
D: 2 mm (0.079 in.)

Coupe

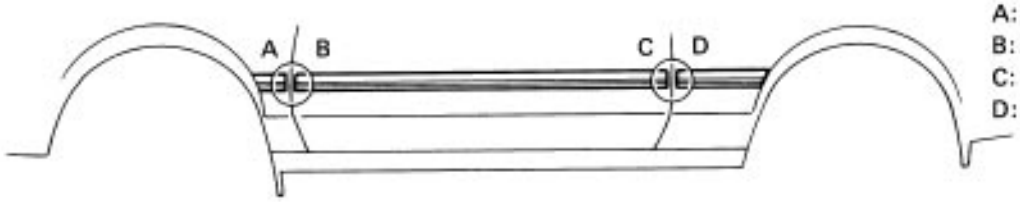

A: 2.5 mm (0.098 in.)
B: 4.5 mm (0.177 in.)
C: 2.5 mm (0.098 in.)
D: 2.5 mm (0.098 in.)

Wagon

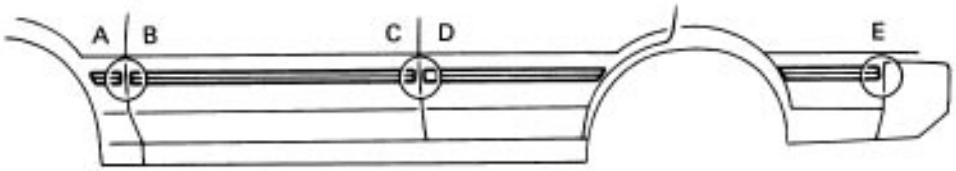

A: 2 mm (0.079 in.)
B: 2 mm (0.079 in.)
C: 2 mm (0.079 in.)
D: 2 mm (0.079 in.)
(FWD Wagon)
E: 2 mm (0.079 in.)
(All-Track/
4WD Wagon)
E: 3 mm (0.118 in.)

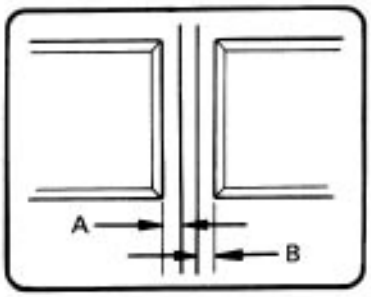

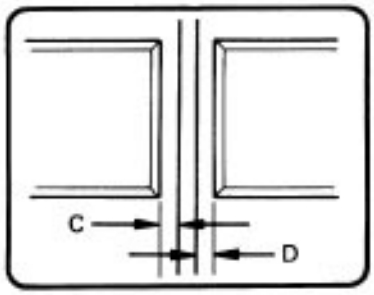

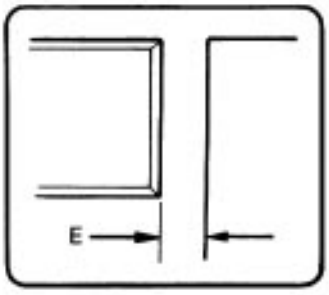

B02302
B02303
B02336
B02431

Rear window Moulding

COMPONENTS

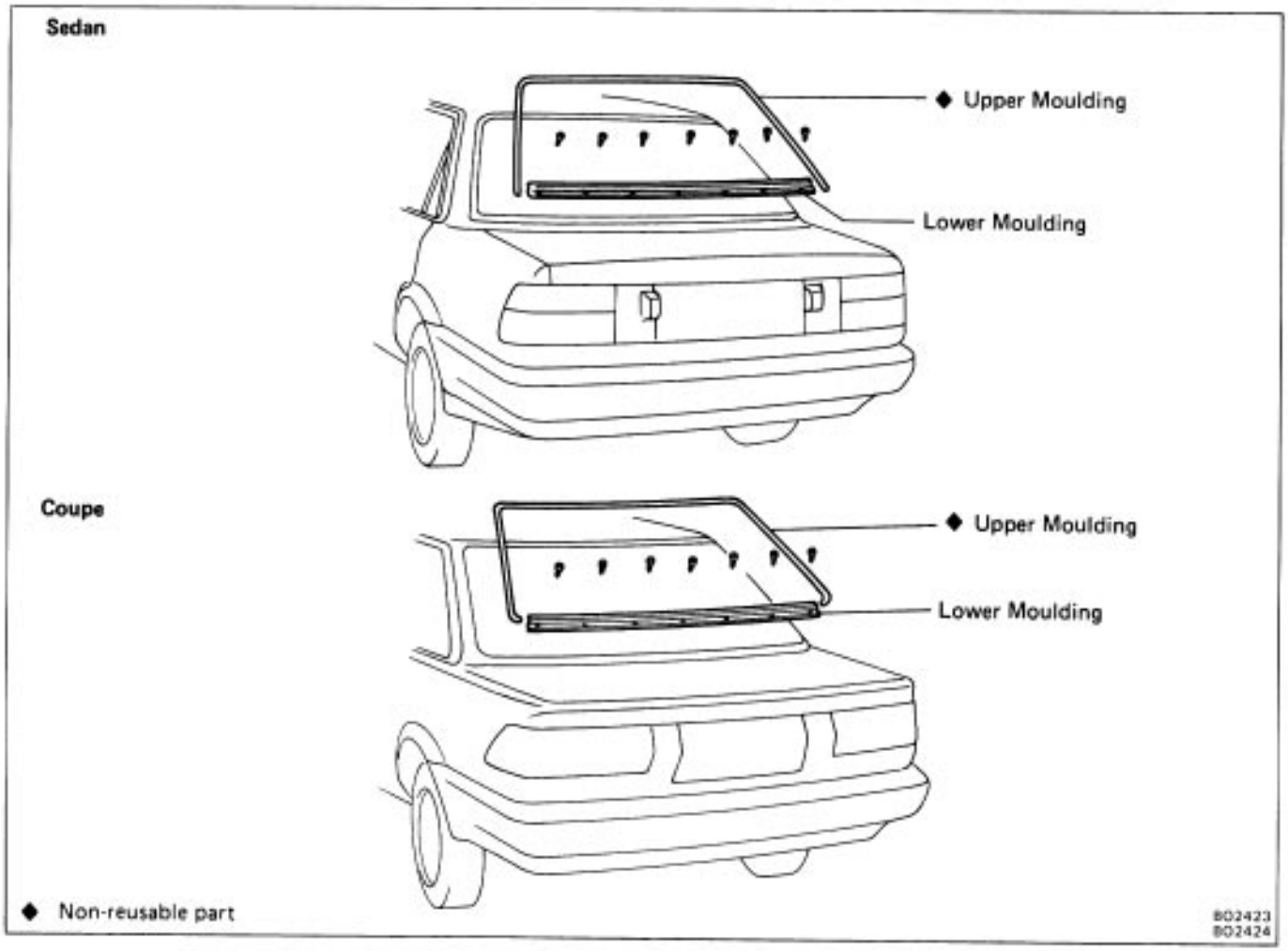

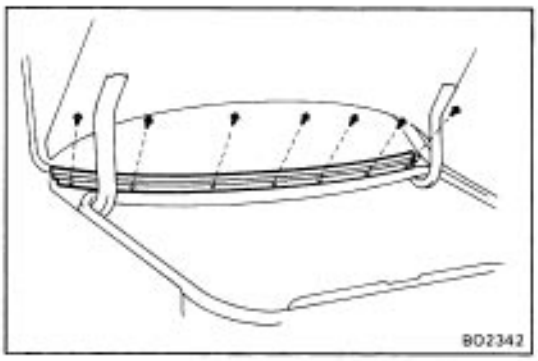

REMOVAL OF REAR WIDOW MOULDING

1. REMOVE LOWER MOULDING

Remove seven screws and the moulding.

2. REMOVE UPPER MOULDING

Remove the upper moulding in the same manner as the windshield upper moulding.

(See step 2 on page BO–32)

INSTALLATION OF REAR WINDOW MOULDING

1. INSTALL UPPER MOULDING

Install the upper moulding in the same manner as the windshield upper moulding.

(See steps 4 to 5 on page BO–33)

2. INSTALL LOWER MOULDING

Back Door Moulding

COMPONENTS

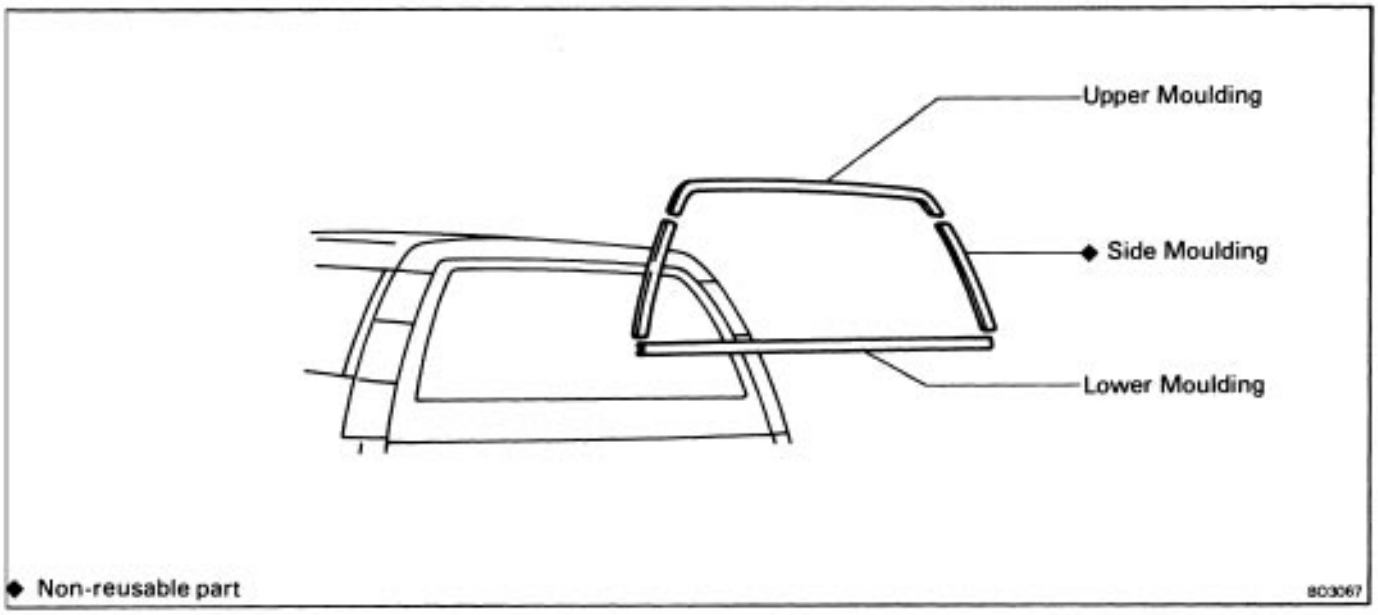

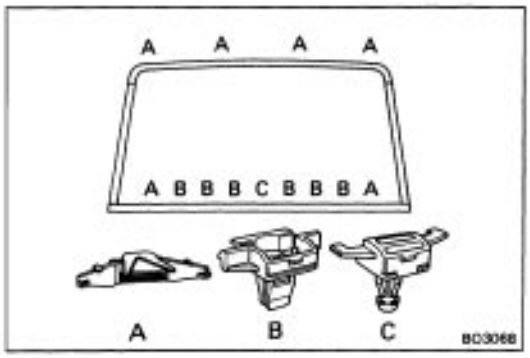

REMOVAL OF BACK DOOR MOULDING

There are three types of clip for moulding installation.
Locations of these clips are as shown.
Carefully apply adhesive tape to protect the body.

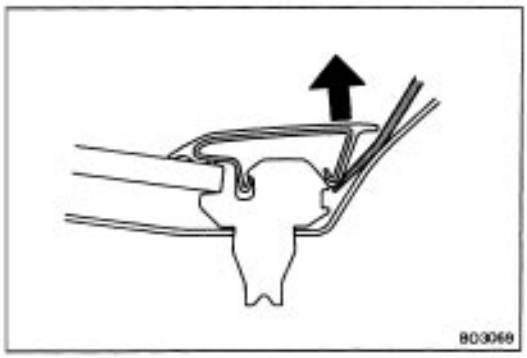

1. REMOVE LOWER MOULDING

(a) Insert the top of scraper between the body and moulding.

HINT: Tape the scraper tip before use.

(b) Pry up the scraper to loosen the moulding from the claws of the clips.

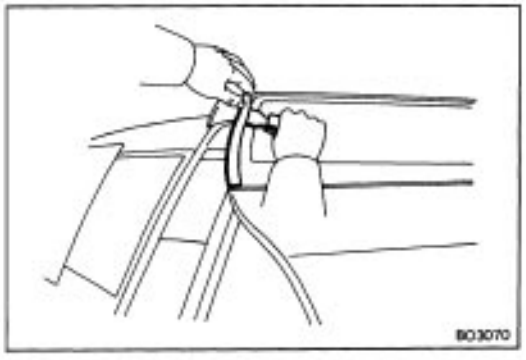

2. REMOVE SIDE MOULDING

Using a knife, cut loose the adhesive between the moulding and body panel.

HINT: Do not damage the body.

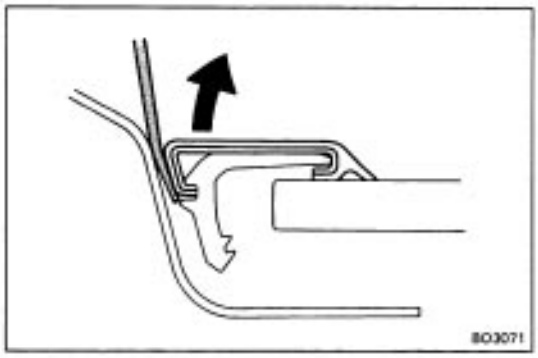

3. REMOVE UPPER MOULDING

(a) Insert the top of scraper between the body and moulding.

HINT: Tape the scraper tip before use.

(b) Pry up the scraper to loosen the moulding from the claws of the clips.

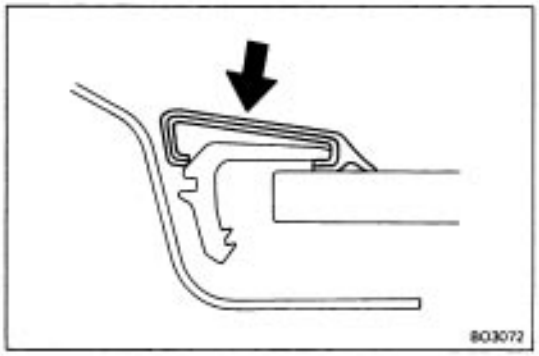

INSTALLATION OF BACK DOOR MOULDING

(See page BO–45)

1. INSTALL UPPER MOULDING

(a) Place the moulding onto the clips.

(b) Tap the moulding by hand to install it.

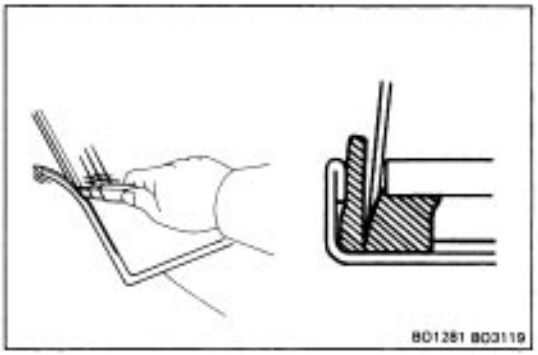

2. INSTALL SIDE MOULDING

(a) Cut off the old adhesive around the moulding installation area.

(b) Apply adhesive at the moulding installation area.

(c) Tap new moulding onto the body flange.

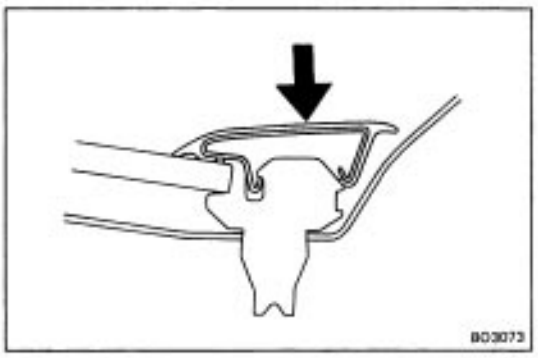

3. INSTALL LOWER MOULDING

(a) Place the moulding onto the clips.

(b) Tap the moulding by hand to install it.

WINDSHIELD

PREPARE ITEMS LISTED

Part name and Part No.	Contents of set	Quantity
Adhesive set 08850–00070 [0 – 15˚C (32 – 59˚ F)] 08850–00080 [15–35˚C(59–95˚F)l 08850–00090 [35 – 45˚C (95 – 113˚ F)]	Main agent 500 g (17.64 oz.) Hardening agent 75 g (2.65 oz.) Primer G [for glass] 20 g (0.71 oz.) Primer M [for body] 20 g (0.71 oz.) Sponge for applying primer Piano w/re 0.6 mm dia. x 1 m (0.024 in. dia x 39.37 in.) Cartridge	1 1 1 1 2 1 1
Dam kit 04562–30030	Dam Double–stick tape (for sticking on dam)	
	Sealant gun (for applying adhesive) Glass or steel sheet (for mixing adhesive) Putty spatula (for mixing adhesive and correcting adhered parts) Cleaner– (for cleaning adhering surfaces)	

Ambient temperature	Part No.	Part name
0 – 15°C (32 – 59°F)	08850-00070	windshield glass adhesive set No. 15
15 – 35°C (59 – 95°F)	08850-00080	windshield glass adhesive set No. 35
35 – 45°C (95 – 113°F)	08850-00090	windshield glass adhesive set No. 45

1. CHOOSE SUITABLE ADHESIVE SET

Use an adhesive set suitable for the ambient temperature.

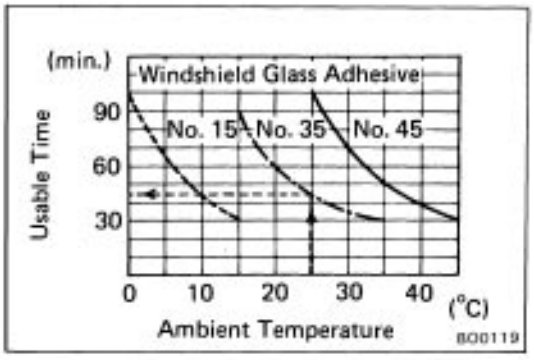

2. CHECK ADHESIVE USABLE TIME

After mixing main and hardening agents, finish glass installation within the specified time as shown.

Example: For glass installation in an ambient temperature of 25˚C (77 ˚F), apply adhesive set No. 35 within 45 minutes.

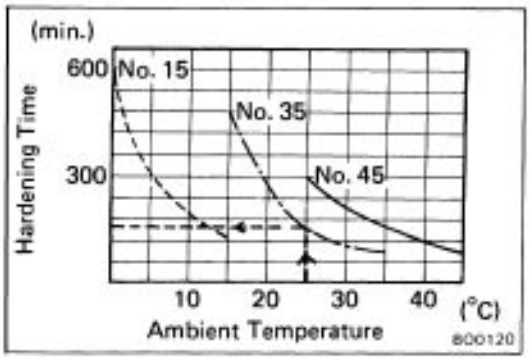

3. CHECK ADHESIVE HARDENING TIME

After main and hardening agents are mixed, leak tests should be made only after the hardening time has elapsed.

Example: The hardening time for adhesive set No. 35 with an ambient temperature of 25 ˚C (77˚F) is 2 1/2 hours.

NOTICE: Do not drive the vehicle until at least double the hardening time has elapsed.

COMPONENTS

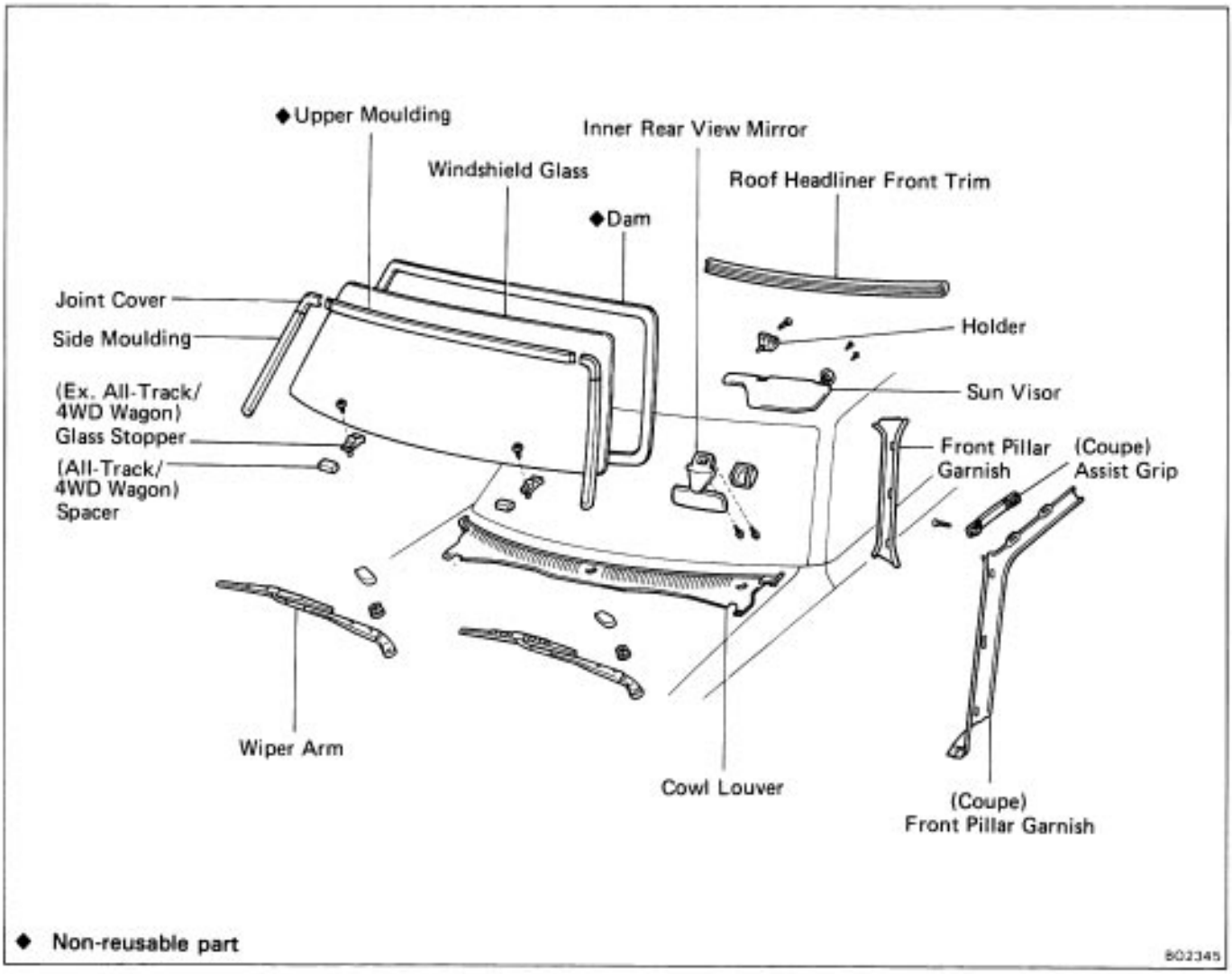

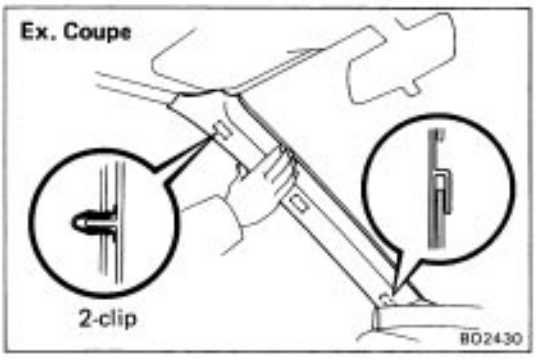

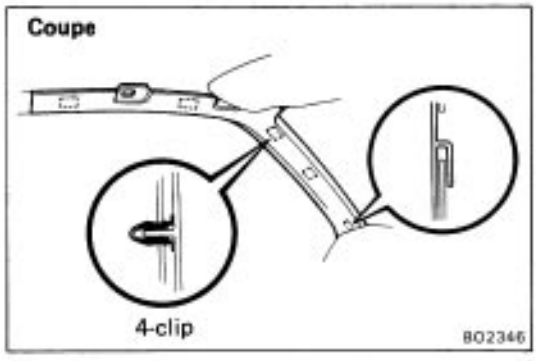

REMOVAL OF WINDSHIELD

1. REMOVE FRONT PILLAR GARNISH

(a) (Ex. Coupe)

Pry out two clips by your hand.

(b) (Coupe)

Remove two bolts and the assist grip, then remove four clips by your hand.

(c) Pull the garnish upward to remove it.

2. REMOVE FOLLOWING PARTS:

(a) Inner rear view mirror, sun visors and holders

(b) Hood, w/per arms and roof headliner front trim

3. REMOVE WINDSHIELD MOULDING

Sedan and FWD Wagon (See page BO–32)

Coupe (See page BO–33)

All–Track/4WD Wagon (See page BO–34)

4. (Sedan and FWD Wagon)

REMOVE CLIPS

Be careful not to damage the clips when removing them from around the glass.

HINT: It is not necessary to remove the fasteners but damaged fasteners should be replaced.

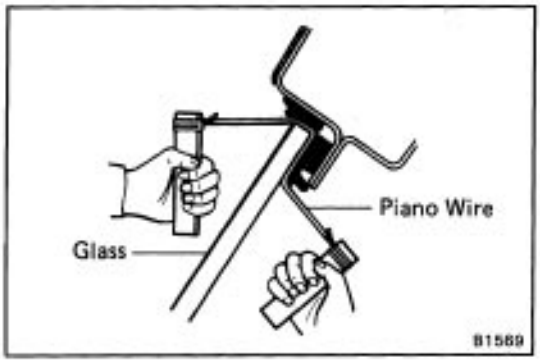

5. REMOVE WINDSHIELD GLASS

(a) Push piano w/re through from the interior.

(b) Tie both w/re ends to a wooden block or like object.

HINT: Apply adhesive tape to the outer surface to keep the surface from being scratched.

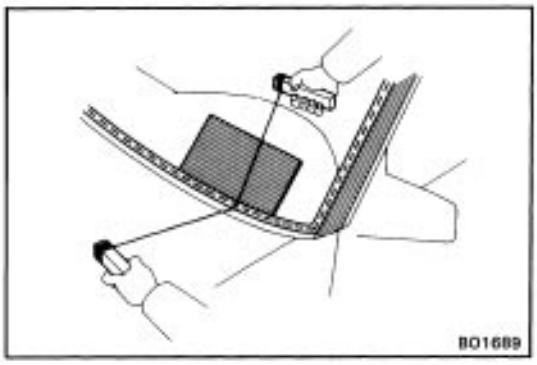

NOTICE: When separating, take care not to damage the paint and interior and exterior ornaments.

To prevent scratching the safety pad when removing the windshield, place a plastic sheet between the piano wire and safety pad.

(c) Cut the adhesive by pulling the piano w/re around it.

(d) Remove the glass.

NOTICE: Leave as much of the adhesive on the body as possible when cutting off the glass.

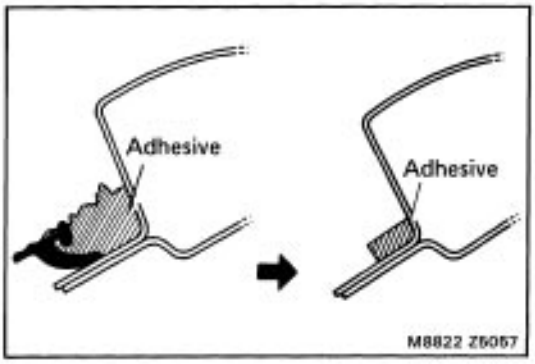

PREPARATION FOR INSTALLATION

1. CLEAN AND SHAPE CONTACT SURFACE OF BODY

(a) Remove any dam remaining on the body.

(b) Cut away any rough areas with a knife.

HINT: Leave as much of the adhesive on the body as possible.

(c) Clean the cutting surface of the adhesive with a piece of cloth saturated in cleaner.

HINT: Even if all the adhesive has been removed, clean the body.

2. IF NECESSARY, REPLACE FASTENERS

(See page BO–32)

3. CLEAN REMOVED GLASS BEFORE INSTALLATION

(a) Using a scraper, remove the adhesive sticking to the glass.

(b) Clean the glass with cleaner.

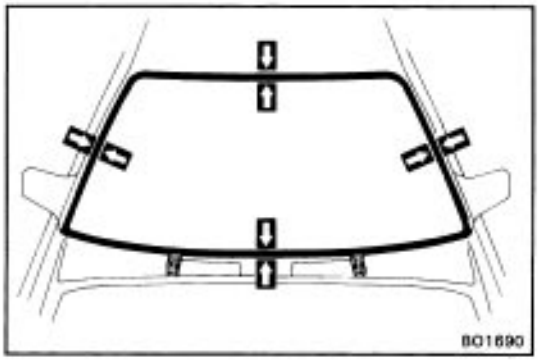

4. POSITION GLASS

(a) (Ex. All–Track/4WD Wagon)
Place glass in correct position onto the stoppers.
(b) (All–Track/4WD Wagon)
Place glass in correct position onto the spacers.
(c) Check that all contacting parts of the glass rim are perfectly even and do not make contact with the fasteners.
(d) Mark reference marks between the glass and body.
(e) Remove the glass.

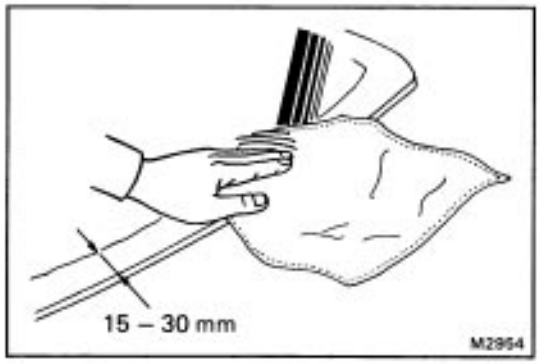

INSTALLATION OF WINDSHIELD

(See page BO–47)

1. CLEAN CONTACT SURFACE OF GLASS

Using cleaner, clean the contact surface 15 – 30 mm (0.59 – 1.18 in.) wide around the entire glass rim.

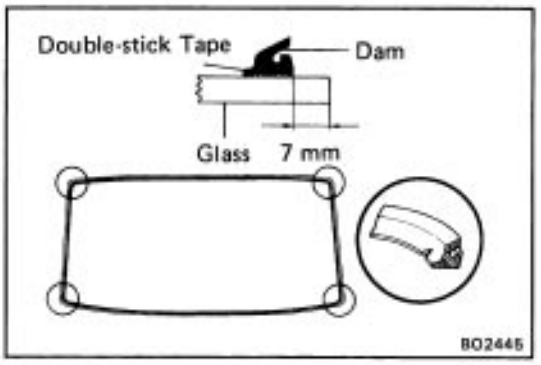

2. INSTALL DAM

(a) Apply double–stick tape at a point 7 mm (0.276 in.) from the glass rim.
(b) Place the dam on the double–stick tape.
HINT: Cut a V–wedge into the corner folds of the dam.
NOTICE: Do not touch the glass face after cleaning it.

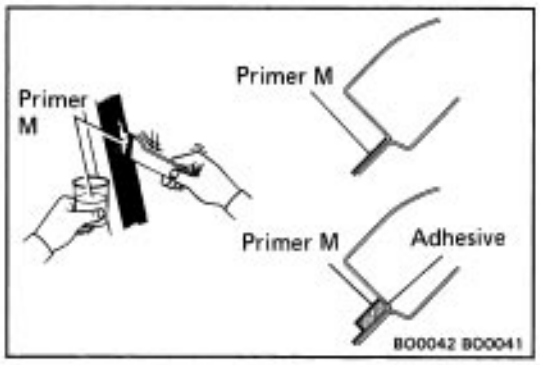

3. COAT CONTACT SURFACE OF BODY with PRIMER ”M”

Using a brush, coat the contact surface on the body with Primer M.
NOTICE:

- Let the Primer coating dry for 10 minutes or more. Make sure that the installation of the glass is finished within 2 hours.
- Use care not to leave any part of the contact surface uncoated or excessively coated, as Primer M and G serve to boost the adhesive power of the adhesive to the glass or body.
- Do not keep any of the opened Primer M and G for later use.

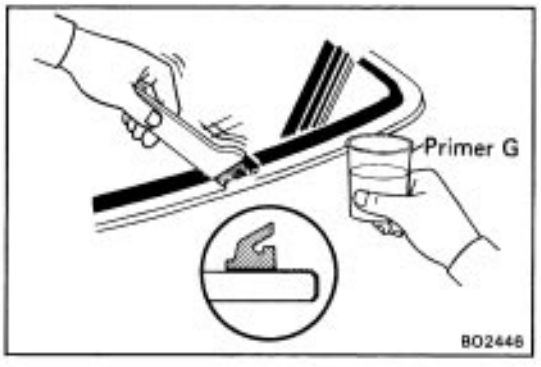

4. COAT CONTACT SURFACE OF GLASS with PRIMER ”G”

(a) Using a brush or sponge, coat the edge of the glass and the contact surface with Primer G.
(b) Before the Primer dries, wipe any excess off with a clean cloth to avoid too thick a coat.
NOTICE: Be sure that installation of the glass is finished within 70 minutes.

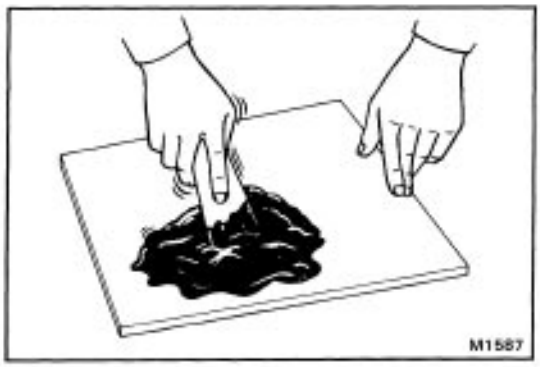

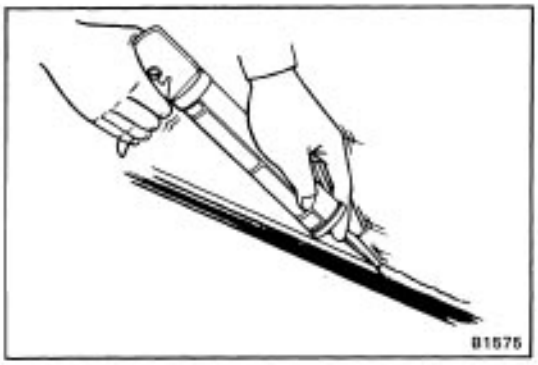

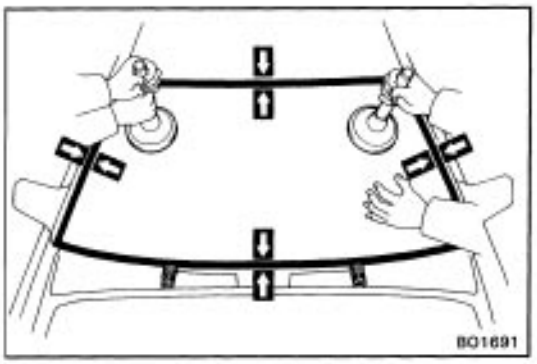

5. MIX ADHESIVE COATING

NOTICE:

- Be sure that installation of the glass is finished within usable time. (See step 2 on page BO–47)
- The mixture should be made in 5 minutes or less.

(a) Thoroughly clean the glass plate and putty spatula with solvent.

(b) Thoroughly mix 500 g (17.64 oz.) of the main agent and 75 g (2.65 oz.) of the hardening agent on a glass plate or like object with a putty spatula.

6. APPLY ADHESIVE

(a) Cut off the tip of the cartridge nozzle to make a hole 5 mm (0.20 in.) in diameter. Fill the cartridge with adhesive.

(b) Load the cartridge into the sealer gun.

(c) Coat the glass with adhesive on all contact surfaces along the ridge.

Adhesive height: If adhesive remains on body
3.5–5.0 mm (0.138–0.197in.)
If no adhesive remains on body
8 – 10 mm (0.31 – 0.39 in.)

7. INSTALL GLASS

(a) Position the glass so that the reference marks are lined up, and press in gently along the rim.

(b) Using a spatula, apply adhesive on the glass rim.

(c) Use a spatula to remove any excess or protruding adhesive.

(d) Fasten glass securely until the adhesive sets.

8. INSPECT FOR LEAKS AND REPAIR

(a) Perform a leak test after the hardening time has elapsed.

(b) Seal any leak with auto glass sealer.
Part No. 08833–00030 or equivalent

9. INSTALL WINDSHIELD MOULDING

(See pages BO–32 to 34)

10. INSTALL FOLLOWING PARTS

(a) wiper arms

(b) Inner rear view mirror, sun visors and holders

(c) Front pillar garnish, assist grip and roof headliner front trim

11. INSTALL AND ADJUST HOOD

(See pages BO–3 and 4)

NOTICE: Wait at least twice the setting time before driving the car.

QUARTER window GLASS

Coupe

PREPARE ITEMS LISTED

Part name and No.	Contents of set
Butyl tape set (08850–00065)	Butyl tape 9 mm dia. x 2,500 mm (0.35 x 98.43 in.) Primer 5 cc (0.17 fl.oz.) Sponge (for applying primer) Piano wire 1 mm dia. x 600 mm (0.04 x 23.62 in.) (for slicing off glass)
Materials required	Cleaner (for cleaning adhering surfaces)

COMPONENTS

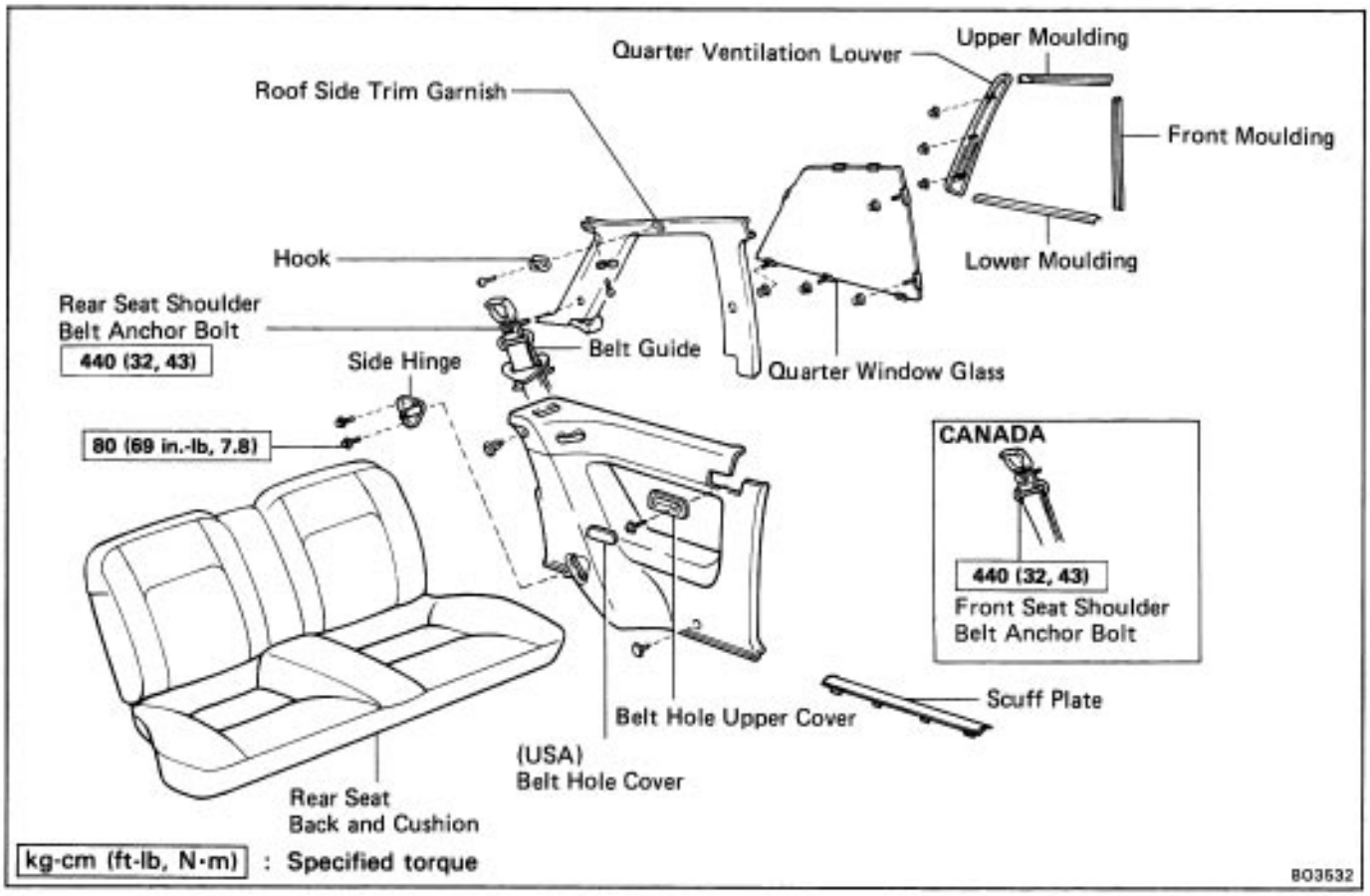

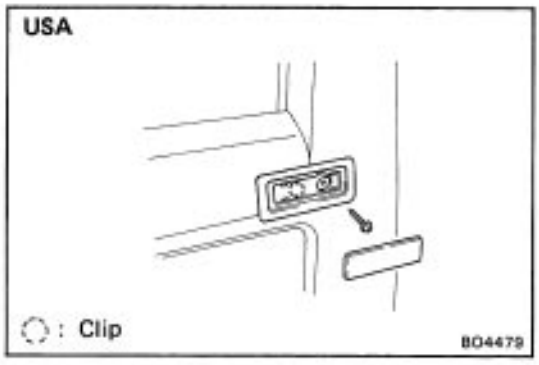

REMOVAL OF QUARTER window GLASS

1. REMOVE REAR SEAT BACK AND CUSHION

(See page BO–93)

2. REMOVE SCUFF PLATE

3. (USA)

REMOVE BELT HOLE COVER

Using a screwdriver, pry out the cover.

HINT: Tape the screwdriver tip before use.

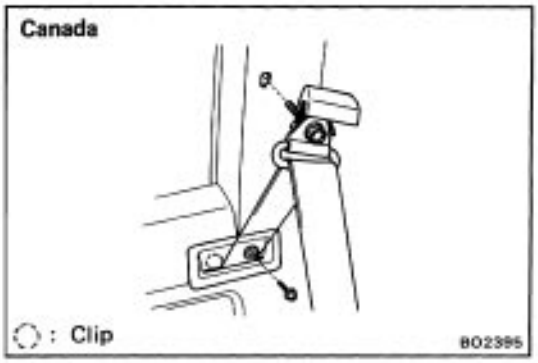

4. (USA)

REMOVE REAR SEAT SHOULDER BELT ANCHOR BOLT AND BELT HOLE UPPER COVER

5. (Canada)

REMOVE FRONT AND REAR SEAT SHOULDER BELT ANCHOR BOLT AND BELT HOLE UPPER COVER

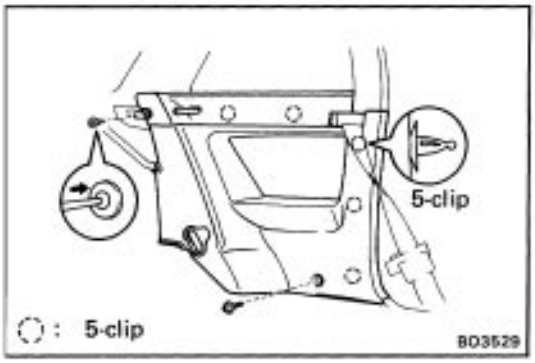

6. REMOVE QUARTER TRIM

(a) (w/ Separate type rear seat)
Remove two bolts and the side hinge.
(b) Remove the screw and the clip.
(c) Pry loose five clips and the trim.

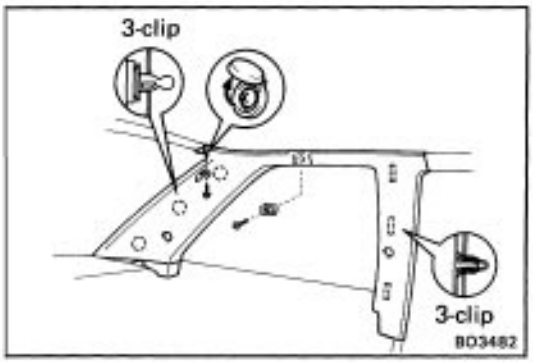

7. REMOVE ROOF SIDE TRIM GARNISH

(a) Remove the screw and the hook.
(b) Using a screwdriver, pry up the screw cap and remove the screw.
HINT: Tape the screwdriver tip before use.
(c) Pry loose six clips and the garnish.

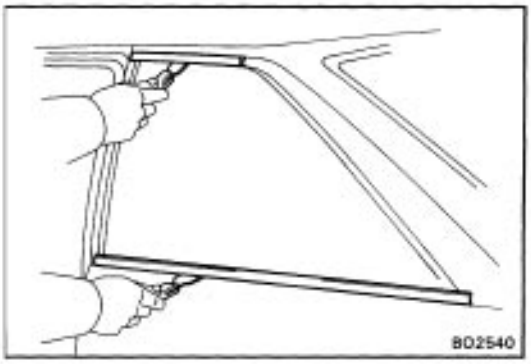

8. REMOVE QUARTER window MOULDING

(a) Using a scraper, pry loose the upper and lower moulding.
HINT: Tape the scraper tip before use.
(b) Using a scraper, pry loose the front moulding.

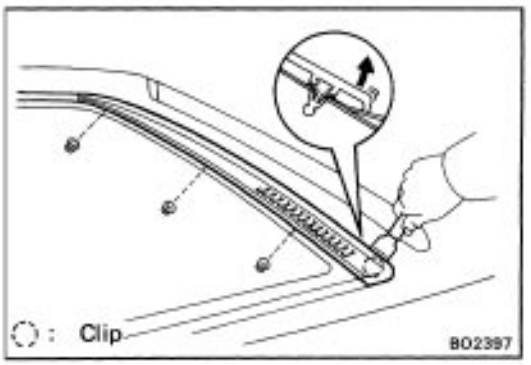

9. REMOVE QUARTER VENTILATION LOUVER

(a) Remove three nuts.
(b) Using a scraper, pry loose the clip to remove the quarter ventilation louver.
HINT: Tape the scraper tip before use.

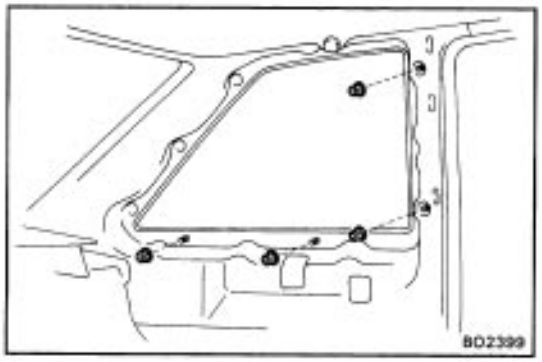

10. REMOVE QUARTER window GLASS

(a) Remove four nuts.

(b) Using a knife, cut loose the sealer to remove the glass.

HINT: Do not damage the body.

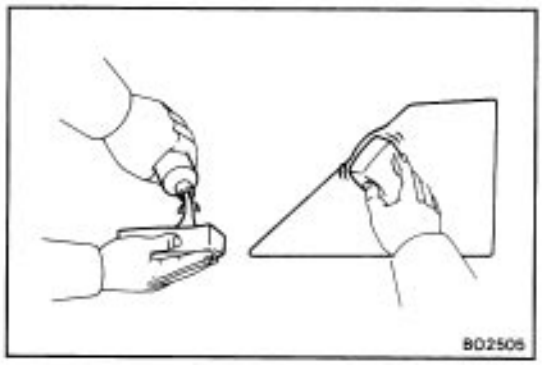

INSTALLATION OF QUARTER window GLASS

(See page BO–52)

1. CLEAN BODY AND GLASS

wipe off any adhesive left on the body and glass with cleaner.

2. COAT CONTACT SURFACE OF GLASS with PRIMER

(a) Using a sponge, apply the primer around the entire ceramic application area.

HINT: Apply primer evenly and to the ceramic application area only.

(b) Let the primer coating dry for 10 minutes.

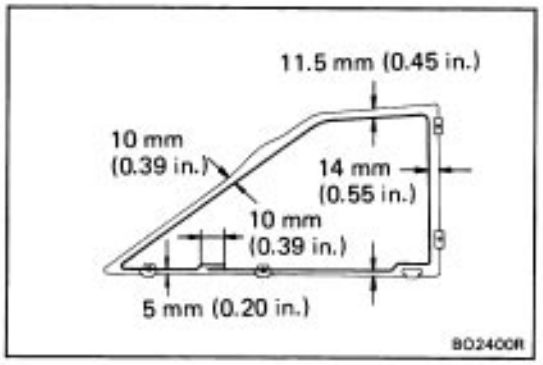

3. APPLY GLASS SEAL TO GLASS

Install the seal to the glass.

HINT: Overlap the seal approx. 10 mm (0.39 in.) at the bottom of the glass.

4. INSTALL QUARTER window GLASS

Install four nuts.

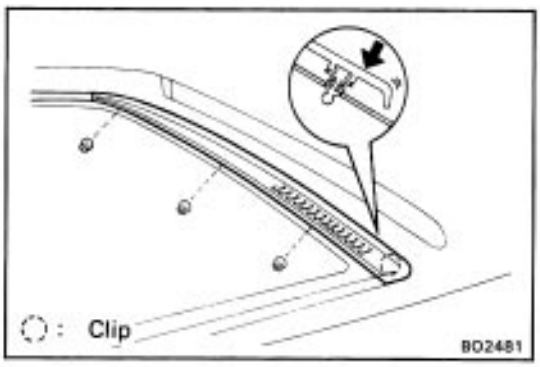

5. INSTALL QUARTER VENTILATION LOUVER

(a) Place the clip onto the panel and tap the ventilation louver by hand.

(b) Install three nuts.

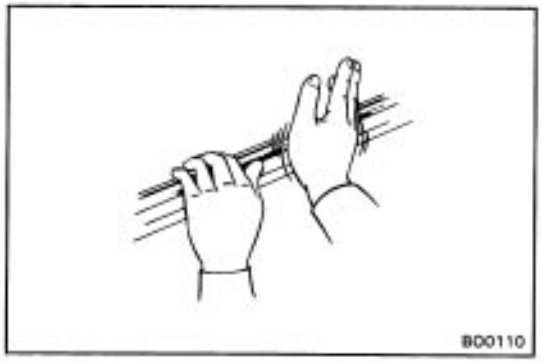

6. INSTALL QUARTER window MOULDING

(a) Place the front moulding onto the clip and tap it by hand.

(b) Install the upper and lower moulding in the same manner.

7. INSTALL FOLLOWING PARTS:

(a) Roof side trim garnish

(b) Quarter trim

(c) Side hinge

Torque: 80 kg–cm (69 in.–lb, 7.8 N–m)

(d) Rear seat shoulder belt anchor bolt

Torque: 440 kg–cm (32 ft–lb, 43 N–m)

(e) (Canada)

Front seat shoulder belt anchor bolt and belt hole upper cover

Torque: 440 kg–cm (32 ft–lb, 43 N–m)

(f) (USA)

Belt hole cover and belt hole upper cover

(g) Scuff plate

(h) Rear seat back and cushion

8. CHECK FOR LEAKS

FWD Wagon

COMPONENTS

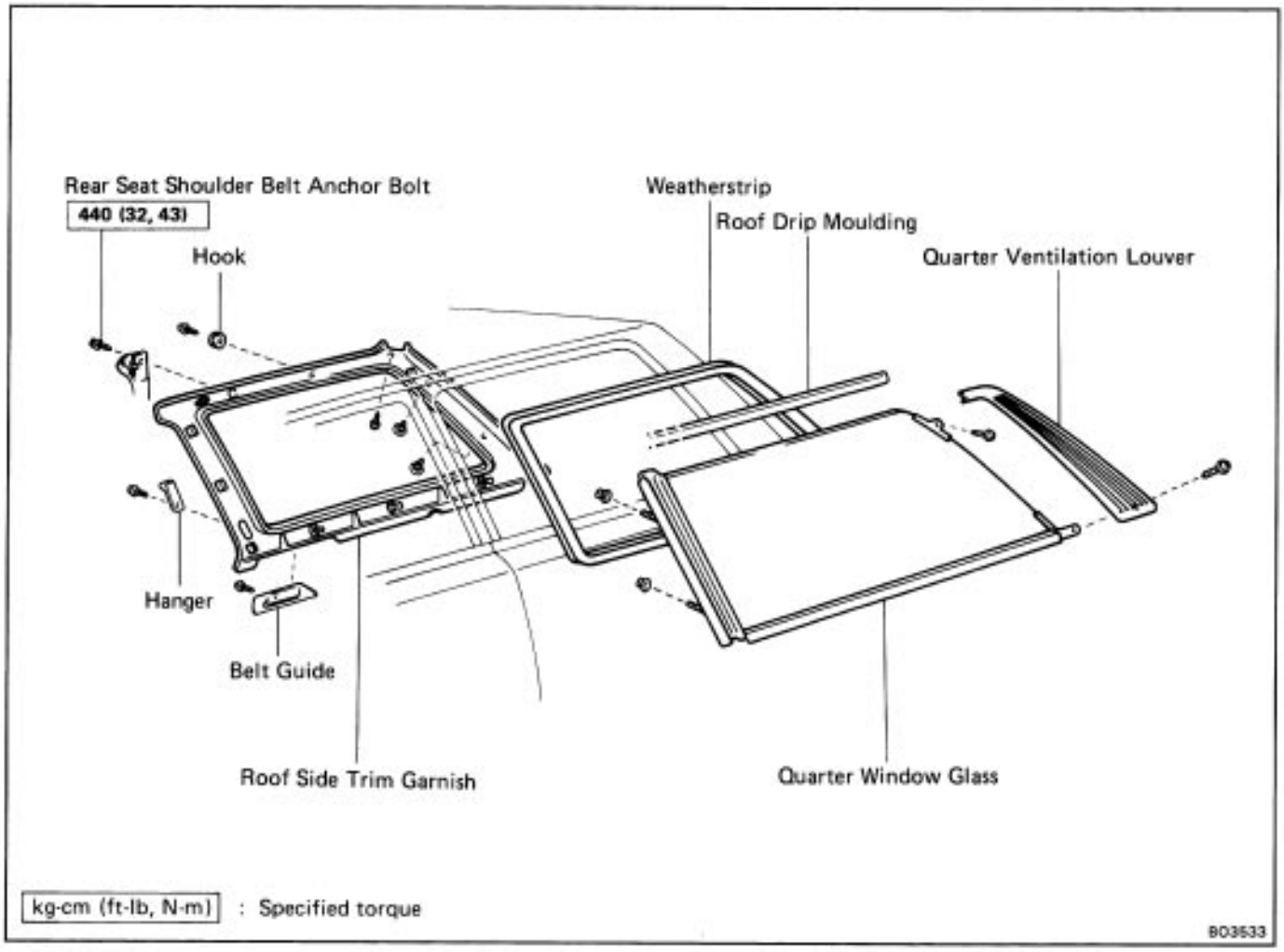

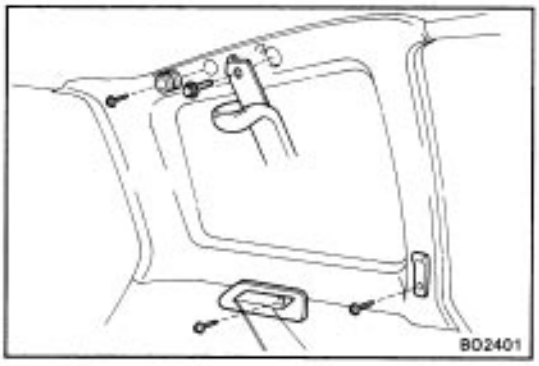

REMOVE QUARTER WINDOW GLASS

1. REMOVE REAR SEAT SHOULDER BELT ANCHOR BOLT

2. REMOVE HANGER AND BELT GUIDE

(a) Remove the screw and pull out hanger.

(b) Remove the screw and belt guide.

3. REMOVE HOOK

Remove the screw and hook.

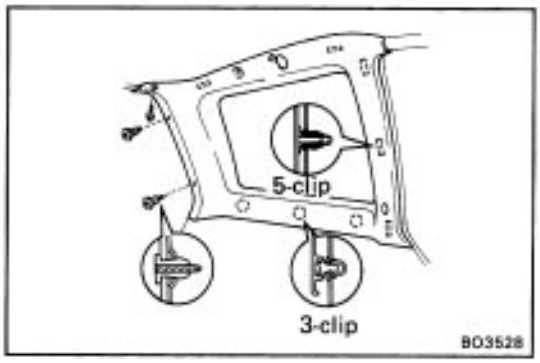

4. REMOVE ROOF SIDE TRIM GARNISH

(a) Remove the screw and two clips.

(b) Using a screwdriver, pry loose eight clips and remove the garnish.

HINT: Tape the screwdriver tip before use.

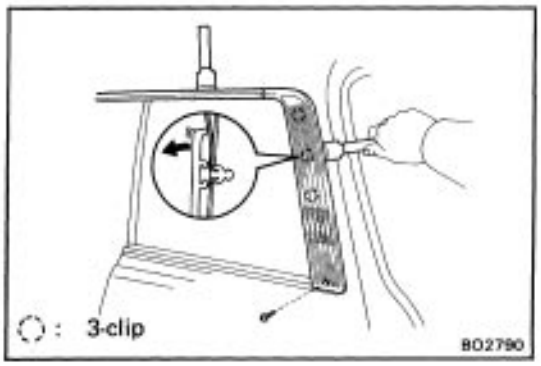

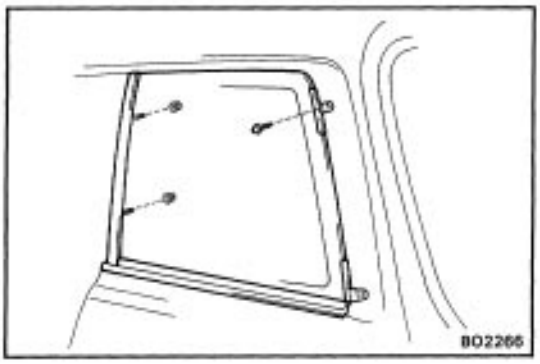

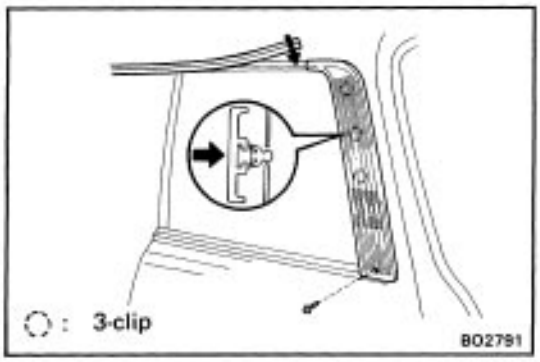

5. REMOVE ROOF DRIP MOULDING

Using a scraper, pry loose the moulding from the end of it.

HINT: Tape the scraper tip before use.

6. REMOVE QUARTER VENTILATION LOUVER

(a) Remove the screw.

(b) Using a scraper, pry loose three clips and remove the quarter ventilation louver.

HINT: Tape the scraper tip before use.

7. REMOVE QUARTER window GLASS with FRONT MOULDING

(a) Remove two nuts.

(b) Remove the screw and quarter window glass with the front moulding.

8. REMOVE QUARTER window WEATHERSTRIP BY HAND

INSTALLATION OF QUARTER window GLASS

(See page BO–56)

1. INSTALL QUARTER window WEATHERSTRIP BY HAND

2. INSTALL QUARTER window GLASS with FRONT MOULDING

(a) Install the glass to the body.

(b) Install the screw and two nuts.

3. INSTALL FOLLOWING PARTS:

(a) Quarter ventilation louver

(b) Roof drip moulding

(e) Roof side trim garnish

(d) Hook

(e) Belt guide

(f) Hanger

(g) Rear seat shoulder belt anchor bolt

Torque: 440 kg–cm (32 ft–lb, 43 N–m)

4. CHECK FOR LEAKS

All–Track 4WD Wagon

PREPARE ITEMS LISTED

(See page BO–52)

COMPONENTS

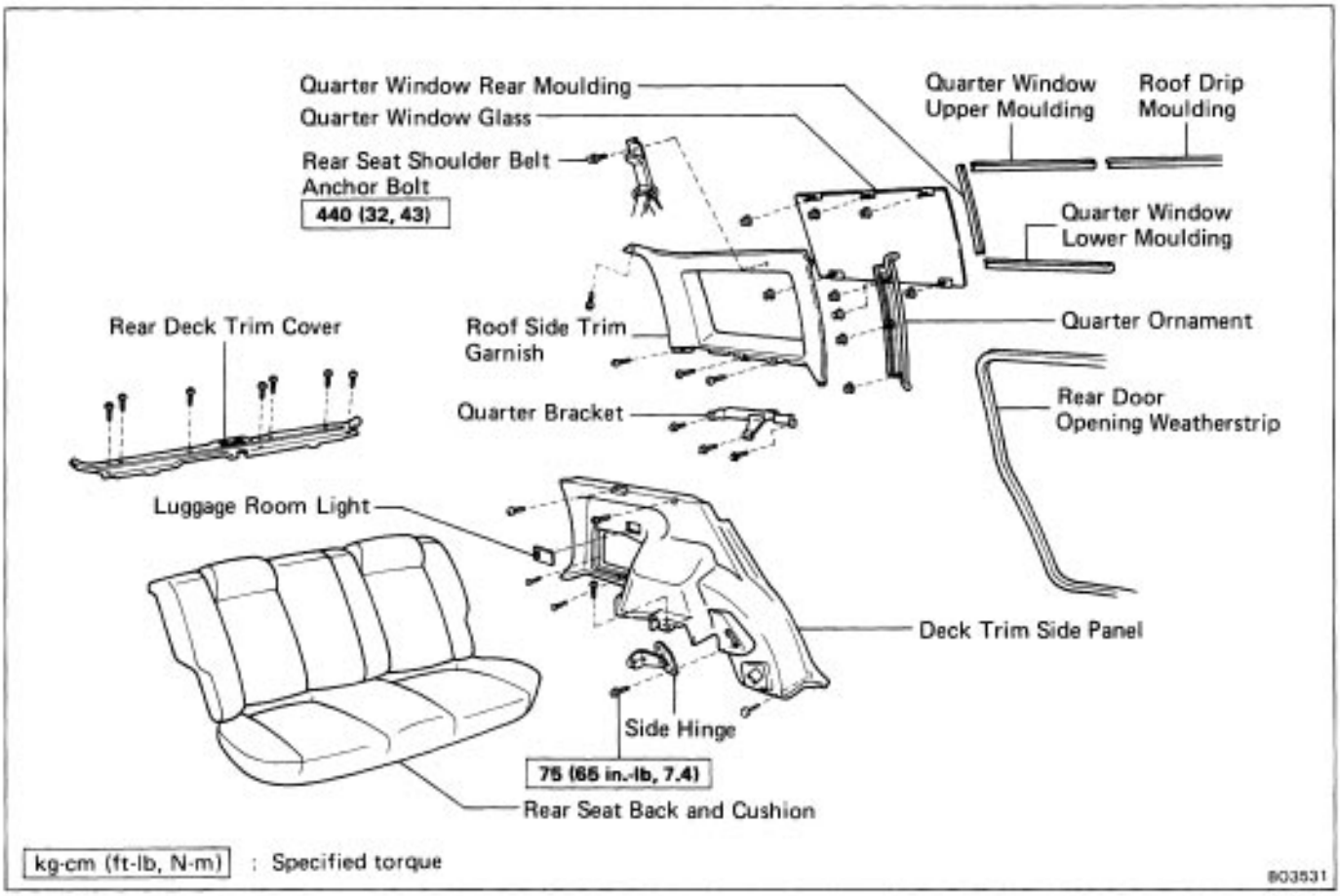

REMOVAL OF QUARTER WINDOW GLASS

1. REMOVE FOLLOWING PARTS:

- Rear door opening weatherstrip
- Rear seat back and cushion
  (See page BO–94)

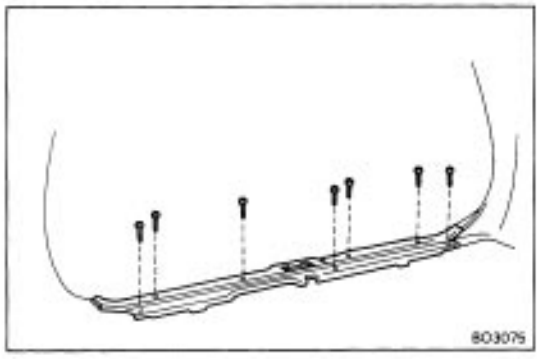

2. REMOVE REAR DECK TRIM COVER

Remove seven screws and the cover

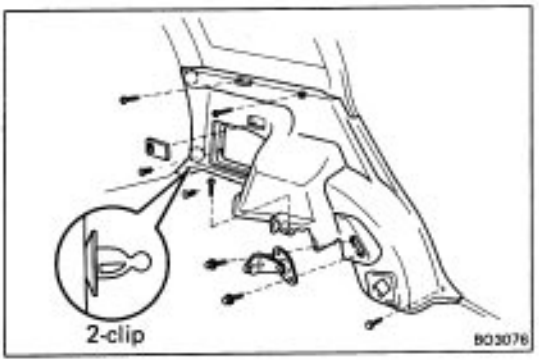

3. REMOVE DECK TRIM SIDE PANEL

(a) Remove two bolts and the side hinge.
(b) Disconnect the connector and remove the luggage room light.
(c) Remove three clips and three screws.
(d) Using a screwdriver, pry loose two clips and remove the side panel.

HINT: Tape the screwdriver tip before use.

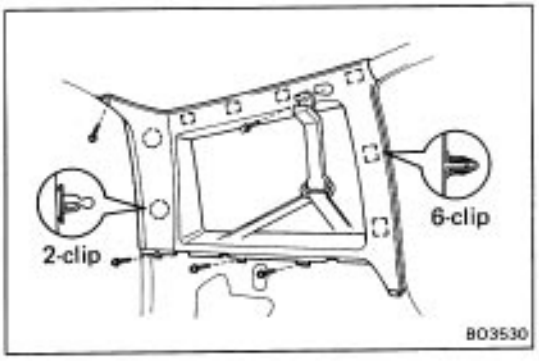

4. REMOVE REAR SEAT SHOULDER BELT ANCHOR BOLT

5. REMOVE ROOF SIDE TRIM GARNISH

(a) Remove three bolts and the quarter bracket.
(b) Remove four screws.
(c) Using a screwdriver, pry loose eight clips and remove the garnish.

HINT: Tape the screwdriver tip before use.

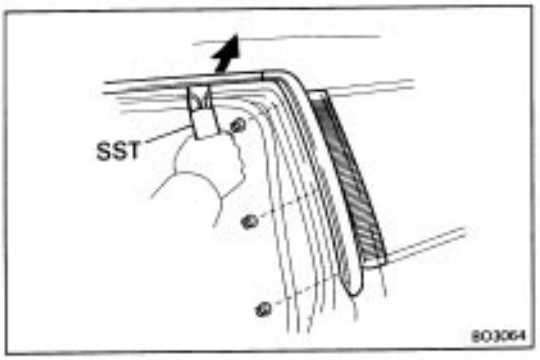

6. REMOVE QUARTER ORNAMENT

(a) Remove three nuts.
(b) Using SST, pry loose the roof drip moulding.
SST 09806–30010
(c) Remove the ornament.

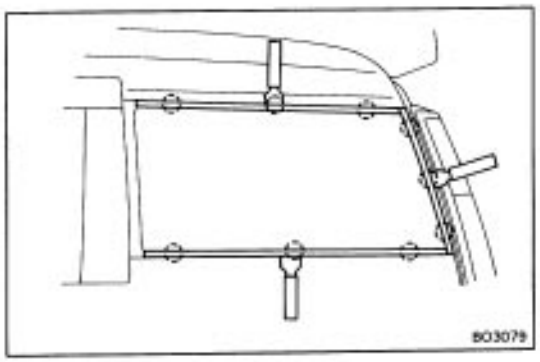

7. REMOVE QUARTER window MOULDINGS

(a) Using a scraper, pry out the rear moulding.

HINT: Tape the scraper tip before use.

(b) Remove the upper and lower mouldings in the same manner.

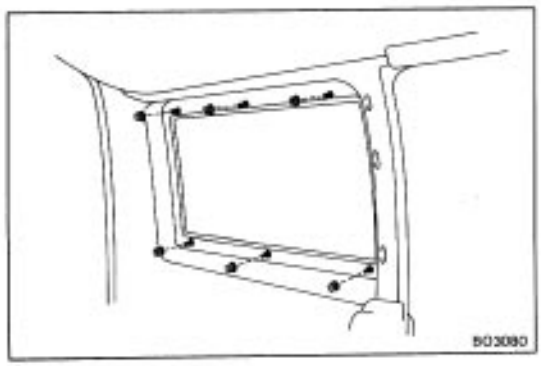

8. REMOVE QUARTER window GLASS

(a) Remove six nuts.
(b) Using a knife, cut loose a sealer between the glass and the body panel.

HINT: Do not damage the body and the glass.

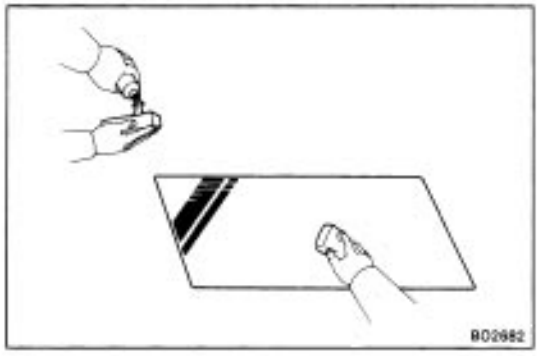

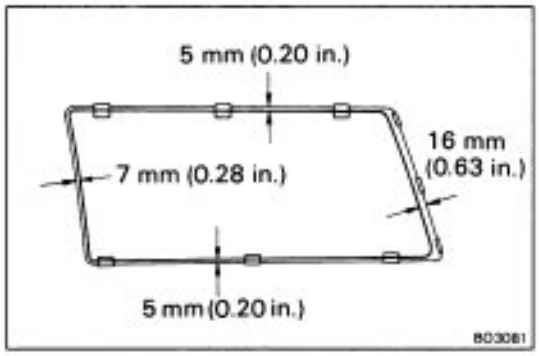

INSTALLATION OF QUARTER WIDOW GLASS

(See page BO–58)

1. CLEAN BODY AND GLASS

Wipe off any adhesive left on the body and glass with cleaner.

2. COAT CONTACT SURFACE OF GLASS with PRIMER

(a) Using a sponge, apply the primer around the entire ceramic application area.

HINT: Apply primer evenly and to the ceramic application area only.

(b) Let the primer coating dry for 10 minutes.

3. APPLY SEAL TO GLASS

Install the seal to the glass.

4. INSTALL QUARTER window GLASS

(a) Place the bolts of retainers into the body holes.

(b) Tap the glass by hand.

(c) Install six nuts.

5. CHECK FOR LEAKS

6. INSTALL QUARTER window MOULDINGS

(a) Place the upper and lower mouldings to the retainers and tap the mouldings by hand.

(b) Install the rear moulding in the same manner.

7. INSTALL FOLLOWING PARTS:

- Quarter Ornament
- Roof side trim garnish
- Rear seat shoulder belt anchor bolt

Torque: 440 kg–cm (32 ft–lb, 43 N–m)

- Deck trim side panel
- Side hinge

Torque: 75 kg–cm (65 in.–lb, 7.4 N–m)

- Rear deck trim cover
- Rear seat and cushion
- Rear door opening weatherstrip

REAR WINDOW GLASS

PREPARE ITEMS LISTED

(See page BO–47)

COMPONENTS

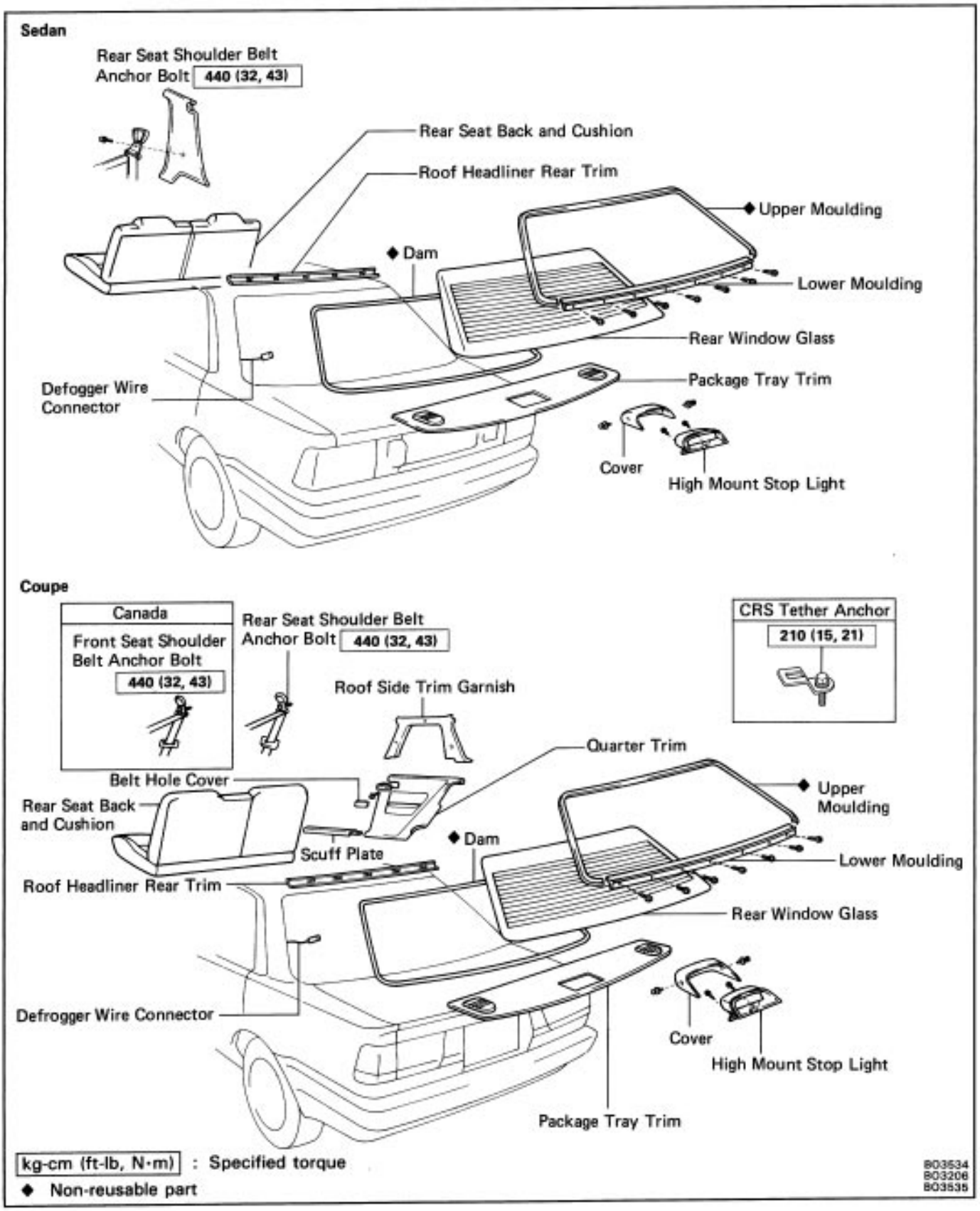

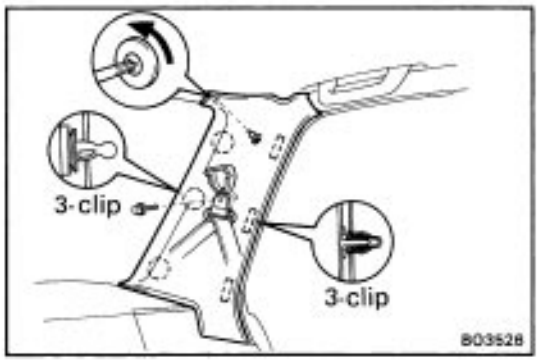

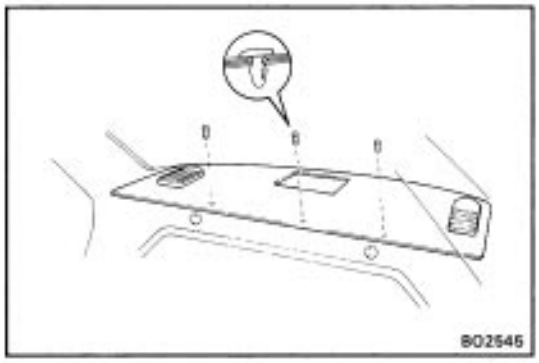

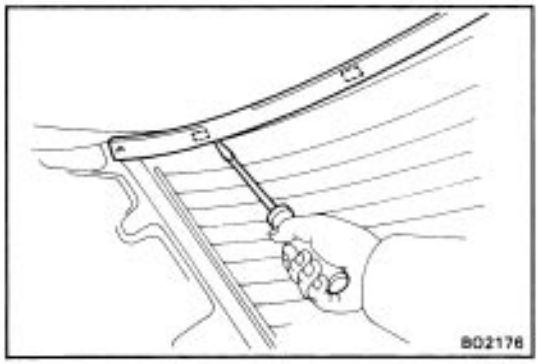

REMOVAL OF REAR window GLASS

1. DISCONNECT DEFOGGER w/RE CONNECTORS

2. REMOVE REAR SEAT BACK AND CUSHION

(See pages BO–92 and 93)

3–1. (Sedan)

REMOVE ROOF SIDE TRIM GARNISH

(a) Remove rear seat shoulder belt anchor bolt.

(b) Remove the clip.

(e) Using a screwdriver, pry loose six clips to remove it.

HINT: Tape the screwdriver tip before use.

3–2. (Coupe)

REMOVE FOLLOWING PARTS:

(See pages BO–52 and 53)

(a) Scuff plate

(b) (Canada)

Front and rear seat shoulder belt anchor bolt and belt hole upper cover

(c) (USA)

Rear seat shoulder belt anchor bolt, belt hole upper cover and belt hole cover

(d) Quarter trim

(e) Roof side trim garnish

4. REMOVE HIGH MOUNT STOP LIGHT AND COVER

5. REMOVE PACKAGE TRAY TRIM

(a) Remove the bolt and CRS tether ancher.

(b) Pry out three clips and pull it forward to remove it.

6. REMOVE ROOF HEADLINER REAR TRIM

Using a screwdriver, pry out five clips to remove it.

HINT: Tape the screwdriver tip before use.

7. REMOVE REAR window MOULDING

(See page BO–44)

8. REMOVE REAR window GLASS

HINT: Remove the rear window glass in the same manner as the windshield glass. (See page BO–49)

PREPARATION FOR INSTALLATION

(See steps 1 to 4 on pages BO–49 and 50)

INSTALLATION OF REAR WINDOW GLASS

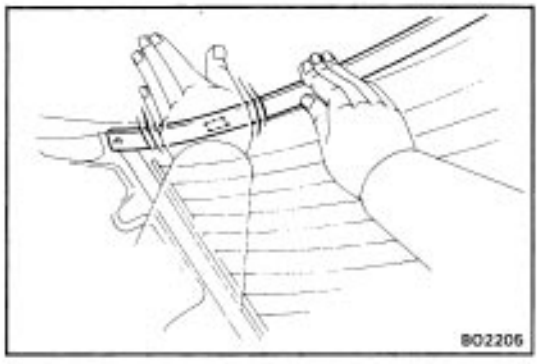

1. INSTALL REAR window GLASS

(See steps 1 to 8 on pages BO–50 and 51)

2. INSTALL REAR window MOULDING

(See page BO–44)

3. INSTALL FOLLOWING PARTS:

(a) Roof headliner rear trim

(b) Packing tray trim

(c) CRS tether anchor

Torque: 210 kg–cm (15 ft–lb, 21 N–m)

(d) High mount stop light and cover

4–1. (Sedan)

INSTALL ROOF SIDE TRIM GARNISH

(a) Tap the garnish by hand and install the clip.

(b) Install the rear seat shoulder belt anchor bolt and belt guide.

Torque: 440 kg–cm (32 ft–lb, 43 N–m)

4–2. (Coupe)

INSTALL FOLLOWING PARTS:

(a) Roof side trim garnish

(b) Quarter trim

(c) Rear seat shoulder belt anchor bolt and belt guide

Torque: 440 kg–cm (32 ft–lb, 43 N–m)

(d) (Canada)

Front seat shoulder belt anchor bolt and belt hole upper cover

Torque: 440 kg–cm (32 ft–lb, 43 N–m)

(e) (USA)

Belt hole upper cover and belt hole cover

(f) Scuff plate

(g) Rear seat back and cushion

5. CONNECT DEFOGGER WIRE CONNECTORS

BACK DOOR GLASS

FWD Wagon

COMPONENTS

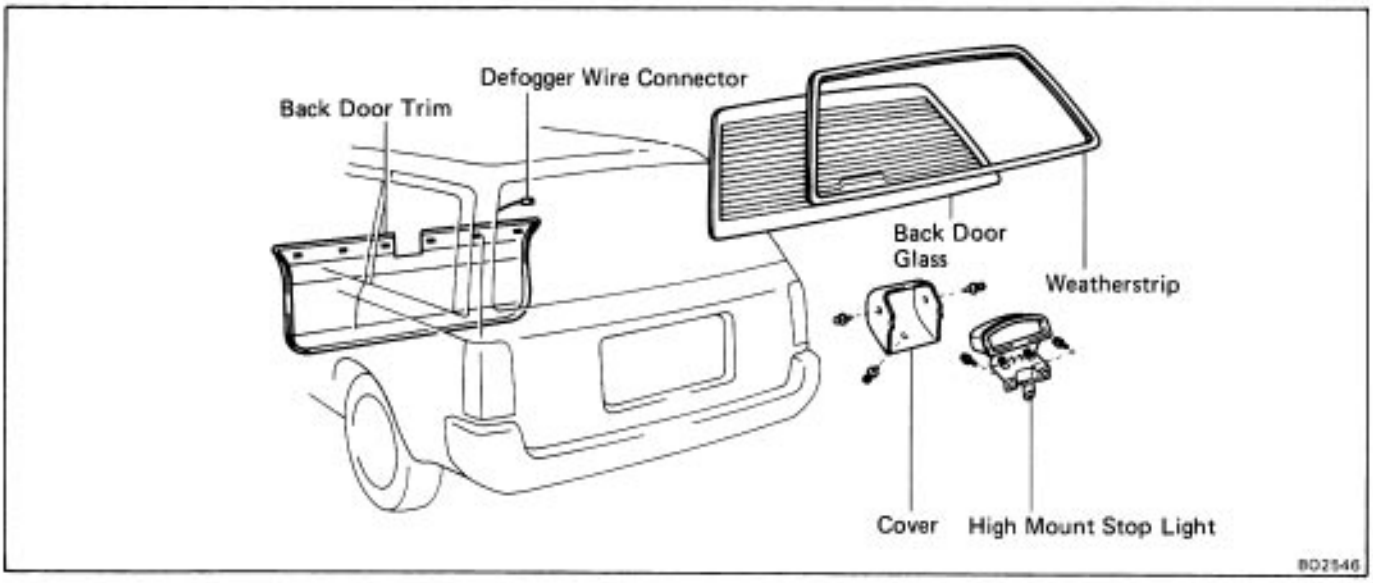

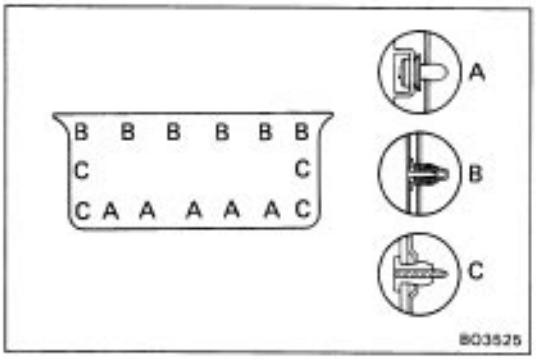

REMOVAL OF BACK DOOR GLASS

1. REMOVE REAR WIPER ARM
2. DISCONNECT DEFOGGER w/RE CONNECTORS
3. REMOVE HIGH MOUNT STOP LIGHT AND COVER
4. REMOVE BACK DOOR TRIM

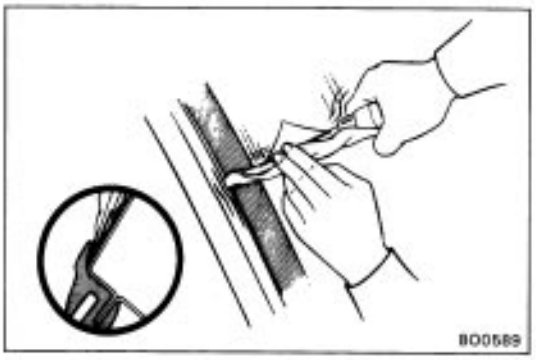

5. REMOVE GLASS

(a) Working from outside the vehicle with a screwdriver, loosen the weatherstrip lip from the body.

HINT: Apply tape or cloth to the screwdriver before use.

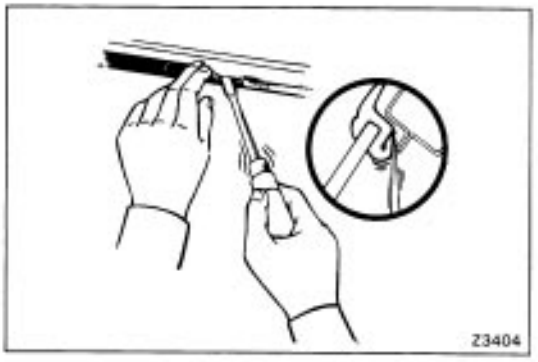

(b) Force the weatherstrip lip from the interior to the outside body flange. Pull the glass outwards and remove it with the weatherstrip.

INSTALLATION OF BACK DOOR GLASS

(See page BO–64)

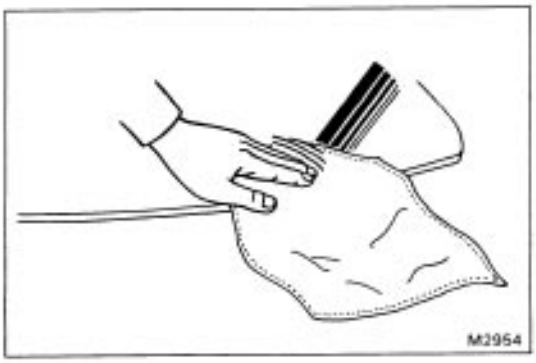

1. CLEAN BODY AND GLASS

Using cleaner, clean the weatherstrip contacting surface of the body and glass.

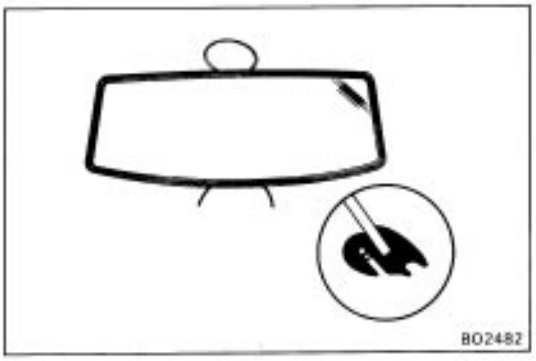

2. INSTALL WEATHERSTRIP IN GLASS

(a) Attach the weatherstrip to the glass.

NOTICE: If the weatherstrip has hardened, it may develop leaks. Use a new one if possible.

(b) Apply a working cord along the weatherstrip groove as shown.

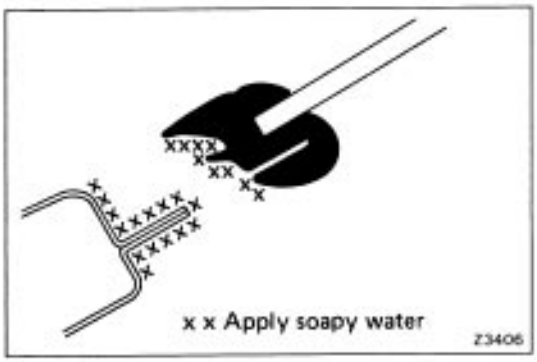

3. INSTALL GLASS

(a) Apply soapy water to the contact face of the weatherstrip lip and to the body flange.

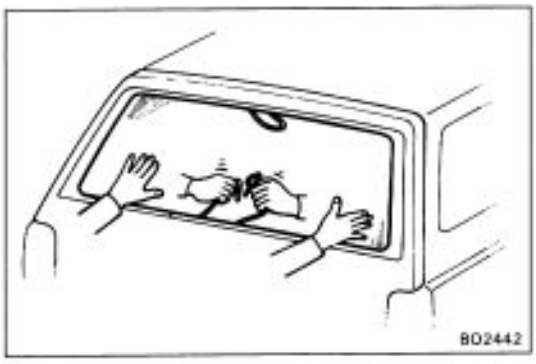

HINT: Begin installation from the lower center of the glass.

(b) Hold the glass in position on the body.

(c) Install the glass by pulling the string from the interior, while pushing on the outside of the weatherstrip with your open hand.

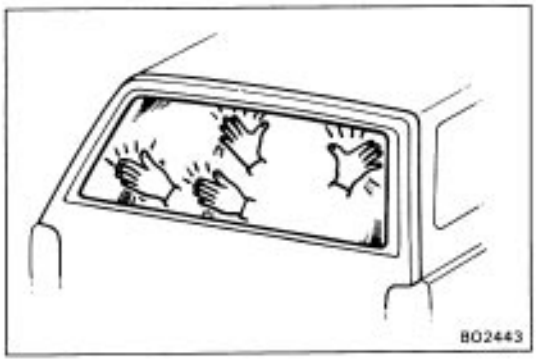

(d) To snug the glass in place, tap from the outside with your open hand.

4. CHECK FOR LEAKS

5. INSTALL BACK DOOR TRIM

6. INSTALL HIGH MOUNT STOP LIGHT AND COVER

7. CONNECT DEFOGGER w/RE CONNECTORS

8. INSTALL REAR w/PER ARM

All–Track 4WD Wagon

PREPARE ITEMS LISTED

(See page BO–47)

COMPONENTS

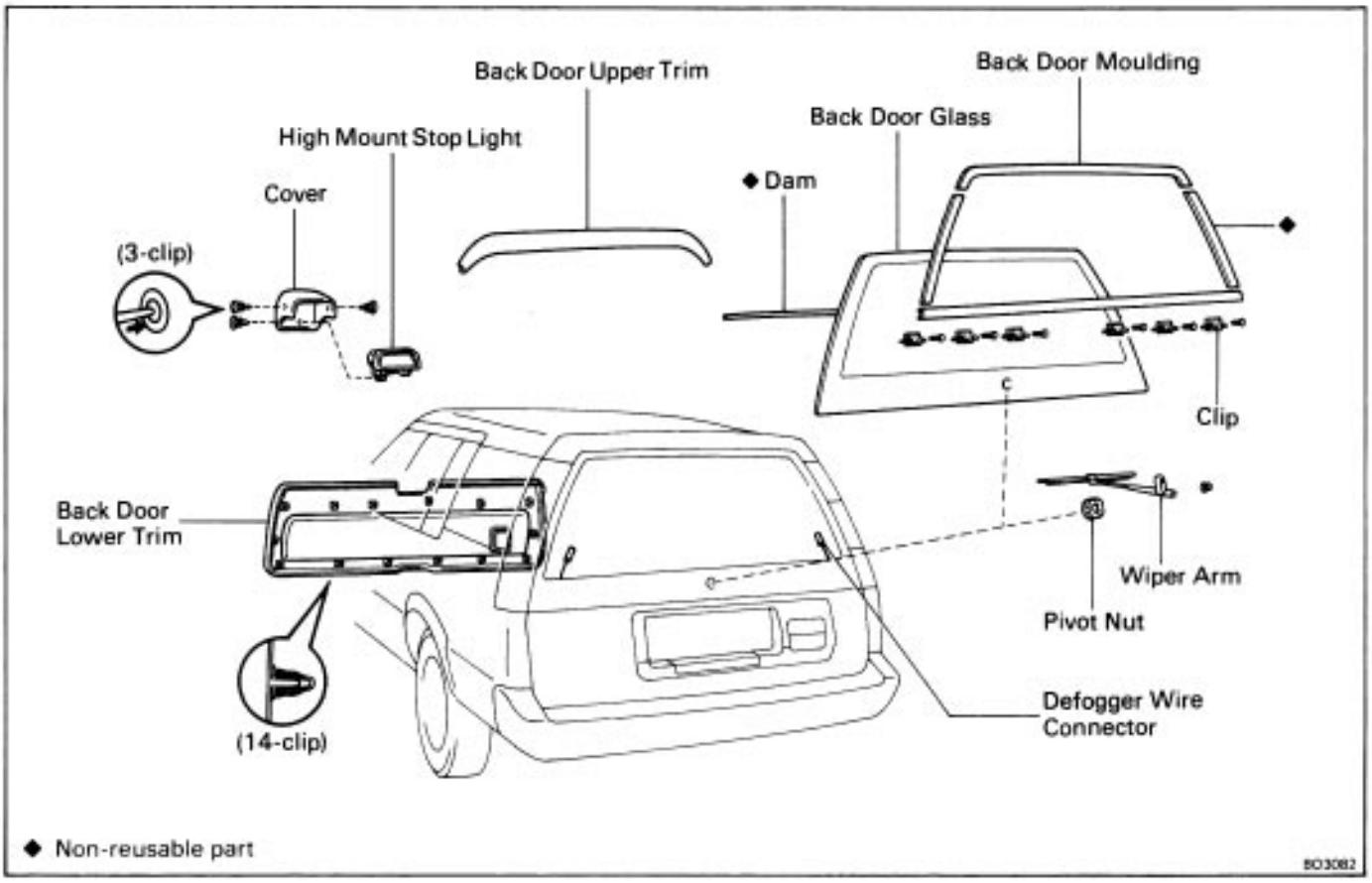

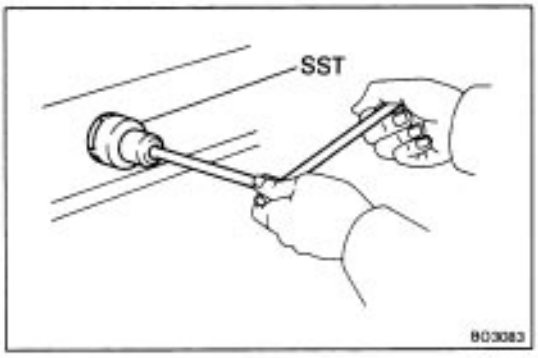

REMOVAL OF BACK DOOR GLASS

1. (w/ REAR WIPER)

REMOVE REAR WIPER ARM

(a) Remove the nut and the w/per arm.

(b) Using SST, remove the pivot nut.

SST 09814–22010

2. DISCONNECT DEFOGGER w/RE CONNECTORS

3. REMOVE HIGH MOUNT STOP LIGHT AND COVER

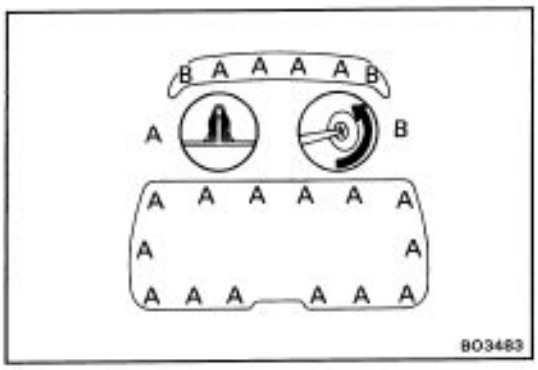

4. REMOVE BACK DOOR TRIMS

(a) Remove six clips and the upper trim.

(b) Remove fourteen clips and the lower trim.

5. REMOVE BACK DOOR MOULDINGS

(See pages BO–45 to 46)

6. REMOVE BACK DOOR MOULDING CLIPS

Remove six screws and six clips.

7. REMOVE GLASS

Remove the back door glass in the same manner as the windshield glass. (See step 5 on page BO–49)

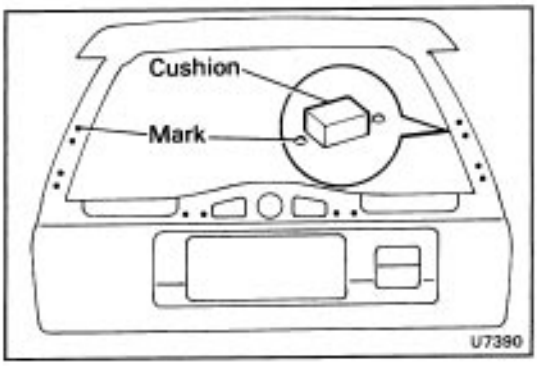

PREPARATION FOR INSTALLATION

(See steps 1 to 4 on pages BO–49 and 50)

INSTALLATION OF BACK DOOR GLASS

1. INSTALL BACK DOOR STOPPER CUSHION

(a) Remove the backing paper from the cushion.

(b) Install six cushions at the position as shown in the illustration.

2. INSTALL BACK DOOR GLASS

(See steps 1 to 8 on pages BO–50 and 51)

3. INSTALL BACK DOOR MOULDING CLIPS

4. INSTALL BACK DOOR MOULDINGS

(See page BO–46)

5. INSTALL BACK DOOR TRIMS

6. INSTALL HIGH MOUNT STOP LIGHT AND COVER

7. CONNECT DEFOGGER w/RE CONNECTOR

8. (w/ REAR WIPER)

INSTALL REAR w/PER ARM

(a) Using SST, install the pivot nut.

SST 09814–22010

Install the wiper arm with the nut.

SUN ROOF

COMPONENTS

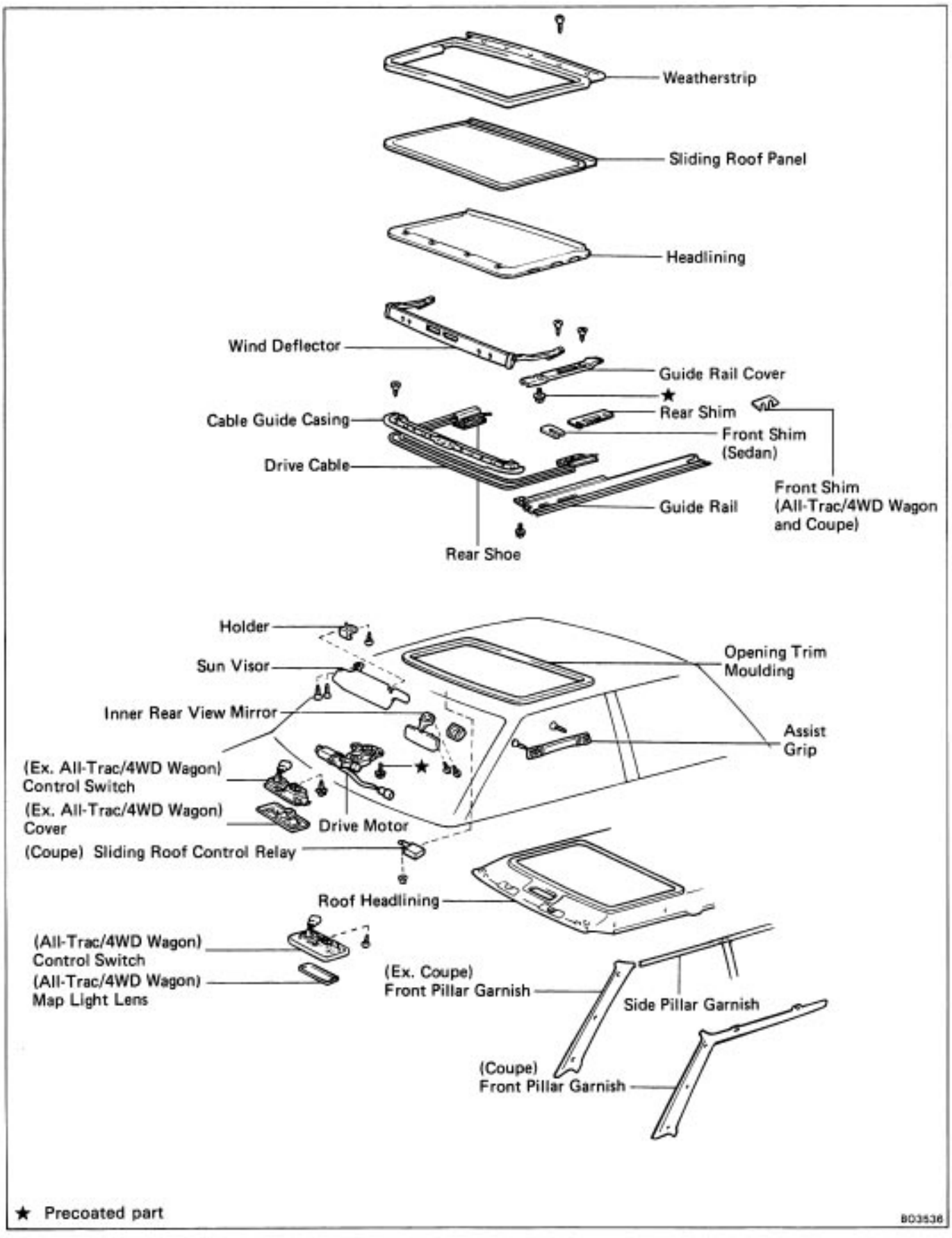

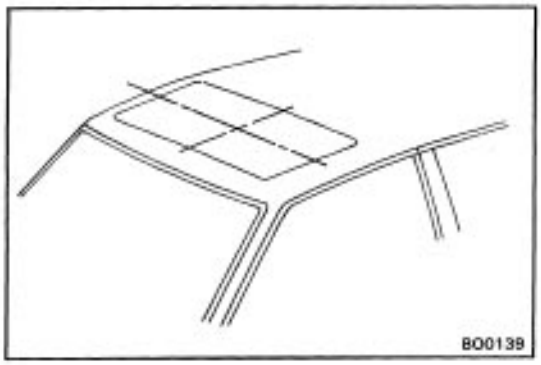

ON–VEHICLE INSPECTION

INSPECT SLIDING ROOF PANEL ALIGNMENT

(a) Check for abnormal noise or binding during operation.

(b) with the sun roof fully closed, check for water leakage.

(c) Check for a difference in level between the sliding panel and roof panel.

± 1 (p+0.039 in

Level: 0 2 MM (0 +–0.079 n

If the sliding roof does not operate:

(a–1) (All–Track/4WD Wagon)

Remove the map light lens.

(a–2) (Ex. All–Track/4WD Wagon)

Remove the control switch cover.

(b) Remove the large screw inside.

NOTICE: Be careful not to lose the spring washer or shim.

(c) Manually operate the sun roof by inserting a special crank–shaped screwdriver into the hole and turning the drive shaft.

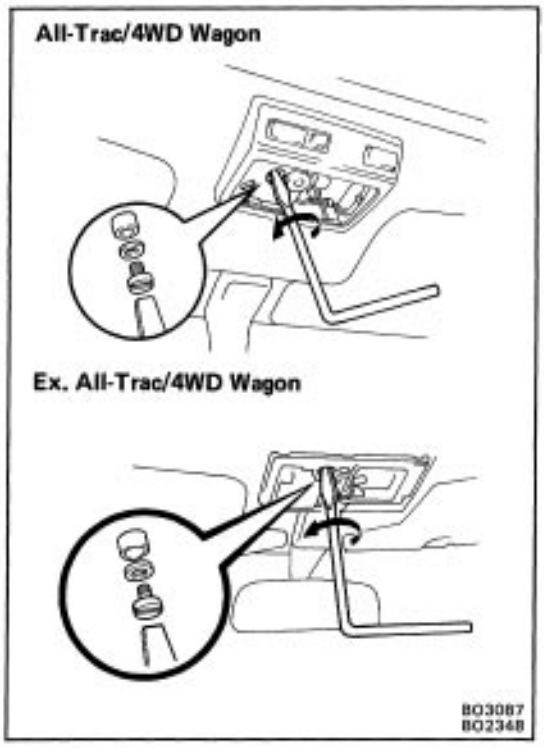

ADJUSTMENT OF SLIDING ROOF

1. REMOVE HEADLINING

(a) Open the sliding roof halfway.

(b) Using a screwdriver, disconnect the clips on the front part of the headlining.

HINT: Tape the screwdriver tip before use.

(c) Slide the headlining to the rear.

HINT: When checking adjustment, reattach the headlining before sliding the roof.

2. TO ADJUST LEVEL DIFFERENCE

Adjust by increasing or decreasing the number of shims between the shoe and sliding roof.

HINT: If the front of the sliding roof is high, even without a shoe shim, check to see if the front shoes are in contact with the stoppers.

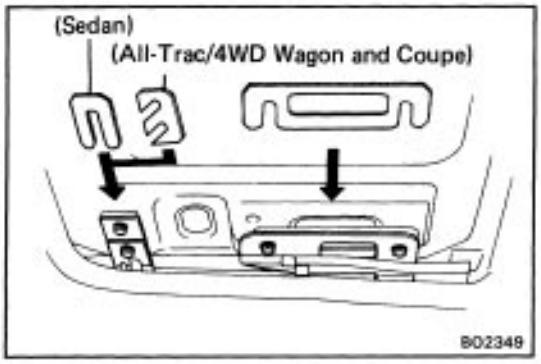

3. TO ADJUST FORWARD OR REARWARD

Adjust by loosening the sliding roof installation bolts, and move the sliding roof front shoe forward and rearward.

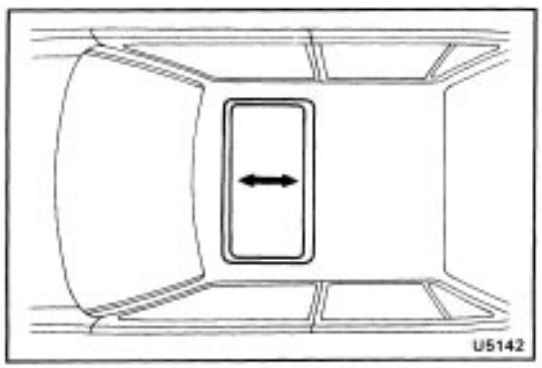



HINT: When the sliding roof is fully closed, confirm that the front shoes are in contact with the stopper.

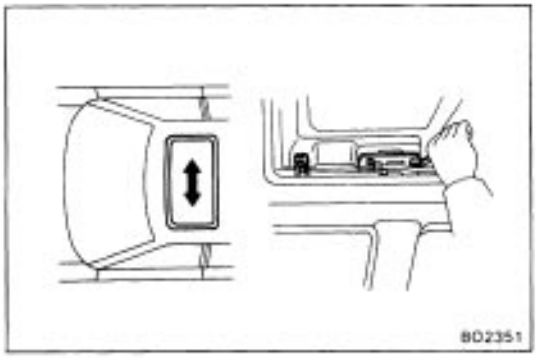

4. TO ADJUST RIGHT OR LEFT

Adjust by loosening the sliding roof rear shoe installation bolts, and move the sliding roof to the right and left.

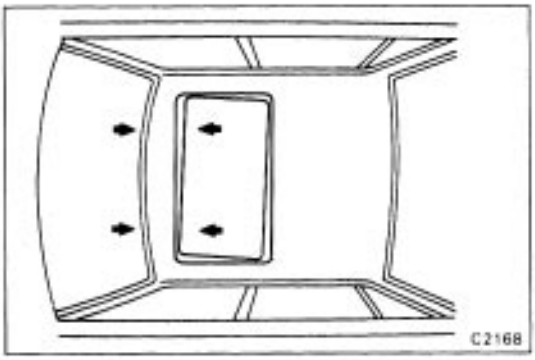

5. TO ADJUST CLEARANCE

(Difference in left and right clearance)

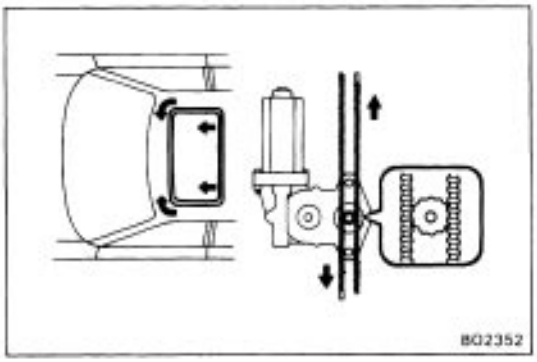

If the difference is about 2 mm (0.08 in.):

(a) Remove the drive motor and shift the cable one notch on the side with the larger clearance.

(b) Reinstall the motor.

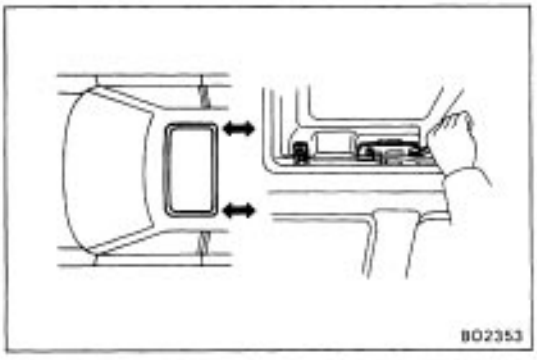

If the difference is about 1 mm (0.04 in.):

Loosen the sliding roof rear shoe installation bolts and readjust the sliding roof to the proper position.

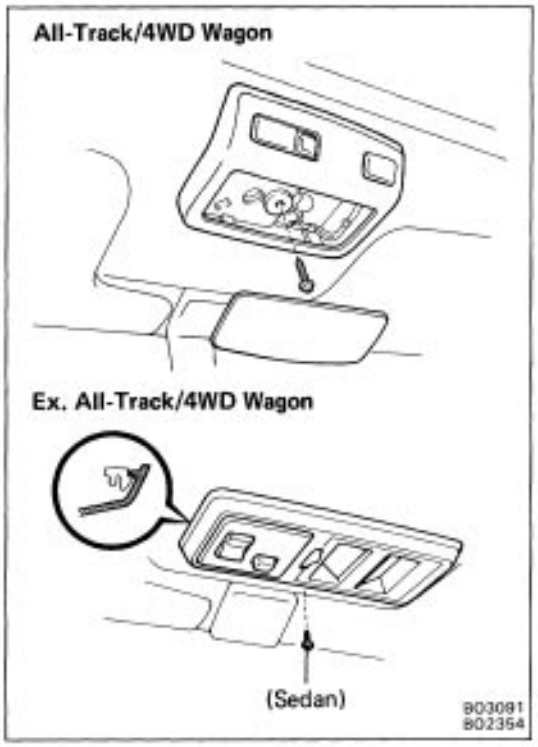

REMOVAL OF SUN ROOF

(See page BO–68)

1. DISCONNECT BATTERY CABLE FROM NEGATIVE TERMINAL

2. REMOVE CONTROL SWITCH

3. REMOVE FOLLOWING PARTS:

- Assist grip
- Front pillar garnish
- Inner rear view mirror
- Sun visors and holders
- Opening trim moulding
- Front side of roof headlining
- Side pillar garnish

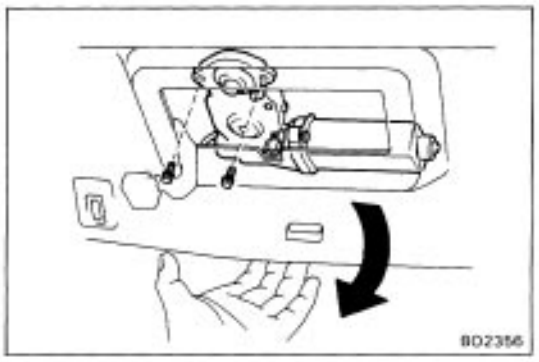

4. REMOVE DRIVE MOTOR

(a) Disconnect the drive motor connector.
(b) Push down the roof headlining.
(c) Remove two bolts and the drive motor.

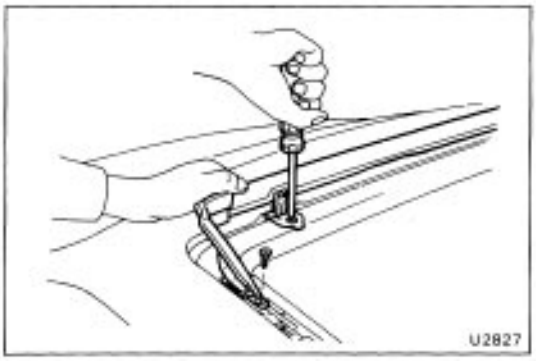

5. REMOVE WIND DEFLECTOR

Remove four screws and the wind deflector.

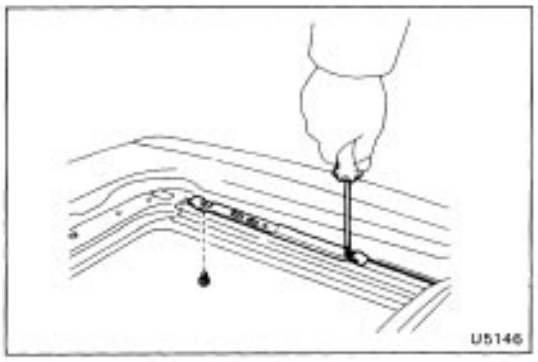

6. REMOVE GUIDE RAIL COVER

(a) Disconnect the front of roof headlining to make the clearance between the roof headlining and panel.
HINT: Do not damage the roof headlining
(b) Remove two bolts and the guide rail cover.

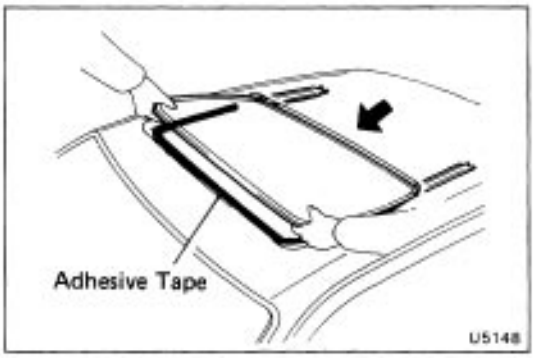

7. REMOVE SLIDING ROOF PANEL with GUIDE RAIL

(a) Apply adhesive tape to protect the body.

(b) Remove four sliding roof installation bolts and the sliding roof with guide rail.

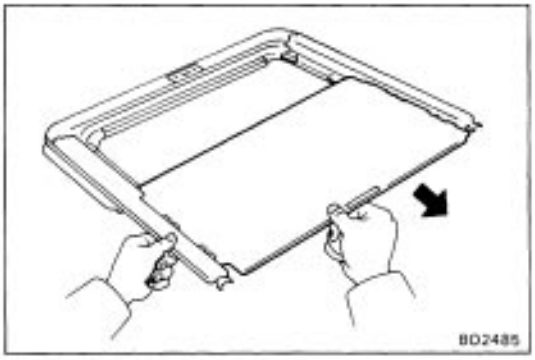

DISASSEMBLY OF SUN ROOF

(See page BO–68)

1. REMOVE HEADLINING

Pull the sliding roof headlining rearward to remove it.

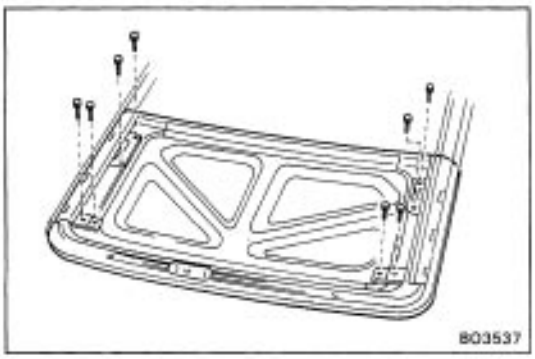

2. REMOVE SLIDING ROOF PANEL

Remove eight bolts and the sliding roof panel with the front and rear shims.

HINT: Note the number of shims in the front and rear shoes.

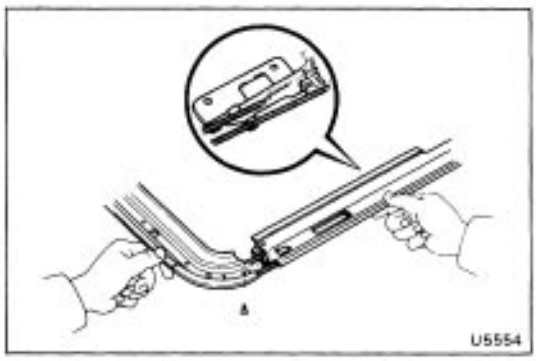

3. REMOVE CABLE GUIDE CASING FROM CASING ASSEMBLY

(a) Remove the screw.

(b) Pull the cable guide casing forward to remove.

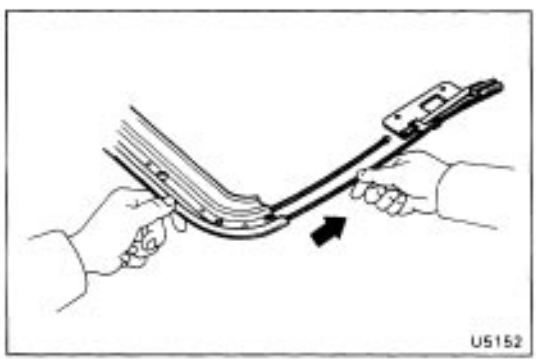

4. REMOVE CABLE FROM GUIDE RAIL

Pull the drive cable from the guide rail.

ASSEMBLY OF SUN ROOF

(See page BO–68)

1. APPLY MP GREASE TO DRIVE CABLE

2. PLACE DRIVE CABLES INTO GUIDE RAIL

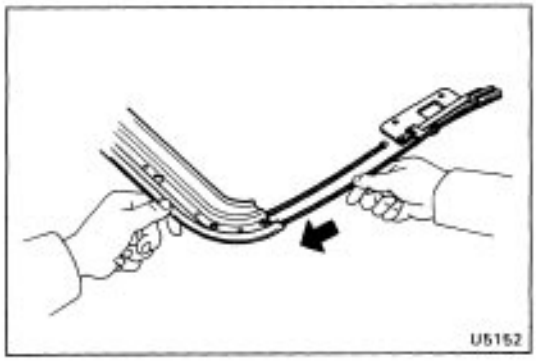

3. INSTALL CABLE GUIDE CASING AND GUIDE RAIL

(a) Insert the drive cable into the casing, and align it with the guide rail.

(b) Install the guide rail and guide casing with the screw.

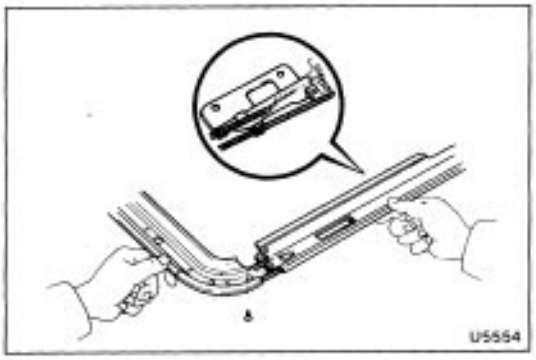

(c) Use butyl tape to cover the cut portion of the weatherstrip at the connection between the guide casing and guide rail.

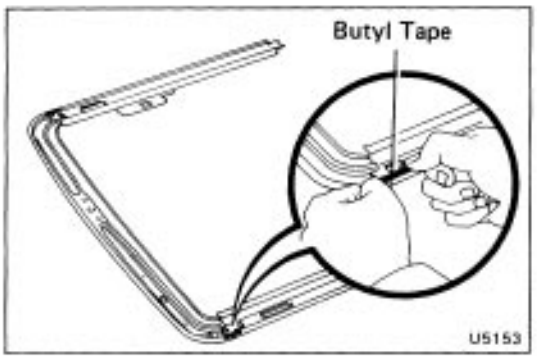

4. ASSEMBLE SLIDING ROOF PANEL

Install the sliding roof panel, front and rear shoes with eight bolts.

HINT: Install the same number of shims that were disassembled.

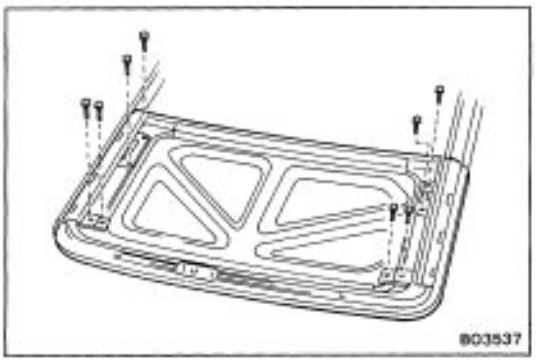

5. INSTALL HEADLINING

(a) Run the headlining through the guide rail.

(b) Do not clip the trim.

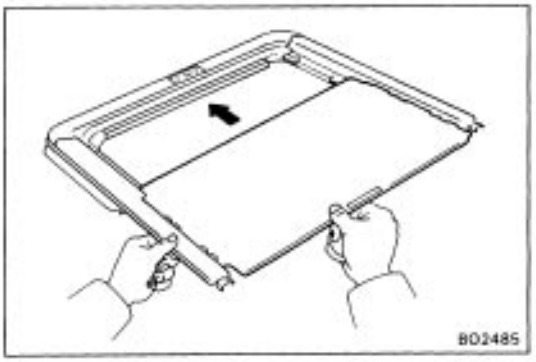

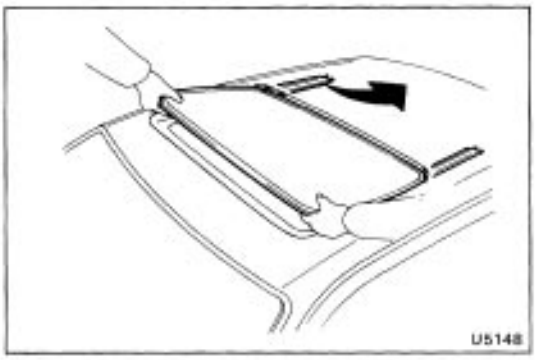

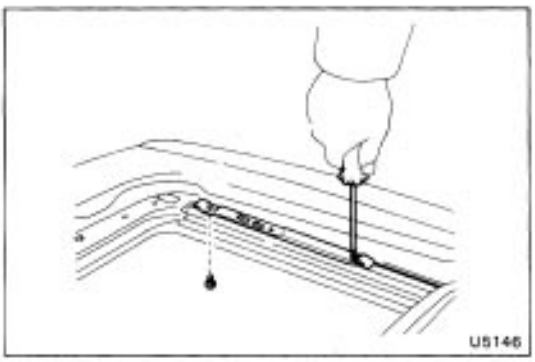

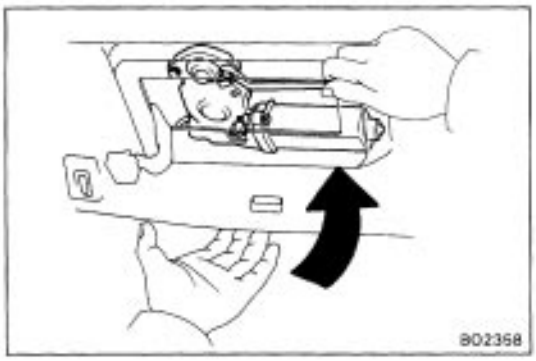

INSTALLATION OF SUN ROOF

(See page BO–68)

1. INSTALL SLIDING ROOF PANEL with GUIDE RAIL ONTO ROOF

(a) Place the sliding roof with the guide rail onto the roof.

(b) Tighten the guide rail and cover with four screws.

2. INSTALL GUIDE RAIL COVER

(a) Apply liquid sealer to 2 or 3 threads of the bolt end.

Sealant: Part No. 08833–00070, THREE BOND 1324, or equivalent

(b) Install the rail cover with two bolts.

HINT: Do not damage the roof headlining.

3. INSTALL WIND DEFLECTOR

Install the wind deflector with four screws.

4. INSTALL DRIVE MOTOR

(a) Close the sliding roof panel by hand so the clearance between the left and right sides of the sliding roof panel and roof panel are equal.

(b) Contact the front shoes with the stopper.

(c) Apply liquid sealer to 2 or 3 threads of the bolt end.

Sealant: Part No.08833–00070, THREE BOND 1324, or equivalent

(d) Install the drive motor with two bolts.

(e) Connect the drive motor connector.

5. INSTALL FOLLOWING PARTS:

- Front pillar garnish
- Inner rear view mirror
- Sun visors and holders
- Assist grip
- Opening trim moulding
- Front side of roof headlining
- Side pillar garnish

6. INSTALL CONTROL SWITCH

7. INSPECT AND ADJUST SLIDING ROOF

(See pages BO–69 to 70)

8. CONNECT BATTERY CABLE TO NEGATIVE TERMINAL

REMOVAL OF SLIDING ROOF PANEL

(See page BO–68)

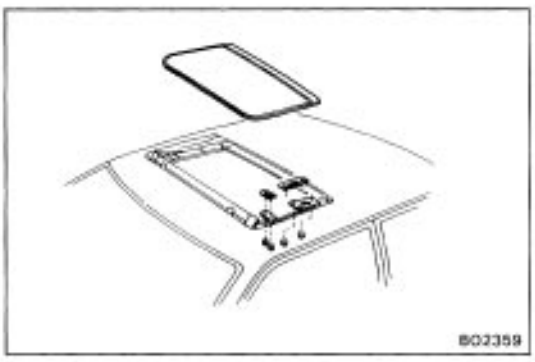

TO REMOVE ONLY SLIDING ROOF PANEL

(a) Pull loose the clips and slide the headlining rearward.

(b) Remove the front and rear shoe nuts.

(c) Remove the roof panel.

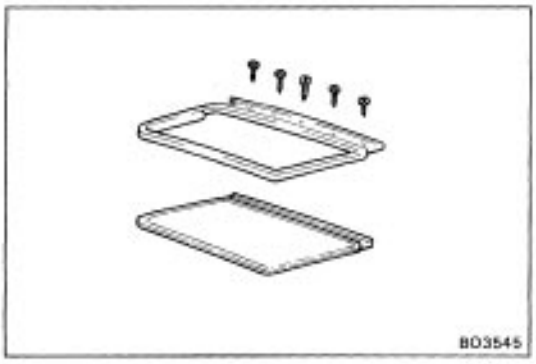

REPLACEMENT OF WEATHERSTRIP

IF NECESSARY, REPLACE WEATHERSTRIP

(a) Remove five screws and the weatherstrip.
(b) Install new weatherstrip to the sliding roof panel.
(c) Clean the screw installation positions.
(d) Install five new screws.
HINT: If reusing the screws, apply sealer at the screw installation positions before installing the screws.
(e) Check for leaks.

SAFETY PAD

Ex. Coupe

COMPONENTS

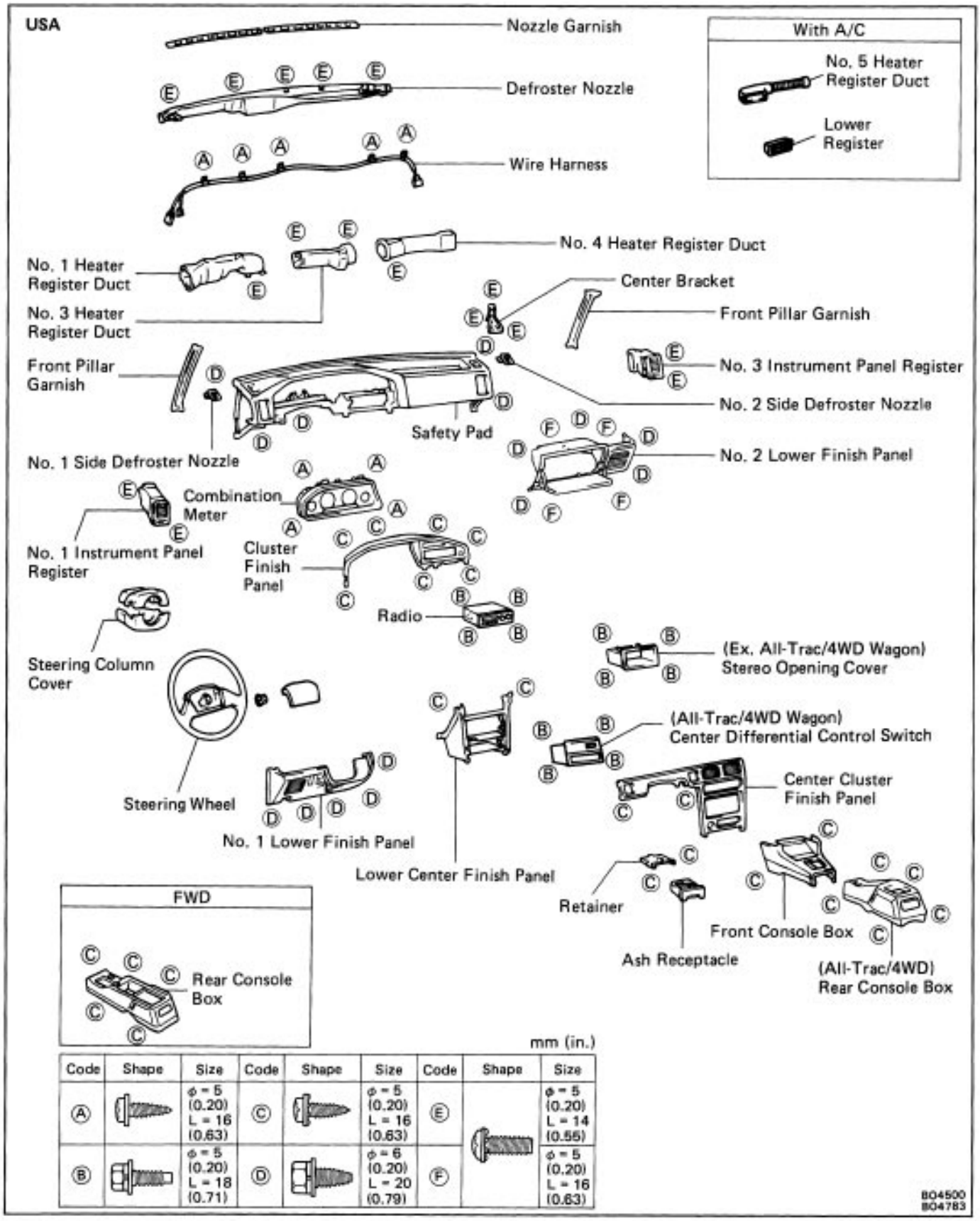

mm (in.)

Code	Shape	Size	Code	Shape	Size	Code	Shape	Size
Ⓐ		ϕ = 5 (0.20) L = 16 (0.63)	Ⓒ		ϕ = 5 (0.20) L = 16 (0.63)	Ⓔ		ϕ = 5 (0.20) L = 14 (0.55)
Ⓑ		ϕ = 5 (0.20) L = 18 (0.71)	Ⓓ		ϕ = 6 (0.20) L = 20 (0.79)	Ⓕ		ϕ = 5 (0.20) L = 16 (0.63)

B04500
B04783

COMPONENTS (Cont'd)

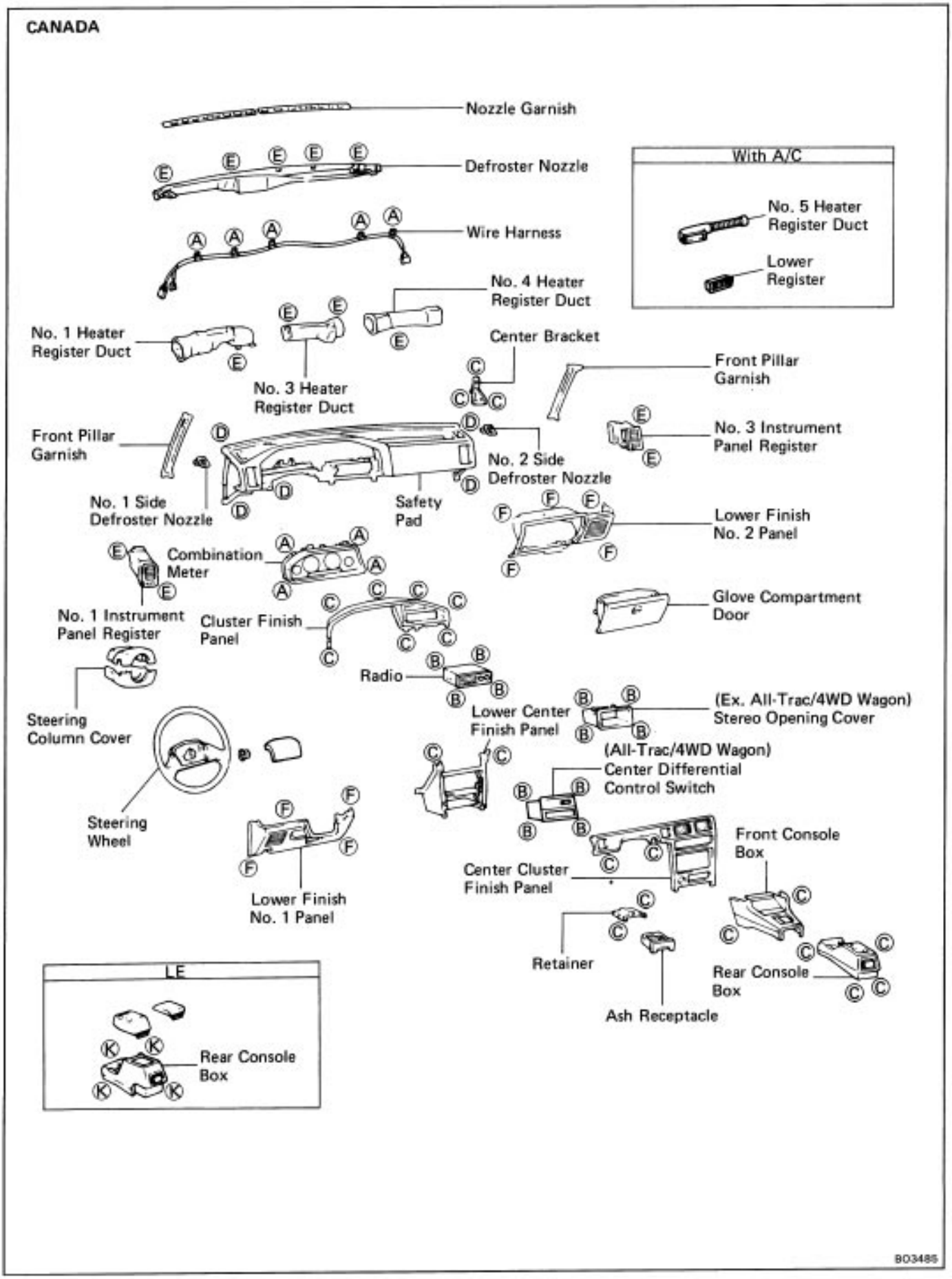

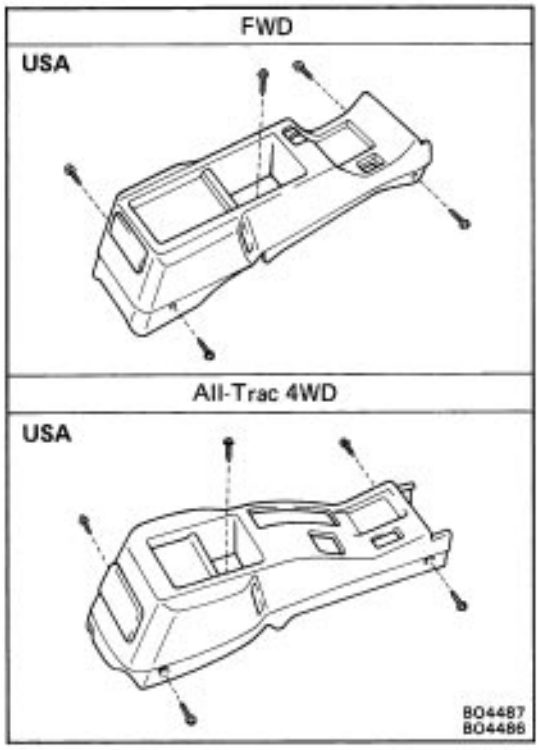

REMOVAL OF SAFETY PAD

(See page BO–76, 77)

1. DISCONNECT BATTERY CABLE FROM NEGATIVE TERMINAL

2. REMOVE STEERING WHEEL

(See page SR–3)

3. REMOVE RIGHT AND LEFT FRONT PILLAR GARNISH

(See steps 1 on page BO–48)

4. REMOVE REAR CONSOLE BOX

(USA)

(a) Remove five screws and the rear console box.

(b) Disconnect the connectors.

(Canada)

(a) Remove four screws and the rear console box.

(b) Disconnect the connectors.

5. REMOVE FRONT CONSOLE BOX

Remove two screws and the front console box.

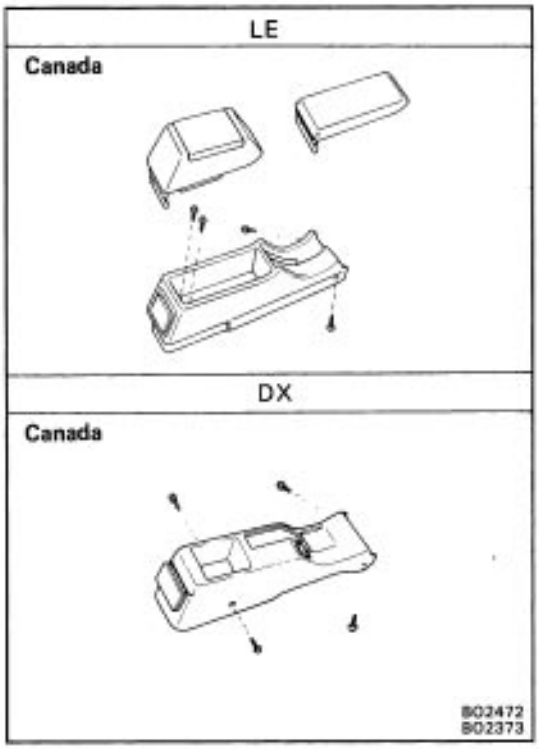

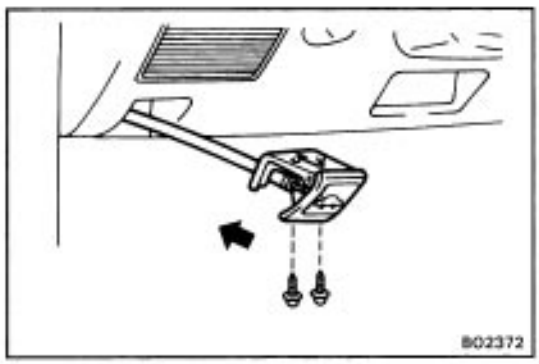

6. REMOVE ENGINE HOOD RELEASE LEVER

Remove two screws and the engine hood release lever.

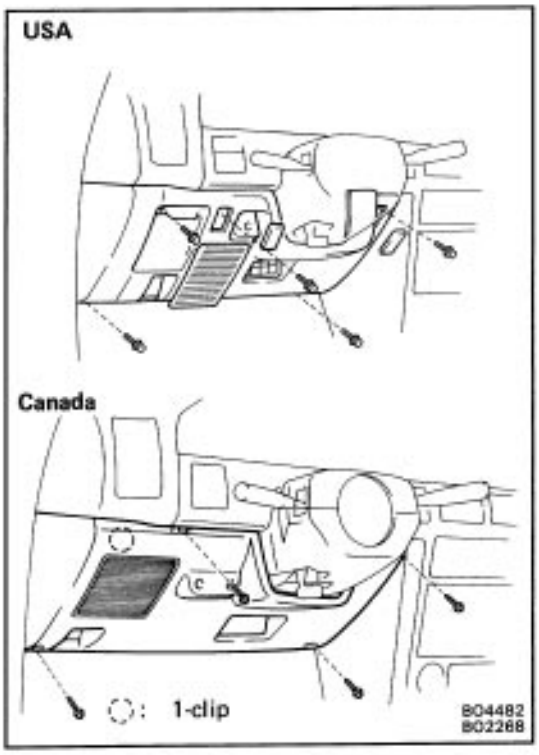

7. REMOVE LOWER FINISH NO. 1 PANEL

(a) Using a screwdriver, pry out the No. 1 panel speaker.
(b) Using a screwdriver, pry out the two panel hole covers.
(c) Remove five bolts and pull out the lower finish No. 1 panel.
(d) Disconnect the speaker connector.
(e) (w/ A/C)
Disconnect No.5 heater register duct.
HINT: Tape the screwdriver tip before use.
(Canada)
(a) Remove four screws and pullout the lower finish No. 1 panel.
(b) Disconnect the speaker connector.
(c) (w/ A/C)
Disconnect No.5 heater register duct.

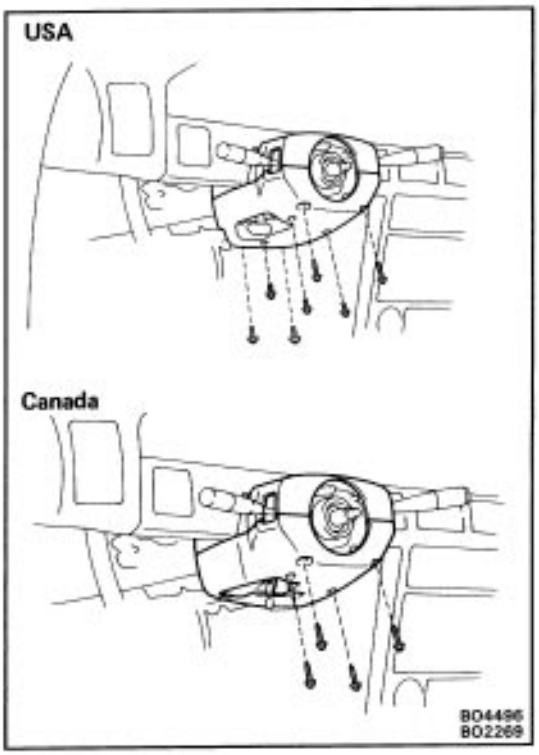

8. REMOVE STEERING COLUMN COVERS

(USA)
Remove seven screws and the steering column covers.
(Canada)
Remove four screws and the steering column covers.

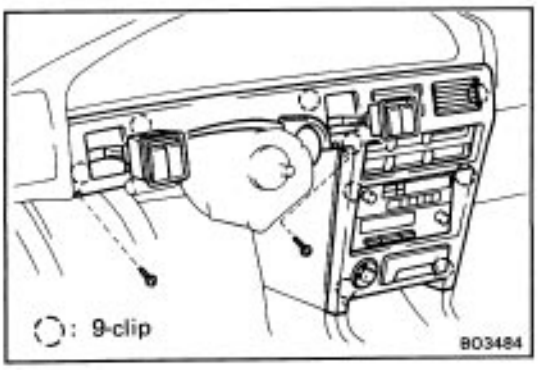

9. REMOVE CENTER CLUSTER FINISH PANEL

(a) Using a screwdriver, pry loose the two switches.
HINT: Tape the screwdriver tip before use.
(b) Disconnect the connectors and remove swItches.
(c) Remove two screws and pull out the center cluster finish panel.
(d) Disconnect the connector.

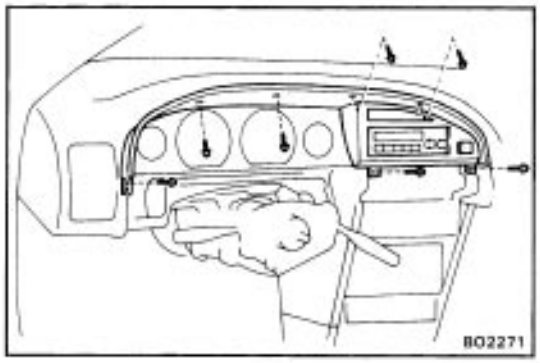

10. REMOVE CLUSTER FINISH PANEL

(a) Remove seven screws and the cluster finish–panel.
(b) Disconnect the connector.

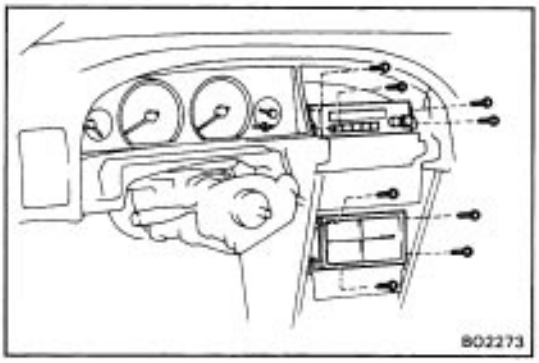

11. REMOVE RADIO

Remove four bolts, then disconnect connector and antenna cable.

12. REMOVE STEREO OPENING COVER OR CENTER DIFFERENTIAL CONTROL SWITCH

(a) Remove four bolts and cover or switch.
(b) (w/ Center differential control switch)
Disconnect the connector.

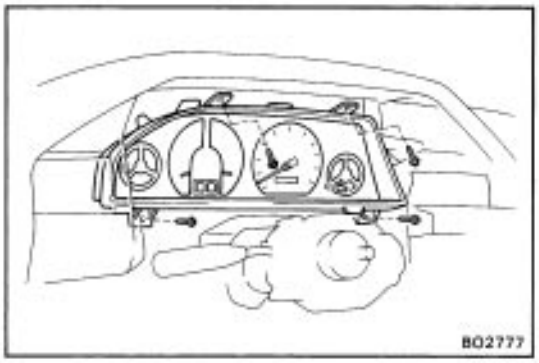

13. REMOVE COMBINATION METER

(a) Remove four screws.
(b) Disconnect the connectors and remove the combination meter.

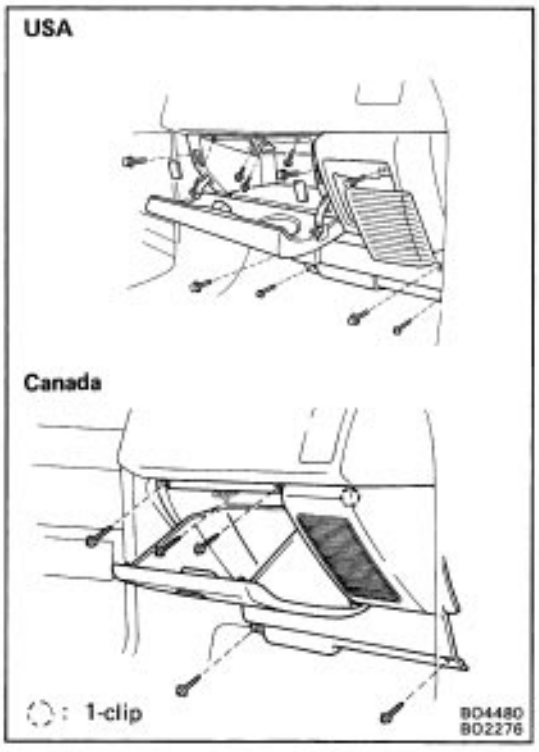

14. REMOVE LOWER FINISH NO.2 PANEL with GLOVE COMPARTMENT DOOR

(USA)
(a) Remove two screws and striker.
(b) Using a screwdriver, pry out the No. 2 panel speaker.
(e) Using a screwdriver, pry out two glove compartment plates.
(d) Remove five bolts.
(e) Remove four screws and pull out the lower finish No. 2 panel with glove compartment door.
(f) Disconnect the speaker connector.
HINT: Tape the screwdriver tip before use.
(Canada)
(a) Remove five screws and pullout the lower finish No. 2 panel with glove compartment door.
(b) Disconnect the speaker connector.

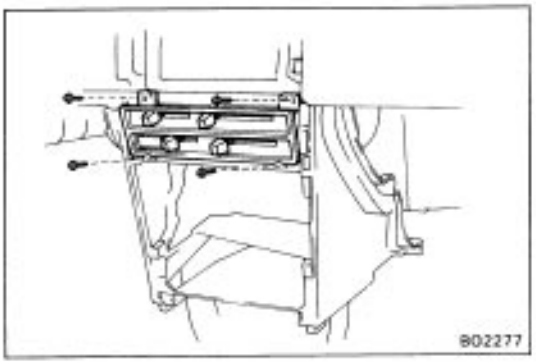

15. REMOVE HEATER CONTROL

(a) Remove four screws.

(b) Remove the heater control from safety pad and hang it.

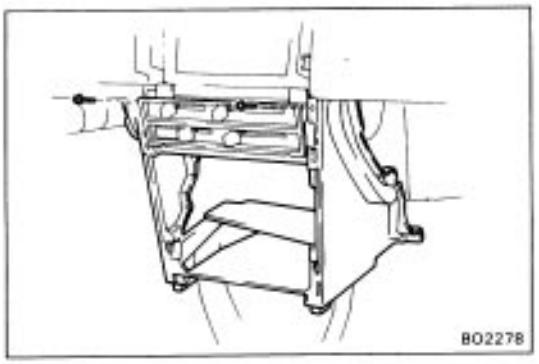

16. REMOVE LOWER CENTER FINISH PANEL

Remove two screws and the lower center finish panel.

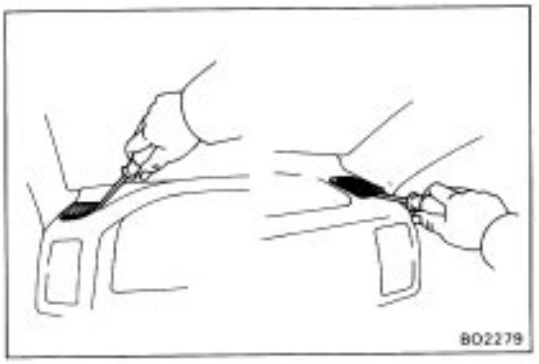

17. REMOVE NO.1 AND NO.2 SIDE DEFROSTER NOZZLE

HINT: Tape the screwdriver tip before use.

18. REMOVE SAFETY PAD

Remove five bolts, four connectors and the safety pad.

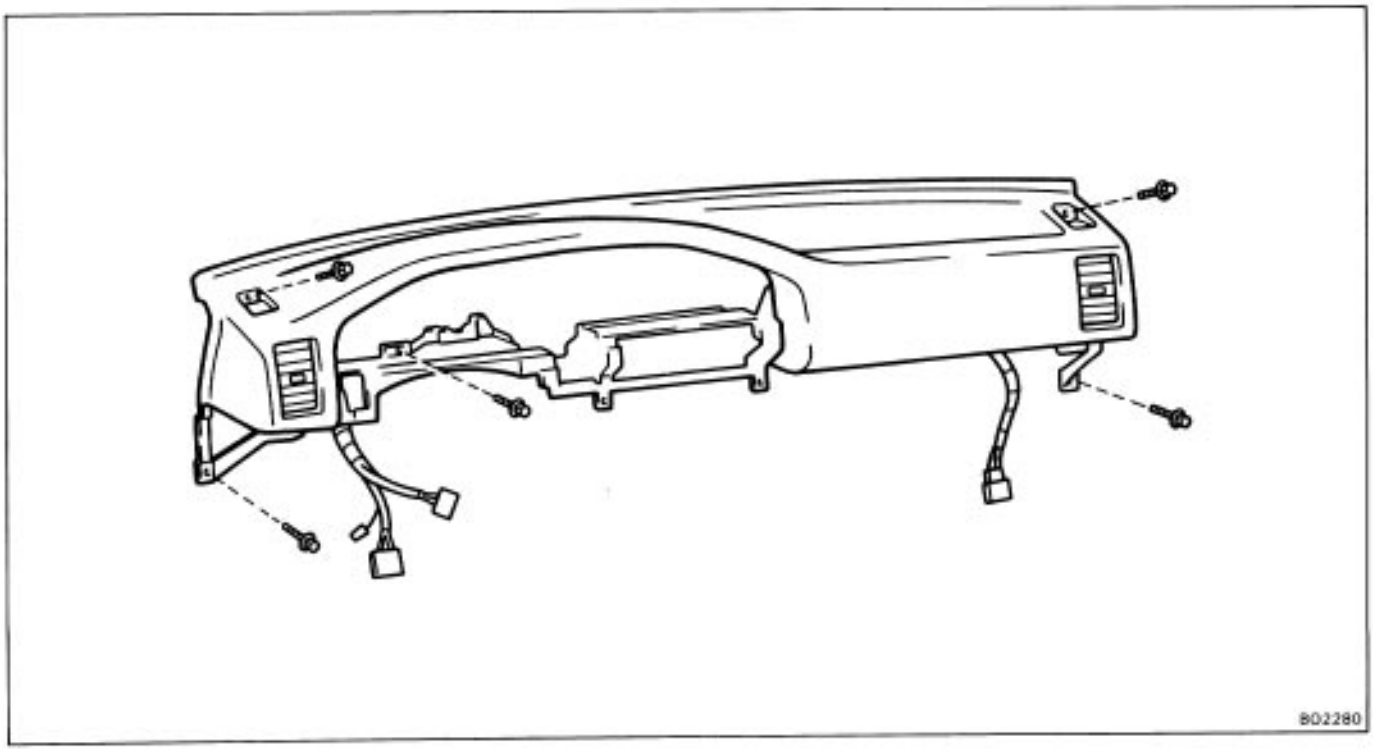

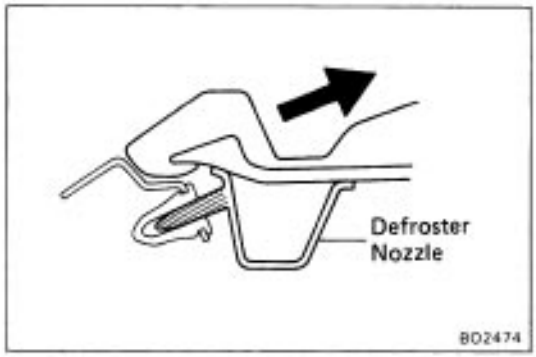

HINT: The defroster nozzle has a boss on the reverse side for clamping onto the clip on the body side. Therefore, when removing, pull upward at an angle.

19. REMOVE FOLLOWING PARTS FROM SAFETY PAD

(a) No.1 heater register duct
(b) No.3 heater register duct
(c) Center bracket
(d) No.4 heater register duct
(e) Defroster nozzle
(f) Wire harness
(g) No.1 instrument panel register
(h) No.3 instrument panel register
(i) Nozzle garnishes

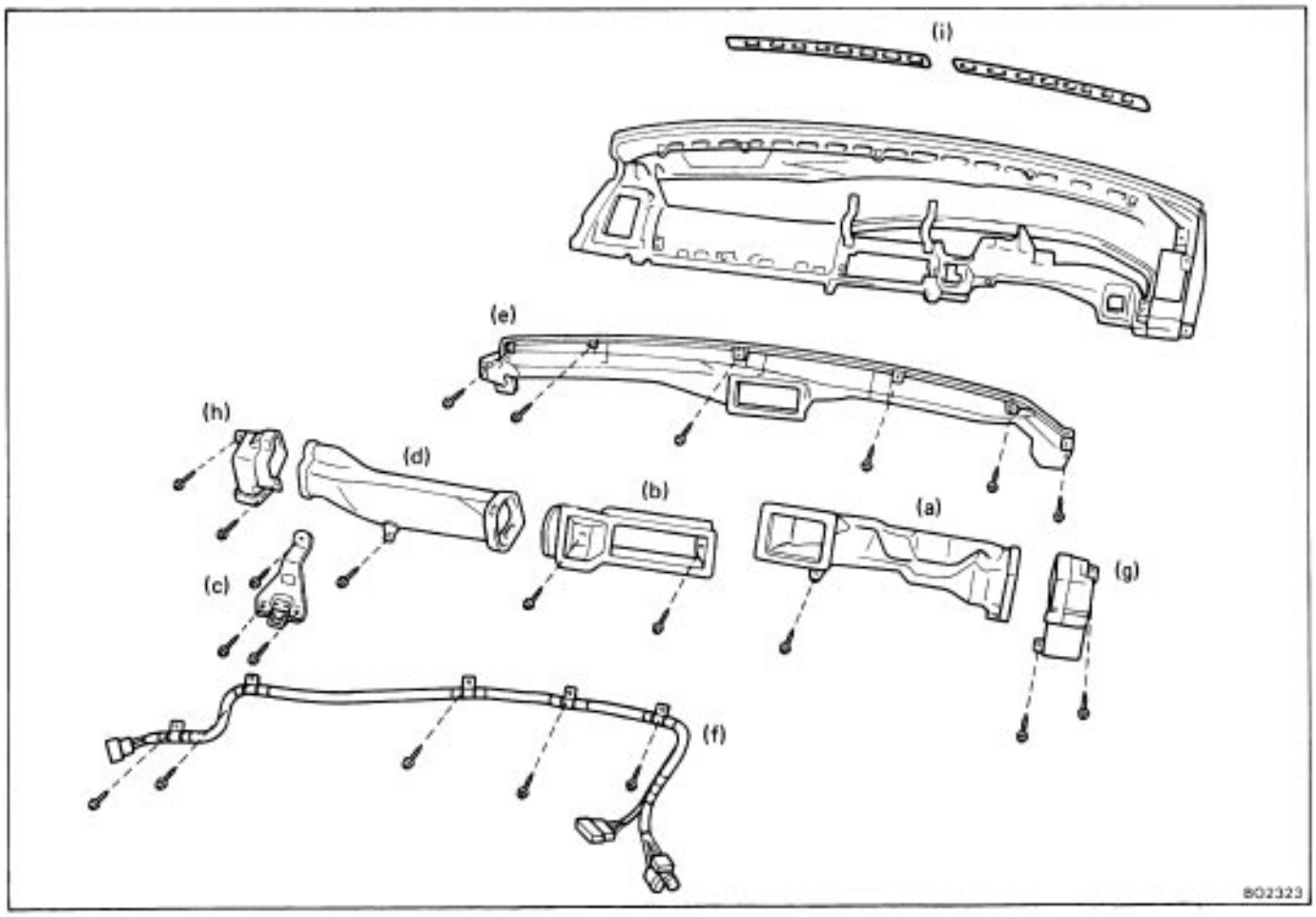

INSTALLATION OF SAFETY PAD

(See pages BO–76 and 77)

INSTALL SAFETY PAD PARTS BY FOLLOWING REMOVAL SEQUENCE IN REVERSE

Coupe

COMPONENTS

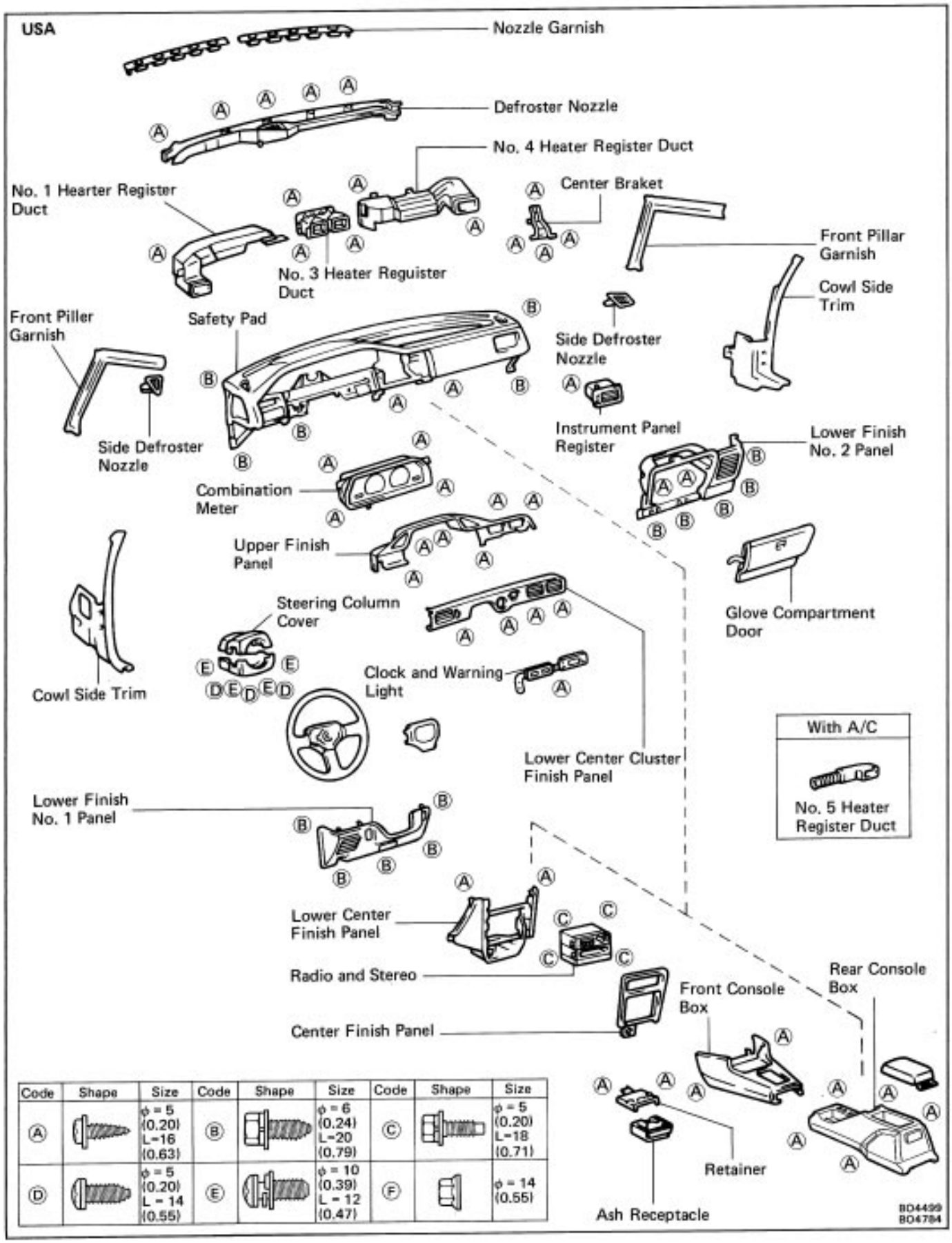

Code	Shape	Size	Code	Shape	Size	Code	Shape	Size
A		ϕ = 5 (0.20) L = 16 (0.63)	B		ϕ = 6 (0.24) L = 20 (0.79)	C		ϕ = 5 (0.20) L = 18 (0.71)
D		ϕ = 5 (0.20) L = 14 (0.55)	E		ϕ = 10 (0.39) L = 12 (0.47)	F		ϕ = 14 (0.55)

COMPONENTS (Cont'd)

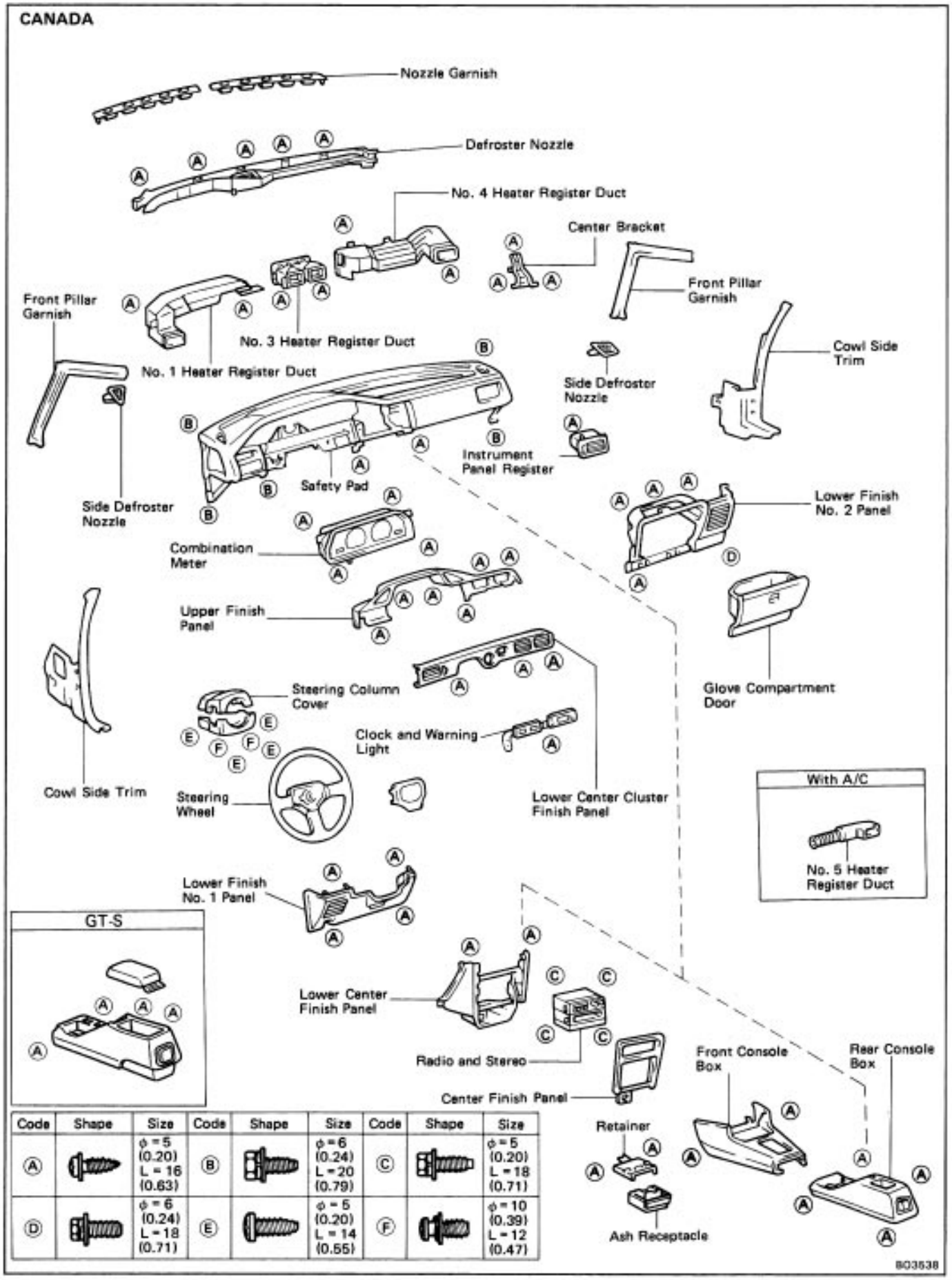

REMOVAL OF SAFETY PAD

(See page BO–83, 84)

1. DISCONNECT BATTERY CABLE FROM NEGATIVE TERMINAL

2. REMOVE STEERING WHEEL

(See page SR–3)

3. REMOVE RIGHT AND LEFT FRONT PILLAR GARNISH

(See steps 1 on page BO–48)

4. REMOVE ENGINE HOOD RELEASE LEVER

Remove two screws and the engine hood release lever.

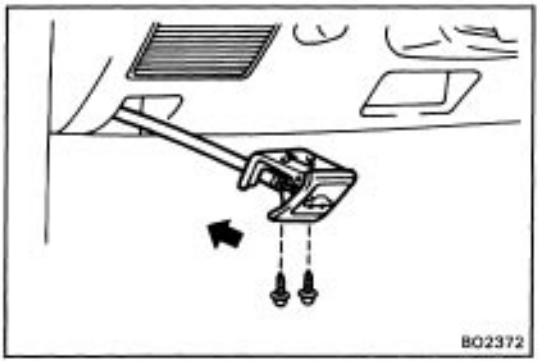

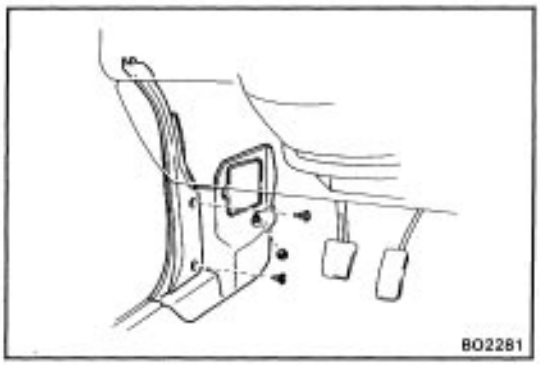

5. REMOVE LEFT COWL SIDE TRIM

(a) Remove the left scuff plate.

(b) Remove three clips and the left cow/ side trim.

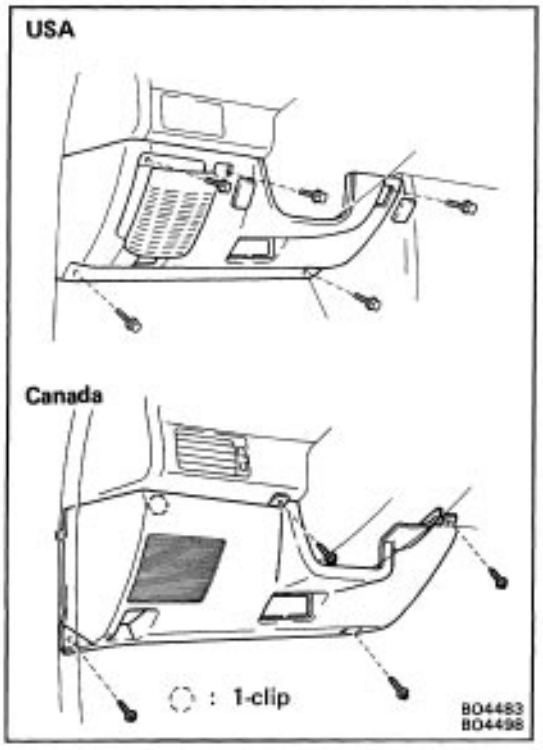

6. REMOVE LOWER FINISH NO. 1 PANEL

(USA)

(a) Using a screwdriver, pry out the No. 1 panel speaker.

HINT: Tape the screwdriver tip before use.

(b) Using the screwdriver, pry out the two panel hole covers.

(c) Remove five bolts and pull out the lower finish No. 1 panel.

(d) Disconnect the speaker connector.

(e) (w/ A/C)

Disconnect No.5 heater register duct.

(Canada)

(a) Remove four screws and pullout the lower finish No. 1 panel.

(b) Disconnect the speaker connector.

(c) (w/A/C)

Disconnect No.5 heater register duct.

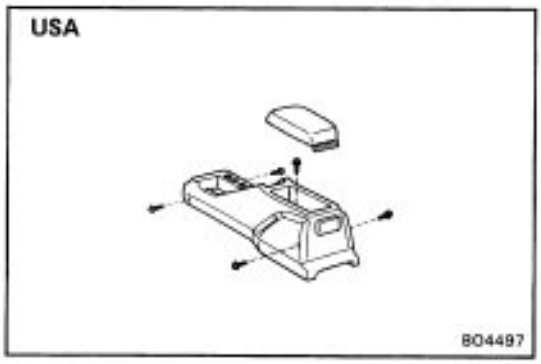

7. REMOVE REAR CONSOLE BOX

(USA)

(a) Remove five screws and the rear console box.

(b) Disconnect the connectors.

(Canada)

Remove four screws and the rear console box.

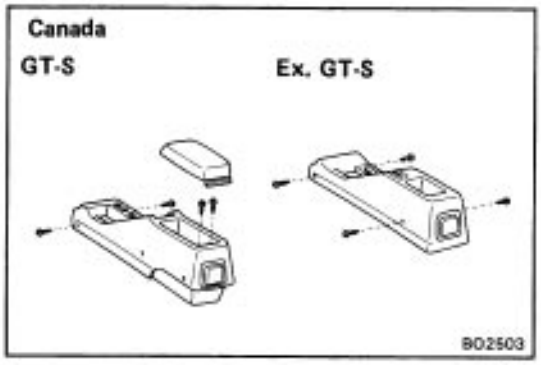

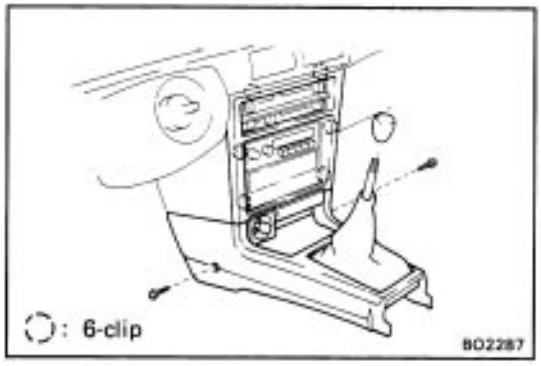

8. REMOVE FRONT CONSOLE BOX

Remove two screws and the front console box.

9. REMOVE CENTER CLUSTER FINISH PANEL

(a) Pull out center cluster finish panel.

(b) Disconnect the connector.

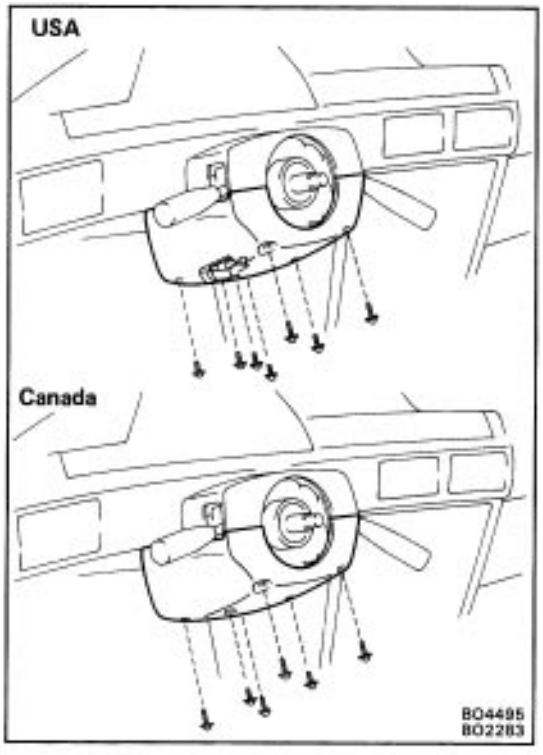

10. REMOVE STEERING COLUMN COVERS

(USA)

Remove seven screws and the lower column covers.

(Canada)

Remove six screws and the lower column covers.

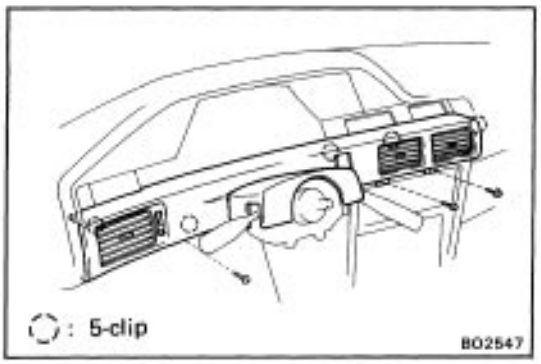

11. REMOVE LOWER CENTER CLUSTER FINISH PANEL

(a) (USA)

Remove four screws and pull out the lower center cluster finish panel with upper column cover.

(b) (Canada)

Remove three screws and pull out the lower center cluster finish. panel with upper column cover.

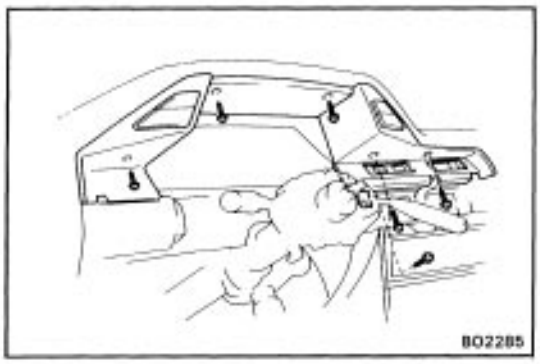

12. REMOVE UPPER FINISH PANEL

(a) Remove six screws and the upper finish panel.

(b) Disconnect the switch connectors.

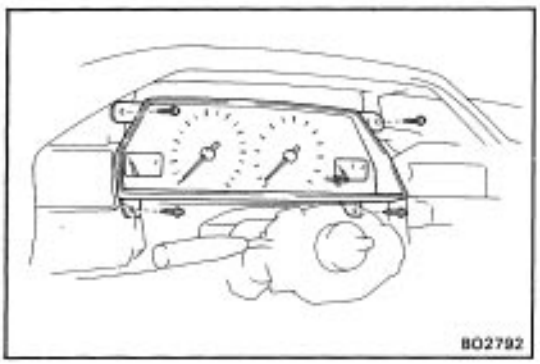

13. REMOVE COMBINATION METER

(a) Remove four screws.

(b) Disconnect the connectors and remove the combination meter.

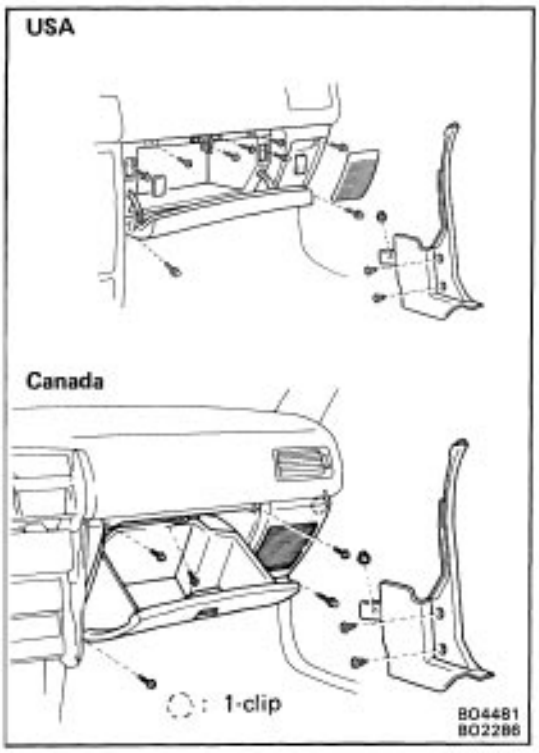

14. REMOVE RIGHT COw/ SIDE TRIM

(a) Remove the right scuff plate.

(b) Remove three clips and the right cow/ side trim.

15. REMOVE LOWER FINISH NO.2 PANEL with GLOVE COMPARTMENT DOOR

(USA)

(a) Using a screwdriver, pry out the No. 2 panel speaker.

(b) Using a screwdriver, pry out two glove compartment plates.

(c) Remove five bolts.

(d) Remove two screws and the lock striker.

(e) Remove two screws and pull out the lower finish No. 2 panel with glove compartment door.

(f) Disconnect the speaker connector.

HINT: Tape the screwdriver tip before use.

(Canada)

(a) Remove four screws, the bolt and pull out the lower finish No.2 panel with glove compartment door.

(b) Disconnect the speaker connector.

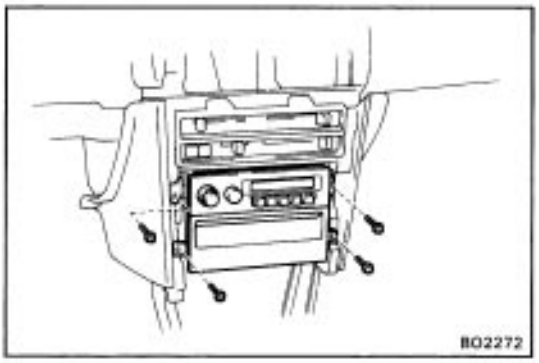

16. REMOVE RADIO AND STEREO

(a) Remove the four bolts, radio and stereo.
(b) Disconnect the connector and antenna cable.

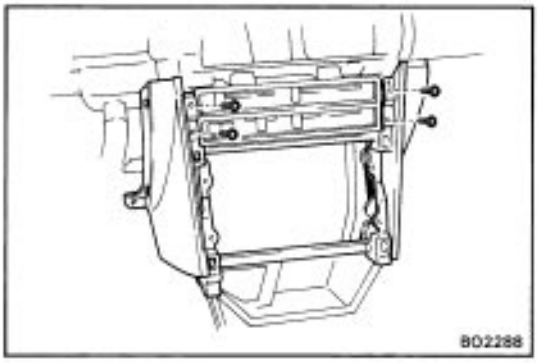

17. REMOVE LOWER CENTER FINISH PANEL

Remove four screws and the lower center finish panel.



18. REMOVE HEATER CONTROL

(a) Remove two screws.
(b) Remove the heater control from safety pad and hang it.

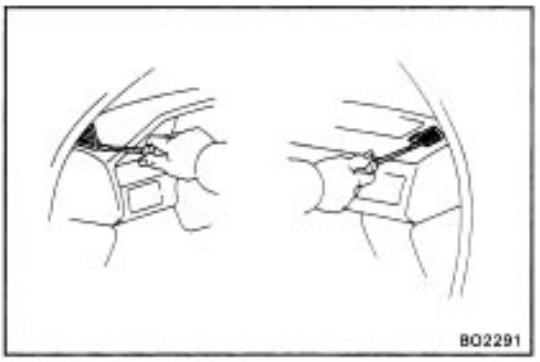

19. REMOVE RIGHT AND LEFT SIDE DEFROSTER NOZZLE

HINT: Tape the screwdriver tip before use.

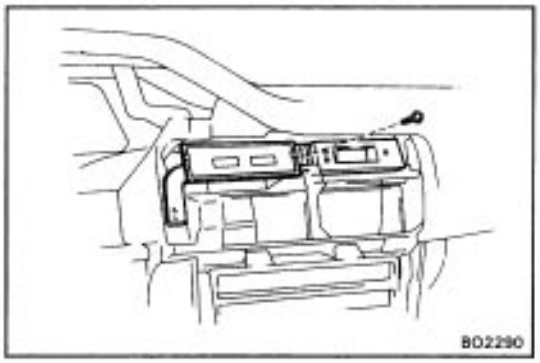

20. REMOVE CLOCK AND WARNING LIGHT

(a) Remove the screw, clock and warning light.
(b) Disconnect two connectors.

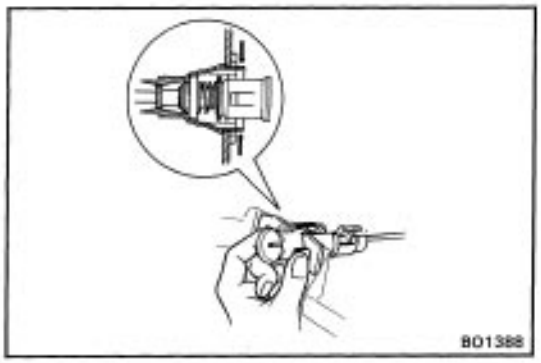

21. REMOVE SAFETY PAD

(a) Push on the paw/s of speedometer cable and pull it from safety pad.

(b) Remove two screws, five bolts and the safety pad.

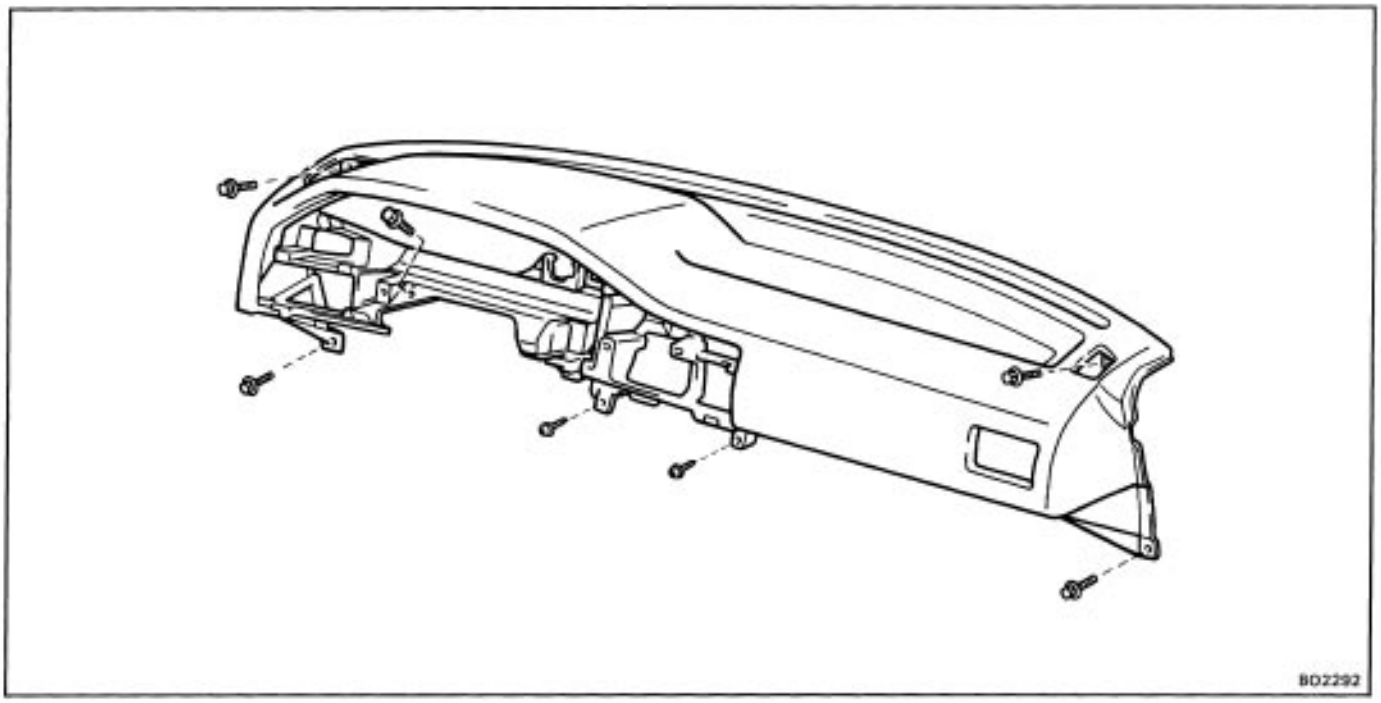

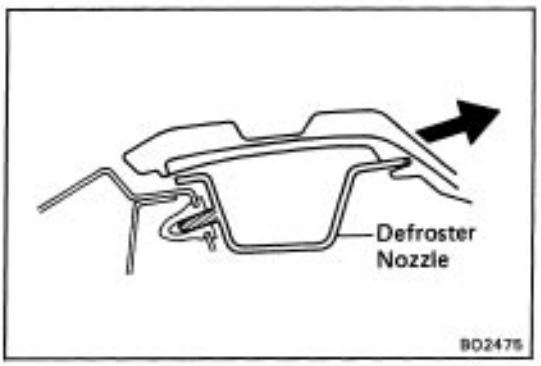

HINT: The defroster nozzle has a boss on the reverse side for clamping onto the clip on the body side. Therefore, when removing, pull upward at an angle.

22. REMOVE FOLLOWING PARTS FROM SAFETY PAD

(a) No.1 heater register duct
(b) No.3 heater register duct
(c) Center bracket
(d) No.4 heater register duct
(e) Defroster nozzle
(f) Instrument panel register
(g) Nozzle garnishes
(h) No.1 mounting bracket
(i) No.5 mounting bracket

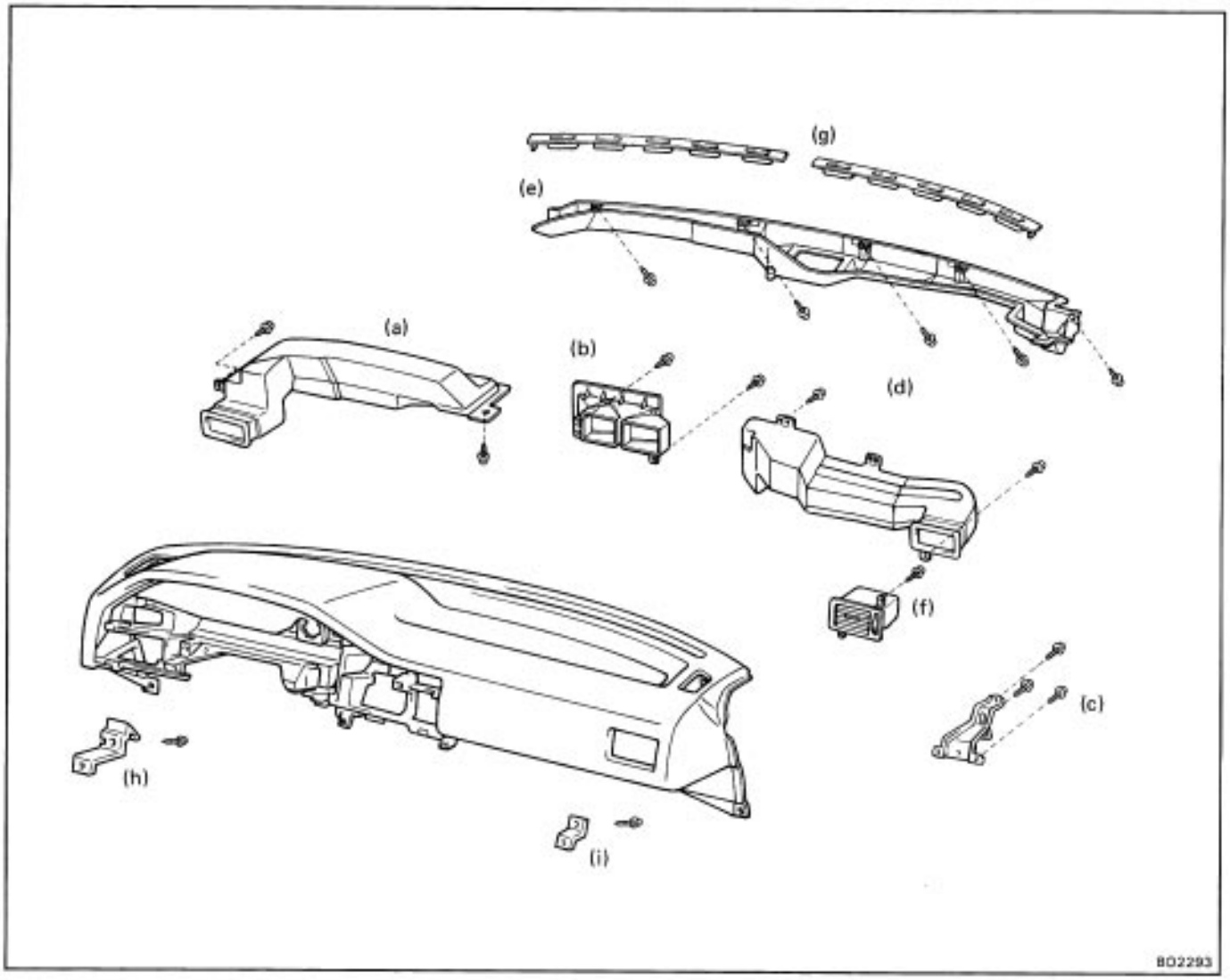

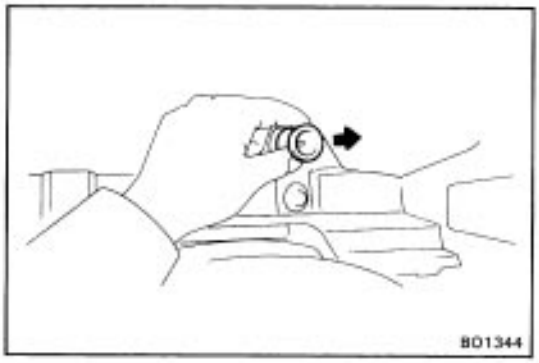

INSTALLATION OF SAFETY PAD

(See pages BO–84 and 85)

INSTALL SAFETY PAD PARTS BY FOLLOWING REMOVAL SEQUENCE IN REVERSE ;

HINT: When reinstall the speedometer cable, first pull on the cable guide casing.

SEAT

Front Seat

COMPONENTS

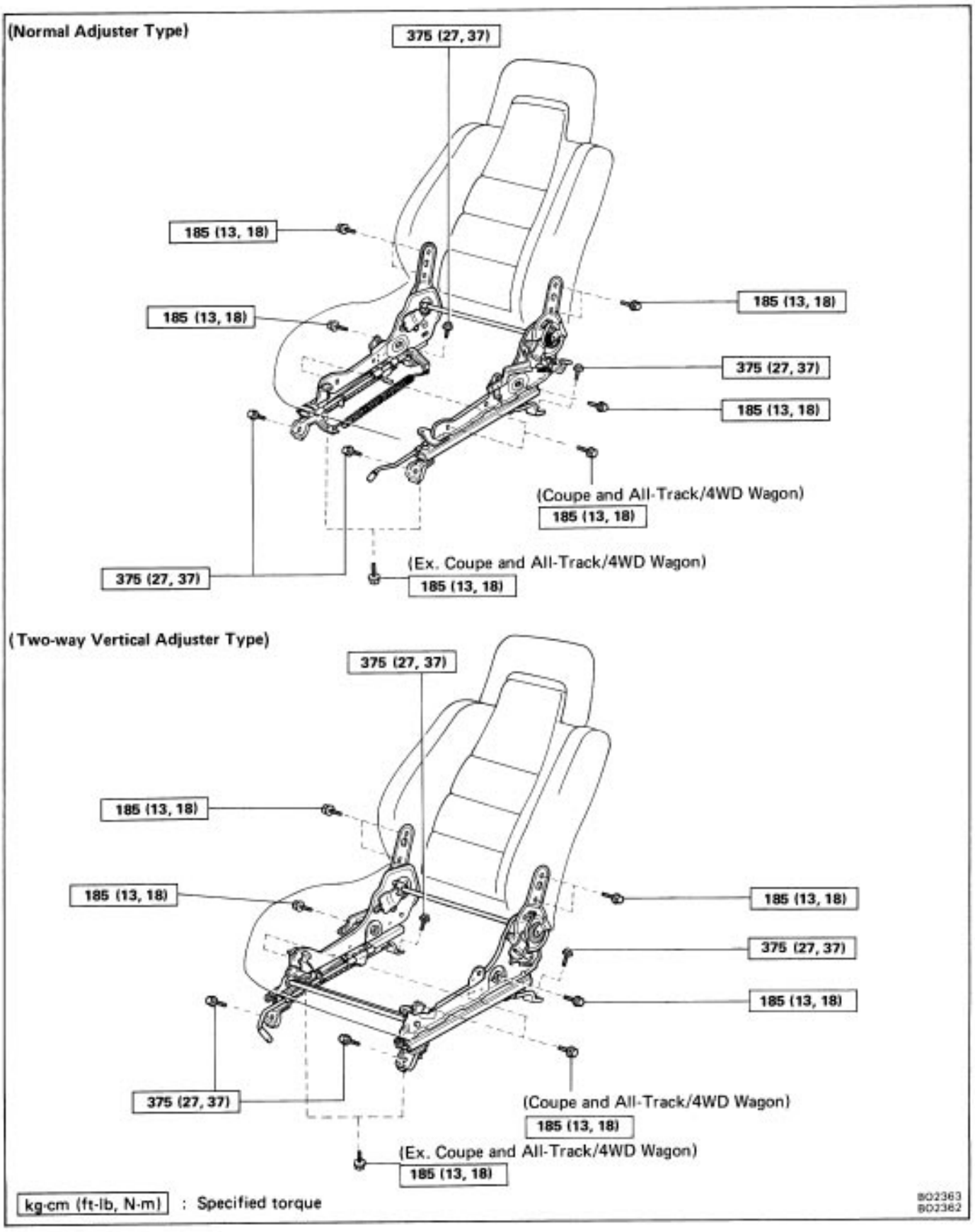

Rear Seat

COMPONENTS

Sedan (Fixed Type)

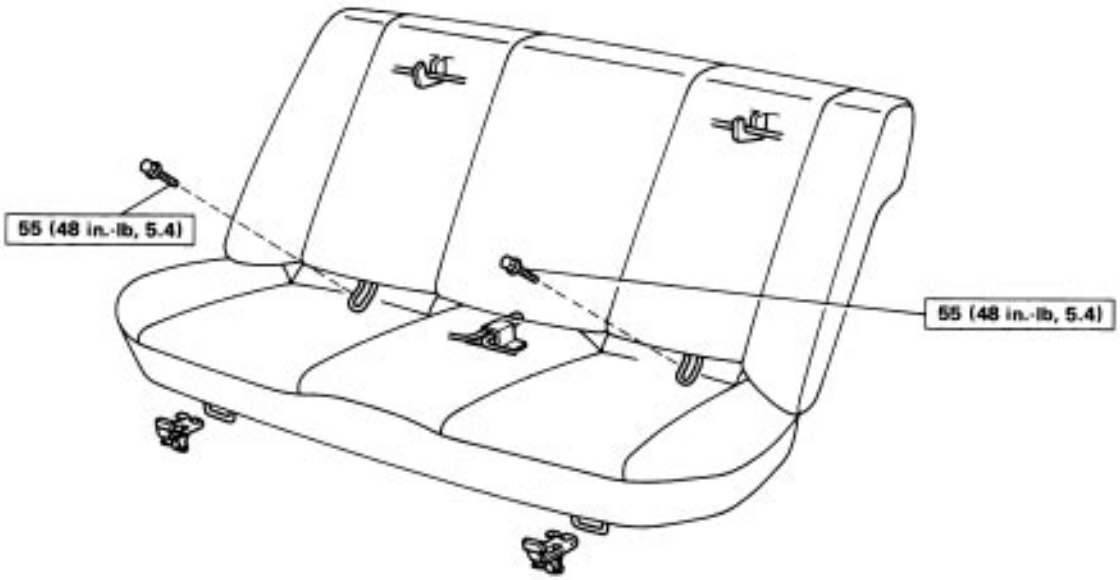

Sedan (Separate Type)

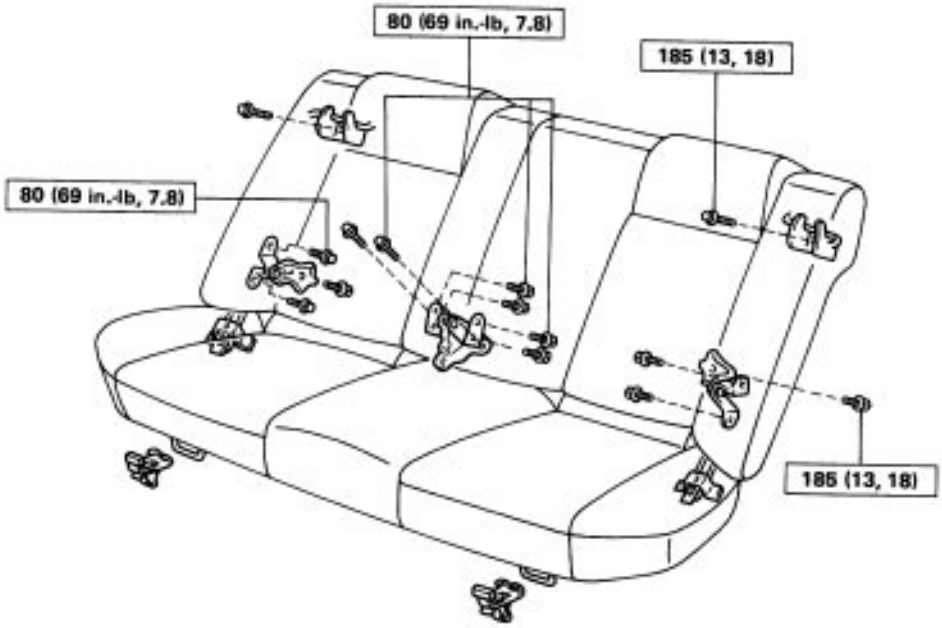

kg-cm (ft-lb, N-m) : Specified torque

B02411
B03615

COMPONENTS (Cont'd)

Coupe (Fixed Type)

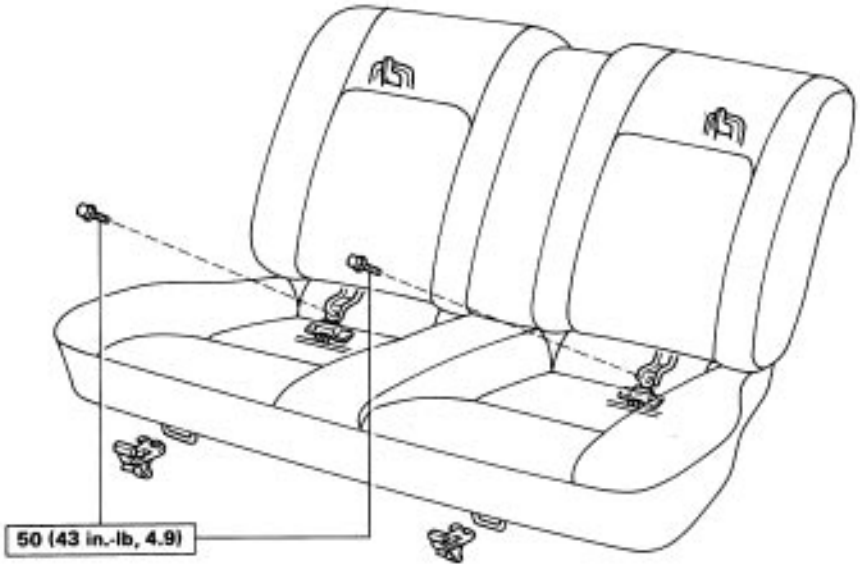

Coupe (Separate Type)

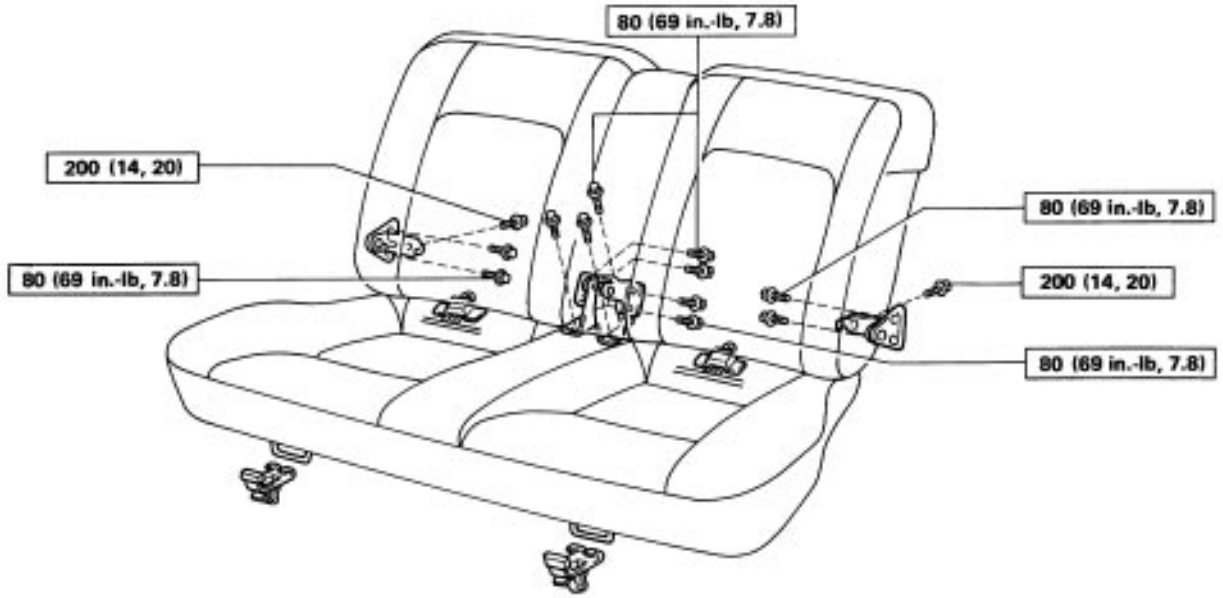

kg-cm (ft-lb, N·m) : Specified torque

BO2409
BO2410

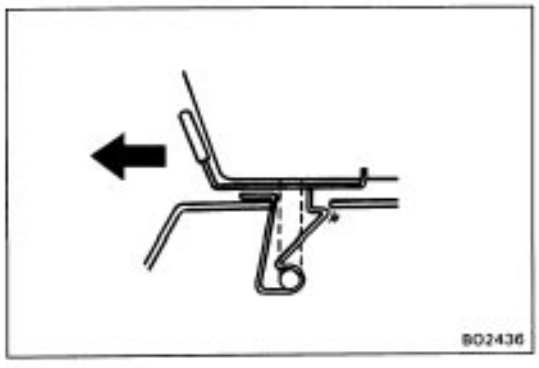

REMOVAL OF REAR SEAT CUSHION

Pull the front left and right levers forward and pull up the seat cushion.

COMPONENTS(Cont'd)

FWD Wagon

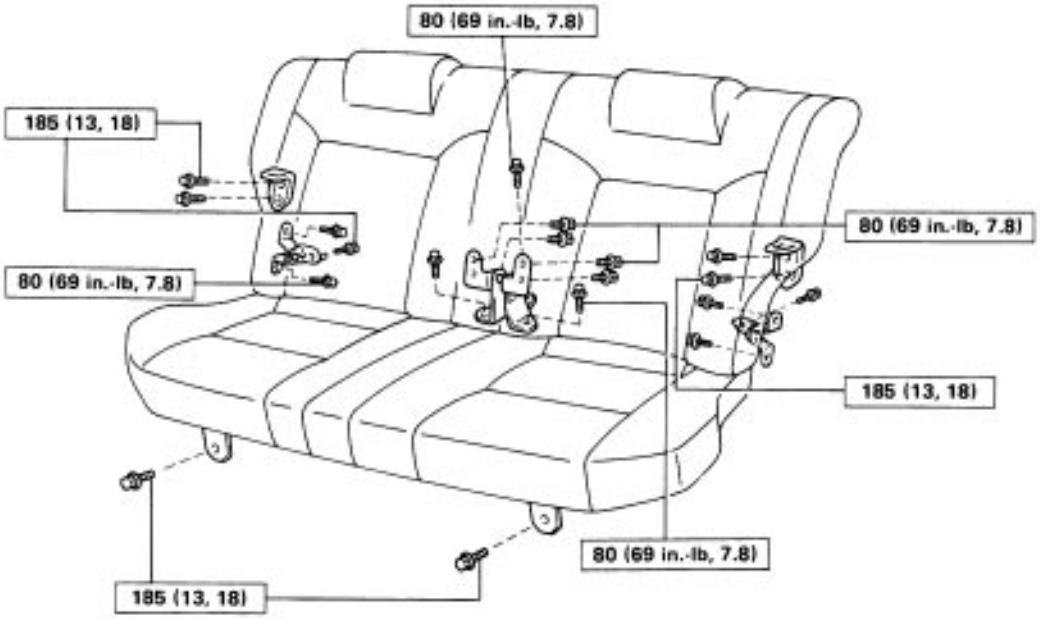

All-Track/4WD Wagon

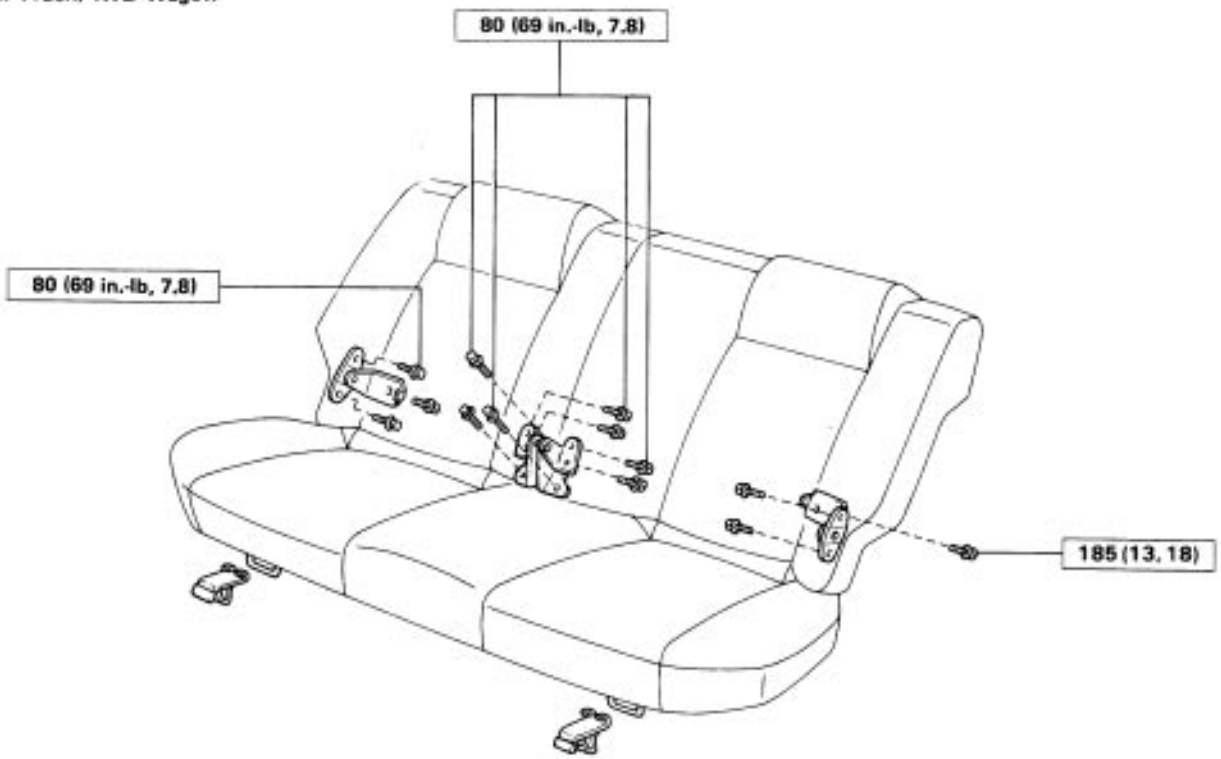

kg-cm (ft-lb, N-m) : Specified torque

BO2440
BO3098

SEAT BELTS

COMPONENTS

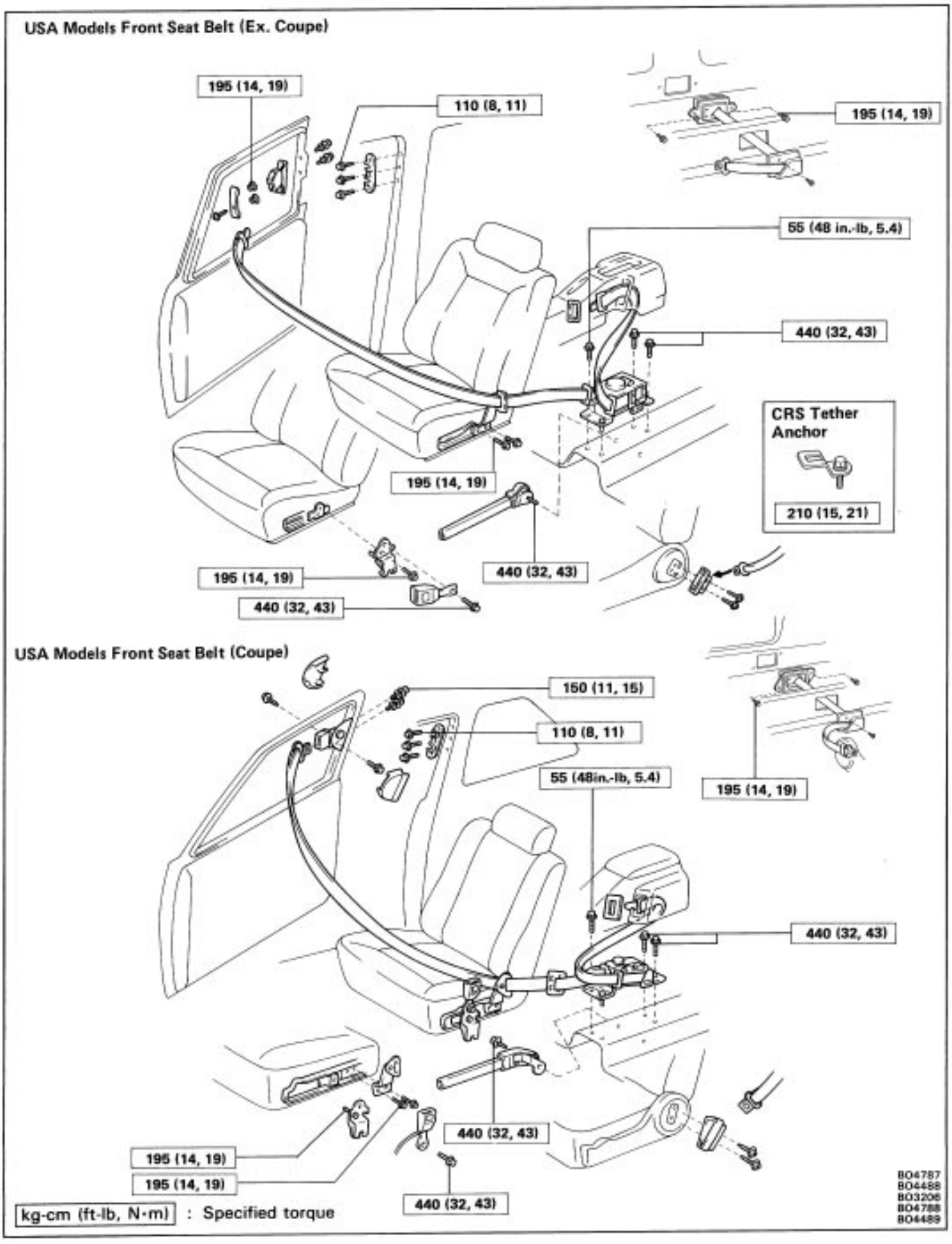

COMPONENTS (Cont'd)

USA Models Rear Seat Belt and CANADA Models (Ex. Coupe)

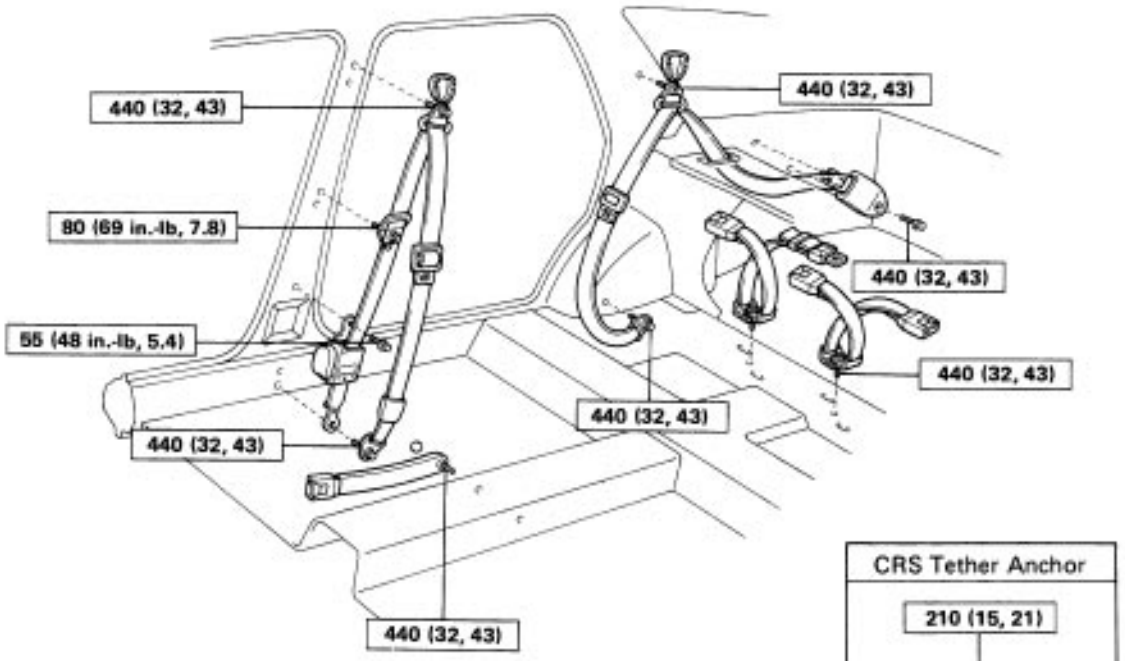

CRS Tether Anchor

210 (15, 21)



USA Models Rear Seat Belt and CANADA Models (Coupe)

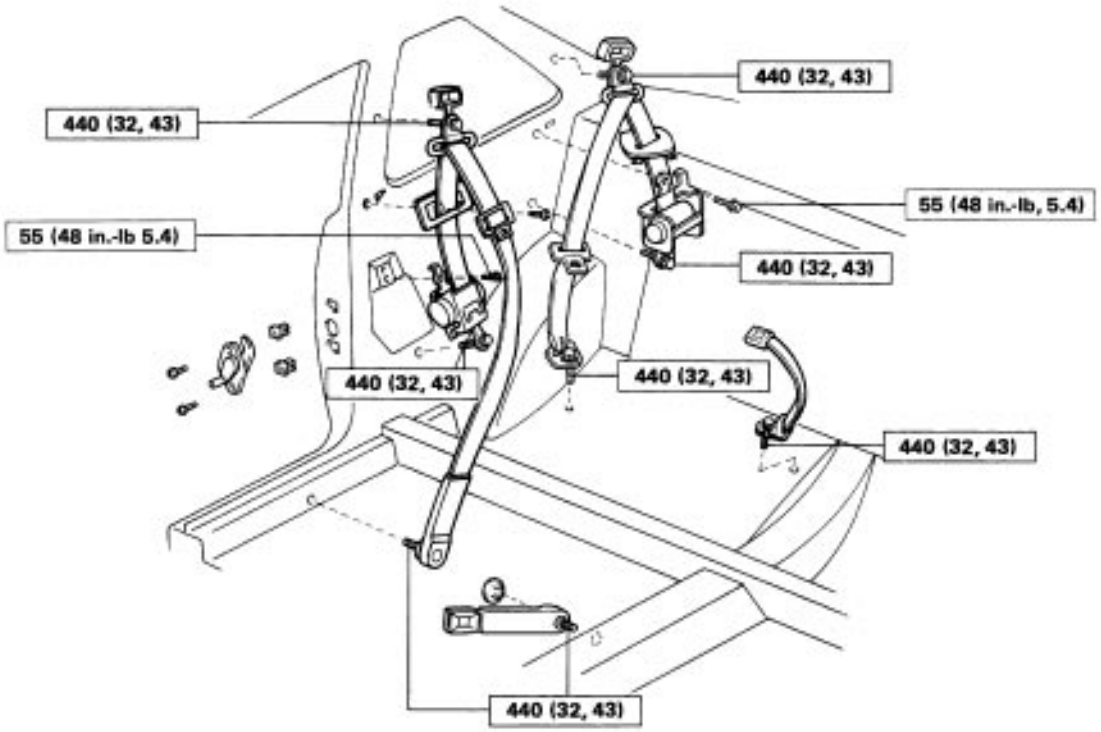

kg-cm (ft-lb, N·m) : Specified torque

BO3209
BO3206
BO3539

COMPONENTS (Cont'd)

USA and CANADA Models Rear Seat Belt (FWD Wagon)

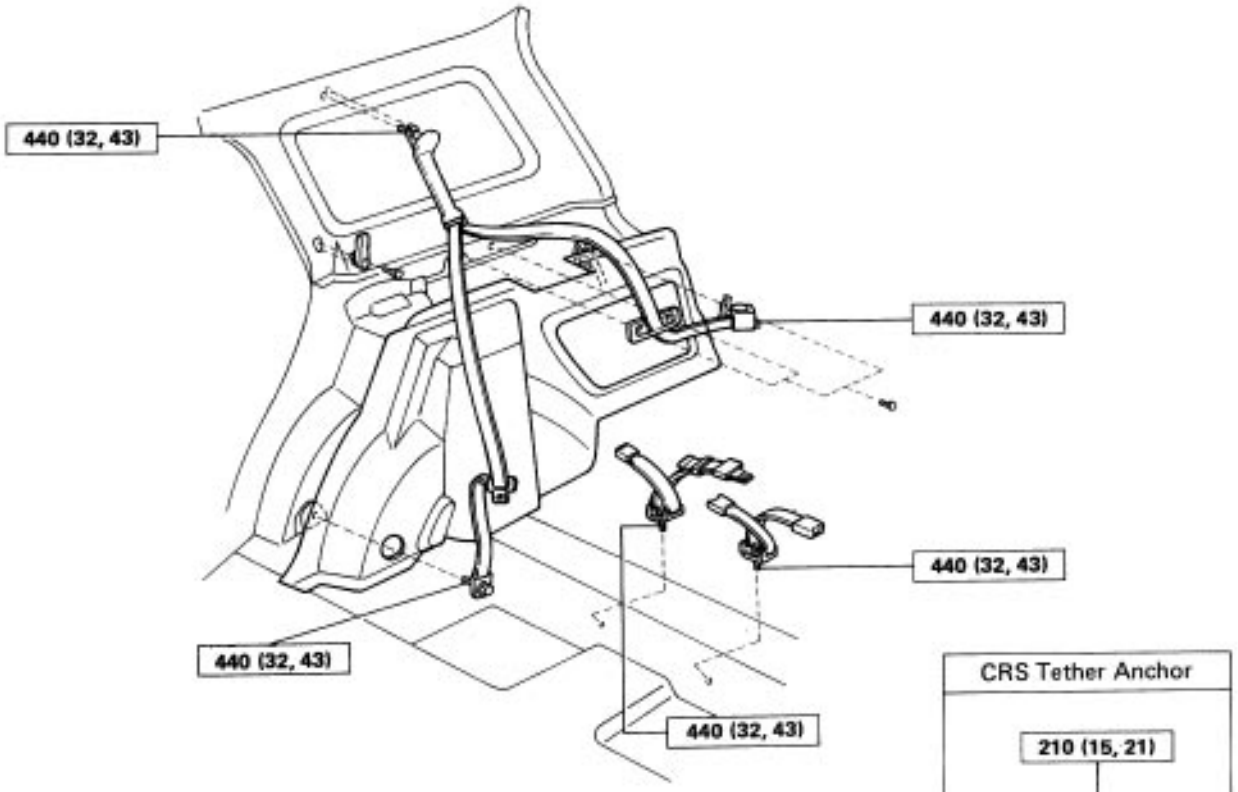

USA Models Rear Seat Belt and CANADA Models (ALL Track/4WD Wagon)

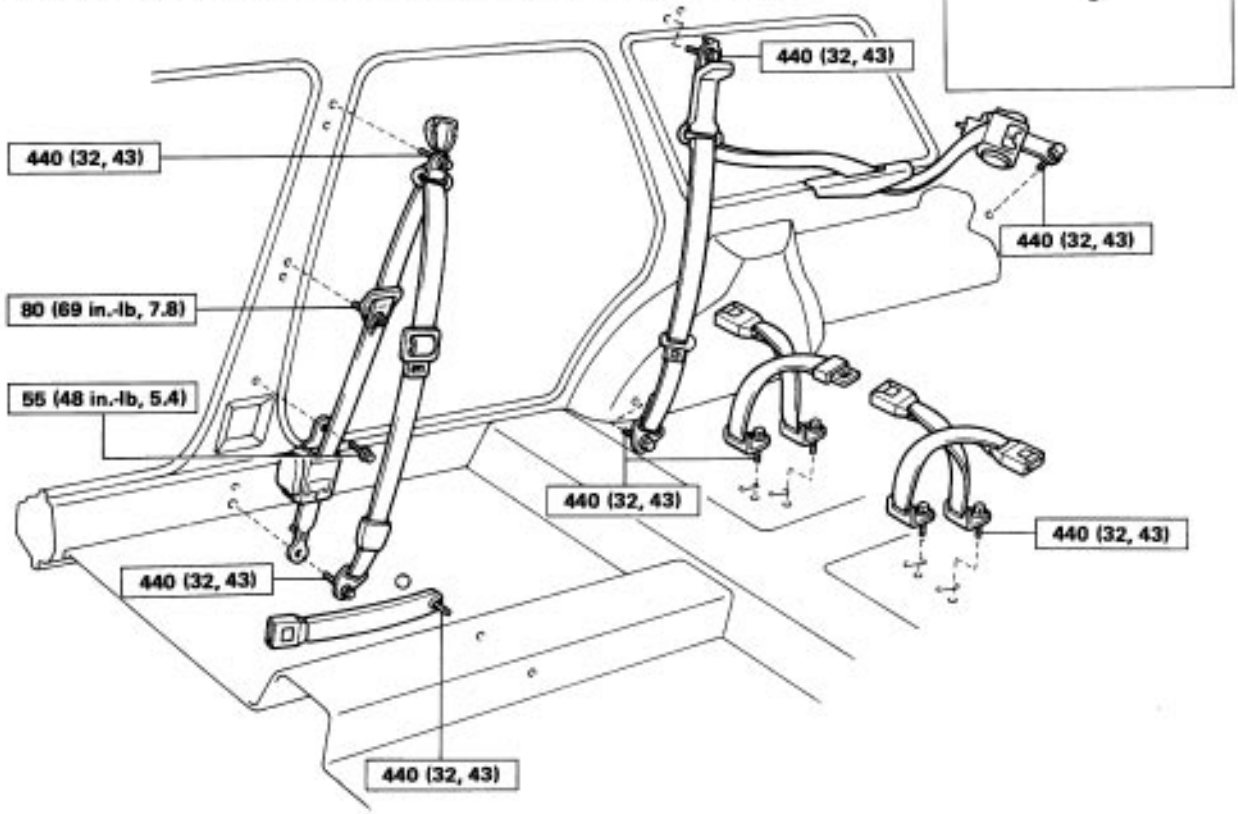

kg-cm (ft-lb, N-m) : Specified torque

BO2389
BO3206
BO3540

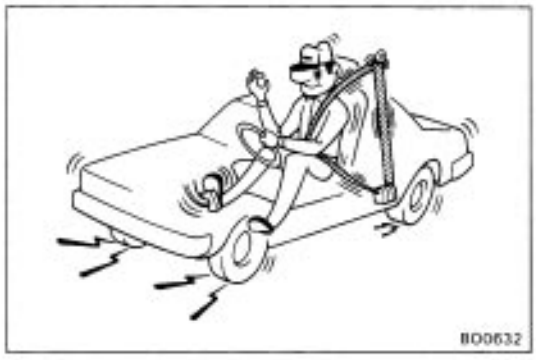

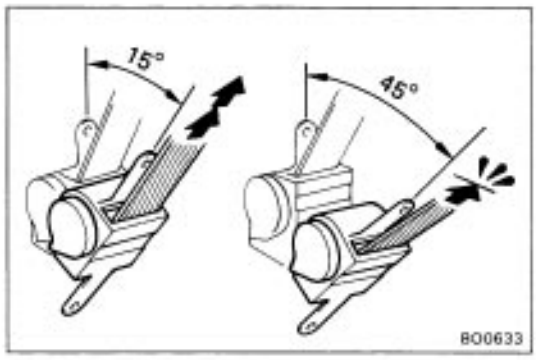

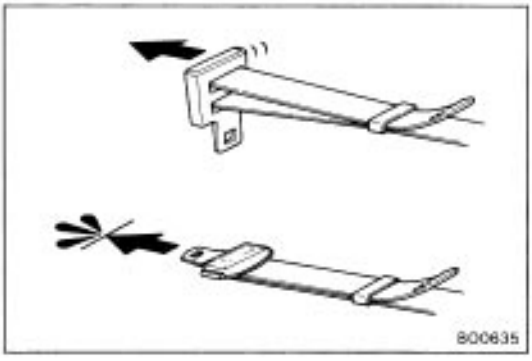

SEAT BELT

[Emergency Locking Retractor (ELR) Type]

1. RUNNING TEST (IN SAFE AREA)

(a) Fasten the front seat belt.

(b) Drive the car at 10 mph (16 km/h) and make a very hard stop.

(c) Check that the belt is locked and cannot be extended at this time.

HINT: Conduct this test in a safe area. If the belt does not lock, remove the belt mechanism assembly and conduct the following static check. Also, whenever installing a new belt assembly, verify the proper operation before installation.

2. STATIC TEST

(a) Remove the locking retractor assembly.

(b) Tilt the retractor Slowly.

(c) Verify that the belt can be pulled out at a tilt of 15 degrees or less, and cannot be pulled out at over 45 degrees of tilt.

If a problem is found, replace the assembly.

CENTER REAR SEAT BELT

(Manual Type)

TESTING

(a) Adjust the belt to the proper length.

(b) Apply a firm load to the belt.

(c) Verify that the belt does not extend.

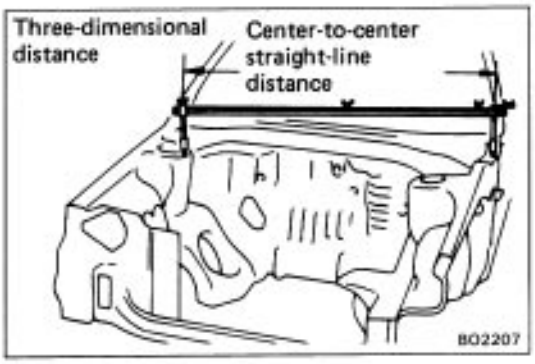

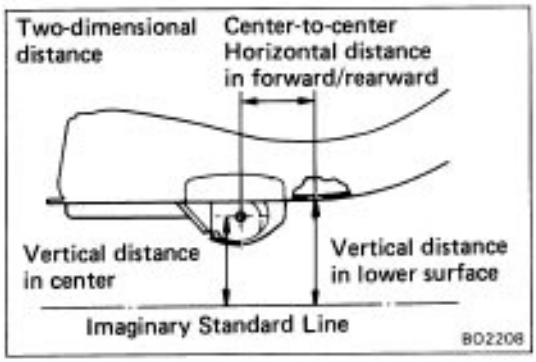

BODY DIMENSIONS

General Information

1. BASIC DIMENSIONS

(a) There are two types of dimensions in the diagram.
(Three–dimensional distance)

- Straight–line distance between the centers of two measuring points.

(Two–dimensional distance)

- Horizontal distance in forward/rearward between the centers of two measuring points.
- The height from an imaginary standard line.

(b) In cases in which only one dimension is given, left and right are symmetrical.

(c) The dimensions in the following drawing indicate actual distance. Therefore, please use the dimensions as a reference.

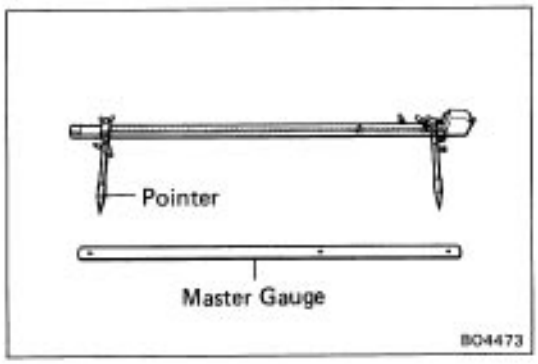

2. MEASURING

(a) Basically, all measurements are to be done with a tracking gauge. For portions where it is not possible to use a tracking gauge, a tape measure should be used.

(b) Use only a tracking gauge that has no looseness in the body, measuring plate, or pointers.

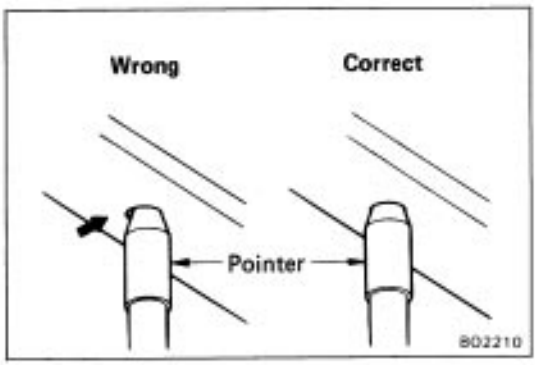

HINT:

1. The height of the left and right pointers must be equal.
2. Always calibrate the tracking gauge before measuring or after adjusting the pointer height.
3. Take care not to drop the tracking gauge or otherwise shock it.
4. Confirm that the pointers are securely in the holes.

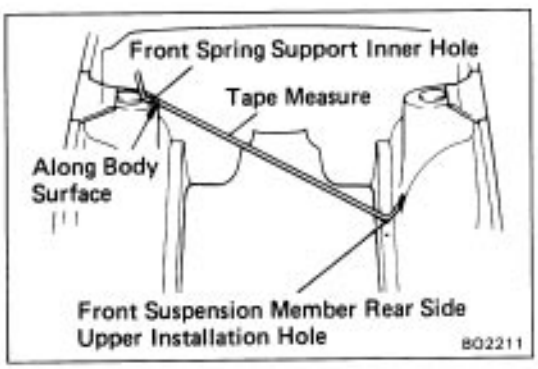

(c) When using a tape measure, avoid twists and bends in the tape.

(d) When tracking a diagonal measurement from the front spring support inner hole to the suspension member upper rear installation hole, measure along the front spring support panel surface.

Body Dimension Drawings

ENGINE COMPARTMENT (All Models)

(Three-dimensional Distance)

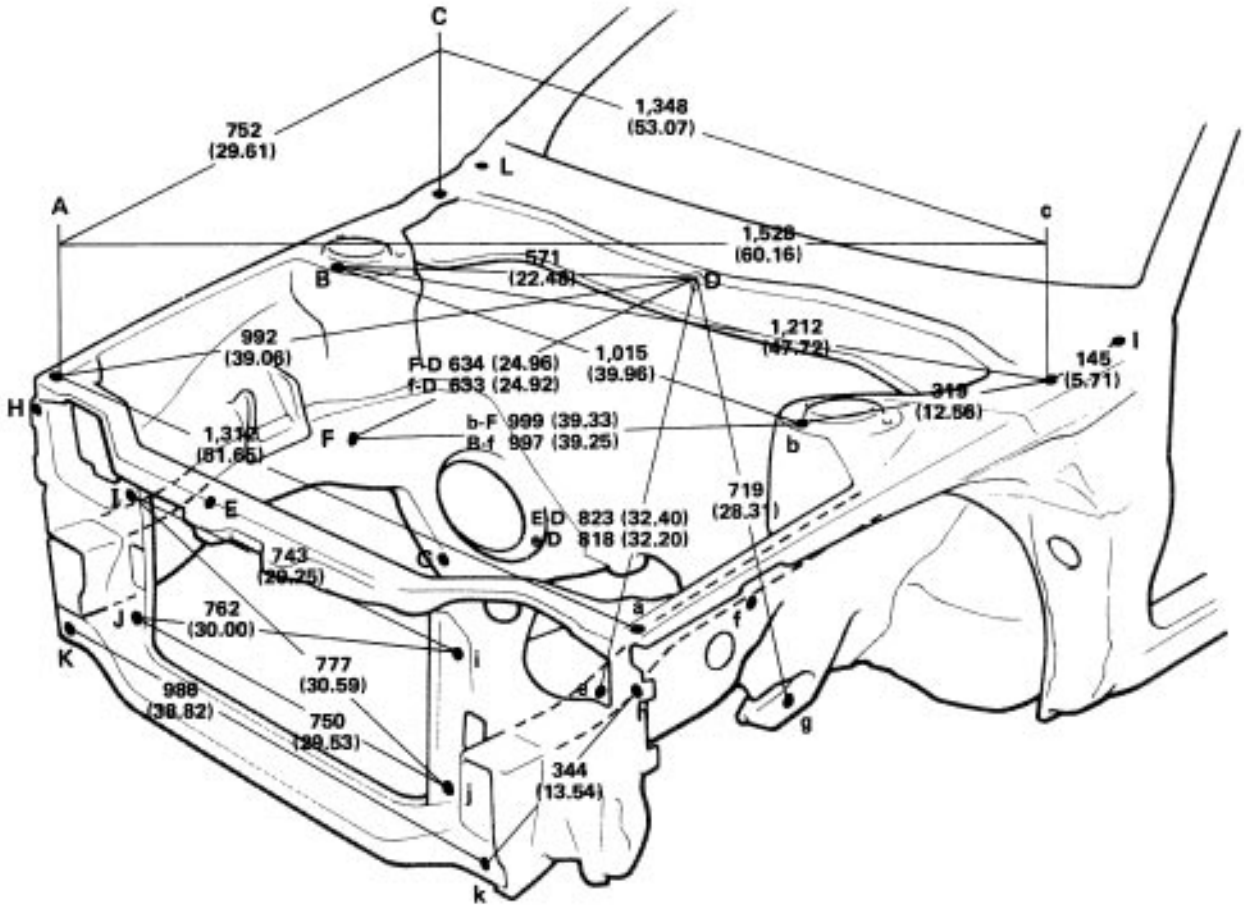

mm (in.)

Symbol	Name	Hole diam.
A, a	Fender installation nut – front	6 (0.24) nut
B, b	Front spring support hole – front	9.5 (0.37)
C, c	Fender installation nut – rear	6 (0.24) nut
D	Cowl top panel center mark	—
E, e	Front side member standard hole	16 (0.63)
F, f	Front side member standard hole	16 (0.63)
G, g	Front side member standard hole	10 (0.39)
H, h	Radiator support standard hole	10 (0.39)
I, i	Wire harness clamp hole	7 (0.28)
J, j	Oil cooler pipe installation nut	6 (0.24) nut
K, k	Front crossmember standard hole	7 (0.28)
L, l	Cowl top panel standard hole	10 (0.39)

BO2459

UNDER BODY (2WD)

(Three-dimensional Distance)

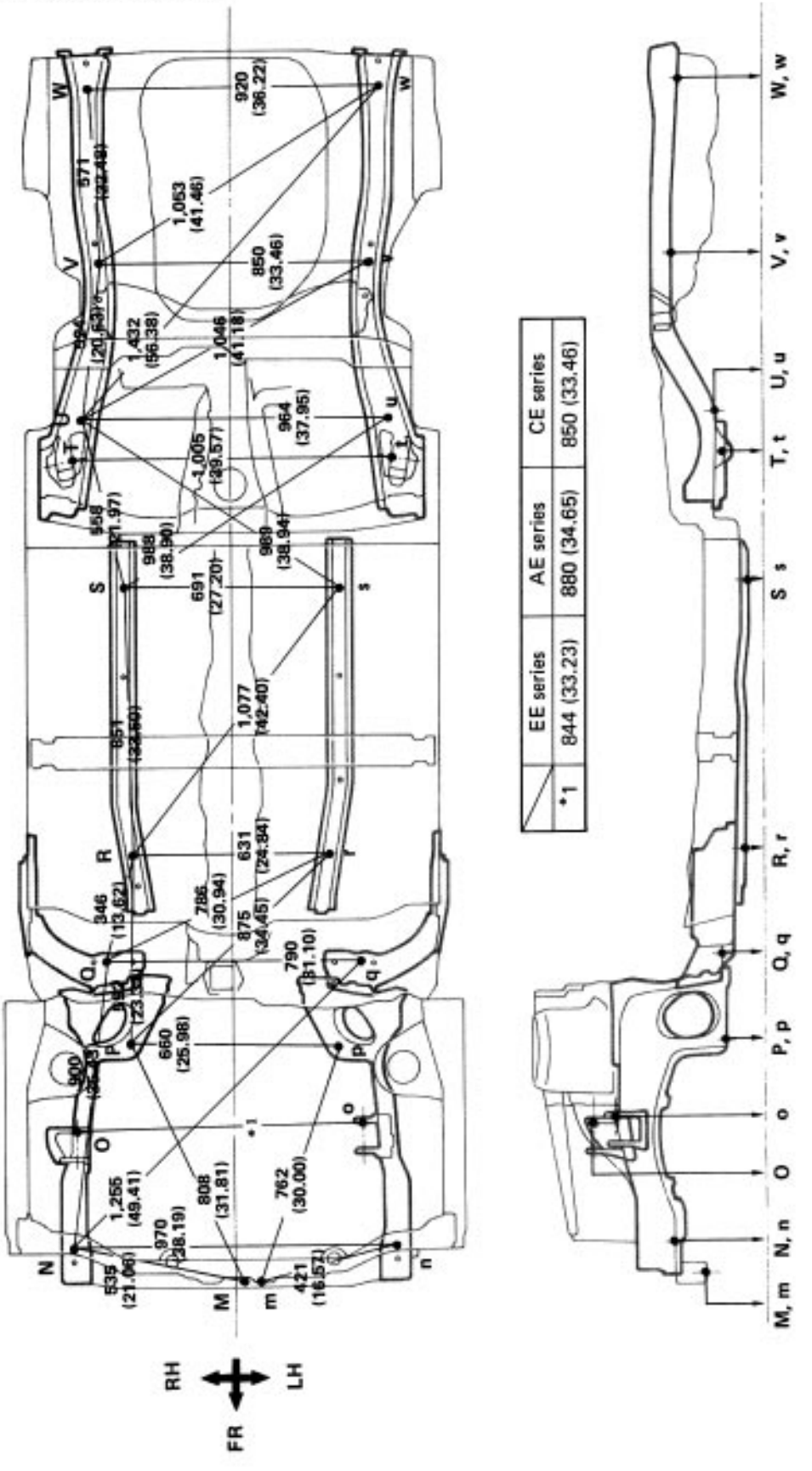

	EE series	AE series	CE series
*1	844 (33.23)	880 (34.65)	850 (33.46)

mm (in.)

Symbol	Name	Hole diam.	Symbol	Name	Hole diam.
M, m	Engine mounting member installation nut	10 (0.39) nut	S, s	Front floor under reinforcement standard hole	15 (0.59)
N, n	Front side member standard hole	15 (0.59)	T, t	Strut bar installation hole – inner	12 (0.47)
O, o	Engine mounting bracket hole – rear	13 (0.51)	U, u	Rear floor side member standard hole	15 (0.59)
P, p	Front suspension crossmember installation nut	14 (0.55) nut	V, v	Rear suspension member installation hole	10 (0.39) nut
Q, q	Front suspension crossmember installation nut	12 (0.47) nut	W, w	Rear floor side member standard hole	13 (0.51)
R, r	Front floor under reinforcement standard hole	15 (0.59)	—	—	—

BO2460
BO2461

UNDER BODY (2WD)

(Two-dimensional Distance)

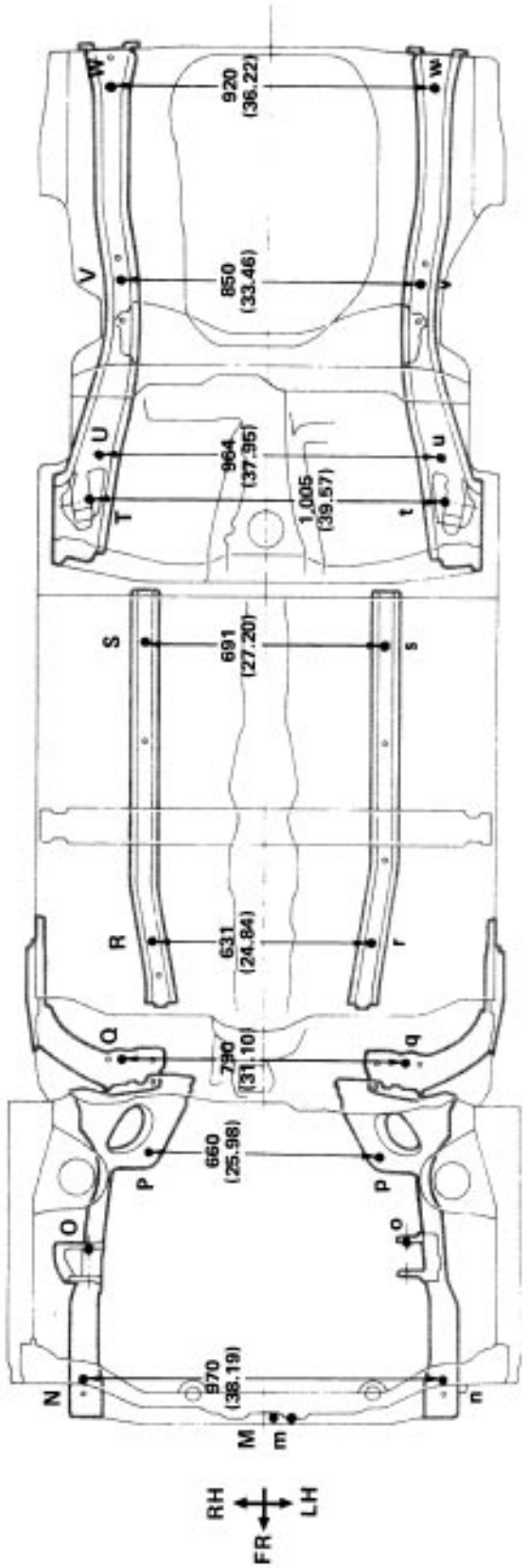

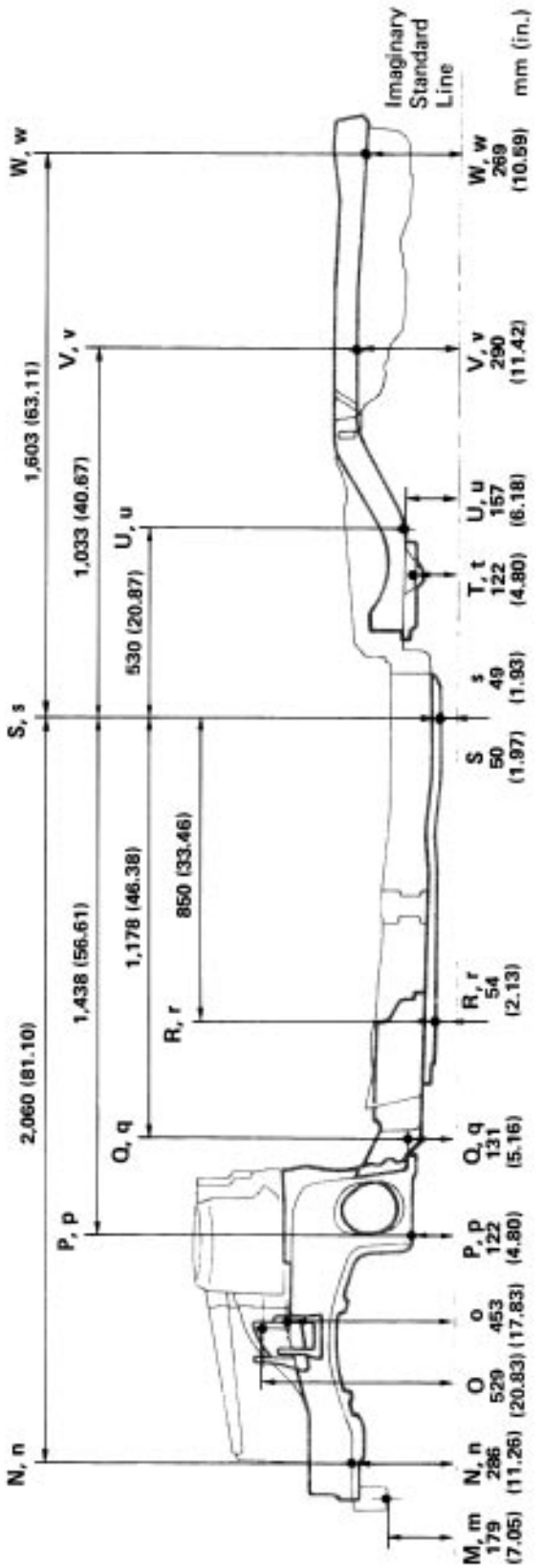

Wheel base	2,430 (95.67)

This imaginary standard line is under 100 mm (3.94 in.) from the rocker panel bottom surface.

BO2460
BO2461

UNDER BODY (4WD)

(Three-dimensional Distance)

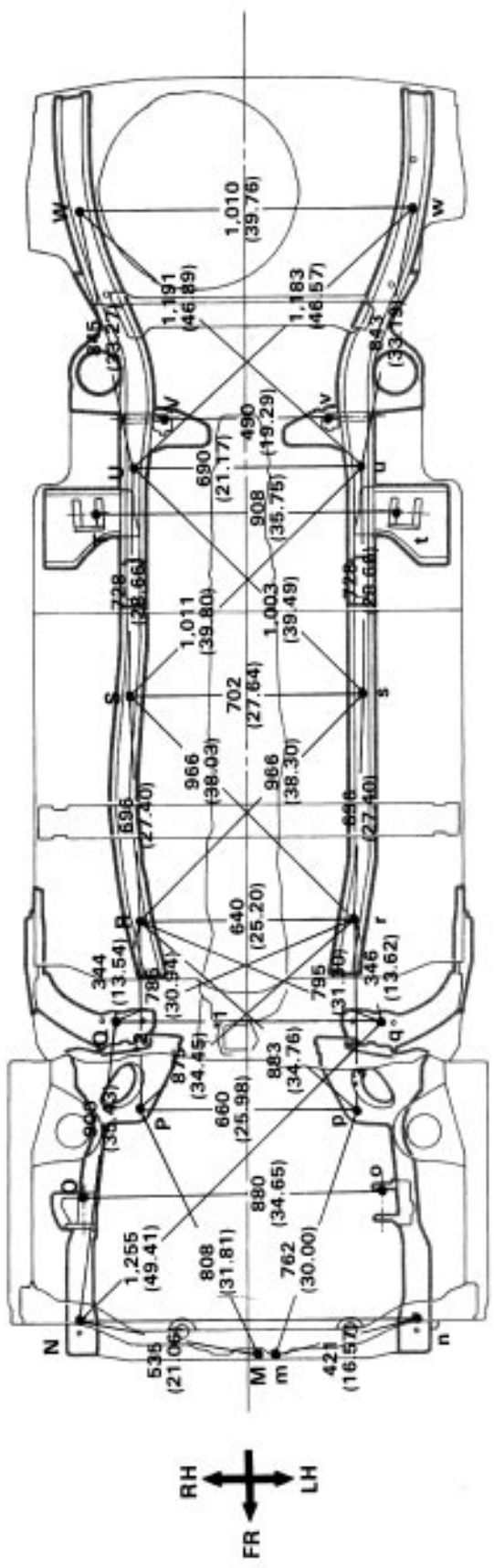

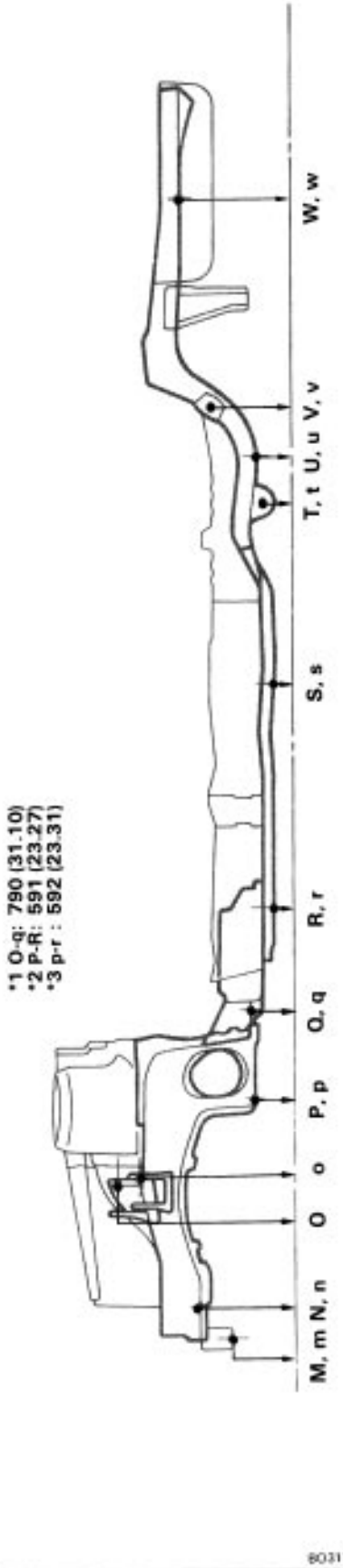

*1 O-q: 790 (31.10)
*2 P-R: 591 (23.27)
*3 p-r : 592 (23.31)

mm (in.)

Symbol	Name	Hole diam.	Symbol	Name	Hole diam.
M, m	Engine mounting member installation nut	10 (0.39) nut	S, s	Front floor under reinforcement standard hole	15 (0.59)
N, n	Front side member standard hole	15 (0.59)	T, t	Strut bar installation hole — inner	12 (0.47)
O, o	Engine mounting bracket hole — rear	13 (0.51)	U, u	Rear floor side member standard hole	15 (0.59)
P, p	Front suspension crossmember installation nut	14 (0.55) nut	V, v	Rear suspension member installation hole	10 (0.39) nut
Q, q	Front suspension crossmember installation nut	12 (0.47) nut	W, w	Rear floor side member standard hole	15 (0.59)
R, r	Front floor under reinforcement standard hole	15 (0.59)	—	—	—

BO3110B03111

UNDER BODY (4WD)

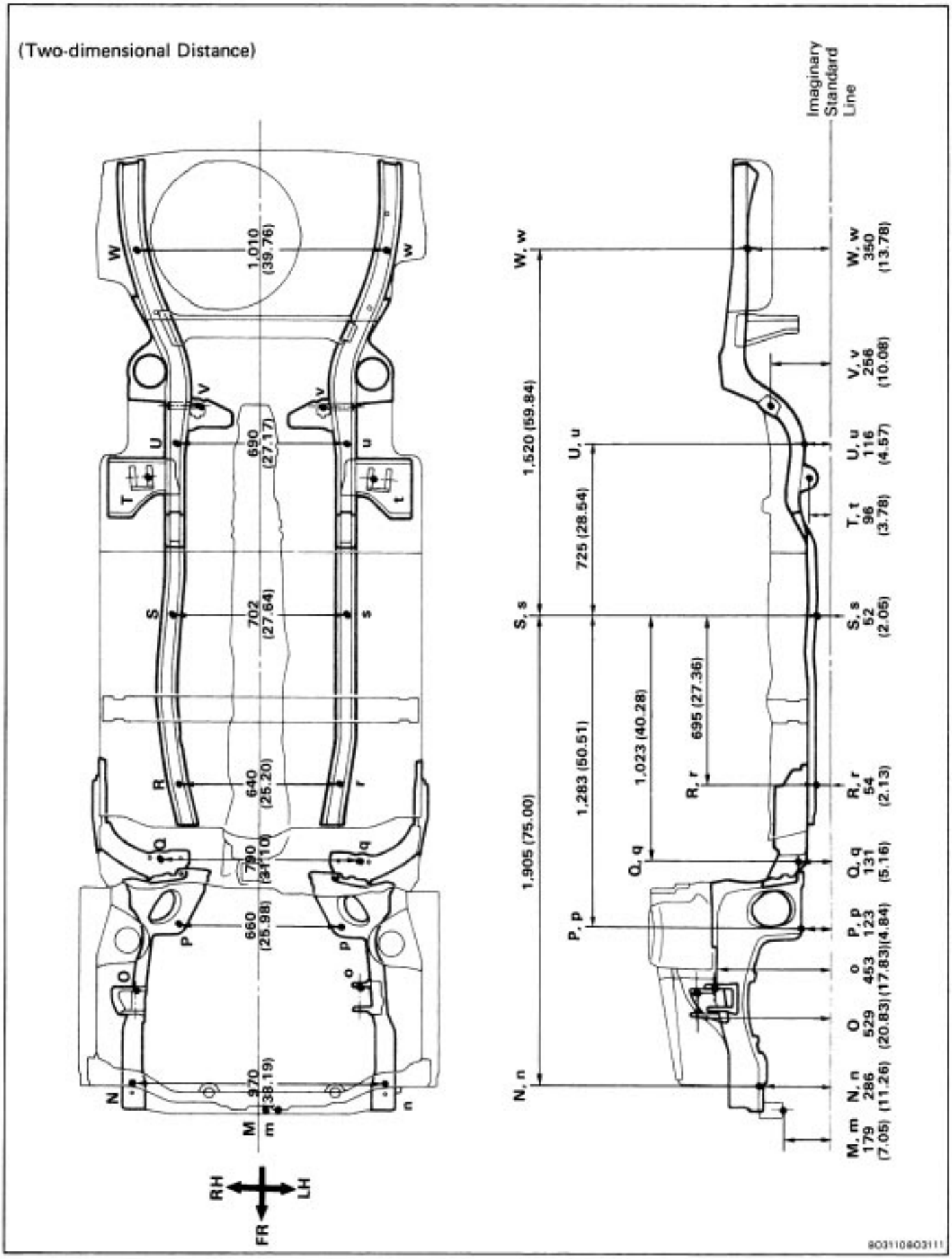

LUGGAGE COMPARTMENT (Sedan and Coupe)

(Three-dimensional Distance)

SEDAN

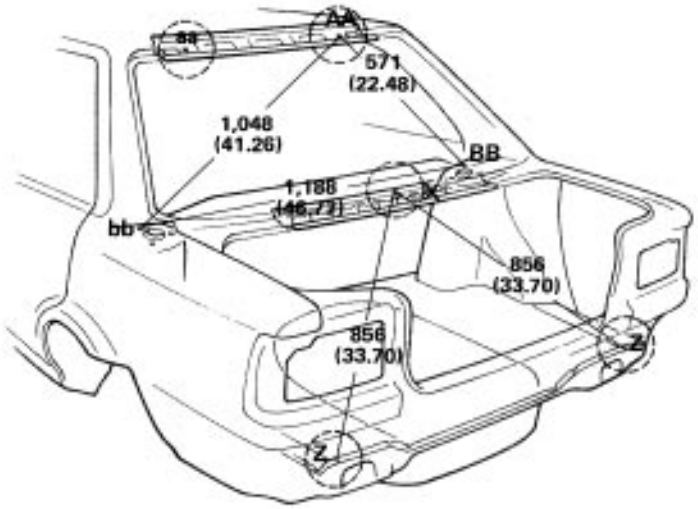

AA, aa points



X point

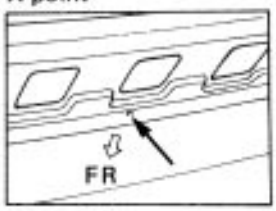

Z, z points

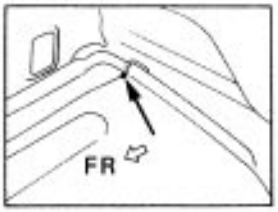

COUPE

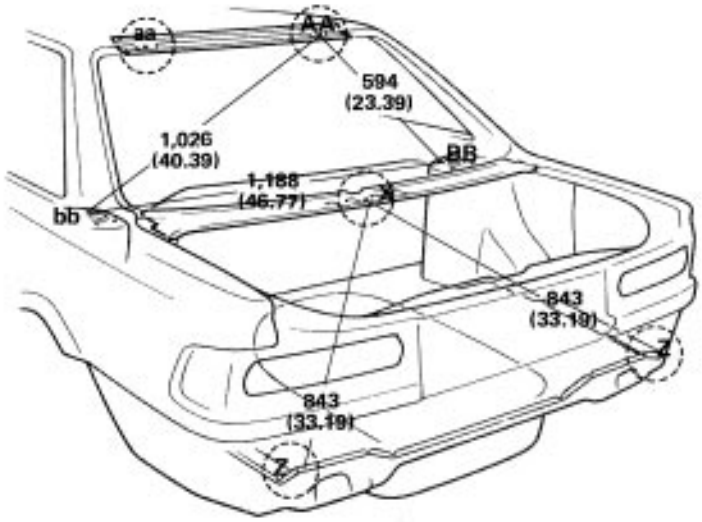

AA, aa points



X point

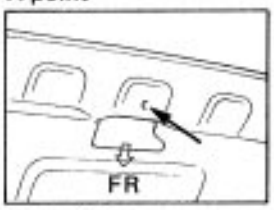

Z, z points

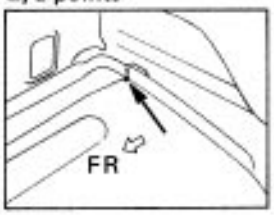

mm (in)

Symbol	Name	Hole diam.
X	Upper back reinforcement center mark	2.5R (0.10R)
Z, z	Rear floor pan – rear edge	——
AA, aa	Back window upper frame standard hole – rear edge	13 (0.51)
BB, bb	Rear spring support hole – front	9 (0.35)

BO2466
BO2467

LUGGAGE COMPARTMENT (Wagon)

(Three-dimensional Distance)

FWD WAGON

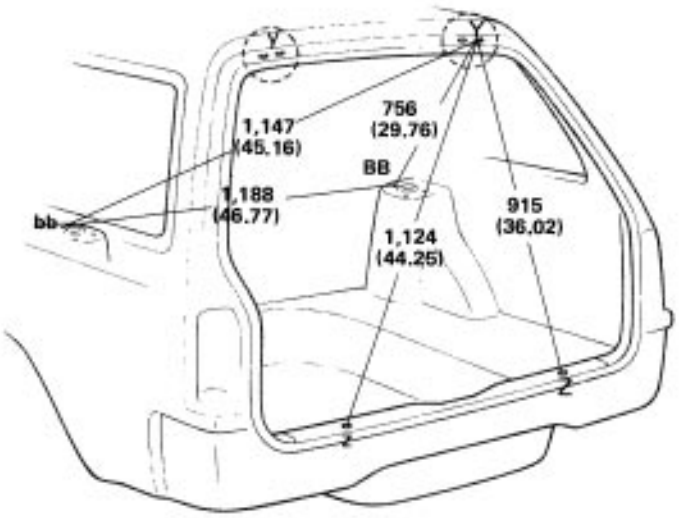

Y, y points

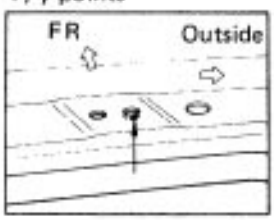

mm (in.)

Symbol	Name	Hole diam.
Y, y	Back door installation hole – Outer, rear edge	15 (0.59)
Z, z	Lower back panel standard hole	9 (0.35)
BB, bb	Rear spring support hole – front	9 (0.35)

ALL-TRACK/4WD WAGON

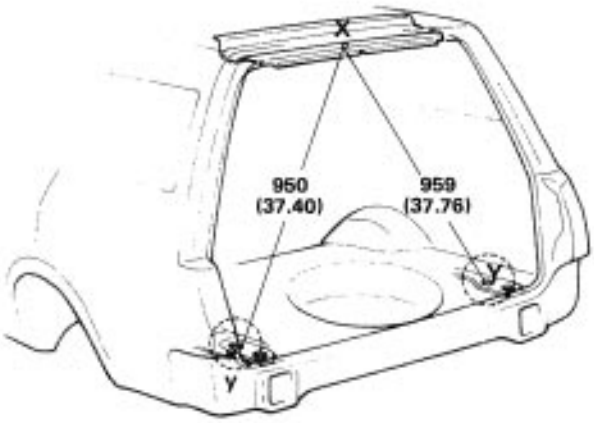

X point

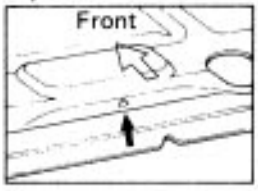

Y, y points

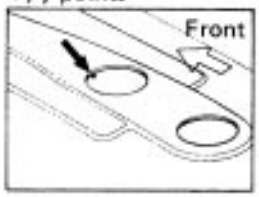

mm (in.)

Symbol	Name	Hole diam.
X	Back door opening frame center mark	1.5 R (0.06 R)
Y, y	Rear floor pan bumper installation hole – front	50 (1.97)

BO2470
BO3112

BRAKE SYSTEM

PRECAUTIONS

1. Care must be taken to replace each part properly as it could affect the performance of the brake system and result in a driving hazard. Replace the parts with parts of the same part number or equivalent.
2. It is very important to keep parts and the area clean when repairing the brake system.

TROUBLESHOOTING

Problem	Possible cause	Remedy	Page
Low or spongy pedal	Linings worn	Replace brake shoes or pads	BR–16, 22, 30
	Leak in brake system	Repair leak	
	Master cylinder faulty	Repair or replace master cylinder	BR–9
	Air in brake system	Bleed brake system	BR–7
	Wheel cylinder faulty	Repair wheel cylinder	BR–22
	Piston seals worn or damaged	Repair brake calipers	BR–16, 30
	Rear brake automatic adjuster faulty	Repair or replace adjuster	BR–22
Brakes drag	Parking brake out of adjustment	Adjust parking brake	BR–8
	Linkage binding	Repair as necessary	
	Booster push rod out of adjustment	Adjust push rod	BR–15
	Return spring faulty	Replace spring	BR–22
	Brake line restricted	Repair as necessary	
	Lining cracked or distorted	Replace brake shoes and pads	BR–16, 22, 30
	Wheel cylinder or caliper piston sticking	Repair as necessary	BR–16, 22 30
	Automatic adjuster broken	Replace adjuster	BR–22
	Master cylinder faulty	Repair or replace master cylinder	BR–9
Brakes pull	Tires improperly inflated	Inflate tires to proper pressure	
	Oil or grease on linings	Check for cause/Replace shoes	BR–22
	Brake shoes distorted, linings worn or glazed	Replace brake shoes	BR–22
	Drum or disc out of round	Replace drum or disc	BR–16, 22, 30
	Return spring faulty wheel cylinder faulty	Replace spring	BR–22
	Piston frozen in caliper	Repair wheel cylinder	BR–22
	Disc brake pads sticking	Repair caliper	BR–16, 30
		Replace pads	BR–16, 30
Brakes grab/chatter	Oil or grease on linings	Check for cause/Replace shoes	BR–22
	Drum or disc scored or out of round	Replace drum or disc	BR–16, 22, 30
	Brake shoes distorted, linings worn or glazed	Replace brake shoes	BR–22
	Wheel cylinder faulty	Repair wheel cylinder	BR–22
	Disc brake pads sticking	Replace pads	BR–16, 30
	Brake booster faulty	Repair booster	BR–14

TROUBLESHOOTING (Cont'd)

Problem	Possible cause	Remedy	Page
Hard pedal but brakes inefficient	Oil or grease on linings	Check for cause/Replace shoes	BR–16, 22, 30
	Brake shoes distorted, linings worn or glazed, drums worn	Replace brake shoes	BR–22
	Disc brake pads worn	Replace pads	BR–16, 30
	Piston frozen in caliper	Repair caliper	BR–16, 30
	Brake booster faulty	Repair booster	BR–14
	Brake line restricted	Repair as necessary	
	Vacuum system leaking	Repair or replace	
Snapping or clicking noise when brakes are applied	Drum brakes–brake shoes binding at backing plate ledges	Lubricate	BR–22
	Drum brakes–backing plate ledges worn	Replace and lubricate ledges	BR–22
	Drum brakes–loose or missing hold down spring	Replace or hook in	BR–22
	Drum brakes–loose set bolt at backing plate	Tighten	BR–22
	Disc brakes–rust on front edge of inboard pad	Inspect, lubricate/Replace if necessary	BR–16, 30
	Disc brakes–loose or missing pad support plate	Replace or insert	BR–16, 30
	Disc brakes–loose installation bolt	Tighten	BR–16, 30
	Disc brakes–wear on slide bushing	Replace	BR–16,30
	Pad wear and pad wear indicator making contact with the rotor	Replace	BR–16, 30
Scraping or grinding noise when brakes are applied	Worn brake linings	Replace/Refinish drums or rotors if heavily scored	BR–16, 22, 30
	Caliper to wheel or rotor interference	Replace as required	BR–16, 22, 30
	Dust cover to rotor or drum interference	Correct or replace	
	Other brake system components:	Inspect and repair	BR–16, 30
	Warped or bent brake backing plate or splash shield, cracked drums or rotors		
	Tires rubbing against chassis and body	Inspect and repair	
	Pad wear and pad wear indicator making contact with the rotor	Replace	BR–16, 30

TROUBLESHOOTING (Cont'd)

Problem	Possible cause	Remedy	Page
Squealing, groaning or chattering noise when brakes are applied NOTE: Brake friction materials inherently generate noise and heat in order to dissipate energy. As a result, occasional squeal is normal and is aggravated by severe environmental conditions such as cold, heat, wetness, snow, salt, mud, etc. This occasional squeal is not a functional problem and does not indicate any loss of brake effectiveness	Brake drums and linings, rotors and pads worn or scored	Inspect, repair or replace	BR–16,30
	Disc brakes–missing or damaged brake pad anti–squeal shim	Replace Clean or deburr	BR–16, 30
	Disc brakes–burred or rusted calipers	Clean or replace	BR–16,30
	Dirty, greased, contaminated or glazed linings		BR–16, 22, 30
	Improper lining parts	Check for correct parts/Replace	BR–16, 22, 30
	Maladjustment of brake pedal or booster push rod	Inspect and adjust	BR–6, 15
	Drum brakes–weak damaged or incorrect shoe hold–down springs, loose or damaged shoe hold–down pins and springs and grooved backing plate ledges	Inspect, repair or replace	BR–22
Squealing noise when brakes are not applied	Bent or warped backing plate causing interference with drum	Repair or replace	BR–22
	Improper machining of drum causing interference with backing plate or shoe	Replace drum	BR–22
	Maladjustment of brake pedal or booster push rod	Inspect and adjust	BR–6, 15
	Poor return of brake booster or master cylinder or wheel cylinder	Inspect, repair or replace	BR–9, 14, 16,22
	Disc brakes–rusted, stuck	Inspect/Lubricate if necessary	BR–16, 30
	Other brake system components: Loose or extra parts in brakes Rear drum adjustment too tight causing lining to glaze	Inspect, repair, replace as required	BR–16, 22 30
	worn, damaged or insufficiently lubricated wheel bearings		SA–8, 23, 31
	Drum brakes–weak, damaged or incorrect shoe retracting springs	Inspect, repair or replace	BR–22
	Drum brakes–grooved backing plate ledges		BR–22
	Improper positioning of pads in caliper	Inspect and repair	BR–16, 30
	Outside diameter of rotor rubbing caliper housing	Inspect, correct or replace	BR–16, 30
	Housing installation of disc brake pad support plate	Correct	BR–16, 30

TROUBLESHOOTING (Cont'd)

Problem	Possible cause	Remedy	Page
Groaning, clicking or ratting noise when brakes are not applied	Stones or foreign material trapped inside wheel covers	Remove stones, etc.	
	Loose wheel nuts	Tighten to correct torque/Replace if stud holes are elongated	
	Disc brakes–failure of shim	Inspect/Replace if necessary	BR–16, 30
	Disc brakes–wear on slide bushing	Inspect/Replace if necessary	BR–16, 30
	Disc brakes–loose installation bolt	Inspect/Tighten if necessary	BR–16, 30
	Maladjustment of brake pedal or booster push rod	Inspect and adjust	BR–6,15
	Disc brakes–poor return of piston	Inspect, repair or replace	BR–16,30
	Drum brakes–loose or extra parts	Inspect, remove or repair	BR–22
	Worn, damaged or dry wheel bearings	Inspect, lubricate or replace	SA–8, 34, 42

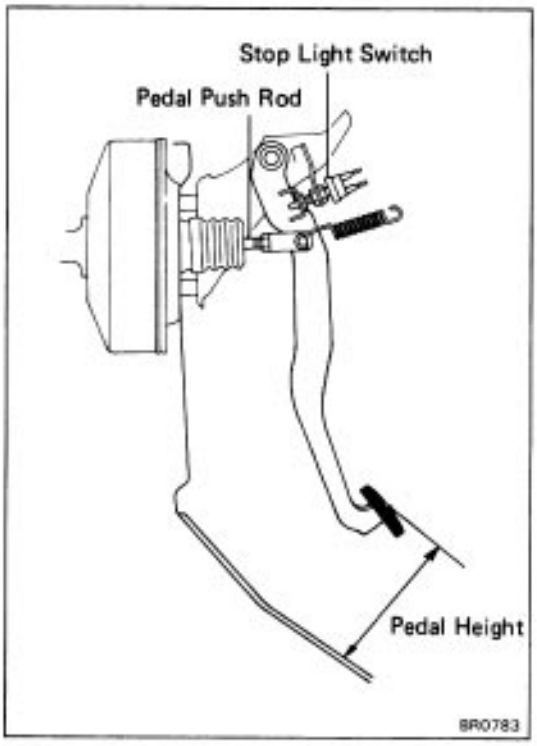

CHECKS AND ADJUSTMENTS

CHECK AND ADJUSTMENT OF BRAKE PEDAL

1. CHECK THAT PEDAL HEIGHT IS CORRECT, AS SHOWN

Pedal height from asphalt sheet:
139 – 149 mm (5.47 – 5.87 in.)

2. IF NECESSARY, ADJUST PEDAL HEIGHT

(a) Sufficiently loosen the stop light switch.
(b) Adjust the pedal height by turning the pedal push rod.
(c) Return the stop light switch until it lightly contacts the pedal stopper.
(d) After adjusting the pedal height, check and adjust the pedal freeplay.

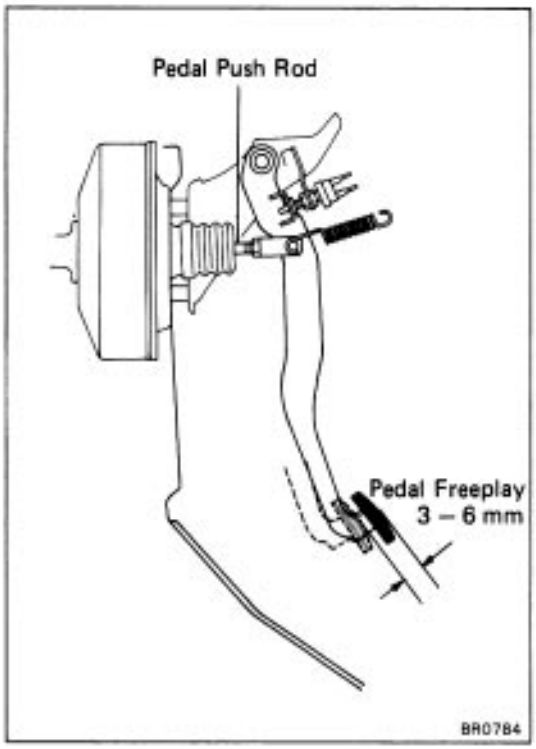

3. CHECK THAT PEDAL FREEPLAY IS CORRECT, AS SHOWN

(a) Stop the engine and depress the brake pedal several times until there is no more vacuum left in the booster.
(b) Push in the pedal until the beginning of resistance is felt. Measure the distance, as shown.

Pedal freeplay: 3 – 6 mm (0.12 – 0.24 in.)

HINT: The pedal freeplay is the amount of the stroke until the booster air valve is moved by the pedal push rod.

4. IF NECESSARY, ADJUST PEDAL FREEPLAY

(a) If incorrect, adjust the pedal freeplay by turning the pedal push rod and tighten the clevis lock nut.

Torque: 260 kg–cm (19 ft–lb, 25 N–m)

(b) Start the engine and confirm that pedal freeplay exists.
(c) After adjusting the pedal freeplay, check the pedal height.

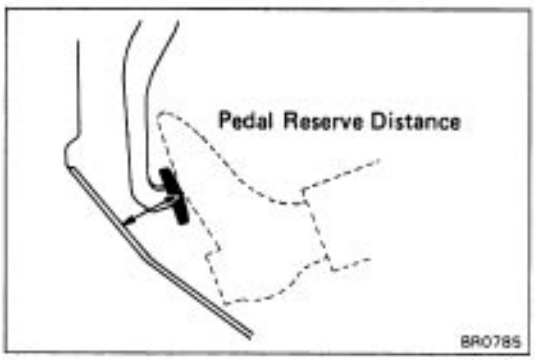

5. CHECK THAT PEDAL RESERVE DISTANCE IS CORRECT, AS SHOWN

Release the parking brake lever.
With engine running, depress the pedal and measure the pedal reserve distance, as shown.

Pedal reserve distance from asphalt sheet at 50 kg (110.2 lb, 490 N):

Rear drum brake type More than 55 mm (2.17 in.)
Rear disc brake type More than 60 mm (2.36 in.)
4WD More than 65 mm (2–56 in.)

If incorrect,troubleshoot the brake system.

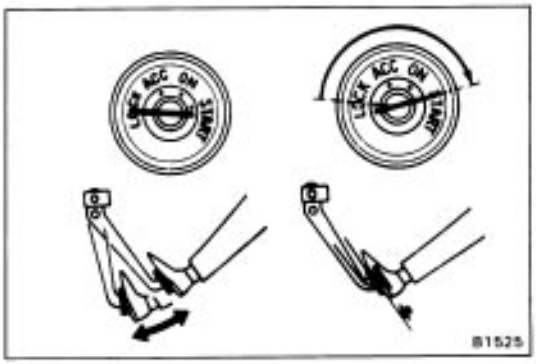

OPERATIONAL TEST OF BRAKE BOOSTER

HINT: If available, use a brake booster tester to check the booster operating condition.

1. OPERATING CHECK

(a) Depress the brake pedal several times with the engine off, and check that there is no change in the pedal reserve distance.

(b) Depress the brake pedal and start engine. If the pedal goes down slightly, operation is normal.

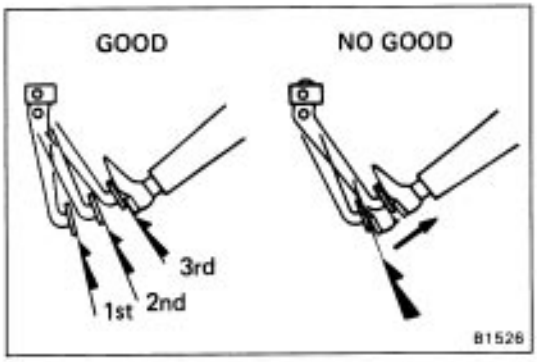

2. AIR TIGHTNESS

(a) Start the engine and stop it after one or two minutes. Depress the brake pedal several times slowly. If the pedal goes down deepest the first time, but gradually rises after the second or third time, the booster is air tight.

(b) Depress the brake pedal while the engine is running, and stop the engine with the pedal depressed. If there is no change in pedal reserve travel after holding the pedal for thirty seconds, the booster is air tight.

BLEEDING OF BRAKE SYSTEM

HINT: If any work is done on the brake system or if air is suspected in the brake lines, bleed the system of air.

NOTICE: Do not let brake fluid remain on a painted surface. Wash it off immediately.

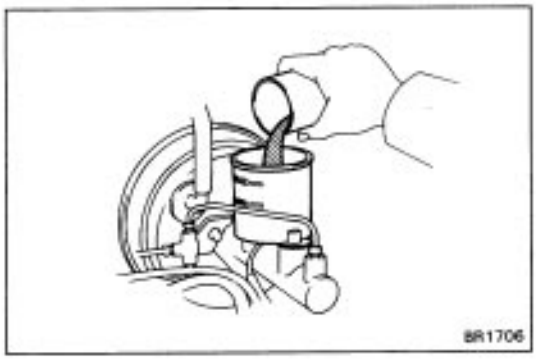

1. FILL BRAKE RESERVOIR WITH BRAKE FLUID

Check the reservoir after bleeding each wheel. Add fluid, if necessary.

2. BLEED MASTER CYLINDER

HINT: If the master cylinder was disassembled or if the reservoir tank becomes empty, bleed the air from the master cylinder.

(a) Disconnect the brake tubes from the master cylinder. Use a container to catch the brake fluid.

(b) Slowly depress the brake pedal and hold it.

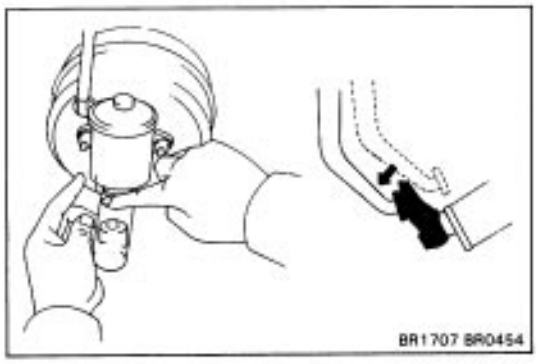

(c) Block off the outlet plug with your finger, and release the brake pedal.

(d) Repeat (b) and (c) three or four times.

(e) Connect the brake tubes to the master cylinder.

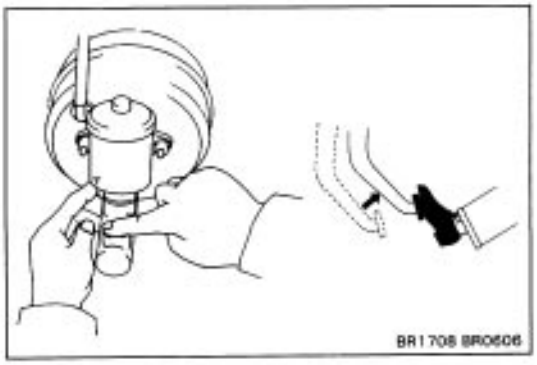

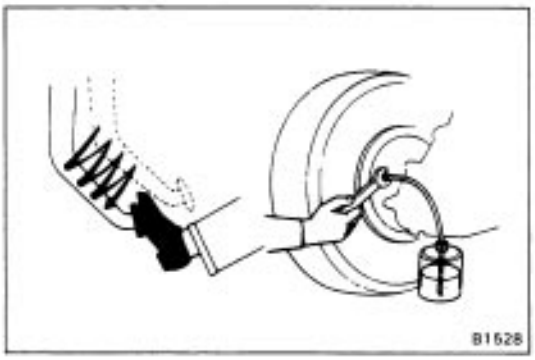

3. CONNECT VINYL TUBE TO WHEEL CYLINDER BLEEDER PLUG

Insert other end of the tube in a half–full container of brake fluid.

HINT: Begin air bleeding from the wheel cylinder with the longest hydraulic line.

4. BLEED BRAKE LINE

(a) Slowly pump the brake pedal several times.

(b) While an assistant depresses the pedal, loosen the bleeder plug until fluid starts to run out. Then close the bleeder plug.

(c) Repeat this procedure until there are no more air bubbles in the fluid.

Bleeder plug tightening torque: 85 kg–cm (74 in.–lb, 8.3 N –m)

5. REPEAT PROCEDURE FOR EACH WHEEL

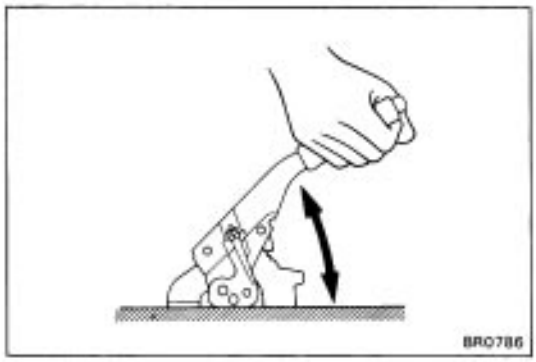

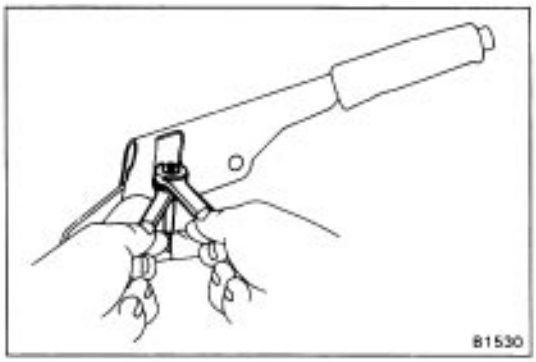

CHECK AND ADJUSTMENT OF PARKING BRAKE

1. CHECK THAT PARKING BRAKE LEVER TRAVEL IS CORRECT

Pull the parking brake lever all the way up, and count the number of clicks.

Parking brake lever travel at 20 kg (44.1 lb, 196 N)

Rear drum brake type 4 – 7 clicks

Rear disc brake type 5 – 8 clicks

2. IF NECESSARY, ADJUST PARKING BRAKE

HINT: Before adjusting the parking brake, make sure that the rear brake shoe clearance has been adjusted.

For shoe clearance adjustment, see steps 8 and 9 on page BR–29 and step 9 on page BR–39.

(a) Remove the console box.

(b) Loosen the lock nut and turn the adjusting nut until the travel is correct.

(c) Tighten the lock nut and install the console box.

Torque: 55 kg–cm (48 in.–lb, 5.4 N–m)

MASTER CYLINDER

REMOVAL OF MASTER CYLINDER

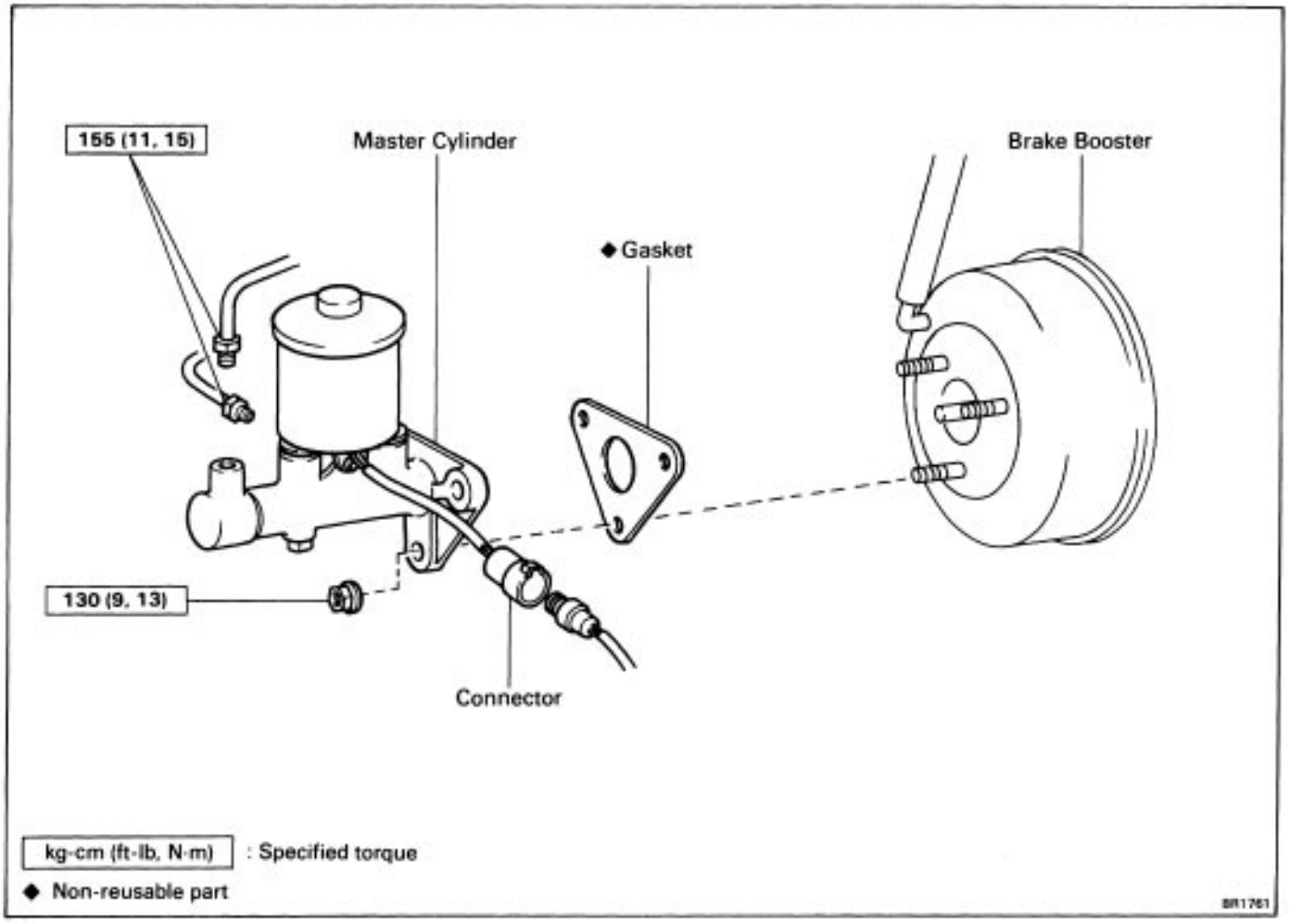

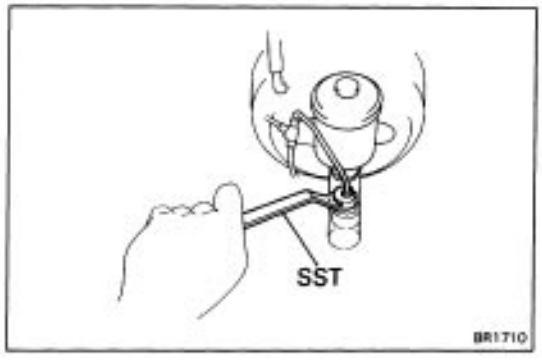

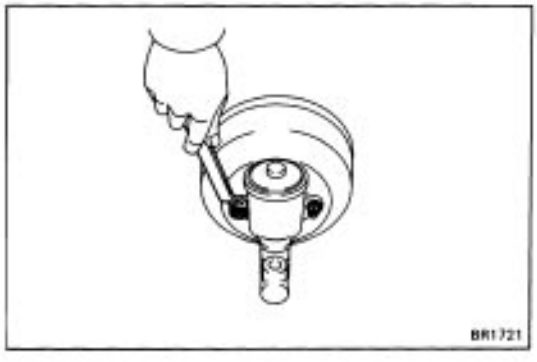

1. DISCONNECT LEVEL WARNING SWITCH CONNECTOR

2. DRAW OUT FLUID WITH SYRINGE

NOTICE: Do not let brake fluid remain on a painted surface. Wash it off immediately.

3. DISCONNECT BRAKE TUBES

Using SST, disconnect the brake tubes from the master cylinder.
SST 09751–36011

4. REMOVE MASTER CYLINDER

Remove the mounting nuts and pull out the master cylinder and gasket.

COMPONENTS

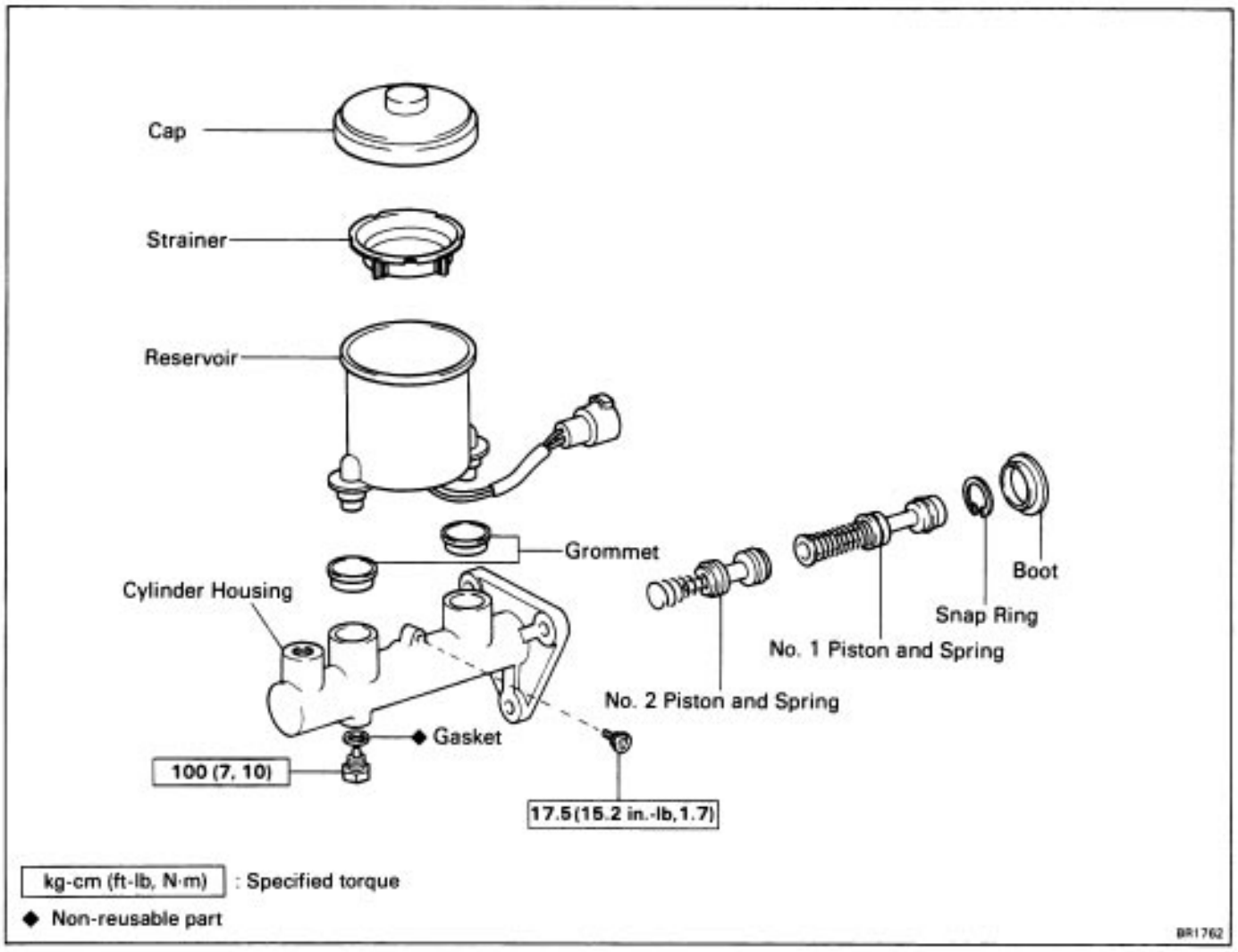

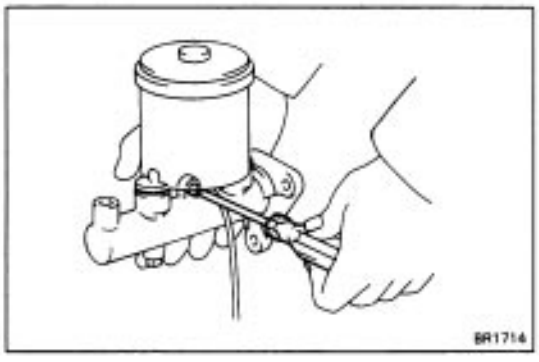

DISASSEMBLY OF MASTER CYLINDER

1. REMOVE RESERVOIR

(a) Remove the set screw and pull out the reservoir.

(b) Remove the cap and strainer from the reservoir.

2. REMOVE TWO GROMMETS

3. PLACE CYLINDER IN VISE

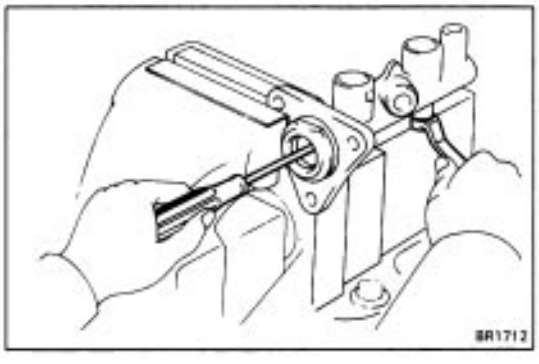

4. REMOVE PISTON STOPPER BOLT

Using a screwdriver, push the pistons in all the way and remove the piston stopper bolt and gasket.

HINT: Tape the screwdriver tip before use.

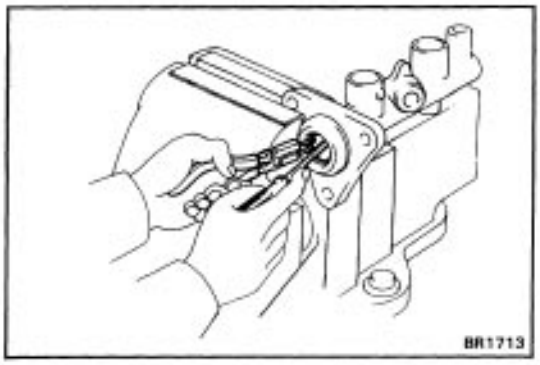

5. REMOVE TWO PISTONS AND SPRINGS

(a) Push in the piston with a screwdriver and remove the snap ring with snap ring pliers.

(b) Remove the No. 1 piston and spring by hand, pulling straight out, not at an angle.

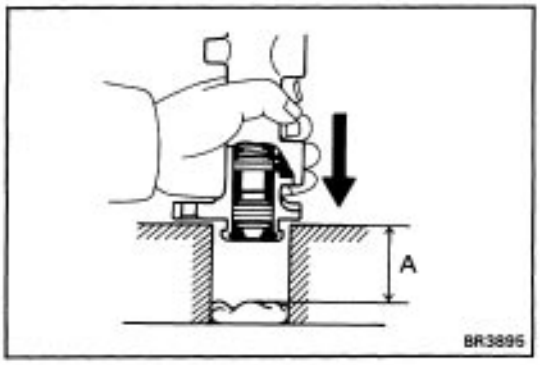

(c) Place a rag and two wooden blocks on the work table and lightly tap the cylinder flange against the block edges until the No.2 piston drops out of cylinder.

HINT: Make sure the distance (A) from the rag to the top of the blocks is at least 100 mm (3.94 in.).

INSPECTION OF MASTER CYLINDER COMPONENTS

HINT: Clean the disassembled parts with compressed air.

1. INSPECT MASTER CYLINDER BORE FOR RUST OR SCORING

2. INSPECT CYLINDER FOR WEAR OR DAMAGE

If necessary, clean or replace the cylinder.

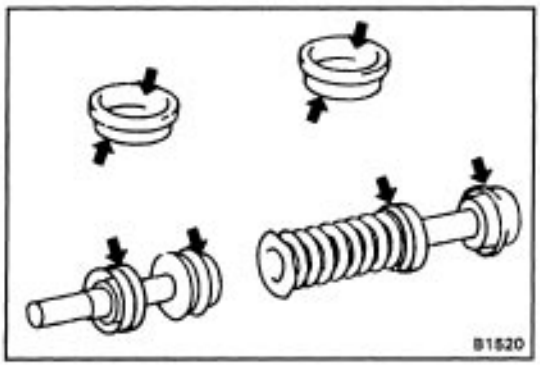

ASSEMBLY OF MASTER CYLINDER

(See page BR–10)

1. APPLY LITHIUM SOAP BASE GLYCOL GREASE TO RUBBER PARTS INDICATED BY ARROWS

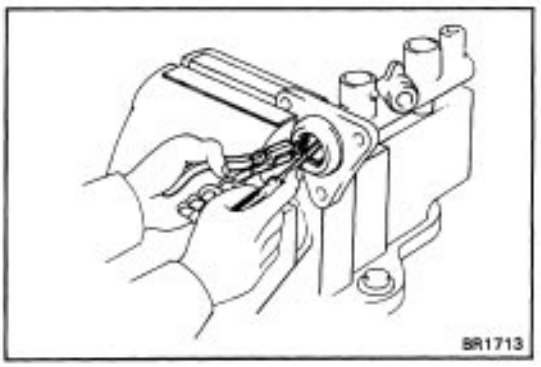

2. INSTALL TWO SPRINGS AND PISTONS

NOTICE: Be careful not to damage the rubber lips on the pistons.

(a) Insert the two springs and pistons straight in, not at an angle.

NOTICE: If inserted at an angle, there is a possibility of damaging the cylinder bore.

(b) Push in the piston with a screwdriver and install the snap ring with snap ring pliers.

HINT: Tape the screwdriver tip before use.

NOTICE: Be careful not to scratch the cylinder bore.

3. INSTALL PISTON STOPPER BOLT

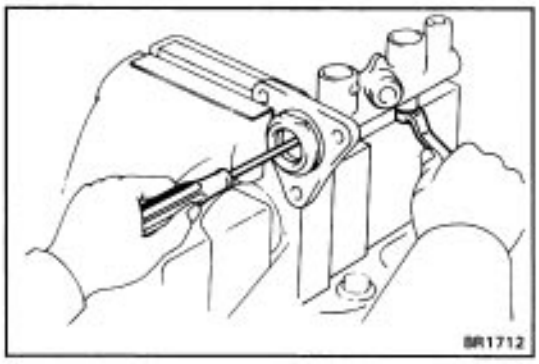

Using a screwdriver, push the piston in all the way and install the piston stopper bolt over the gasket. Torque the bolt.

Torque: 100 kg–cm (7 ft–lb, 10 N–m)

4. INSTALL TWO GROMMETS

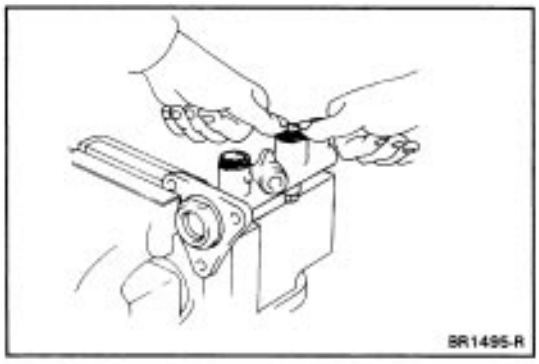

5. INSTALL RESERVOIR

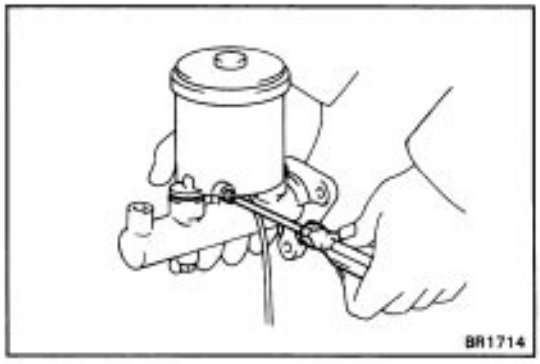

(a) Install the cap and strainer to the reservoir.
(b) Push the reservoir onto the cylinder.
(c) Install the set screw while pushing on the reservoir.

Torque: 17.5 kg–cm (15.2 in.–lb, 1.7 N–m)

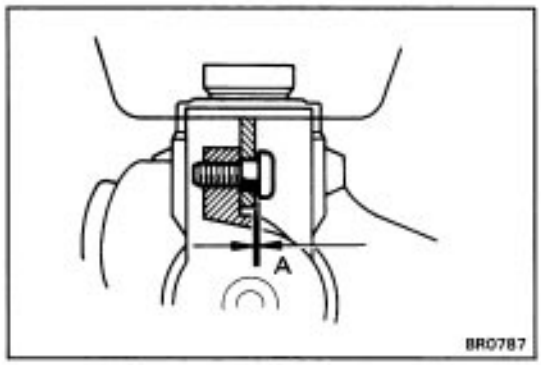

NOTICE: Because the master cylinder and reservoir tank union is a grommet type, the set screw is designed to not separate the reservoir from cylinder and will not tighten down the reservoir. Therefore, there is a clearance at point A. Do not insert washers or an equivalent when tightening.

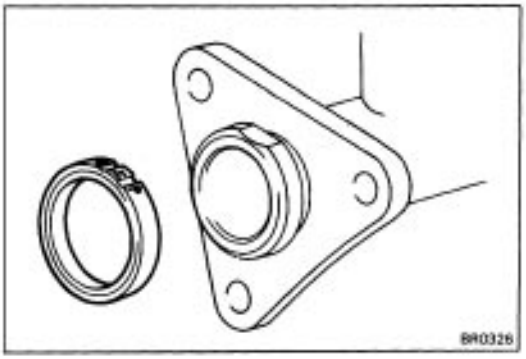

INSTALLATION OF MASTER CYLINDER

(See page BR–9)

1. CLEAN OUT GROOVE ON LOWER INSTALLATION SURFACE OF MASTER CYLINDER

2. CONFIRM THAT ”UP” MARK ON MASTER CYLINDER BOOT IS IN CORRECT POSITION

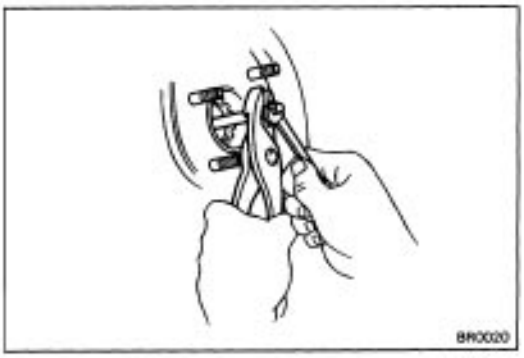

3. ADJUST LENGTH OF BRAKE BOOSTER PUSH ROD BEFORE INSTALLING MASTER CYLINDER

(See page BR–15)

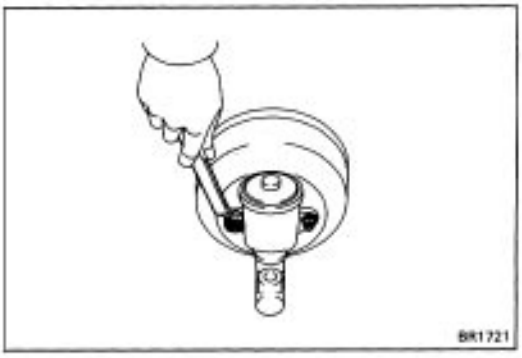

4. INSTALL MASTER CYLINDER

Install the master cylinder and gasket on the brake booster with nuts and install 3–way union.

Torque: 130 kg–cm (9 ft–lb, 13 N–m)

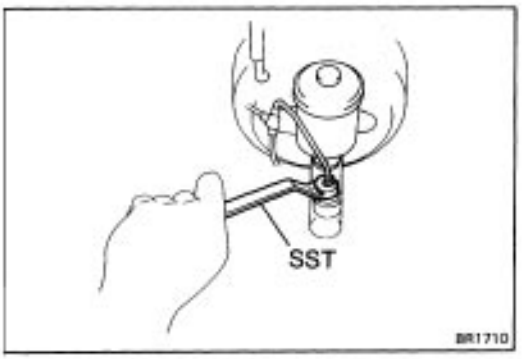

5. CONNECT BRAKE TUBES

Using SST, connect the brake tubes to the master cylinder. Torque the union nuts.

SST 09751–36011

Torque: 155 kg–cm (11 ft–lb, 15 N–m)

6. CONNECT LEVEL WARNING SWITCH CONNECTOR

7. FILL BRAKE RESERVOIR WITH BRAKE FLUID AND BLEED BRAKE SYSTEM

(See page BR–7)

8. CHECK FOR FLUID LEAKAGE

9. CHECK AND ADJUST BRAKE PEDAL

(See page BR–6)

BRAKE BOOSTER

REMOVAL OF BRAKE BOOSTER

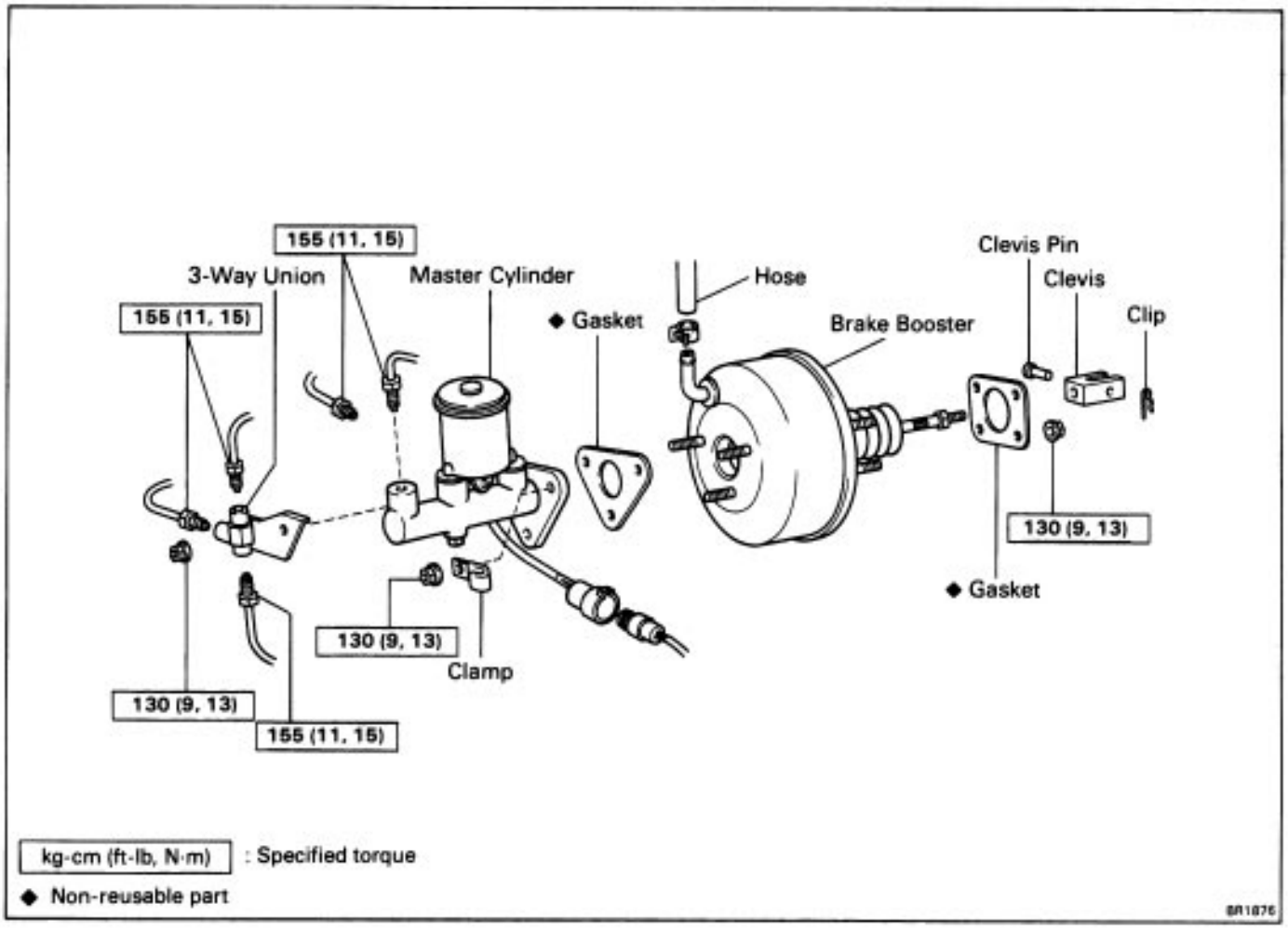

1. REMOVE MASTER CYLINDER
   (See page BR–9)
2. DISCONNECT VACUUM HOSE FROM BRAKE BOOSTER
3. REMOVE PEDAL RETURN SPRING
4. REMOVE CLIP AND CLEVIS PIN

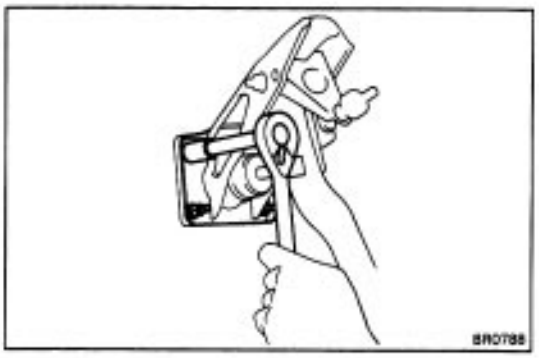

5. REMOVE BRAKE BOOSTER, GASKET AND CLEVIS

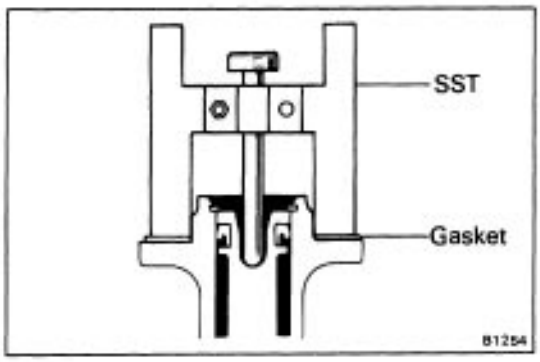

INSTALLATION OF BRAKE BOOSTER

(See page BR–14)

1. ADJUST LENGTH OF BOOSTER PUSH ROD

(a) Install the gasket on the master cylinder.

(b) Set the SST on the gasket, and lower the pin until its tip slightly touches the piston.
SST 09737–00010

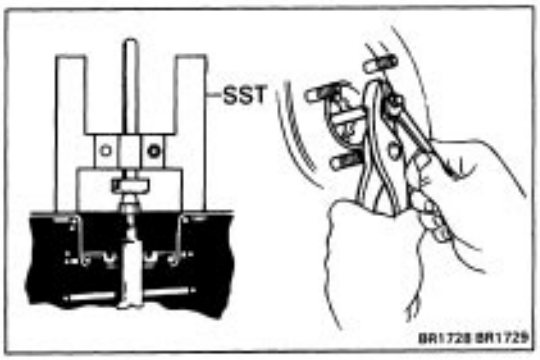

(c) Turn the SST upside down, and set it on the booster.
SST 09737–00010

(d) Measure the clearance between the booster push rod and pin head (SST).
Clearance: 0 mm (0 in.)

(e) Adjust the booster push rod length until the push rod lightly touches the pin head.

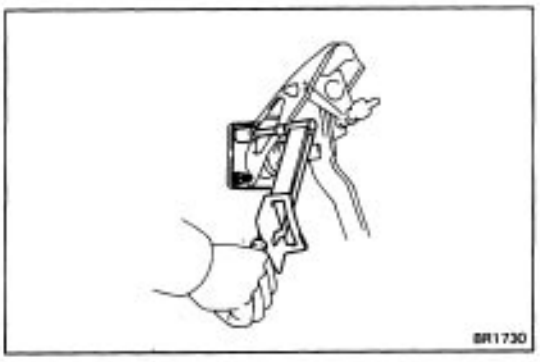

2. INSTALL BRAKE BOOSTER, GASKET AND CLEVIS

(a) Install the booster and gasket.

(b) Install the clevis.

(c) Install and torque the booster mounting nuts.
Torque: 130 kg–cm (9 ft–lb, 13 N–m)

3. CONNECT CLEVIS TO BRAKE PEDAL

Insert the clevis pin into the clevis through the brake pedal and install the clip to the clevis pin.

4. INSTALL PEDAL RETURN SPRING

5. INSTALL MASTER CYLINDER AND 3–WAY UNION
(See page BR–13)

6. CONNECT HOSE TO BRAKE BOOSTER

7. FILL BRAKE RESERVOIR WITH BRAKE FLUID AND BLEED BRAKE SYSTEM (See page BR–7)

8. CHECK FLUID LEAKAGE

9. CHECK AND ADJUST BRAKE PEDAL
(See page BR–6)

10. PERFORM OPERATIONAL CHECK
(See page BR–7)

FRONT BRAKE

COMPONENTS

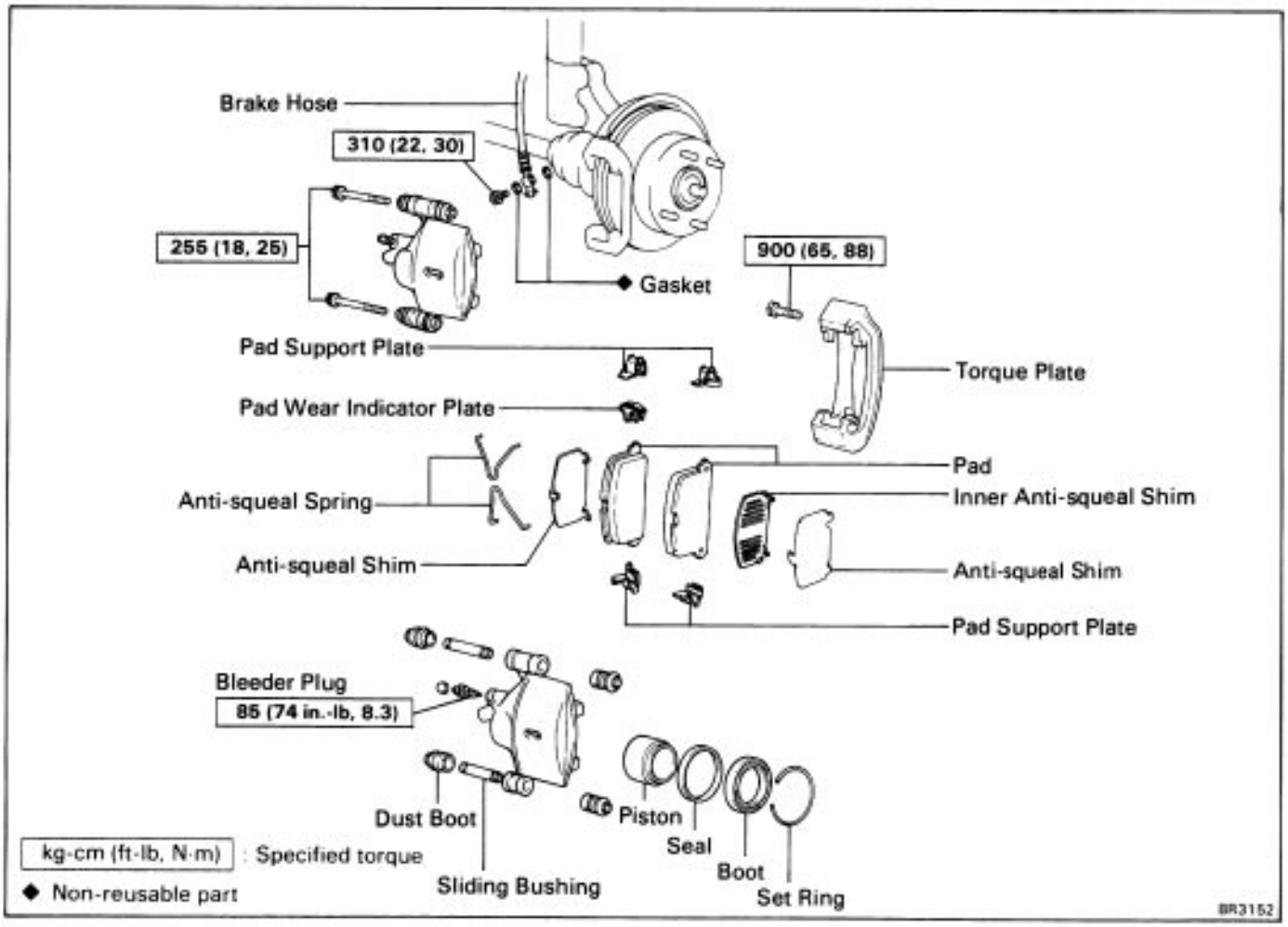

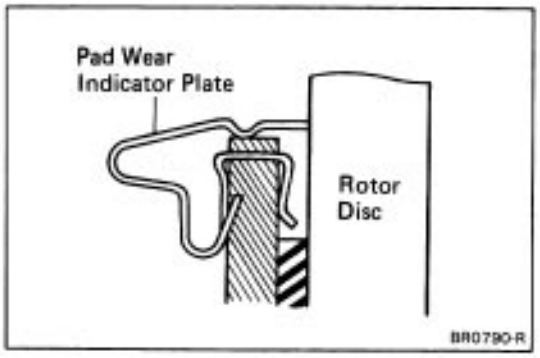

REPLACEMENT OF BRAKE PADS

HINT: If a squealing noise occurs from the brakes while driving, check the pad wear indicator plate. If. the pad wear indicator plate contacts the rotor disc, the brake pads should be replaced.

1. REMOVE FRONT WHEEL

Remove the wheel and temporarily fasten the rotor disc with the wheel nuts.

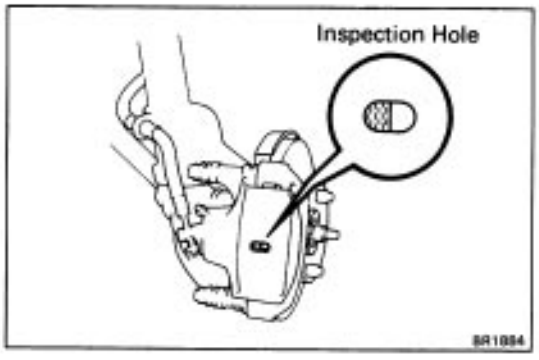

2. INSPECT PAD LINING THICKNESS

Check the pad thickness through the cylinder inspection hole and replace pads if not within specification.

Minimum thickness: 1.0 mm (0.039 in.)

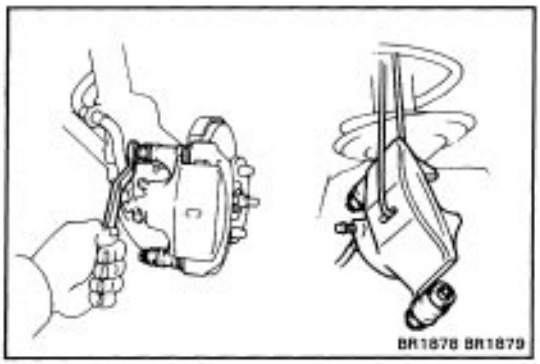

3. REMOVE CYLINDER FROM TORQUE PLATE

(a) Remove the two installation bolts from the torque plate.

(b) Remove the brake cylinder and suspend it so the hose is not stretched.

HINT: Do not disconnect the brake hose.

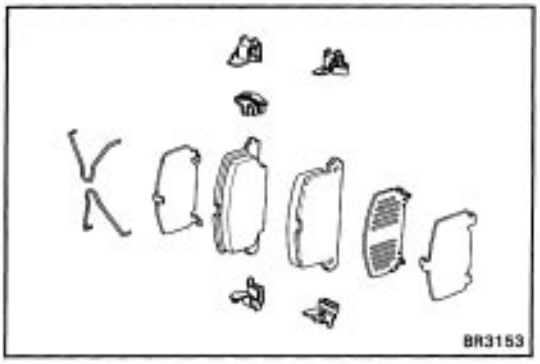

4. REMOVE FOLLOWING PARTS

- Two anti–squeal springs
- Two brake pads
- Three anti–squeal shims
- A pad wear indicator plate
- Four pad support plates

5. CHECK ROTOR DISC THICKNESS

(See step 2 on page BR–20)

6. CHECK ROTOR DISC RUNOUT

(See step 3 on page BR–20)

7. INSTALL NEW PAD SUPPORT PLATES

Install the four pad support plates to the torque plate.

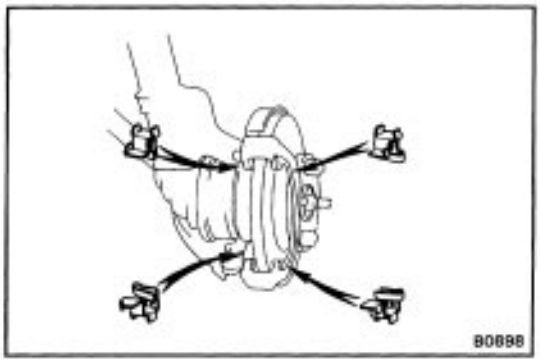

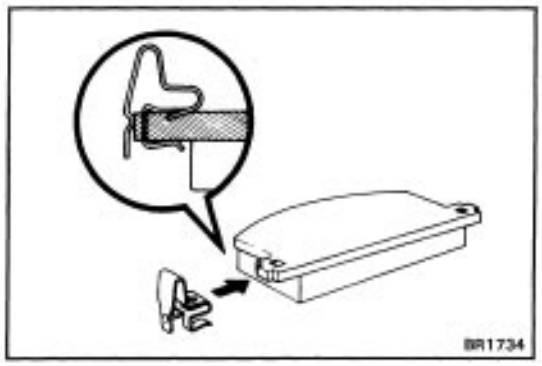

8. INSTALL NEW PADS

(a) Install a pad wear indicator plate to the inside pad.

HINT: Be sure the arrow on the pad wear indicator plate is pointing in the direction of the rotor disc rotation.

(b) Install the anti–squeal shims to the pads.

HINT: Apply disc brake grease to both side of the inner anti–squeal shim of the outside pad.

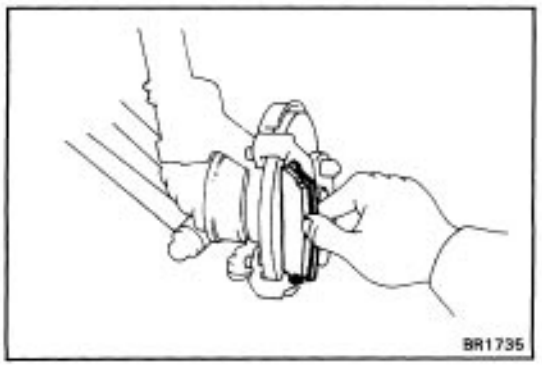

(c) Install the pads onto each support plate.

NOTICE: Do not allow oil or grease to get on the rubbing face.

(d) Install the anti–squeal springs in position.

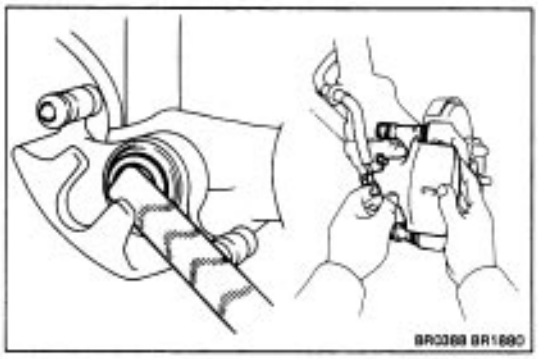

9. INSTALL CYLINDER

(a) Draw out a small amount of brake fluid from the reservoir.

(b) Press in the piston with a hammer handle or an equivalent.

HINT: Always change the pad on one wheel at a time as there is possibility of the opposite piston flying out.

(c) Insert the brake cylinder carefully so the dust boot is not wedged.

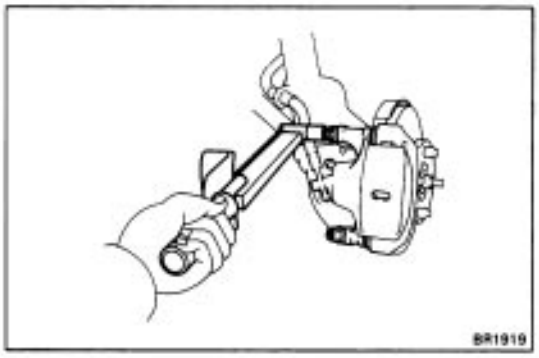

(d) Install and torque the two installation bolts.

Torque: 255 kg–cm (18 ft–lb, 25 N–m)

10. INSTALL FRONT WHEEL

11. FILL BRAKE FLUID

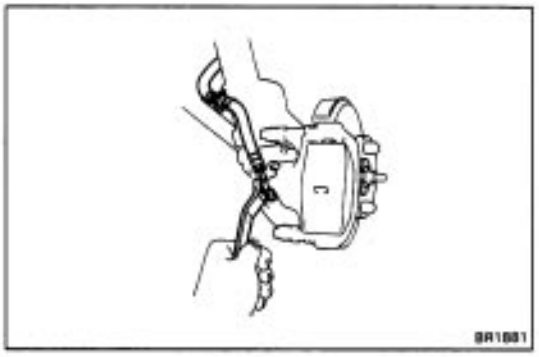

REMOVAL OF CYLINDER

(See page BR–16)

1. DISCONNECT BRAKE HOSE

Remove the union bolt and disconnect the flexible hose.

Use a container to catch the brake fluid.

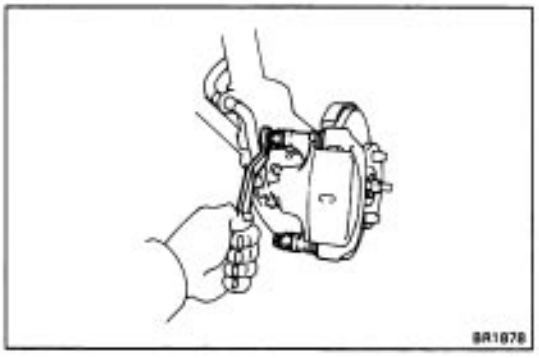

2. REMOVE BRAKE CYLINDER FROM TORQUE PLATE

Remove the two installation bolts and cylinder–.

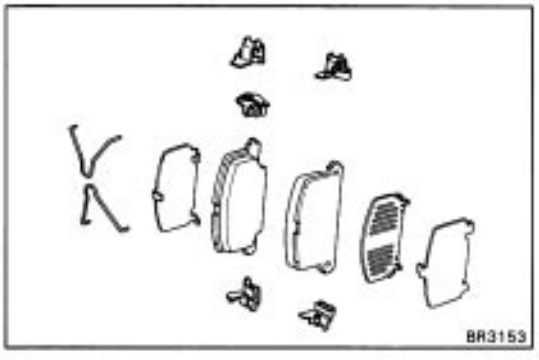

3. REMOVE PADS

(See step 4 on page BR–17)

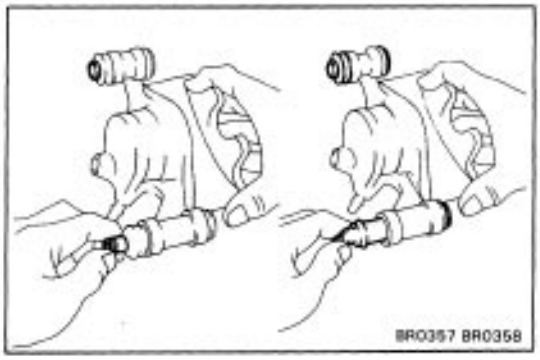

DISASSEMBLY OF CYLINDER

(See page BR–16)

1. REMOVE FOLLOWING PARTS

- Two cylinder sliding bushings
- Four dust boots

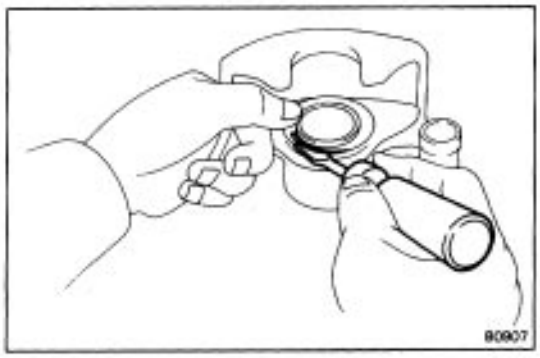

2. REMOVE CYLINDER BOOT SET RING AND BOOT

Using a screwdriver, remove the cylinder boot set ring and remove the cylinder boot.

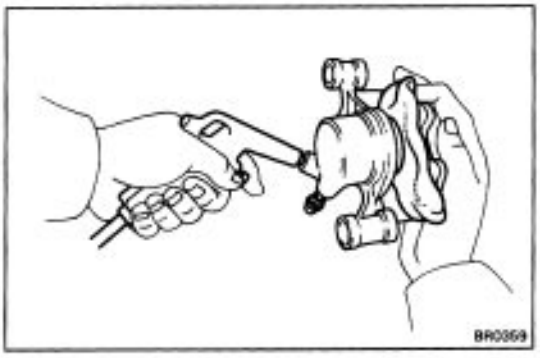

3. REMOVE PISTON FROM CYLINDER

(a) Put a piece of cloth or an equivalent between the piston and cylinder.

(b) Use compressed air to remove the piston from the cylinder.

CAUTION: Do not place your fingers in front of the piston when using compressed air.

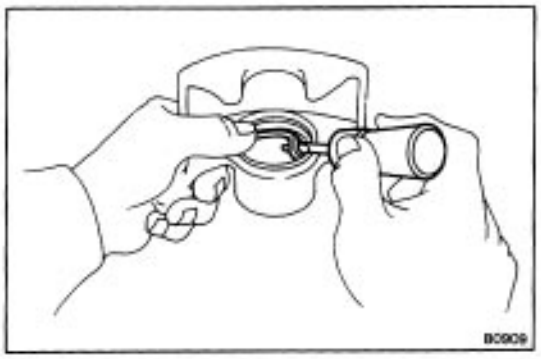

4. REMOVE PISTON SEAL FROM BRAKE CYLINDER

Using a screwdriver, remove the piston seal.

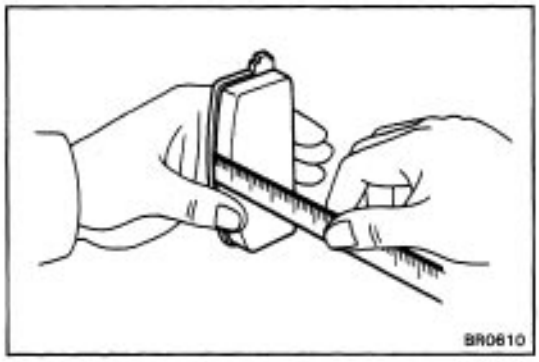

INSPECTION AND REPAIR OF FRONT BRAKE COMPONENTS

1. MEASURE PAD LINING THICKNESS

Standard thickness: 10.0 mm (0.394 in.)

Minimum thickness: 1.0 mm (0.039 in.)

Replace the pad if the thickness is less than the minimum or if it shows sign of uneven wear.

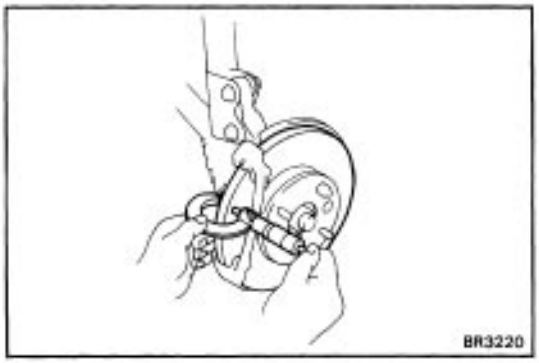

2. MEASURE ROTOR DISC THICKNESS

Standard thickness:

4A–GE Engine 22.0 mm (0.866 in.)

4A–FE Engine 18.0 mm (0.709 in.)

Minimum thickness:

4A–GE Engine 21.0 mm (0.827 in.)

4A–FE Engine 17.0 mm (0.669 in.)

If the disc is scored or worn, or if thickness is less than minimum, repair or replace the disc.

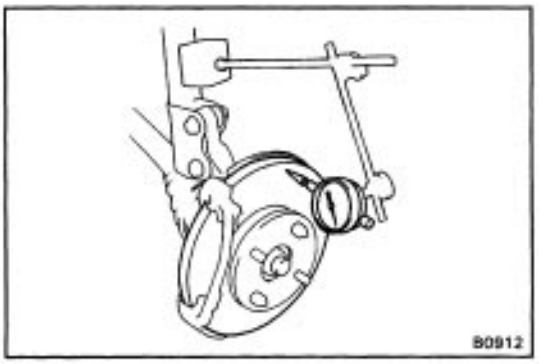

3. MEASURE ROTOR DISC RUNOUT

HINT: Before measuring the runout, confirm that the front hub bearing play is within specification.

Measure the rotor disc runout at 10 mm (0.39 in.) from the outer edge of the rotor disc.

Maximum disc runout: 0.09 mm (0.0035 in.)

If the runout is greater than the maximum, inspect and adjust it following the procedure below:

Then replace the disc if necessary.

(a) Remove the torque plate from the knuckle.

(b) Remove the hub nuts of the temporarily installed disc and pull off the rotor disc.

(c) Check that the hub axial play is within specification, and replace the bearing if not within specification.

(d) Install the rotor disc and measure the disc runout, then shift the rotor disc one fourth of a turn and measure the disc runout. Similarly measure the runout at each position, and select the position where the runout is minimum.

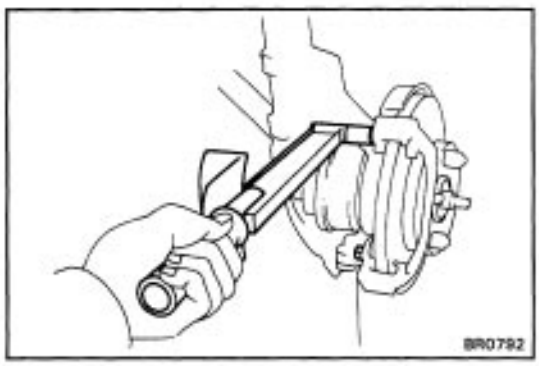

(e) In this position, if the runout is within specification, install the torque plate and torque the mounting bolts.

Torque: 900 kg–cm (65 ft–lb, 88 N–m)

(f) If not within specification, replace the rotor disc, and repeat (d) and (e).

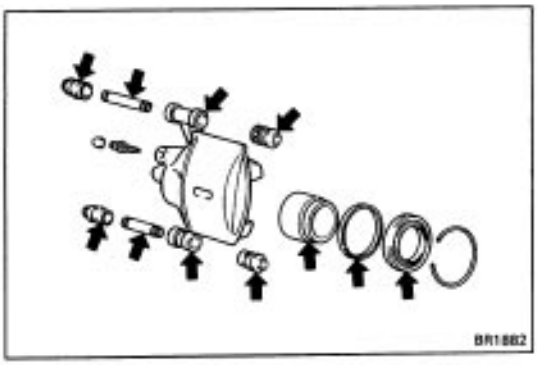

ASSEMBLY OF CYLINDER

(See page BR–16)

1. APPLY LITHIUM SOAP BASE GLYCOL GREASE TO PARTS INDICATED BY ARROWS

2. INSTALL PISTON SEAL AND PISTON IN CYLINDER

3. INSTALL CYLINDER BOOT AND SET RING IN CYLINDER

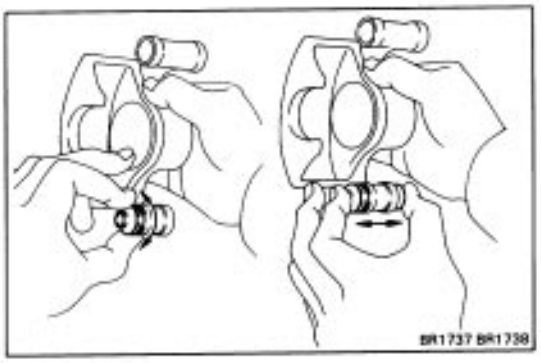

4. INSTALL DUST BOOTS AND CYLINDER SLIDING BUSHING

(a) Install the four dust boots to the brake cylinder.

(b) Insure that the boots are secured firmly to each brake cylinder groove.

(c) Install the sliding bushings into the boots.

(d) Insure that the boots are secured firmly to each, bushing groove.

INSTALLATION OF CYLINDER

(See page BR–16)

1. INSTALL PADS

(See step 7 and 8 on page BR–17)

2. INSTALL CYLINDER

(See step 9 on page BR–18)

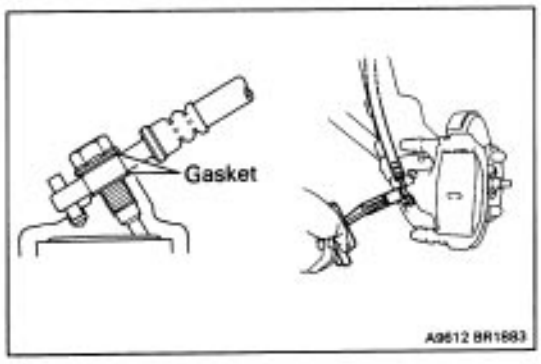

3. CONNECT FLEXIBLE HOSE

Set the flexible hose and new gaskets in position and install the union bolt.

Torque: 310 kg–cm (22 ft–lb, 30 N–m)

4. FILL BRAKE RESERVOIR WITH BRAKE FLUID AND BLEED BRAKE SYSTEM (See page BR–7)

5. CHECK FOR FLUID LEAKAGE

REAR BRAKE

Drum Brake

COMPONENTS

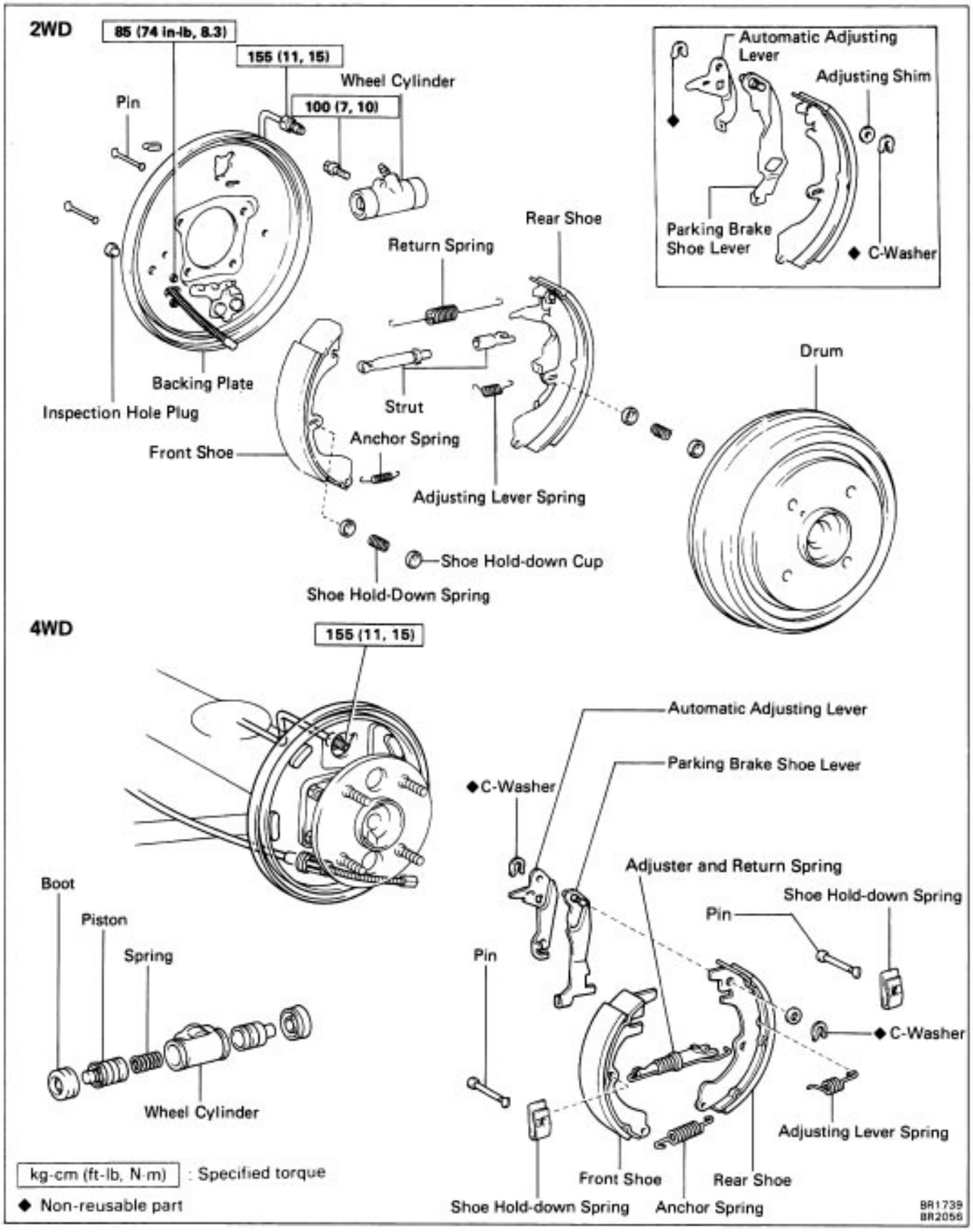

REMOVAL OF REAR BRAKE

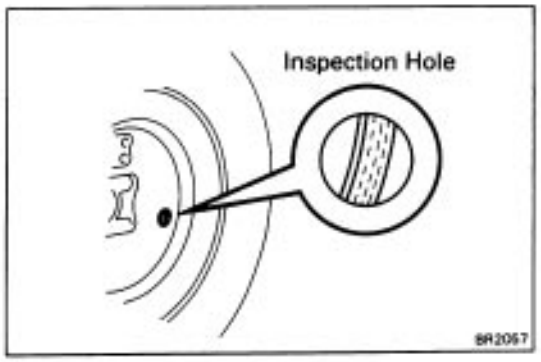

1. INSPECT SHOE LINING THICKNESS

Remove the inspection hole plug, and check the shoe lining thickness through the hole.

If less than minimum, replace the shoes.

Minimum thickness: 1.0 mm (0.039 in.)

2. REMOVE REAR WHEEL

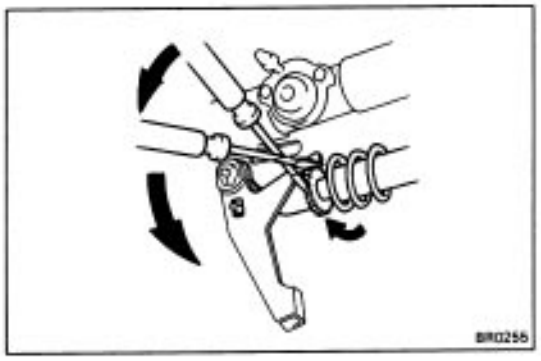

3. REMOVE BRAKE DRUM

If the brake drum cannot be removed easily, perform the following steps.

(a) Insert a screwdriver through the hole in the backing plate, and hold the automatic adjusting lever away from the adjuster.

(b) Using another screwdriver, reduce the brake shoe adjustment by turning the adjusting bolt.

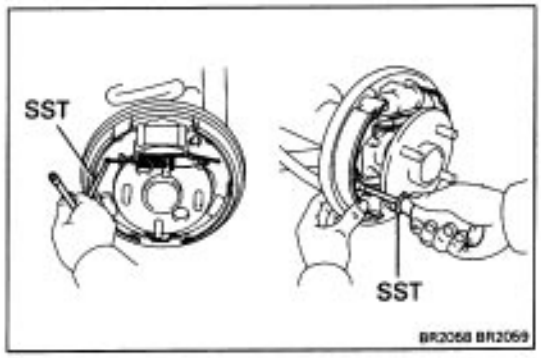

4. REMOVE FRONT SHOE

(a) Using SST, remove the return spring.

SST 09703–30010

Using SST, remove the shoe hold–down spring, two cups and pin from the front shoe.

SST 09718–00010

(c) Disconnect the anchor spring from the front shoe and remove the front shoe.

(d) Remove the anchor spring from the rear shoe.

5. REMOVE ADJUSTER AND REAR SHOE

(a) Using SST, remove the shoe hold–down spring, two cups and pin from the rear shoe.

SST 09718– 10

(b) Using pliers, remove the adjusting lever spring.

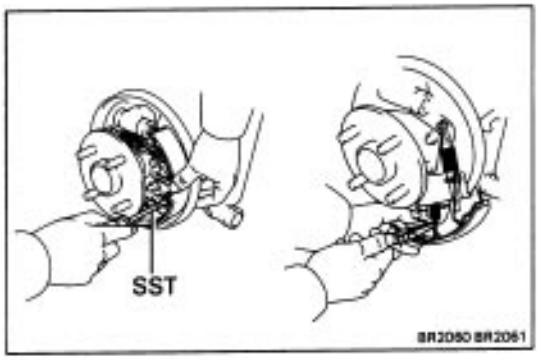

(c) Remove the adjuster together with the return spring.

(d) Using pliers, disconnect the parking brake cable from the lever and remove the rear shoe.

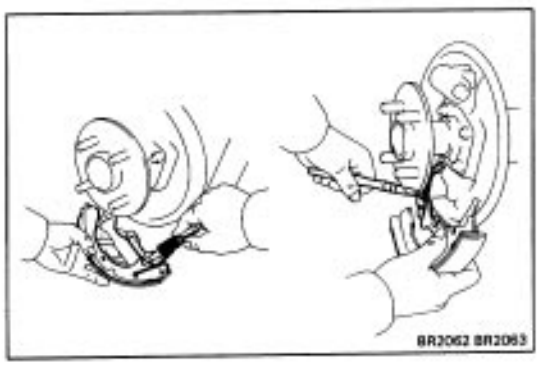

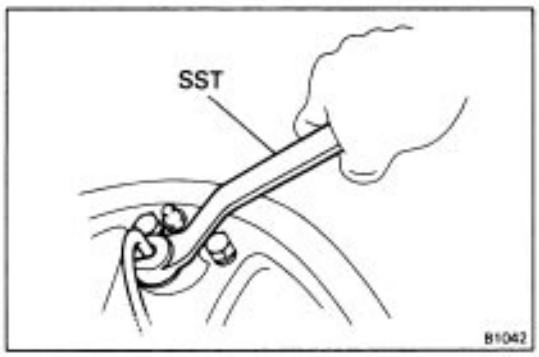

6. DISCONNECT BRAKE TUBE FROM WHEEL CYLINDER

Using SST, disconnect the brake tube. Use a container to catch the brake fluid.
SST 09751–36011

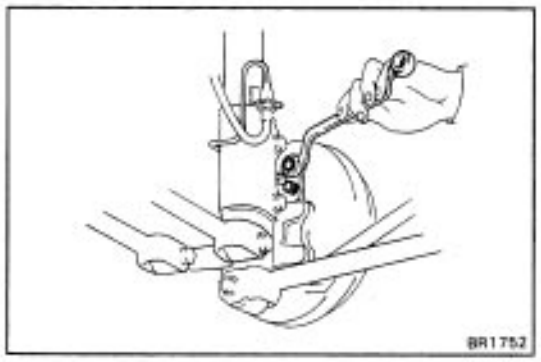

7. REMOVE WHEEL CYLINDER

Remove the two bolts and wheel cylinder.

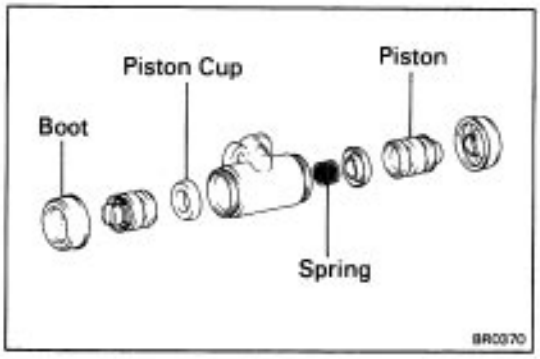

8. REMOVE FOLLOWING PARTS FROM WHEEL CYLINDER

(a) Two boots
(b) Two pistons
(c) Two piston cups
(d) Spring

INSPECTION AND REPAIR OF REAR BRAKE COMPONENTS

1. INSPECT DISASSEMBLED PARTS

Inspect the disassembled parts for wear, rust or damage.

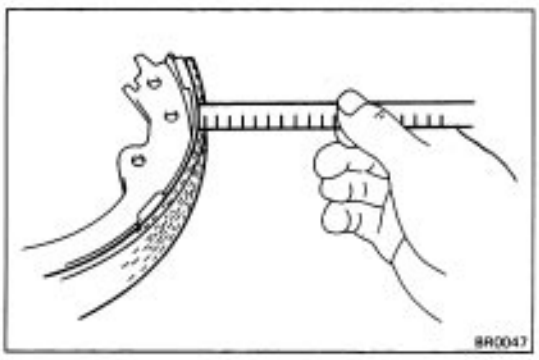

2. INSPECT BRAKE SHOE LINING THICKNESS

Standard thickness: 4.0 mm (0.157 in.)
Minimum thickness: 1.0 mm (0.039 in.)

If the shoe lining is less than minimum or shows signs of uneven wear, replace the brake shoes.
HINT: If any of the brake shoes have to be replaced, replace all of the rear brake shoes in order to maintain even braking.

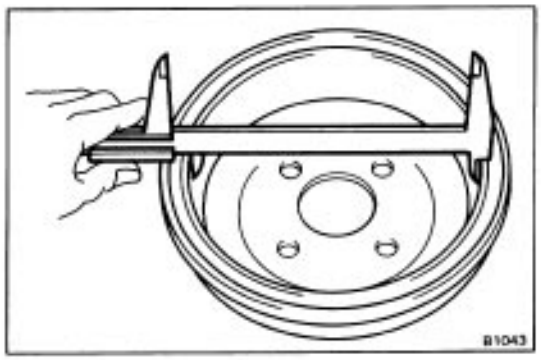

3. INSPECT BRAKE DRUM INSIDE DIAMETER

Standard inside diameter: 200.0 mm (7.874 in.)

Maximum inside diameter: 201.0 mm (7.913 in.)

If the drum is scored or worn, the brake drum may be lathed to the maximum inside diameter.

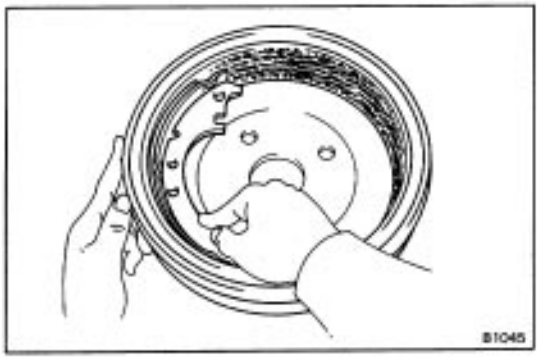

4. INSPECT BRAKE LINING AND DRUM FOR PROPER CONTACT

If the contact between the brake lining and drum is improper, repair the lining with a brake shoe grinder, or replace the brake shoe assembly.

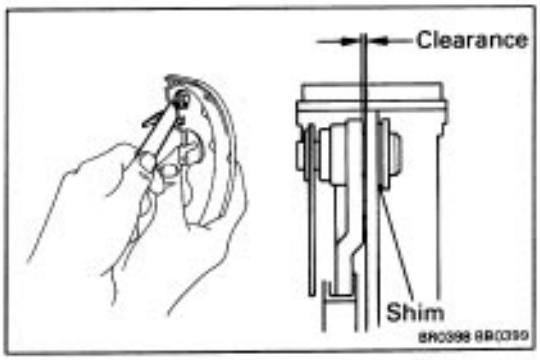

5. MEASURE CLEARANCE BETWEEN BRAKE SHOE AND LEVER

Using a feeler gauge, measure the clearance.

Standard clearance: Less than 0.35 mm (0.0138 in.)

If the clearance is not within specification, replace the shim with one of the correct size.

Shim thickness	mm (in.)
0.2 (0.008)	0.5 (0.020)
0.3 (0.012)	0.6 (0.024)
0.4 (0.016)	0.9 (0.035)

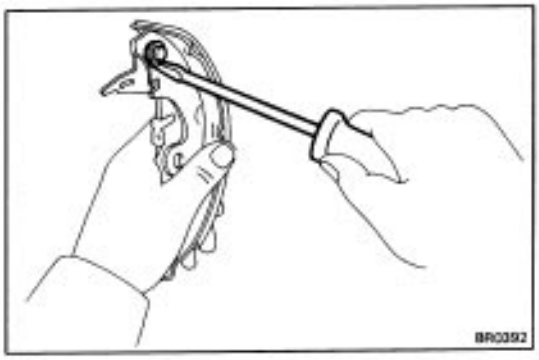

6. IF NECESSARY, REPLACE SHIM

(a) Remove the parking brake shoe lever, and install the correct size shim.

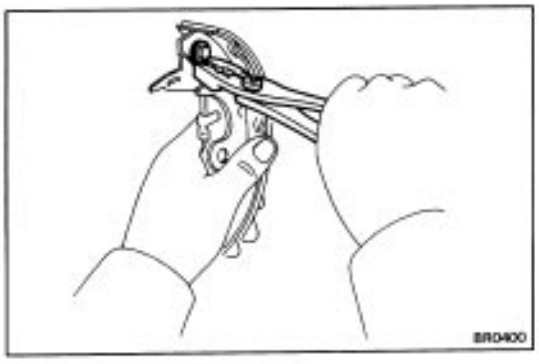

(b) Install the parking brake shoe lever with a new C–washer.

(c) Remeasure the clearance.

INSTALLATION OF REAR BRAKE

(See page BR–22)

HINT: Assemble the parts in the correct direction as shown.

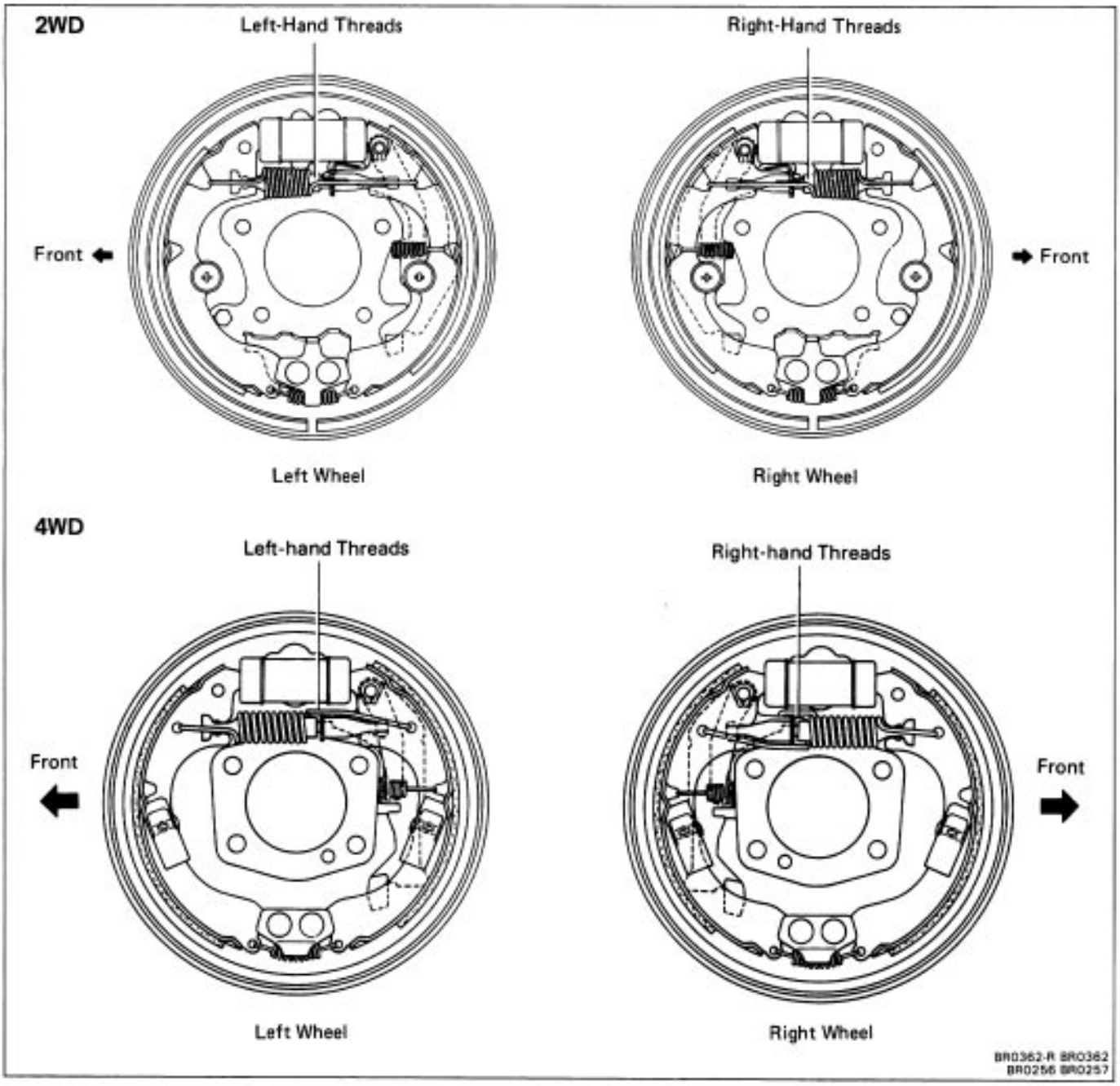

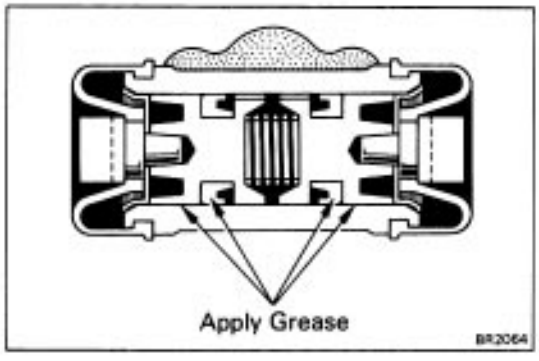

1. APPLY LITHIUM SOAP BASE GLYCOL GREASE TO FOLLOWING PARTS

(a) Two piston cups

(b) Two pistons

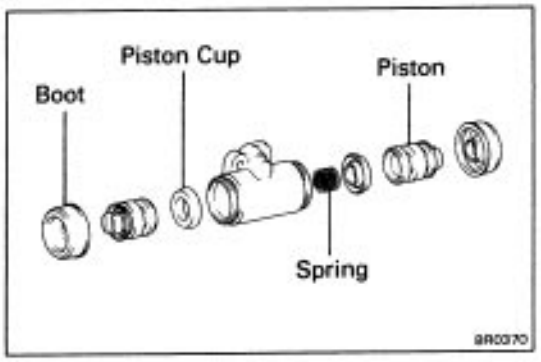

2. ASSEMBLE WHEEL CYLINDER

(a) Install two piston cups to the pistons.
(b) Install the spring and two pistons into the wheel cylinder. Check that the flanges of the piston are pointed inward.
(c) Install two boots.

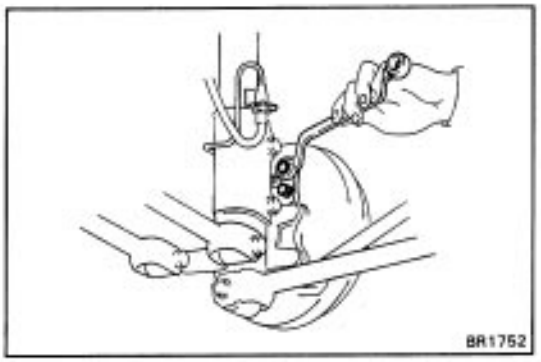

3. INSTALL WHEEL CYLINDER

Install the wheel cylinder on the backing plate with the two bolts.
Torque: 100 kg–cm (7 ft–lb, 10 N–m)

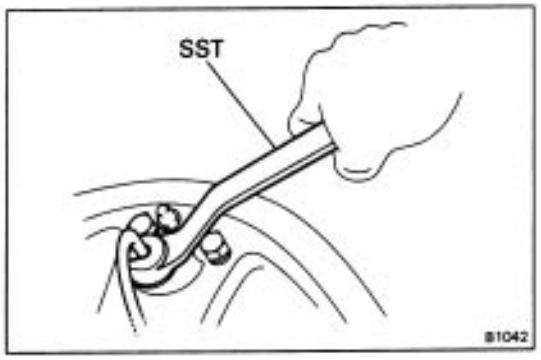

4. CONNECT BRAKE TUBE TO WHEEL CYLINDER

Using SST, connect the brake tube.
SST 09751–36011
Torque: 155 kg–cm (11 ft–lb, 15 N–m)

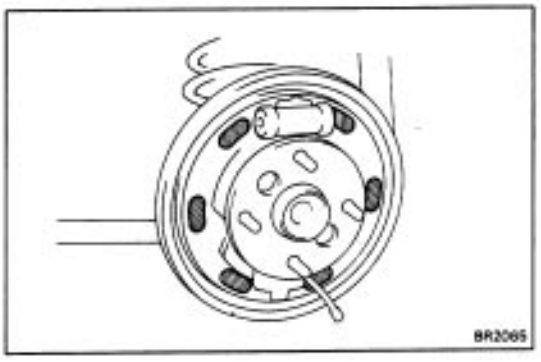

5. APPLY HIGH TEMPERATURE GREASE TO FOLLOWING PARTS

(a) Backing plate and brake shoe contact points
(b) Anchor plate and brake shoe contact points

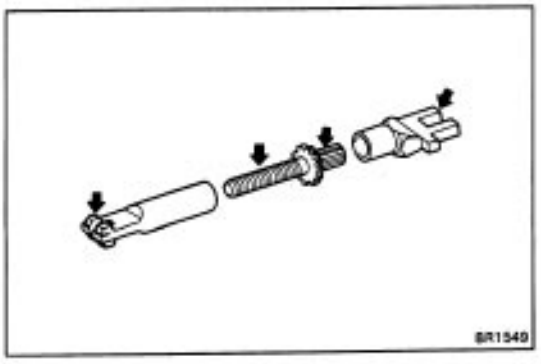

(c) Adjusting bolt
(d)Adjuster and brake shoe contact points

6. INSTALL ADJUSTER AND REAR SHOE

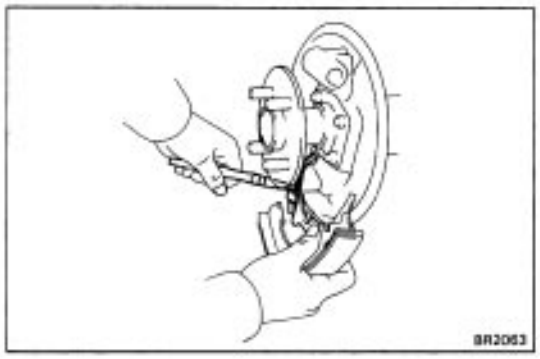

(a) Using pliers, connect the parking brake cable to the lever.

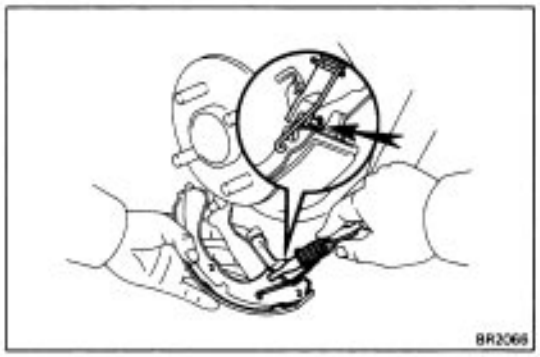

(b) Set the adjuster and return spring.

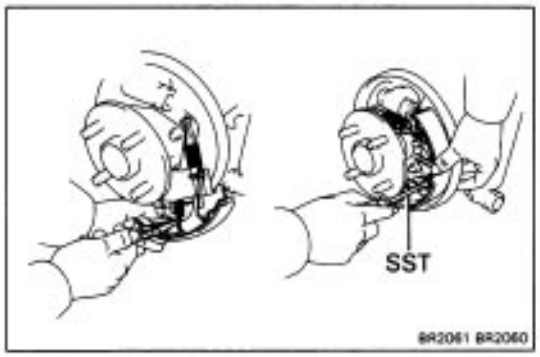

(c) Install the adjusting lever spring.

(d) Set the rear shoe in place with the end of the shoe inserted in the wheel cylinder and the other end in the anchor plate.

NOTICE: Do not allow oil or grease to get on the rubbing face.

(e) Using SST, install the shoe hold–down spring, two cups and pin. SST 09718–00010

7. INSTALL FRONT SHOE

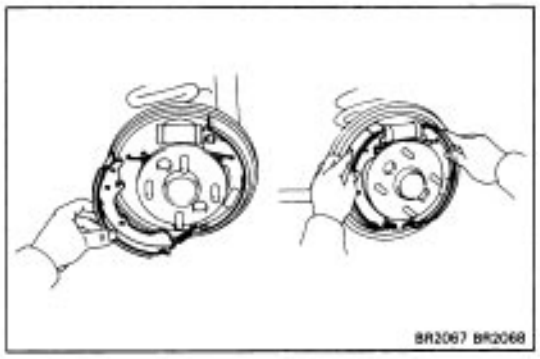

(a) Install the anchor spring between the front and rear shoes.

(b) Set the front shoe in place with the end of the shoe inserted in the wheel cylinder and the adjuster in place.

NOTICE: Do not allow oil or grease to get on the rubbing face.

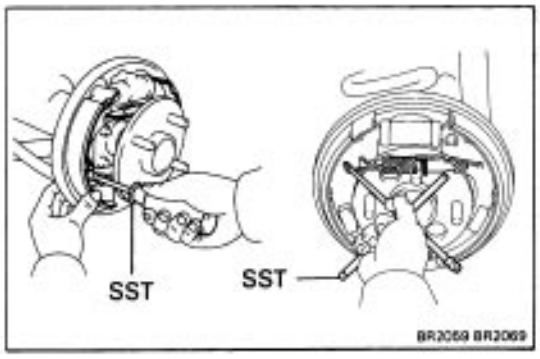

(c) Using SST, install the shoe hold–down spring, two cups and pin.
SST 09718–00010

(d) Using SST, connect the return spring.
SST 09703–30010

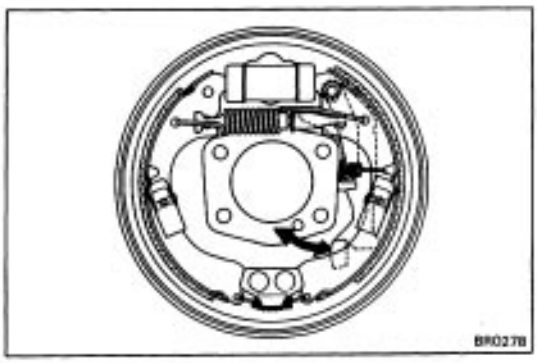

8. CHECK OPERATION OF AUTOMATIC ADJUSTING MECHANISM

(a) Move the parking brake lever of the rear shoe back and forth, as shown. Check that the adjusting bolt turns.

If the adjusting bolt does not turn, check for incorrect installation of the rear brakes.

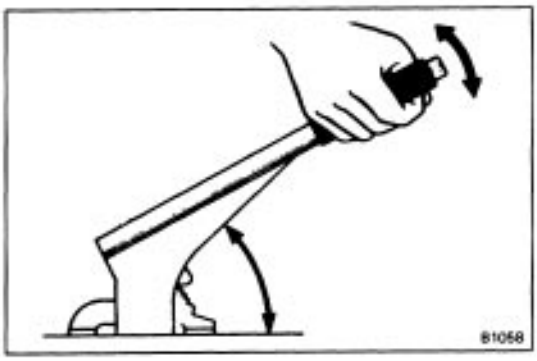

(b) Adjust the adjuster length to the shortest possible amount.

(c) Install the drum.

(d) Pull the parking brake lever all the way up until a clicking sound can no longer be heard.

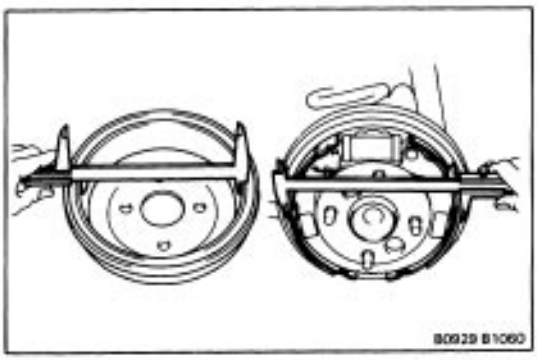

9. CHECK CLEARANCE BETWEEN BRAKE SHOES AND DRUM

(a) Remove the drum.

(b) Measure the brake drum inside diameter and diameter of the brake shoes. Check that the difference between the diameters is the correct shoe clearance.

Shoe clearance: 0.6 mm (0.024 in.)

If incorrect, check the parking brake system.

10. INSTALL BRAKE DRUM AND REAR WHEEL

11. FILL BRAKE RESERVOIR WITH BRAKE FLUID AND BLEED BRAKE SYSTEM

12. CHECK FOR FLUID LEAKAGE

Disc Brake

COMPONENTS

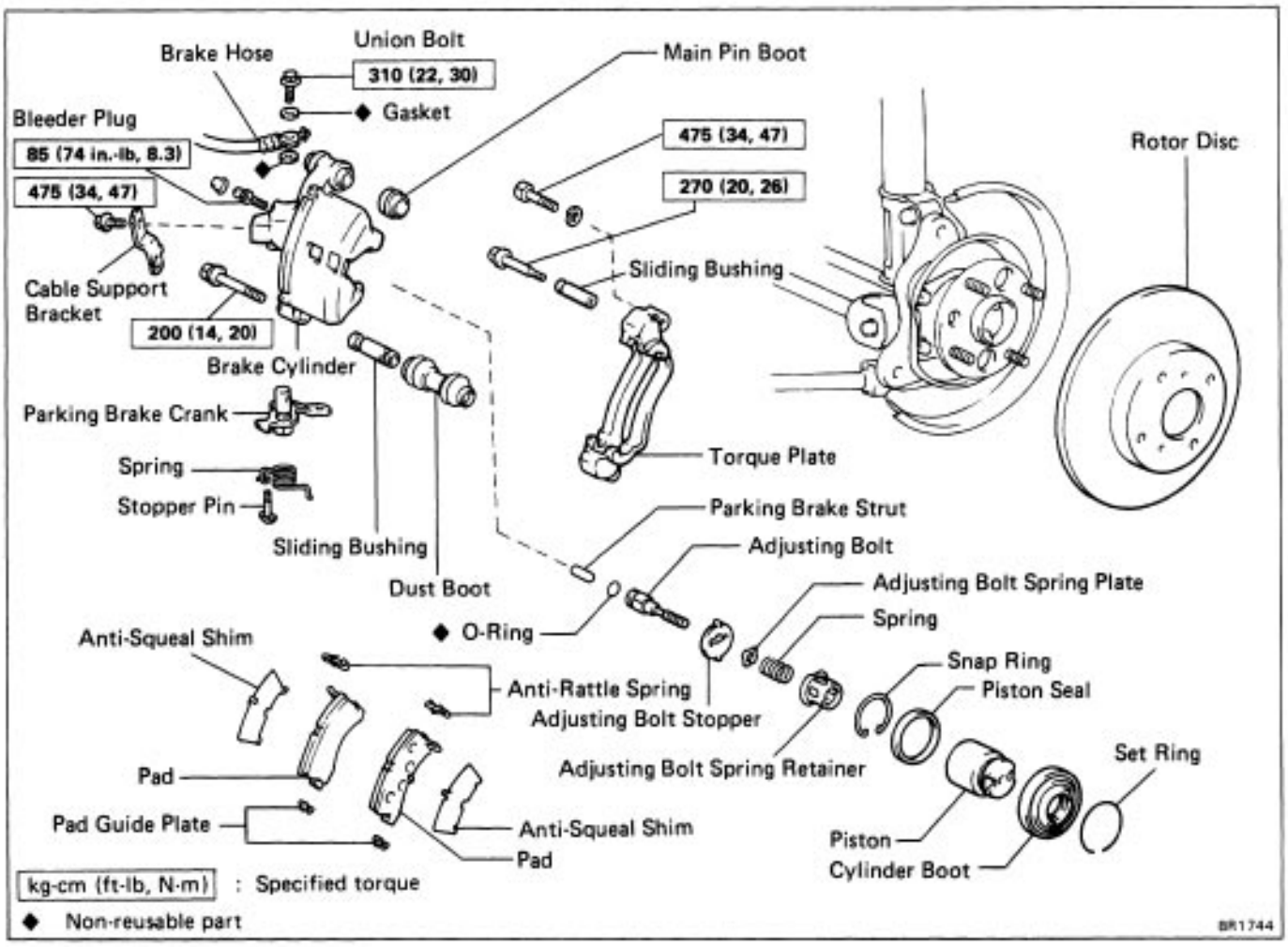

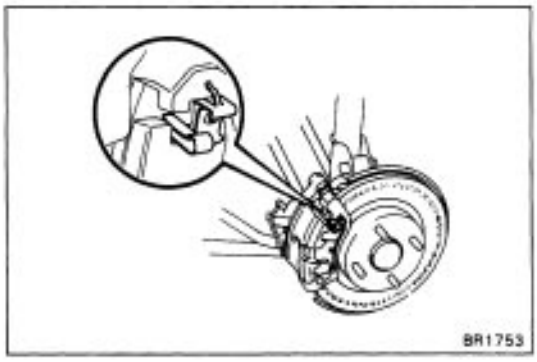

REPLACEMENT OF BRAKE PADS

HINT: If a squealing noise occurs from the rear brakes while driving, check the pad wear indicator plate. If there are traces of the indicator plate contacting the rotor disc, the brake pad should be replaced.

1. REMOVE REAR WHEEL

Remove the wheel and temporarily fasten the rotor disc with the hub nuts.

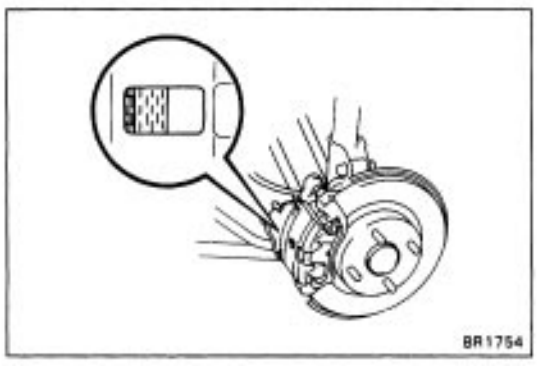

2. INSPECT PAD LINING THICKNESS

Check the pad thickness through the cylinder inspection hole and replace pads if not within specification.

Minimum thickness: 1.0 mm (0.039 in.)

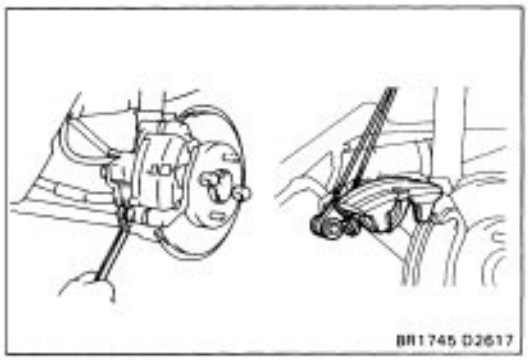

3. REMOVE CYLINDER FROM TORQUE PLATE

(a) Remove the installation bolt from the torque plate.

(b) Remove the brake cylinder and suspend it so the hose is not stretched.

HINT: Do not remove the cylinder from the main pin, and do not disconnect the brake hose.

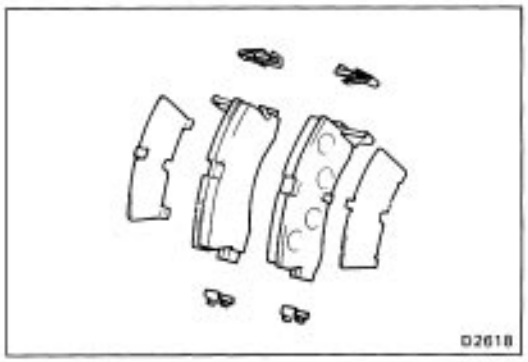

4. REMOVE FOLLOWING PARTS:

- Two brake pads
- Two anti–squeal shims
- Two anti–rattle springs
- Two pad guide plates

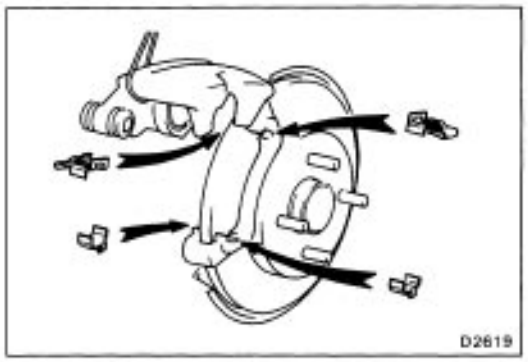

5. INSTALL PAD GUIDE PLATES AND ANTI–RATTLE SPRINGS

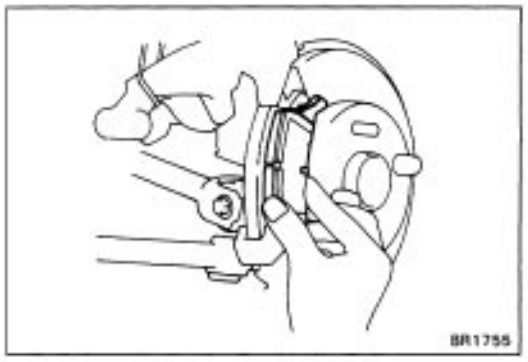

6. INSTALL NEW PADS AND ANTI–SQUEAL SHIMS

(a) Install the anti–squeal shims to the pads.

(b) Raise the cylinder, and install the pads to the torque plate.

HINT: Install the pads so the wear indicator is at the top side.

NOTICE: Do not allow oil or grease to get on the rubbing face.

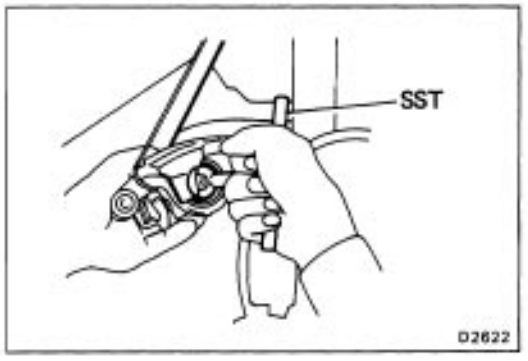

7. LOWER CYLINDER

(a) Using SST, slowly turn the piston clockwise while pushing it into where it locks.

SST 09719–14020 (09719–00020)

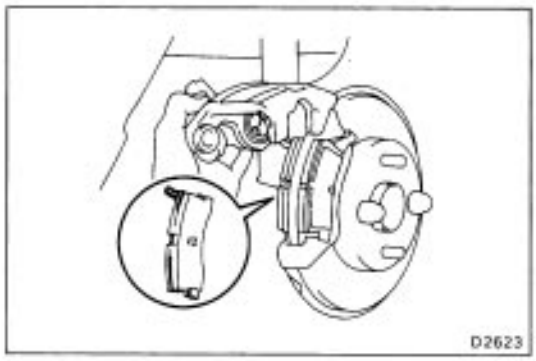

(b) Fit the pad protrusion into the piston stopper groove, and install the cylinder.

HINT: Insert the cylinder carefully so the boot is not wedged.

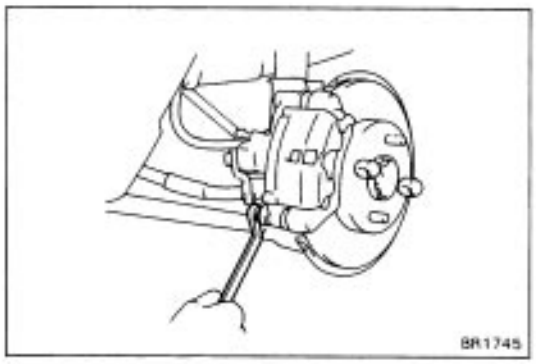

8. INSTALL CYLINDER INSTALLATION BOLT

Install and torque the cylinder installation bolt.

Torque: 200 kg–cm (14 ft–lb, 20 N – m)

9. INSTALL REAR WHEEL

10. CHECK THAT FLUID LEVEL IS AT "MAX" LINE

11. ADJUST PARKING BRAKE AUTOMATIC ADJUSTER BY DEPRESSING BRAKE PEDAL SEVERAL TIMES

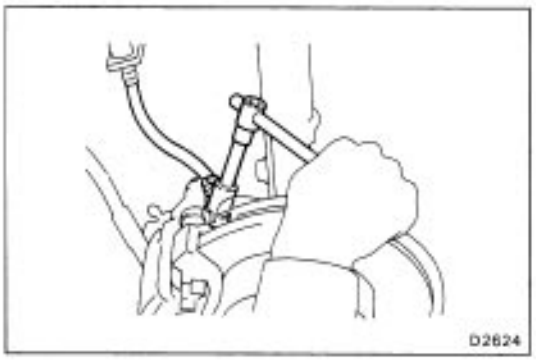

REMOVAL OF CYLINDER

(See page BR–26)

1. DISCONNECT BRAKE HOSE FROM CYLINDER

(a) Remove the union bolt and two gaskets, and disconnect the brake hose.

(b) Use a container to catch the brake fluid.

2. DISCONNECT PARKING BRAKE CABLE FROM CYLINDER

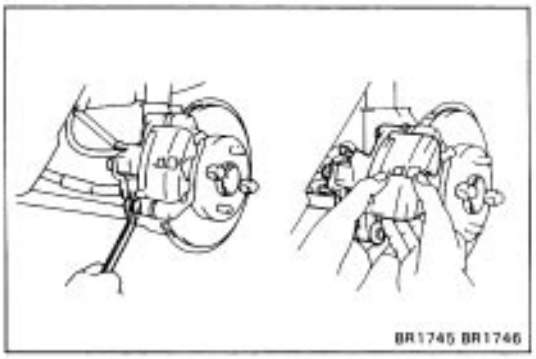

3. REMOVE CYLINDER

Remove the installation bolt and cylinder.

DISASSEMBLY OF CYLINDER

(See page BR–30)

1. REMOVE SLIDING BUSHING AND BOOT

2. REMOVE MAIN PIN BOOT

3. REMOVE CYLINDER BOOT SET RING AND CYLINDER BOOT

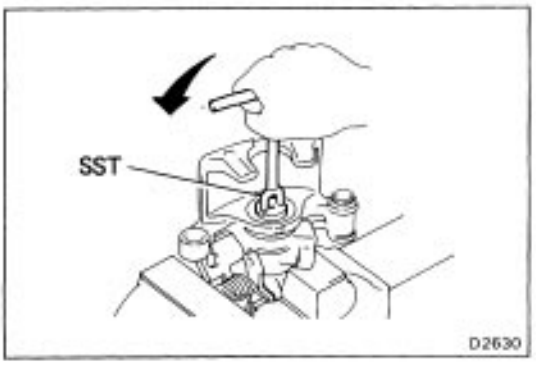

4. REMOVE PISTON FROM CYLINDER

Using SST, turn piston counterclockwise and remove it.
SST 09719–14020 (09719–00020)

5. REMOVE PISTON SEAL FROM CYLINDER

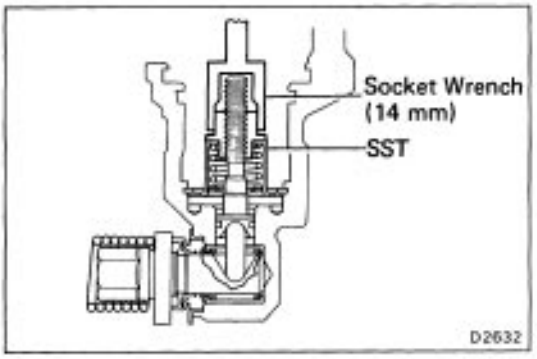

6. REMOVE SNAP RING FROM CYLINDER

(a) Set SST onto the adjusting bolt, and lightly tighten it with a 14 mm socket.
SST 09756–00010

NOTICE:

- **To insure safety, always use SST as there is a possibility of the spring flying out, causing injury or damage to the interior surface of the cylinder.**
- **Be careful not to tighten the SST too tightly as this may damage the spring retainer.**

(b) Using snap ring pliers, remove the snap ring from the cylinder.

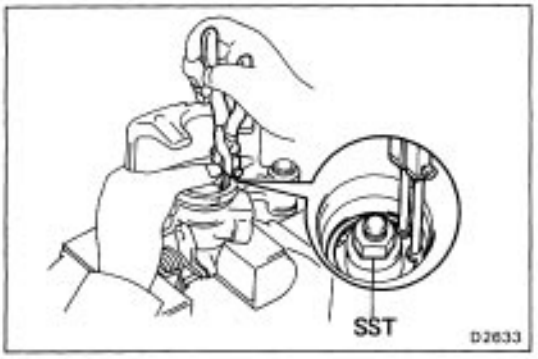

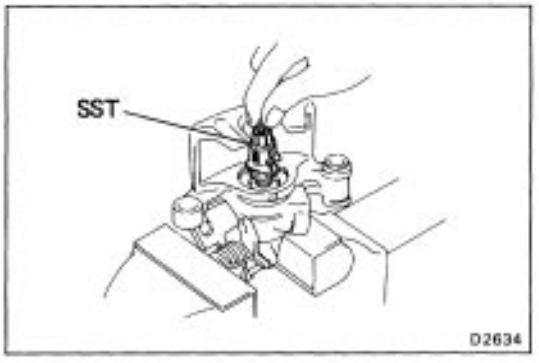

7. REMOVE ADJUSTING BOLT

From the cylinder, pull out the spring retainer, spring, spring plate and stopper together with the adjusting bolt.

NOTICE:

- **Be careful not to pry too hard.**
- **Be careful not to damage the O–ring.**

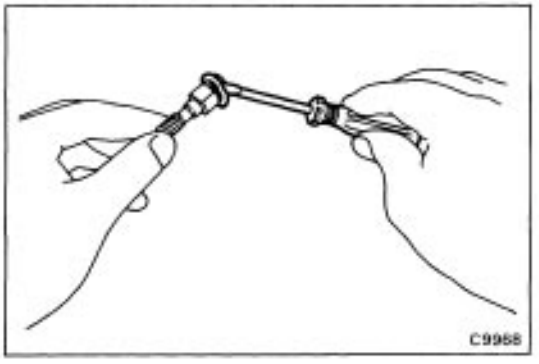

8. DISASSEMBLE ADJUSTING BOLT

(a) Remove SST.
SST 09756–00010

(b) Remove the spring retainer, spring, spring plate and stopper from the adjusting bolt.

(c) Remove the O–ring from the adjusting bolt.

9. REMOVE PARKING BRAKE STRUT

10. REMOVE CABLE SUPPORT BRACKET

11. REMOVE TORSION SPRING FROM PARKING BRAKE CRANK

12. REMOVE PARKING BRAKE CRANK FROM CYLINDER

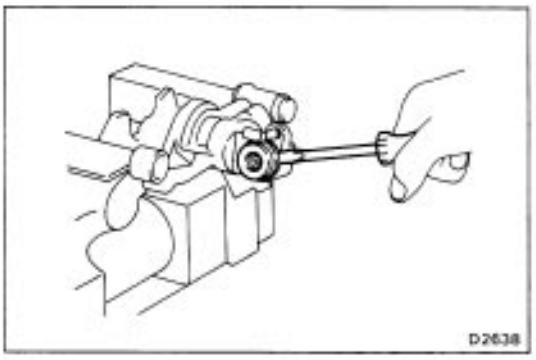

13. REMOVE PARKING BRAKE CRANK BOOT

Using a screwdriver, lightly tap on the metal portion of the boot and remove it.

HINT: Do not remove the boot unless replacing it.

14. REMOVE STOPPER PIN

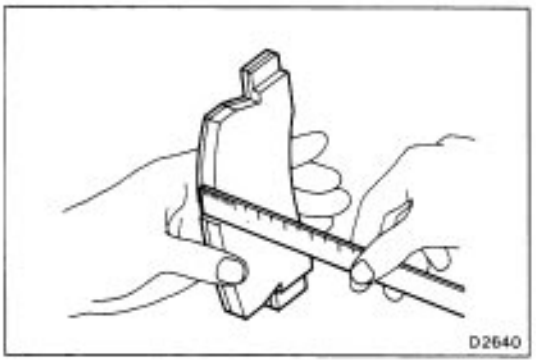

INSPECTION AND REPAIR OF REAR BRAKE COMPONENTS

1. MEASURE PAD LINING THICKNESS

Standard thickness: 10.0 mm (0.394 in.)

Minimum thickness: 1.0 mm (0.039 in.)

Replace the pad if the thickness is less than the minimum or if it shows sign of uneven wear.

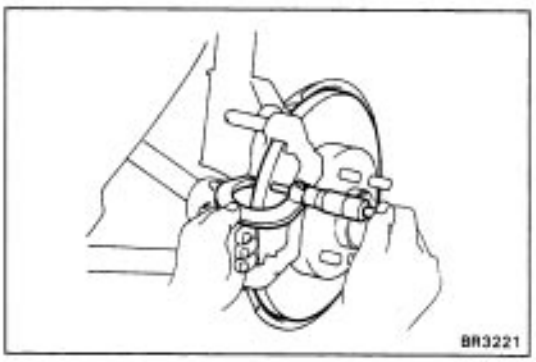

2. MEASURE ROTOR DISC THICKNESS

Standard thickness: 9.0 mm (0.354 in.)

Minimum thickness: 8.0 mm (0.315 in.)

If the disc is scored or worn, if thickness is less than minimum, repair or replace the disc.

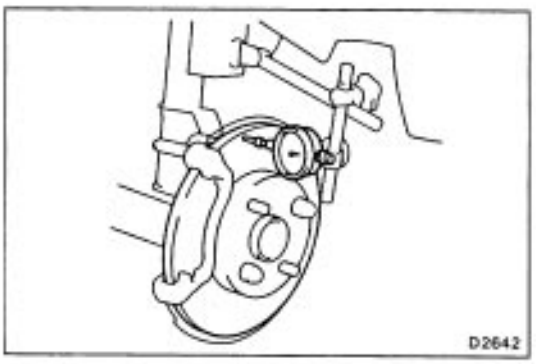

3. MEASURE ROTOR DISC RUNOUT

Measure the rotor disc runout at 10 mm (0.39 in.) from the outer edge of the rotor disc.

Maximum disc runout: 0.10 mm (0.0039 in.)

If the runout is greater than the maximum, replace the disc.

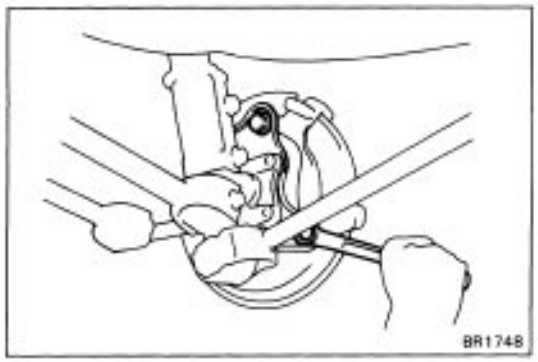

4. IF NECESSARY, REPLACE ROTOR DISC

(a) Remove the torque plate from the rear axle carrier.
(b) Remove the hub nuts and rotor disc.
(c) Install a new rotor disc and temporarily fasten the hub nuts.
(d) Install the torque plate to the rear axle carrier.
Torque: 475 kg–cm (34 ft–lb, 47 N – m)

ASSEMBLY OF CYLINDER

(See page BR–30)

1. APPLY LITHIUM SOAP BASE GLYCOL GREASE TO PARTS INDICATED BY ARROWS

HINT: Pack the lithium soap base glycol grease into areas marked ”A”.

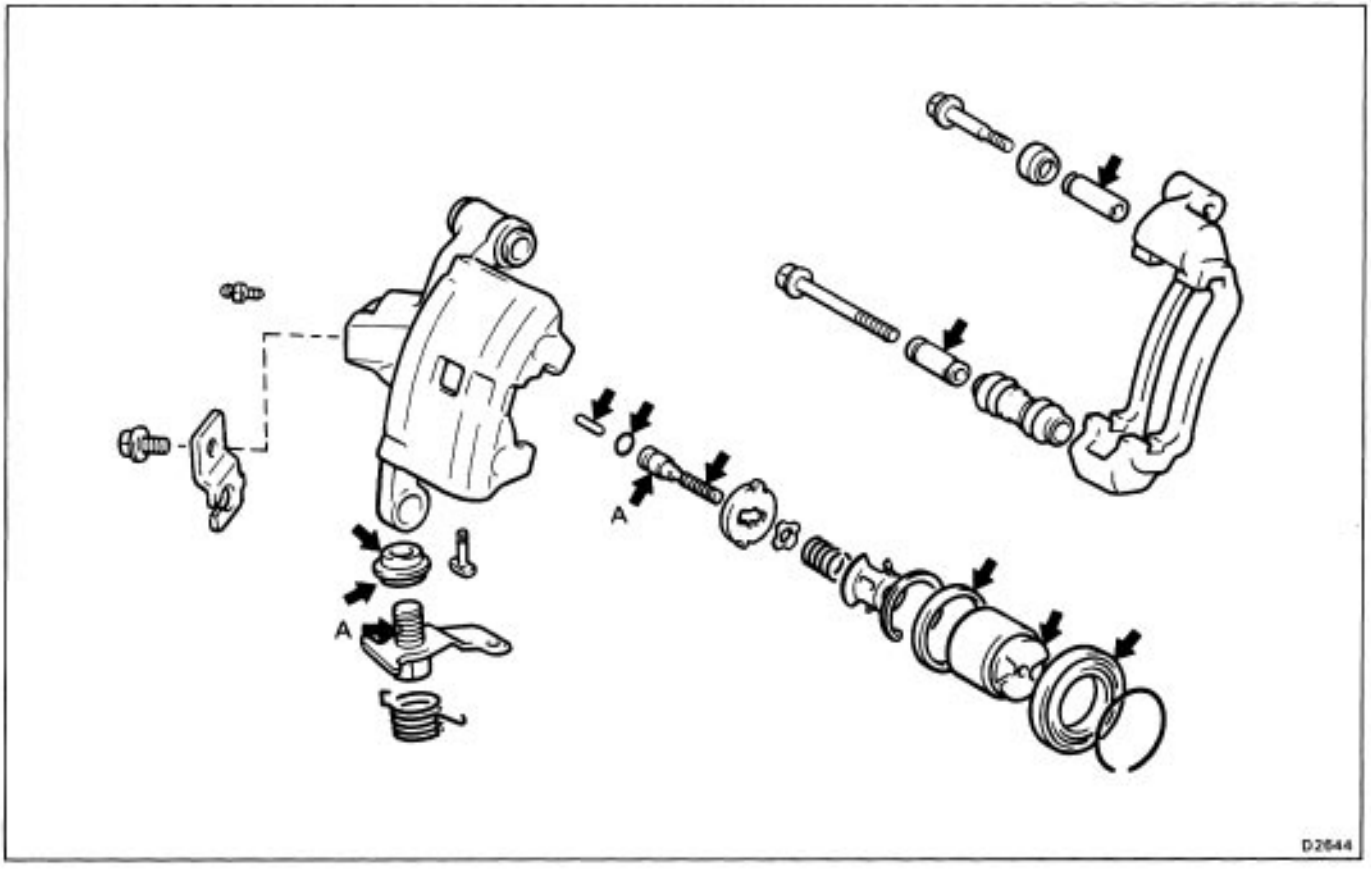

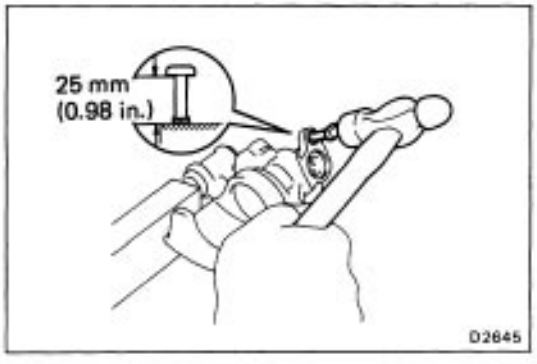

2. INSTALL STOPPER PIN

Tap in the pin to the brake cylinder until the stopper pin extends 25 mm (0.98 in.).

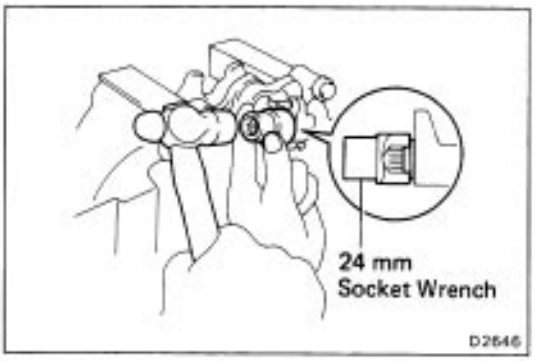

3. INSTALL PARKING BRAKE CRANK BOOT IN CYLINDER

Using a 24 mm socket wrench, tap in the boot to the cylinder.

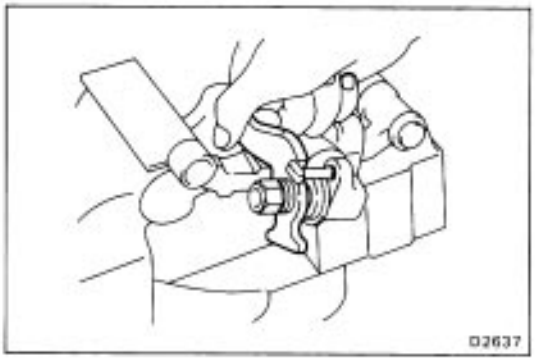

4. INSTALL PARKING BRAKE CRANK IN CYLINDER

NOTICE: Securely match the crank boot with the groove of the crank seal.

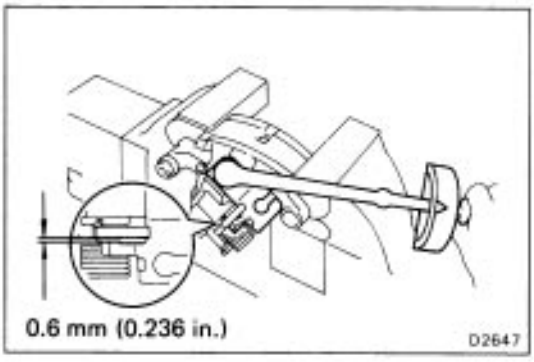

5. INSTALL CABLE SUPPORT BRACKET

(a) Press the surface of the support bracket flush against the cylinder wall and tighten the bolt.

Torque: 475 kg–cm (34 ft–ib, 47 N–m)

(b) Check that the clearance between the parking brake crank and cable support bracket is 0.6 mm (0.236 in.).



6. INSTALL TORSION SPRING

Install the torsion spring and check that the parking brake crank subassembly is in touch with the stopper pin.

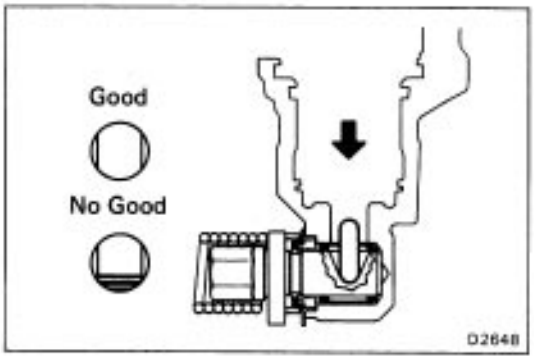

7. INSTALL PARKING BRAKE STRUT

Before installing the strut, adjust the rollers of the needle roller bearing so they do not catch on the cylinder hole.

Then install the strut to the cylinder.

8. INSTALL A NEW O–RING TO ADJUSTING BOLT

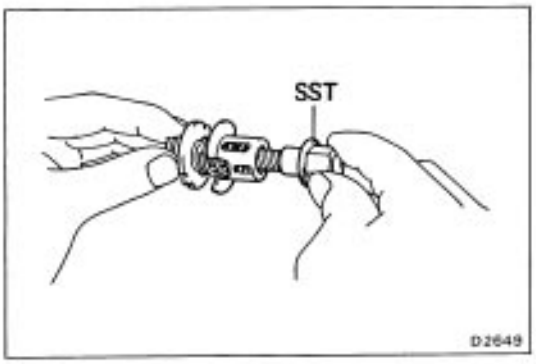

9. ASSEMBLE ADJUSTING BOLT

(a) Assemble the stopper, plate, spring and spring retainer to the adjusting bolt, and using SST, fully tighten them down by hand.
SST 09756–00010

NOTICE:

- **Position the inscribed surface of the stopper upward.**
- **Align the notches of the spring retainer with the notches of the stopper.**

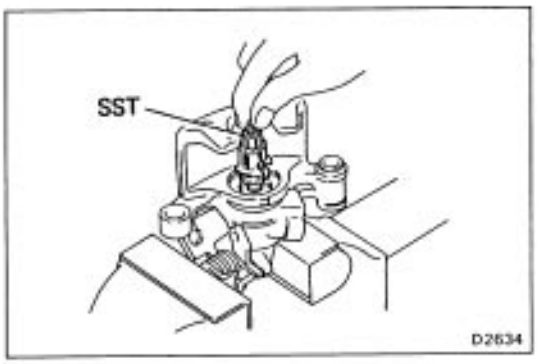

(b) Install the adjusting bolt subassembly into the cylinder.

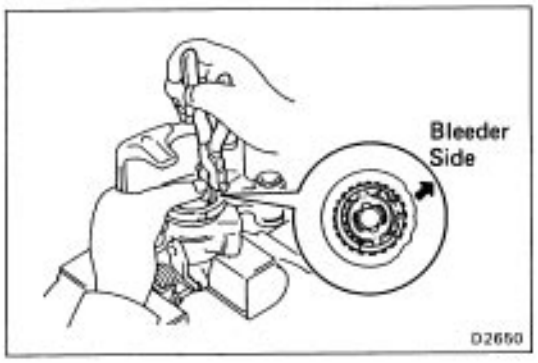

10. INSTALL SNAP RING

(a) Using snap ring pliers, install the snap ring.
HINT: Face the snap ring opening toward the bleeder side.
(b) Remove SST.
SST 09756–00010
(c) Firmly pull up the adjusting bolt by hand and insure that it does not move.

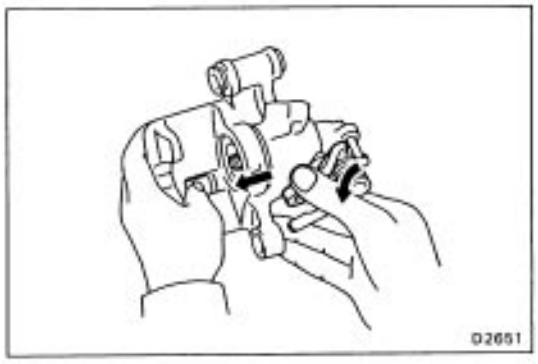

11. PERFORM OPERATIONAL CHECK

After performing steps 1 to 10, move the parking brake crank by hand and insure that the adjusting bolt moves smoothly.

12. INSTALL PISTON SEAL IN CYLINDER

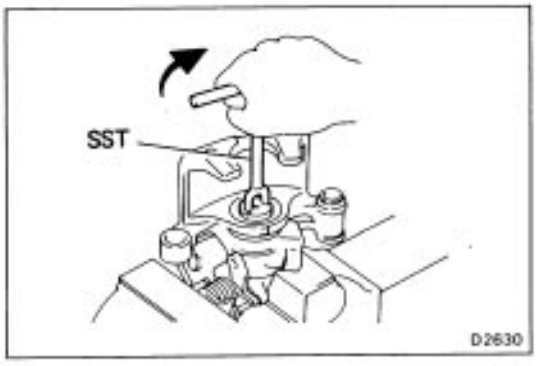

13. ASSEMBLE PISTON IN CYLINDER

(a) Using SST, slowly screw in the piston clockwise until it will not descend any further.
SST 09719–14020 (09719–00020)

(b) Align the center of the piston stopper groove with the positioning protrusion of the cylinder.

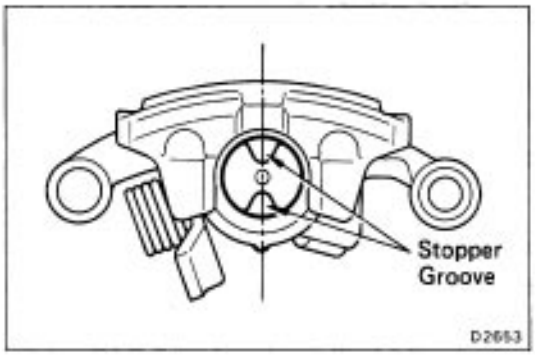

14. INSTALL CYLINDER BOOT IN CYLINDER

15. INSTALL SET RING IN CYLINDER

16. INSTALL MAIN PIN BOOT

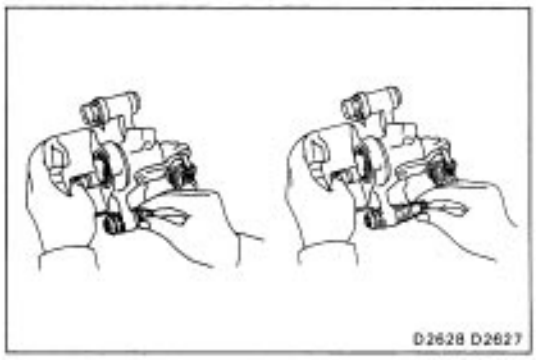

17. INSTALL DUST BOOT AND SLIDING BUSHING

(a) Install the dust boot.

HINT: Be careful that the seal does not fold under.

(b) Install the bushing into the boot.

INSTALLATION OF CYLINDER

(See page BR–30)

1. INSTALL ANTI–RATTLE SPRINGS AND PAD GUIDE PLATES

(See step 5 on page BR–31)

2. INSTALL PADS AND ANTI–SQUEAL SHIMS

(See step 6 on page BR–31)

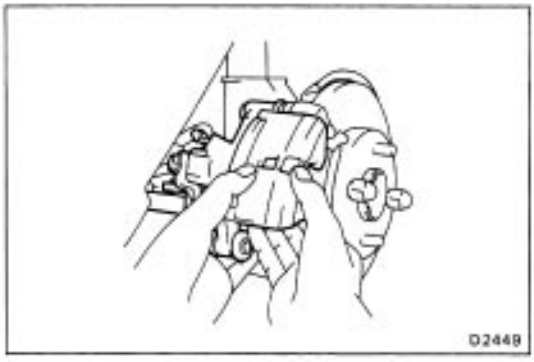

3. INSTALL CYLINDER ONTO MAIN PIN

Install the cylinder onto the main pin.

HINT: Make sure that the boot end is installed into the groove of the main pin.

4. CONNECT PARKING BRAKE CABLE

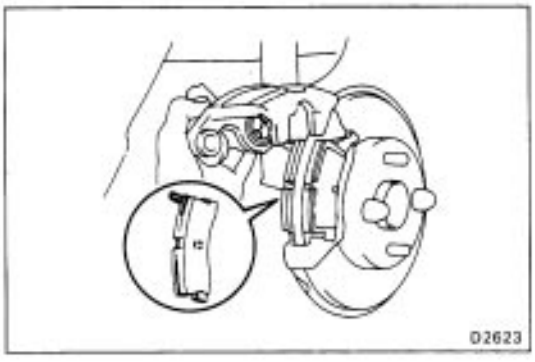

5. INSTALL CYLINDER

(a) Fit the pad protrusion into the piston stopper groove, and install the cylinder.

HINT: Insert the cylinder carefully so the boot is not wedged.

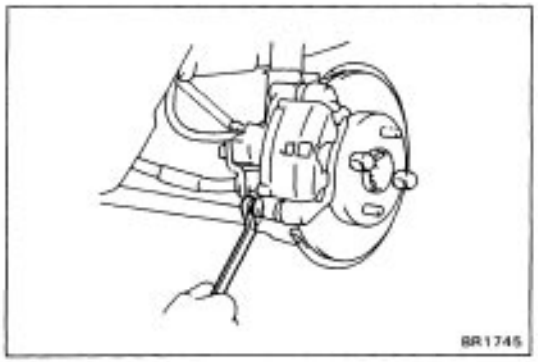

(b) Install the cylinder installation bolt and torque the bolt.
Torque: 200 kg–cm (14 ft–lb, 20 N – m)
(c) Install the parking brake cable clip.

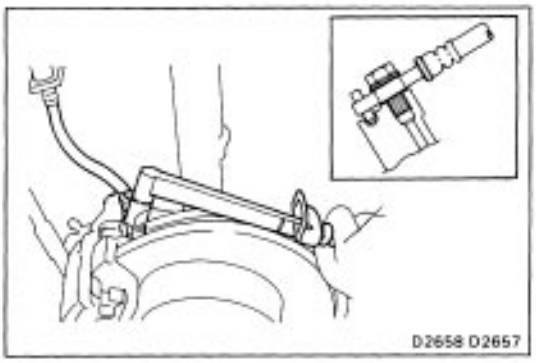

6. CONNECT BRAKE HOSE
Install the brake hose in position, and tighten the union bolt through new gaskets.
Torque: 310 kg–cm (22 ft–lb, 30 N–m)

7. FILL BRAKE RESERVOIR WITH BRAKE FLUID AND BLEED BRAKE SYSTEM (See page BR–7)

8. CHECK FOR FLUID LEAKAGE

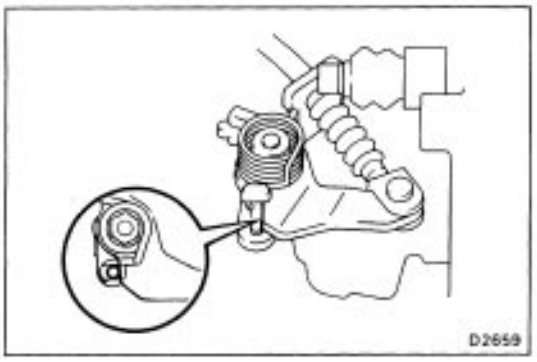

9. ADJUST PARKING BRAKE LEVER TRAVEL
(a) Pull up the parking brake lever for a few times.
(b) Release the parking brake lever.
(c) Depress the brake pedal several times and adjust the rear brake automatically.
(d) Check that the parking brake crank touches the stopper pin.

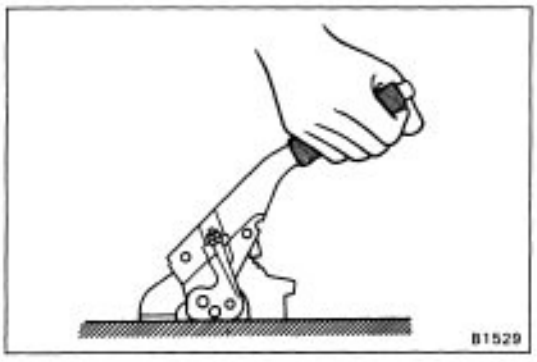

(e) Pull the parking brake lever all the way up, and count the number of clicks.
Parking brake lever travel at 20 kg (44.1 lb, 196N): 5 – 8 clicks
(f) If necessary, adjust parking brake lever travel.
(See page BR–8)

PROPORTIONING VALVE (P VALVE)

CHECK OF FLUID PRESSURE

1. CONNECT FLUID PRESSURE GAUGE TO P VALVE

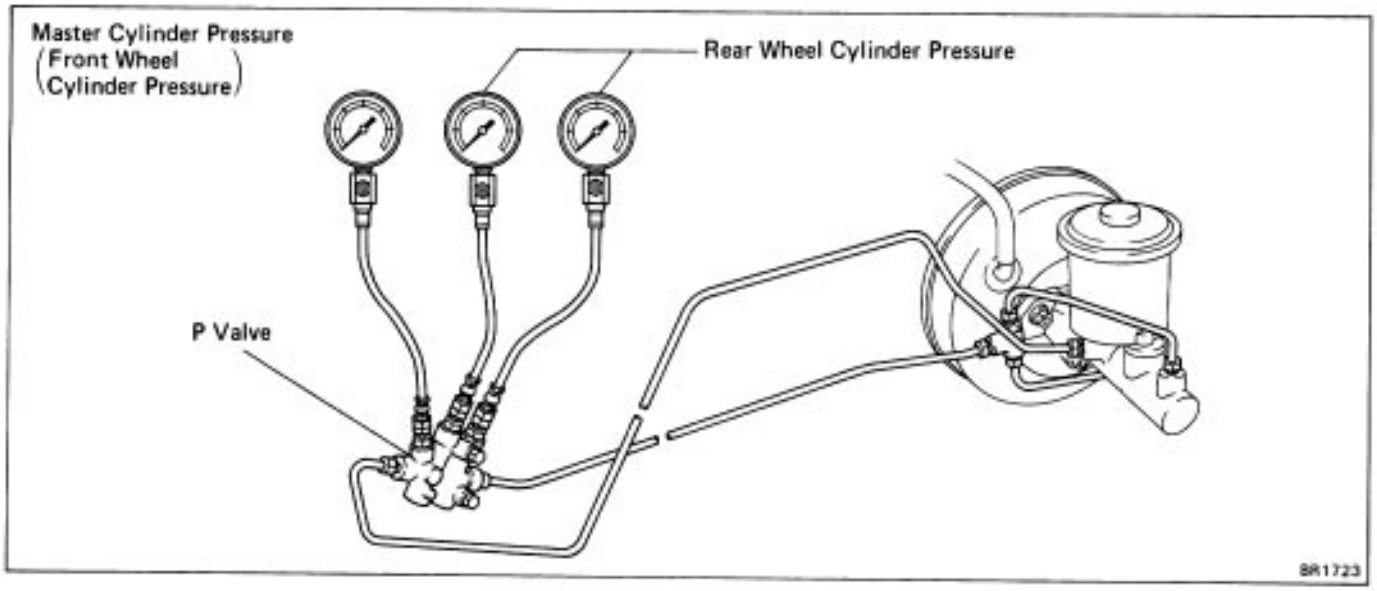

2. BLEED AIR FROM FLUID PRESSURE GAUGE

3. RAISE MASTER CYLINDER PRESSURE AND CHECK REAR WHEEL CYLINDER PRESSURE

Specifications

	Master cylinder pressure	Rear wheel cylinder pressure
4A–G E	20 kg/cm² (284 psi, 1,961 kPa)	20 kg/cm² (284 psi, 1,961 kPa)
	80 kg/cm² (1,138 psi, 7,845 kPa)	42.2 kg/cm² (600 psi, 4,138 kPa)
4A–FE	35 kg/cm² (498 psi, 3,432 kPa)	35 kg/cm² (498 psi, 3,432 kPa)
	80 kg/cm² (1,138 psi, 7,845 kPa)	51.7 kg/cm² (735 psi, 5,070 kPa)

If the rear wheel cylinder pressure is incorrect, replace the P valve assembly.

4. BLEED BRAKE SYSTEM

5. CHECK FLUID LEAKAGE

SERVICE SPECIFICATIONS

SST AND SSM

SST (Special Service Tools)

Section / Part Name / Part No. / Illustration			EM	FI	CO	LU	IG	ST	CH	CL	MT	AT	PR	SA Front	SA Rear	BR	SR	BO
	09027-12140	Angled Open End Wrench 12 x 14 mm				*1 ●												
	09032-00100	Oil Pan Seal Cutter				●												
	09043-38100	Hexagon 10 mm Wrench									●	*2 ●						
	09201-41020	Valve Stem Oil Seal Replacer	*3 ●					*4 ●										
	09201-60011	Valve Guide Bushing Remover & Replacer									*5 ●	*5 ●						
	09201-70010	Valve Guide Bushing Remover & Replacer	●															
	09202-70010	Valve Spring Compressor	●															
	09205-16010	Cylinder Head Bolt Wrench	●															
	09213-14010	Crankshaft Pulley Holding Tool	*3 ●															
	09213-31021	Crankshaft Pulley Puller	●															
	09213-36020	**Timing Gear Re-mover**									*6 ●							
	09213-70010	Crankshaft Pulley Holding Tool	*1 ●															

Remarks:
*1 4A–GE only
*2 A131L only
*3 4A–FE only
*4 Armature front bearing (1.4 kW type only)
*5 Speedometer driven gear oil seal
*6 No. 3 clutch hub (C50, C52 only)

SST (Special Service Tools) (Cont'd)

Section / Part Name / Part No. / Illustration			EM	FI	CO	LU	IG	ST	CH	CL	MT	AT	PR	SA Front	SA Rear	BR	SR	BO
	09218-46010	Cylinder Liner Remover & Replacer									●			*1 ●				
	09221-25024	Piston Pin Remover & Replacer	●															
	(09221-00020)	(Body)	*2 ●															
	(09221-00030)	(Spring)	*2 ●															
	(09221-00050)	(Bushing "B")	*2 ●															
	(09221-00130)	(Guide "G")	*2 ●															
	(09221-00140)	(Guide "H")	*2 ●															
	09222-30010	Connecting Rod Bushing Remover & Replacer	*3 ●															
	09223-15010	Crankshaft Rear Oil Seal Replacer										*4 ●		*4 ●				
	09223-41020	Crankshaft Rear Oil Seal Replacer	●															
	09223-46011	Crankshaft Front Oil Seal Replacer	*5 ●															
	09223-50010	Crankshaft Front Oil Seal Replacer	*6 ●															

Remarks:
*1 Front axle hub dust deflector
*2 4A–FE only
*3 4A–GE only
*4 Side gear shaft oil seal
*5 Camshaft oil seal (4A–FE only)
*6 Camshaft oil seal (4A–GE only)

SST (Special Service Tools) (Cont'd)

Section / Part Name / Part No. / Illustration			EM	FI	CO	LU	IG	ST	CH	CL	MT	AT	PR	SA Front	SA Rear	BR	SR	BO
	09226-10010	Crankshaft Front & Rear Bearing Replacer										●*1						
	09228-06500	Oil Filter Wrench				●												
	09230-00010	Radiator Service Tool Set			●													
	09240-00020	Wire Gauge Set										●						
	09248-55010	Valve Clearance Adjust Tool Set	●															
	09268-41045	Injection Measuring Tool Set		●														
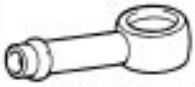	(09268-41080)	(No. 6 Union)		●														
	(09268-41090)	(No. 7 Union)		●														
	(90405-09015)	(No. 1 Union)		●														
	09268-45012	EFI Fuel Pressure Gauge		●														
	09285-76010	Injection Pump Camshaft Bearing Cone Replacer						●*2	●*3									
	09286-46011	Injection Pump Spline Shaft Puller						●*4	●*5									

Remarks:
*1 4WD only
*2 Armature front bearing (1.0 kW type only)
*3 Rotor bearing
*4 Armature bearing
*5 Rear end frame

SST (Special Service Tools) (Cont'd)

Section / Part Name / Part No. / Illustration			EM	FI	CO	LU	IG	ST	CH	CL	MT	AT	PR	SA Front	SA Rear	BR	SR	BO
	09301-17010	Clutch Guide Tool								*1 ●								
	09301-32010	Clutch Guide Tool								*2 ●								
	09307-12010	Extension Housing Bushing Replacer									●							
	09308-00010	Oil Seal Puller									*3 ●	●		●	●			
	09308-10010	Oil Seal Puller													●			
	09309-12020	5th Driven Gear Replacer									*2 ●							
	09309-36010	Transmission Rear Bearing Replacer									●							
	09309-37010	Transmission Bearing Replacer	*4 ●															
	09310-17010	Transaxle Gear Remover & Replacer									●							
	(09310-07010)	(Plate)									●							
	(09310-07020)	(Center Bolt)									●							
	(09310-07030)	(Set Bolt)									●							

Remarks:
*1 4WD only
*2 2WD only
*3 Input shaft front bearing and output shaft front bearing
*4 Crankshaft front oil seal

SST (Special Service Tools) (Cont'd)

Section / Part Name / Part No. / Illustration			EM	FI	CO	LU	IG	ST	CH	CL	MT	AT	PR	SA Front	SA Rear	BR	SR	BO
	(09310-07040)	(Claw)									●							
	(09310-07050)	(Adaptor)									●							
	09310-35010	Countershaft Bearing Replacer									*1 ●			*2 ●				
	09313-30021	Detent Ball Plug Socket									●		●					
	09316-12010	Transfer Bearing Replacer										*3 ●						
	09316-20011	Transfer Bearing Replacer									*3 ●	*3 ●						
	09316-60010	Transmission & Transfer Bearing Replacer									●	●		●				
	(09316-00010)	(Replacer Pipe)									*3 ●	●		*4 ●				
	(09316-00020)	(Replacer "A")									*3 ●			*4 ●				
	(09316-00030)	(Replacer "B")										*3 ●						
	(09316-00040)	(Replacer "C")									*3 ●	*3 ●						
	(09316-00060)	(Replacer "E")									*3 ●	*3 ●						

Remarks:
*1 Input shaft front bearing and output shaft front bearing (2WD only)
*2 Front axle hub
*3 4WD only
*4 Front axle hub bearing

SST (Special Service Tools) (Cont'd)

Section / Part Name / Part No. / Illustration			EM	FI	CO	LU	IG	ST	CH	CL	MT	AT	PR	SA Front	SA Rear	BR	SR	BO
	(09316-00070)	(Replacer "F")									●*1							
	09318-12010	Transfer Bearing Adjusting Nut Wrench										●						
	09318-20010	Transfer Side Bearing Adjusting Nut Wrench									●*1							
	09325-20010	Transmission Oil Plug									●	●*1	●				●*1	
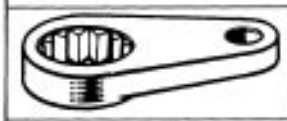	09326-20011	Output Shaft Bearing Lock Nut Wrench										●*1						
	09330-00021	Companion Flange Holding Tool	●*2									●	●		●			
	09333-00013	Clutch Diaphragm Spring Aligner								●								
	09350-32014	TOYOTA Automatic Transmission Tool Set									●	●		●				
	(09308-10010)	(Oil Seal Puller)										●						
	(09351-32010)	One–way Clutch Test Tool										●						
	(09351-32020)	(Stator Stopper)										●						
	(09351-32032)	Counter Driven Gear Holding Tool										●						

Remarks:
*1 4WD only
*2 Crankshaft pulley holding tool

SST (Special Service Tools) (Cont'd)

Section / Part Name / Part No. / Illustration			EM	FI	CO	LU	IG	ST	CH	CL	MT	AT	PR	SA		BR	SR	BO
														Front	Rear			
	(09351-32040)	No. 1 Piston Spring compressor										●						
	(09351-32050)	(Snap Ring Expander)										●						
	(09351-32061)	(Oil Pump Puller)										●						
	(09351-32070)	No. 2 Piston Spring compressor										●						
	(09351-32090)	Oil Seal Remover & Replacer										●						
	(09351-32100)	Drive Pinion Bearing Replacer										●						
	(09351-32111)	Side Bearing Race Replacer									*1 ●	●		●				
	(09351-32120)	Overdrive Bearing Replacer										●						
	(09351-32130)	(Handle)									●	●		●				
	(09351-32140)	(Oil Seal Replacer)										●						
	(09351-32150)	(Oil Seal Replacer)									*2 ●	●		●				
	(09351-32170)	(Lock Nut Wrench)										●						

Remarks:
* 1 LH side oil seal
*2 R H side oil seal

SST (Special Service Tools) (Cont'd)

Section / Part Name / Part No. / Illustration			EM	FI	CO	LU	IG	ST	CH	CL	MT	AT	PR	SA Front	SA Rear	BR	SR	BO
	(09351-32180)	(Bearing Replacer)										●						
	(09351-32190)	(Measure Terminal)										●						
	09502-10012	Differential Side Bearing Puller										●						
	09502-12010	Differential Bearing Replacer										●						
	09504-00011	Differential Side Bearing Adjusting Nut Wrench													●			
	09506-30012	Differential Drive Pinion Bearing Cone Replacer									*1 ●				●			
	09506-35010	Differential Drive Pinion Rear Bearing Replacer									*1 ●	*1 ●						
	09515-21010	Rear Axle Shaft Bearing Replacer													●		*2 ●	
	09517-12010	Rear Axle Shaft Oil Seal Replacer													●			
	09520-00031	Rear Axle Shaft Puller													●			
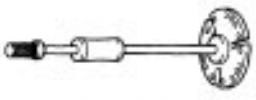	09520-32012	Differential Side Gear Shaft Puller										*1 ●						
	09527-21011	Rear Axle Shaft Bearing Remover													●			

Remarks:
*1 4WD only
*2 Control valve housing bushing and bearing (TOYOTA type PS)

SST (Special Service Tools) (Cont'd)

Section / Part Name / Part No. / Illustration			EM	FI	CO	LU	IG	ST	CH	CL	MT	AT	PR	SA Front	SA Rear	BR	SR	BO
	09550-10012	Replacer Set "B"	●								●				●			
	(09252-10010)	(No. 1 Replacer Handle)													●			
	(09552-10010)	(No. 2 Replacer Handle)	*1 ●								*2 ●				*3 ●			
	(09554-10010)	Differential Drive Pinion Oil Seal Replacer													*3 ●			
	(09555-10010)	Differential Drive Pinion Rear Bearing Replacer									*2 ●				*3 ●			
	(09556-10010)	Differential Drive Pinion Front Bearing Remover													●			
	(09558-10010)	Rear Axle Shaft Oil Seal Replacer													*3 ●			
	(09560-10010)	Knuckle Outer Bearing Replacer	*1 ●												●			
	09554-22010	Differential Oil Seal Replacer													●			
	09555-55010	Differential Drive Pinion Bearing Replacer									*2 ●	●						
	09556-22010	Drive Pinion Front Bearing Remover													●			
	09557-22022	Companion Flange Remover & Replacer											●		●			

Remarks:
*1 Spark plug tube gasket (4A–FE only)
*2 4WD only
*3 Rear hub bearing

SST (Special Service Tools) (Cont'd)

Section / Part Name / Part No. / Illustration			EM	FI	CO	LU	IG	ST	CH	CL	MT	AT	PR	SA Front	SA Rear	BR	SR	BO
	(09557-22030)	(No. 1 Bolt)													●			
	(09557-22050)	(No. 3 Bolt)											●					
	09564-32011	Differential Preload Adapter									●*1	●*1						
	09605-60010	Steering Knuckle Bearing Cup Replacer												●*2				
	09608-10010	Steering Knuckle Oil Seal Replacer												●				
	09608-12010	Front Hub & Drive Pinion Bearing Replacer Set									●							
	(09608-00020)	Remover & Replacer Handle									●							
	(09608-00070)	(Drive Pinion Rear Bearing Cone Replacer									●*3							
	(09608-00080)	(Differential Side Bearing Cone Replacer									●*4							
	09608-16041	Front Hub Bearing Adjusting Tool												●				
	(09608-02020)	(Bolt & Nut)												●				
	(09608-02040)	(Retainer)												●				

Remarks:
*1 2WD only
*2 Front axle hub bearing
*3 Input shaft rear bearing and output shaft rear bearing
*4 Input shaft front oil seal

SST (Special Service Tools) (Cont'd)

Illustration	Part No.	Part Name	EM	FI	CO	LU	IG	ST	CH	CL	MT	AT	PR	SA Front	SA Rear	BR	SR	BO
	09608-20012	Front Hub & Drive Pinion Bearing Tool Set							●		●							
	(09608-00030)	(Replacer)							●									
	(09608-00080)	(Replacer)									●*1							
	(09608-03020)	(Handle)									●*2							
	(09608-03090)	(Replacer)									●*2							
	09608-30012	Front Hub & Drive Pinion Bearing Tool Set													●			
	(09608-00060)	Drive Pinion Front Bearing Cup Replacer													●			
	(09608-04020)	(Handle)													●			
	(09608-04030)	Front Hub Inner Bearing Cone Replacer													●			
	(09608-04100)	Drive Pinion Front Bearing Cup Replacer													●*3			
	09608-30022	Front Hub Bearing Replacer Set										●						
	(09550-00050)	Replacer										●*4						

Remarks:
*1 Control shaft cover oil seal
*2 LH, RH side bearing outer– race
*3 Rear axle hub bearing
*4 4WD only

SST (Special Service Tools) (Cont'd)

Section / Part Name / Part No. / Illustration			EM	FI	CO	LU	IG	ST	CH	CL	MT	AT	PR	SA Front	SA Rear	BR	SR	BO
	(09608-05010)	(Handle)										*1 ●						
	09608-32010	Steering Knuckle Oil Seal Replacer										*1 ●		*2 ●				
	09608-35014	Axle Hub & Drive Pinion Bearing Tool Set									●	●		●				
	(09608-06020)	(Handle)									*1 ●	*1 ●		●				
	(09608-06120)	Front Hub Outer Bearing Cup Replacer										*1 ●						
	(09608-06150)	Rear Hub Outer Bearing Cup Replacer										*1 ●						
	(09608-06160)	Rear Hub Inner Bearing Cup Replacer									*1 ●							
	(09608-06180)	Drive Pinion Rear Bearing Cup Replacer										*1 ●						
	(09608-06210)	Rear– Axle Bearing Replacer									*1 ●							
	09609-20011	Steering Wheel Puller															●	
	09610-55012	Pitman Arm Puller															*3 ●	
	09611-22012	Tie Rod End Puller												●				

Remarks:
*1 4WD only
*2 Side gear shaft oil seal
*3 Tie rod end

SST (Special Service Tools) (Cont'd)

Section / Part Name / Part No. / Illustration			EM	FI	CO	LU	IG	ST	CH	CL	MT	AT	PR	SA Front	SA Rear	BR	SR	BO
	09612-00012	Rack & Pinion Steering Rack Housing Stand															●	
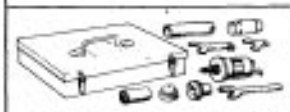	09612-10093	Steering Gear Housing Overhaul Tool Set															●	
	(09617-10010)	Steering Pinion Bearing Adjusting Screw Lock Nut Wrench															●*1	
	(09628-10020)	(Ball Joint Lock Nut Wrench)															●*2	
	09612-10131	Hexagon Wrench															●*3	
	09612-22011	Tilt Handle Bearing Replacer									●*4						●*5	
	09612-24014	Steering Gear Housing Overhaul Tool Set															●	
	(09612-10022)	(Hexagon Wrench)															●	
	(09612-10061)	Steering Pinion Bearing Replacer															●*1	
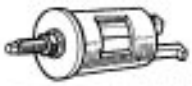	(09613-22011)	Steering Rack Shaft Bushing Puller															●*6	
	(09616-10010)	Steering Pinion Bearing Adjusting Screw															●*1	
	(09616-10020)	Steering Pinion Bearing Adjusting Screw Wrench)															●*1	

Remarks:
*1 Manual gear housing
*2 Rack end
*3 KOYO type PS
*4 No. 3 hub sleeve assembly
*5 Cylinder end stopper, control valve housing oil seal and bearing (PS)
*6 Cylinder end stopper oil seal (KOYO type PS)

SST (Special Service Tools) (Cont'd)

Section / Part Name / Part No. / Illustration			EM	FI	CO	LU	IG	ST	CH	CL	MT	AT	PR	SA Front	SA Rear	BR	SR	BO
	(09617-24011)	(Steering Rack Wrench)															●	
	(09617-24020)	(Steering Pinion Bearing Adjusting Screw Lock Nut Wrench)															*1 ●	
	09612-65014	Steering Worm Bearing Puller									●	●					●	
	(09612-01020)	(Claw "6")									*2 ●							
	(09612-01030)	(Claw "C")															*3 ●	
	(09612-01040)	(Claw "D")									*2 ●							
	(09612-01060)	(Claw "E")									*4 ●							
	09613-12010	Power Steering Control Valve Puller															*3 ●	
	09616-00010	Steering Worm Bearing Adjusting Socket															●	
	09616-22010	Steering Worm Bearing Adjusting Screw Wrench															*5 ●	
	09617-12020	Rack Guide Cap Lock Nut Wrench															*3 ●	
	09617-12030	Rack Guide Lock Nut Wrench															*6 ●	

Remarks:
*1 Rack guide spring cap lock nut (Manual gear housing)
*2 Input front bearing (4WD only)
*3 TOYOTA type PS
*4 4WD only
*5 Drive pulley (4A–FE)
*6 KOYO type PS

SST (Special Service Tools) (Cont'd)

Section / Part Name / Part No. / Illustration			EM	FI	CO	LU	IG	ST	CH	CL	MT	AT	PR	SA Front	SA Rear	BR	SR	BO
	09620-30010	Steering Gear Box Replacer Set									●						●	
	(09627-30010)	Steering Sector Shaft Bushing Replacer									*1 ●							
	(09631-00020)	(Handle)									*1 ●						*2 ●	
	09628-10011	Ball Joint Puller												*3 ●				
	09628-62011	Ball Joint Puller												●				
	09630-24013	Steering Rack Oil Seal Tool Set															●	
	(09620-24010)	Valve Cup Oil Seal Remover															*2 ●	
	(09620-24020)	Valve Cup Oil Seal Replacer															*2 ●	
	(09631-24020)	(Piston Ring Guide)															*2 ●	
	(09631-24030)	(Piston Ring Tool)															*2 ●	
	09631-10010	Steering Rack Replacer "D"															*4 ●	
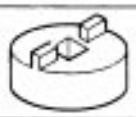	09631-10021	Rack Stopper Wrench															*2 ●	

Remarks:
*1 4WD only
*2 KOYO type PS
*3 Front axle hub bolt
*4 Manual gear housing

SST (Special Service Tools) (Cont'd)

Section / Part Name / Part No. / Illustration			EM	FI	CO	LU	IG	ST	CH	CL	MT	AT	PR	SA Front	SA Rear	BR	SR	BO
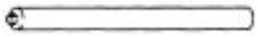	09631-12020	Handle															●	
	09631-12031	Oil Seal "A" Remover															●	
	09631-12040	Oil Seal "A" Replacer															●	
	09631-12070	Steering Rack Oil Seal Test Tool															●	
	09631-16020	Steering Rack Cover "A"															●	
	09631-20031	Oil Seal "B" Remover															●*1	
	09631-20070	Seal Ring Guide															●	
	09631-20081	Seal Ring Tool															●	
	09631-22020	Power Steering Hose Nut 14 x 17 Wrench Set		●													●	
	09633-00020	Power Steering Hose Nut Wrench															●	
	09703-30010	Brake Shoe Return Spring Tool														●		
	09710-14012	Rear Suspension Bushing Tool Set												●	●			

Remark:
* 1 KOYO type PS

SST (Special Service Tools) (Cont'd)

Section / Part Name / Part No. / Illustration			EM	FI	CO	LU	IG	ST	CH	CL	MT	AT	PR	SA		BR	SR	BO
														Front	Rear			
	(09710-00030)	(Replacer)													●			
	(09710-00040)	(Pipe)													●			
	(09710-00050)	(Handle)												●*1	●			
	09718-00010	Shoe Hold Down Spring Driver														●		
	09719-14020	Rear Disc Brake Tool Set														●		
	(09719-00020)	(Piston Driver)														●		
	09720-00012	Shock Absorber Overhaul Tool Set												●				
	(09721-00071)	Front Shock Absorber Ring Nut Wrench												●				
	09727-30020	Coil Spring Compressor												●	●			
	09729-22031	Front Spring Upper Seat Holder												●	●*2			
	09737-00010	Brake Booster Push Rod Gauge														●		
	09751-36011	Brake Tube Union Nut 10x 12 mm Wrench								●					●	●		

Remarks:
*1 Transaxle side gear shaft oil seal, front axle hub oil seal and steering knuckle oil seal
*2 Rear spring upper seat holder

SST (Special Service Tools) (Cont'd)

Section / Part Name / Part No. / Illustration			EM	FI	CO	LU	IG	ST	CH	CL	MT	AT	PR	SA Front	SA Rear	BR	SR	BO
	09756-00010	Adjusting Bolt Guide Nut														●		
	09804-24010	Luggage Compartment Door Torsion Bar Tool																●
	09806-30010	Windshield Moulding Remover																●
	09812-00010	Door Hinge Set Bolt Wrench																●
	09814-22010	Rear Wiper Pivot Shaft Lock Nut Wrench																*1 ●
	09820-00021	Alternator Rear Bearing Puller							●									
	09820-63010	Alternator Pulley Set Nut Wrench Set							●									
	09842-30055	Wire "G" EFI Inspection		●														
	09842-30070	Wire "F" EFI Inspection		●														
	09843-18020	Diagnosis Check Wire		●			●											
	09910-00015	Puller Set.									●						●	
	(09911-00011)	(Puller Clamp)									●						*2 ●	

Remarks:
*1 4WD wagon only
*2 Tilt steering column only

SST (Special Service Tools) (Cont'd)

Section / Part Name / Part No. / Illustration		EM	FI	CO	LU	IG	ST	CH	CL	MT	AT	PR	SA Front	SA Rear	BR	SR	BO
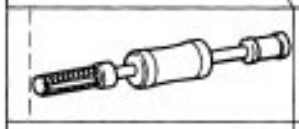	(09912-00010) Puller Slide Hammer)									●						*1 ●	
	09921-00010 Spring Tension Tool									*2 ●	*2 ●						
	09950-00020 Bearing Remover									●	●			●			
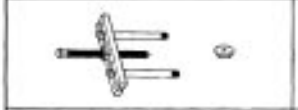	09950-00030 Bearing Remover Attachment										*3 ●						
	09950-20017 Universal Puller									●			●	●		●	
	09992-00094 Oil Pressure Gauge Set										●						

Remarks:
*1 Tilt steering column only
*2 Speedometer driven gear oil sea!
*3 4WD only

NOTE: For reference to SSTs for the Air Conditioning System see page **AC–9**.

SSM (SPECIAL SERVICE MATERIALS)

Part Name	Part No.	Sec.	Use etc.
Sea! packing or– equivalent	08826-00080	EM	Cylinder head cover Camshaft bearing cap No. 1 Half circle plug (for 4A–FE)
		LU	Oil pan Oil pan baffle plate (for– 4A–GE)
Seal packing 1281, Three bond 1281 or equivalent	08826-00090	MT	Transmission case Control shaft cover Transfer case Transfer inspection hole cover Transfer right case Transaxle case and transmission case cover
		AT	Transfer left case x Differential lock control cover Transfer left case x Right case Transfer left case x Inspection hole cover
Seal packing No. 1282–B or equivalent	08826-00100	EM	Water inlet housing (for 4A–FE) Water outlet pipe (for 4A–FE)
Adhesive 1324, Three bond 1324 or equivalent	08833-00070	MT	Rear bearing retainer set bolt Differential intermediate No. 1 case mounting screw Reverse idler gear shaft lock bolt
		AT	(A240L) Oil gallery cover set screw (A131L) Differential bearing retainer set bolt Differential carrier cover set bolt (A241H) Oil gallery cover tighten bolts Torque converter mounting bolts
		BO	Sun roof guide rail cover set bolt Sun roof drive motor set bolt
Adhesive 1344, Three bond 1344, Loctite 242 or equivalent	08833-00080	EM	Union (for 4A–GE)
		CO	Engine drain plug
		LU	Oil pressure switch (for 4A–FE) oil pressure sender gauge (for 4A–GE)
		MT	Straight screw plug Transmission case cover set bolt Transmission case set bolt Transaxle case set bolt Transfer case set bolt Transfer right case set bolt Shift and select lever shaft assembly set bolt Control shaft cover

SSM (SPECIAL SERVICE MATERIALS) (Cont'd)

Part Name	Part No.	Sec.	Use etc.
Adhesive 1344, Three bond 1344, Loctite 242 or equivalent	08833-00080	AT	Transaxle housing tighten bolts
		SR	Pinion bearing adjusting screw Pinion bearing adjusting screw lock nut Rack guide spring cap Rack guide spring cap lock nut Rack housing cap
Adhesive 1131, Three bond 1131, Loctite 518 or equivalent	08833-00090	AT	(A240 L) Transaxle housing x Transaxle case Transaxle case x Rear cover (A241 H) Transaxle housing x Transaxle case Transaxle case x Rear cover Transaxle housing x Transfer assembly
Dupont paste No. 4817	–	BE	Rear window defogger wire
Side protection moulding adhesive	08850-00051	BO	Side protection moulding
Windshield glass adhesive set No. 15	08850-00070	BO	(0 – 15˚C or 32 – 59˚F) Windshield glass Rear window glass Back door glass
Windshield glass adhesive set No. 35	08850-00080	BO	(15–35˚C or 59–95˚ F) Windshield glass Rear window glass Back door glass
Windshield glass adhesive set No. 45	08850-00090	BO	(35 – 45˚C or– 95 – 11˚F) Windshield glass Rear window glass Back door glass
Dam kit	04562-30030	BO	Windshield glass Rear window glass Back door glass
Butyl tape set	08850-00065	BO	Quarter window glass Sun roof
Three cement black	08833-00030	BO	Windshield glass Rear window glass Back door glass

NOTE: For reference to SSMs for the Air–Conditioning System see page AC–9.

CHARGING SYSTEM

PRECAUTIONS

1. Check that the battery cables are connected to the correct terminals.
2. Disconnect the battery cables when the battery is given a quick charge.
3. Do not perform tests with a high voltage insulation resistance tester.
4. Never disconnect the battery while the engine is running.

TROUBLESHOOTING

Problem	Possible cause	Remedy	Page
Discharge warning light does not light with ignition ON and engine off	Fuse blown	Check ”CHARGE” and ”IGN” fuses	
	Light burned out	Replace light	
	Wiring connection loose	Tighten loose connections	
	IC regulator faulty	Replace IC regulator	CH–7
Discharge warning light does not go out with engine running (battery requires frequent recharging)	Drive belt loose or worn	Adjust or replace drive belt	CH–3
	Battery cables loose, corroded or worn	Repair or replace cables	
	Fuse blown	Check ”CHARGE” or ”ENGINE” fuse	
	Fusible link blown	Replace fusible link	
	IC regulator or alternator faulty	Check charging system	CH–4
	Wiring faulty	Repair wiring	

ON–VEHICLE INSPECTION

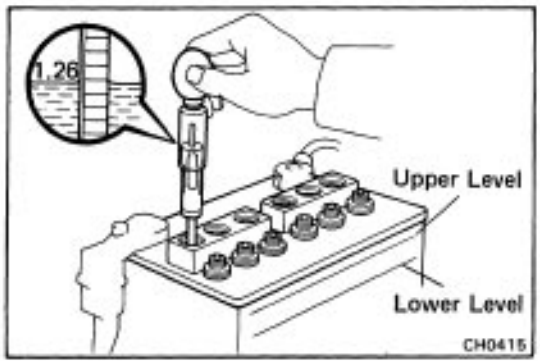

1. INSPECT BATTERY SPECIFIC GRAVITY AND ELECTROLYTE LEVEL

(a) Check the specific gravity of each cell.

Standard specific gravity:

1.25 – 1.27 when fully charged at 20˚C (68˚F)

If not within specifications, charge the battery.

(b) Check the electrolyte quantity of each cell.

If insufficient, refill with distilled (or purified) water.

(Delco)

Check the hydrometer.

Green Dot visible: The battery is adequately charged.

Dark (Green Dot not visible): The battery must be charged.

Clear or Light Yellow: Replace the battery.

HINT: There is no need to add water during the entire service life of the battery.

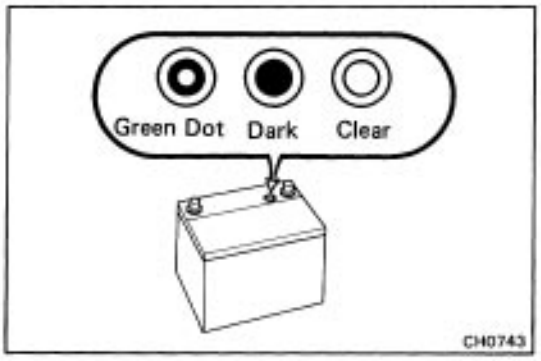

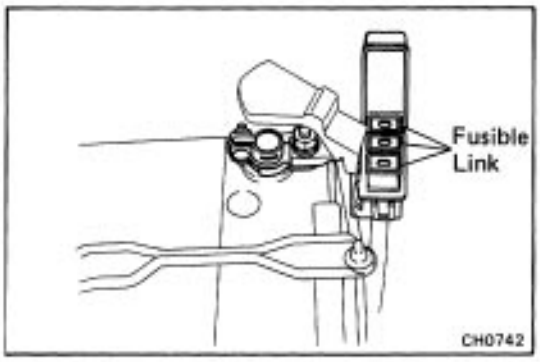

2. CHECK BATTERY TERMINALS AND FUSIBLE LINK

(a) Check that the battery terminals are not loose or corroded.

(b) Check the fusible link for continuity.

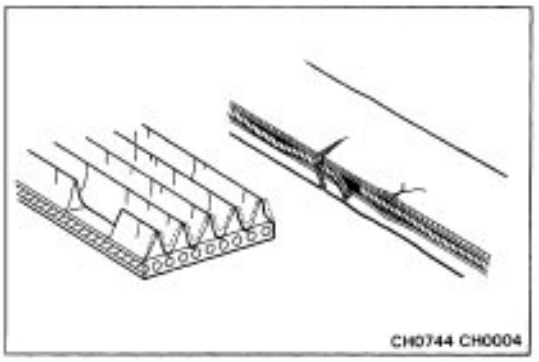

3. INSPECT DRIVE BELT

(a) Visually check the belt for excessive wear, frayed cords etc.

If necessary, replace the drive belt.

HINT: Cracks on the rib side of a belt are considered acceptable. If the belt has chunks missing from the ribs, it should be replaced.

(b) Using a belt tension gauge, check the drive belt tension.

Belt tension gauge:

Nippondenso BTG–20 (95506–00020) or
Borroughs No BT–33–73F

Drive belt tension:

4A–FE

New belt 160 ± 20 lb

Used belt 130 ± 20 lb

4A–GE

New belt 175 ± 5 lb

Used belt 115 ± 20 lb

If necessary, adjust the drive belt tension.

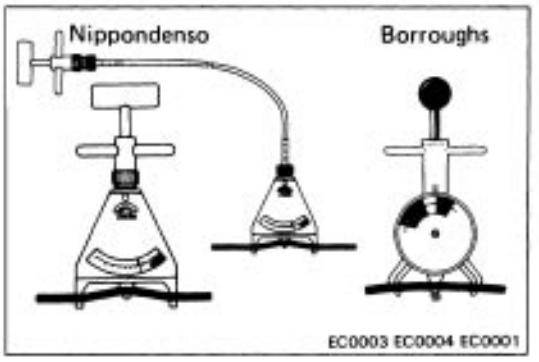

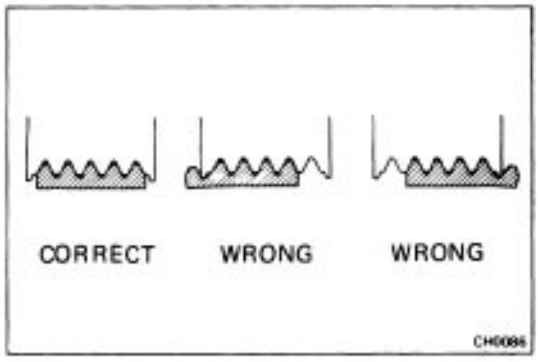

HINT:

- ”New belt” refers to a belt which has been used less than 5 minutes on a running engine.
- ”Used belt” refers to a belt which has been used on a running engine for 5 minutes or more.
- After installing the drive belt, check that it fits properly in the ribbed grooves.
- Check with your hand to confirm that the belt has not slipped out of the groove on the bottom of the crank pulley.
- After installing the belt, run the engine for approx. 5 minutes and recheck the deflection or tension.

4. CHECK FUSES FOR CONTINUITY

ENGINE fuse (7.5 A)
CHARGE fuse (7.5 A)
IGN fuse (10 A)

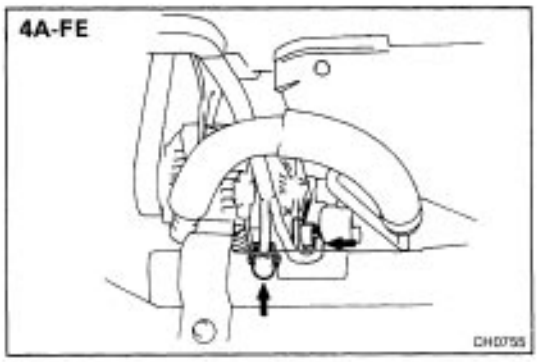

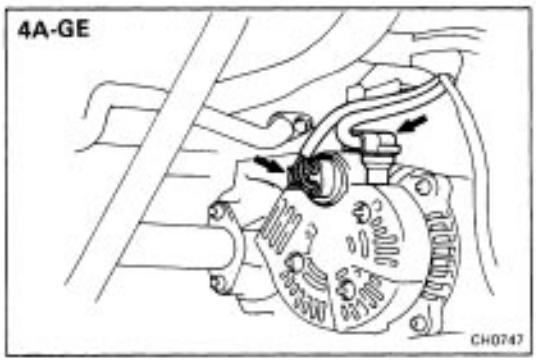

5. VISUALLY CHECK ALTERNATOR WIRING AND LISTEN FOR ABNORMAL NOISES

(a) Check that the wiring is in good condition.
(b) Check that there are no abnormal noises from the alternator while the engine is running.

6. CHECK DISCHARGE WARNING LIGHT CIRCUIT

(a) Warm up the engine and then turn it off.
(b) Turn off all accessories.
(c) Turn the ignition switch to ON. Check that the discharge warning light is lit.
(d) Start the engine. Check that the light goes out.
If the light does not function as specified, troubleshoot the warning light circuit.

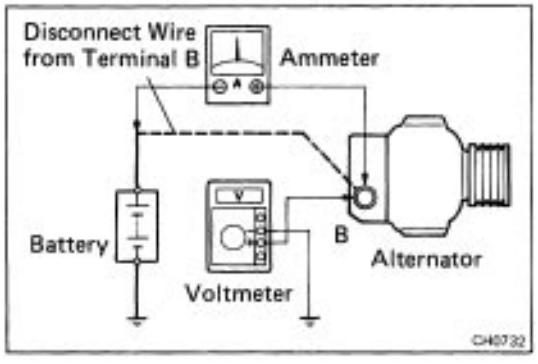

7. CHECK CHARGING CiRCUIT WITHOUT LOAD

H I NT: I f a battery/alternator tester is available, connect the tester to the charging circuit according to the manufacturer’s instructions.

(a) If a tester is not available, connect a voltmeter and ammeter to the charging circuit as follows:

- Disconnect the wire from terminal B of the alternator and connect it to the negative terminal of the ammeter.

- Connect the test lead from the positive terminal of the ammeter to terminal B of the alternator.
- Connect the positive lead of the voltmeter to terminal B of the alternator.
- Connect. the negative lead of the voltmeter to ground.

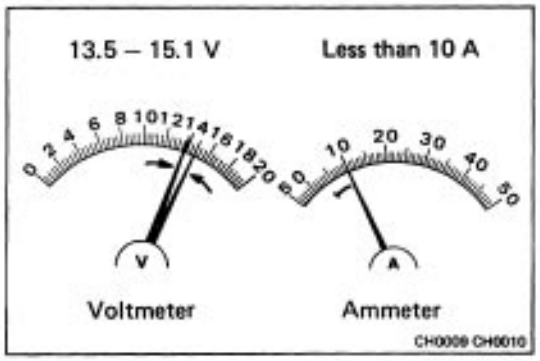

(b) Check the charging circuit as follows:

With the engine running from idling to 2,000 rpm, check the reading on the ammeter and voltmeter.

Standard amperage: Less than 10 A

Standard voltage: 13.9 – 15.1 V at 25˚C (77˚ F)

13.5 – 14.3 V at 115˚ C (239˚ F)

If the voltage reading is greater than standard voltage, replace the I C regulator.

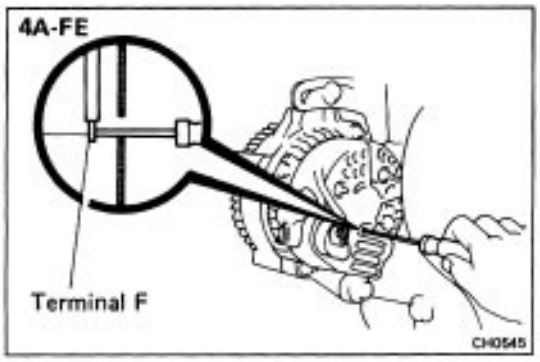

If the voltage reading is less than standard voltage, check the IC regulator and alternator as follows:

- With terminal F grounded, start the engine and check the voltage reading of terminal B.
  If the voltage reading is higher than standard voltage, replace the I C regulator.
- If the voltage reading is less than standard voltage, repair the alternator.

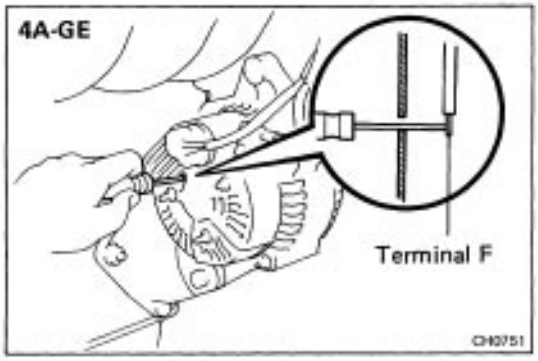

8. CHECK CHARGING CIRCUIT WITH LOAD

(a) With the engine running at 2,000 rpm, turn on the high beam headlights and place the heater fan control switch at Hl.

(b) Check the reading on the ammeter.

Standard amperage: More than 30 A

If the ammeter reading is less than 30 A, repair the alternator. (See page CH–6)

HINT: I f the battery is fully charged, sometimes the indication will be less than 30 A.

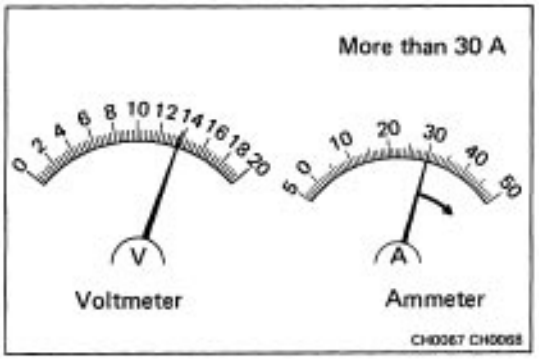

ALTERNATOR

COMPONENTS

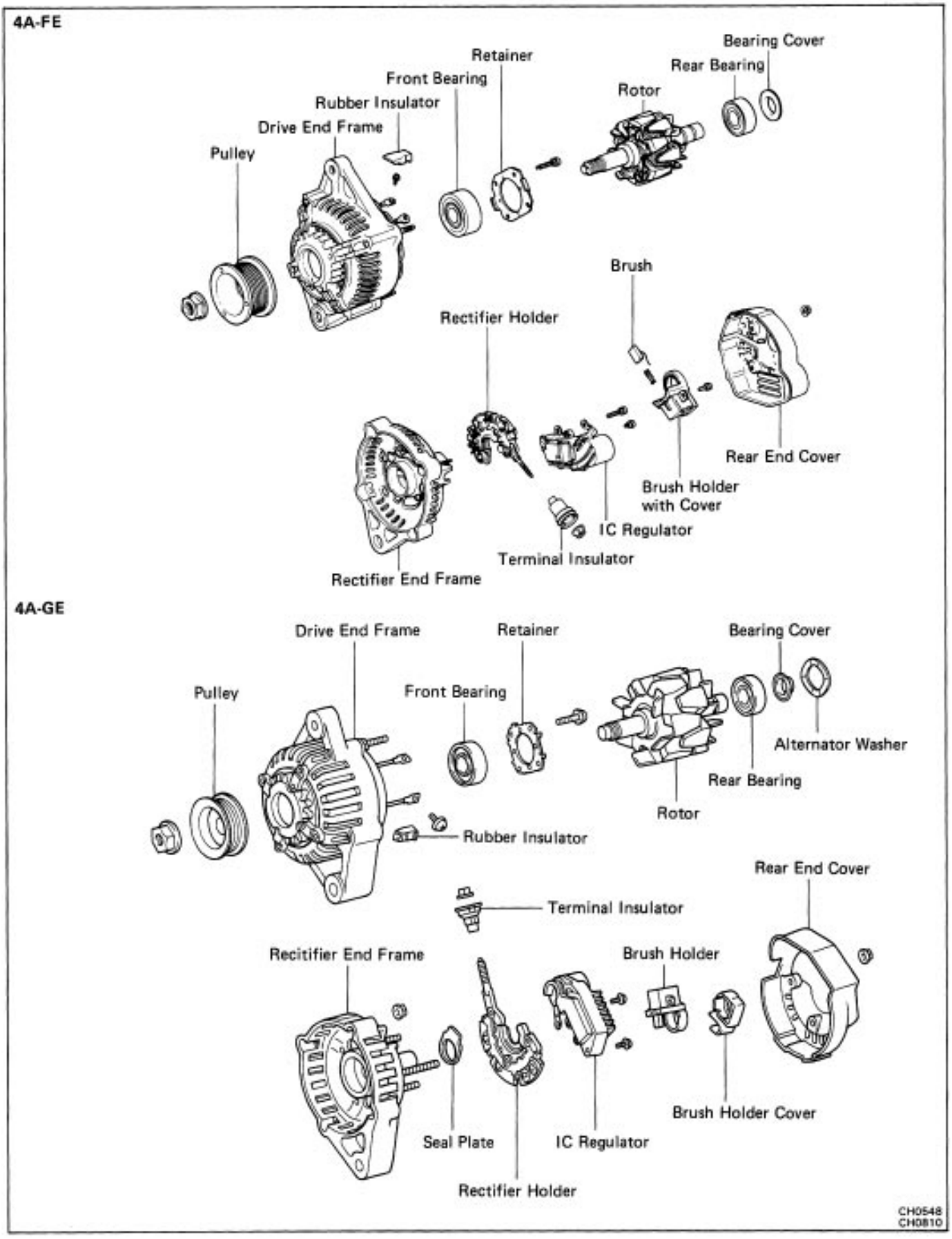

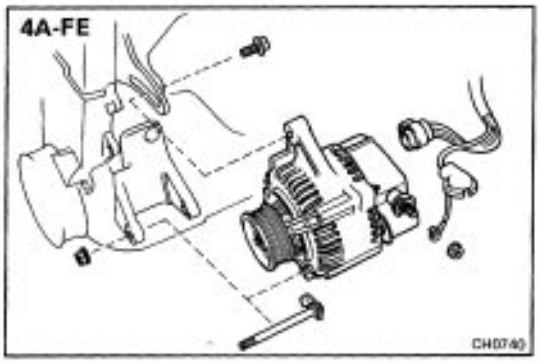

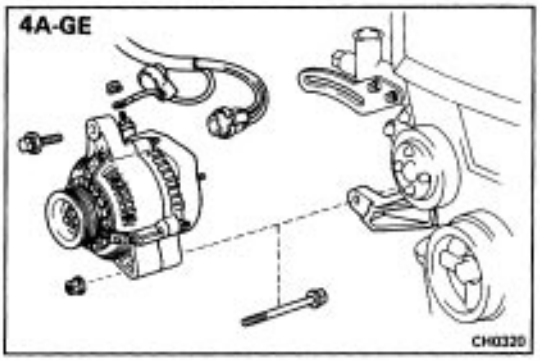

REMOVAL OF ALTERNATOR

1. DISCONNECT CABLE FROM NEGATIVE TERMINAL OF BATTERY

2. DISCONNECT WIRE FROM ALTERNATOR

(a) Disconnect the connector from the alternator.

(b) Remove the nut and wire from the alternator.

3. (4A–GE)

REMOVE PS AND/OR A/C DRIVE BELT

4. REMOVE ALTERNATOR DRIVE BELT

Loosen the alternator pivot, adjusting lock and adjusting bolts, and remove the drive belt.

5. REMOVE ALTERNATOR

(a) Remove the pivot and adjusting lock bolts.

(b) Remove the alternator.

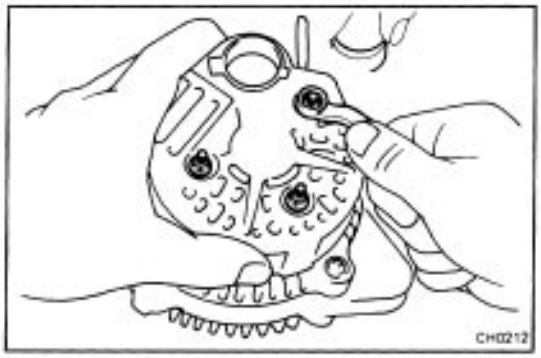

DISASSEMBLY OF ALTERNATOR

(See page CH–6)

1. REMOVE REAR END COVER

(a) Remove the nut and terminal insulator.

(b) Remove the three nuts and end cover.

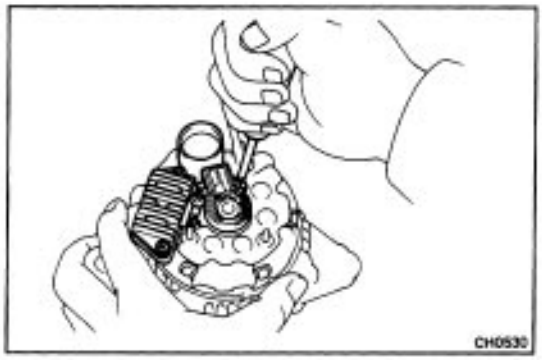

2. REMOVE BRUSH HOLDER AND IC REGULATOR

(a) (4A–G E)

Remove the brush holder cover from the brush holder.

(b) Remove the five screws, brush holder and IC regulator.

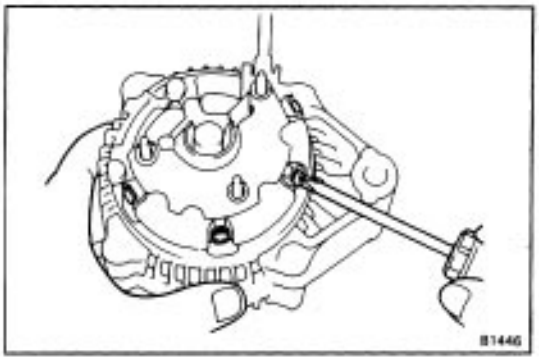

3. REMOVE RECTIFIER HOLDER

Remove the four screws, rectifier holder and rubber, insulators.

4. (4A–G E)

REMOVE SEAL PLATE

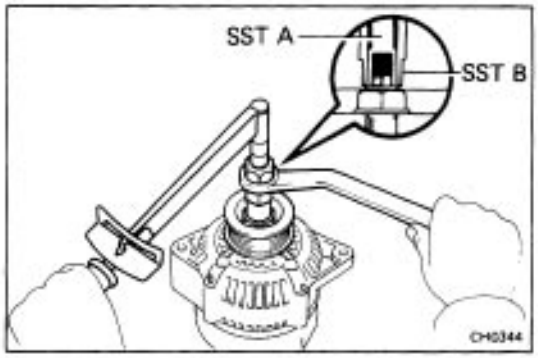

5. REMOVE PULLEY

(a) Hold SST A with a torque wrench and tighten SST6 clockwise to the specified torque.
SST 09820–63010
Torque: 400 kg–cm (29 ft–lb, 39 N–m)

(b) Confirm that SST A is secured to the pulley shaft.

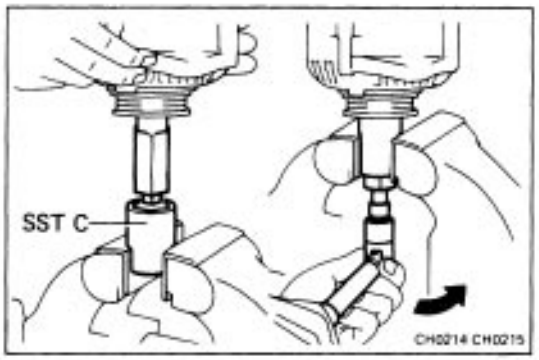

(c) As shown in the figure, grip SST C in a vise and then install the alternator to SST C.

(d) To loosen the pulley nut turn SST A in the direction shown in the figure.

NOTICE: To prevent damage to the rotor shaft, do not loosen the pulley nut more than one–half of a turn.

(e) Remove the alternator from SST C.

(f) Turn SST B and remove all SSTs.

(g) Remove the pulley nut and the pulley.

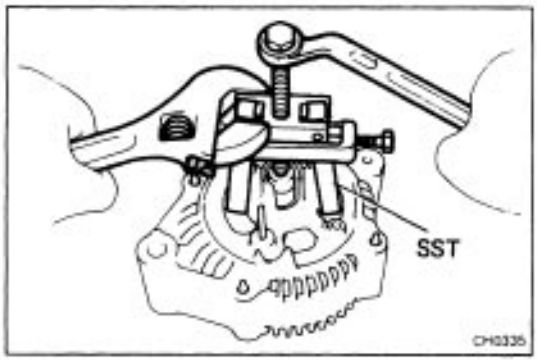

6. REMOVE REAR END FRAME

(a) Remove the four nuts.

(b) Using SST, remove the rear end frame.
SST 09286–46011

7. (4A–GE)
REMOVE ALTERNATOR WASHER

8. REMOVE ROTOR FROM DRIVE END FRAME

INSPECTION AND REPAIR OF ALTERNATOR

Rotor

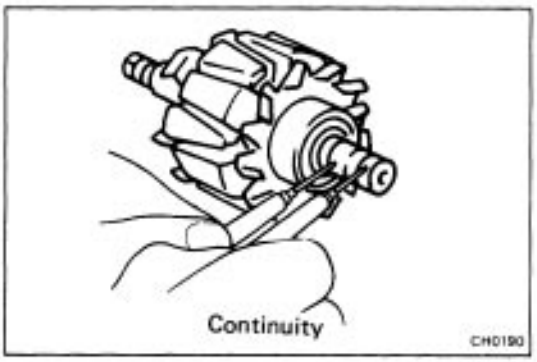

1. INSPECT ROTOR FOR OPEN CIRCUIT

Using an ohmmeter, check for continuity between the slip rings.
Standard resistance: 2.8 – 3.0Ω
If there is no continuity, replace the rotor.

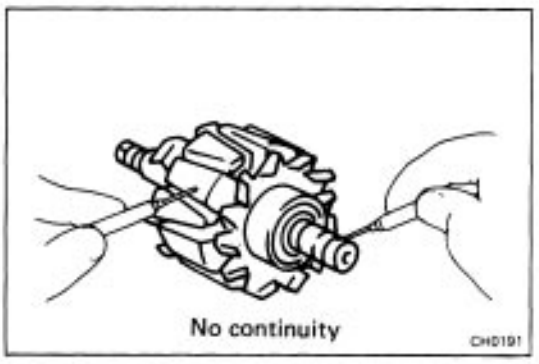

2. INSPECT ROTOR FOR GROUND

Using an ohmmeter, check that there is no continuity between the slip ring and rotor. If there is continuity, replace the rotor.

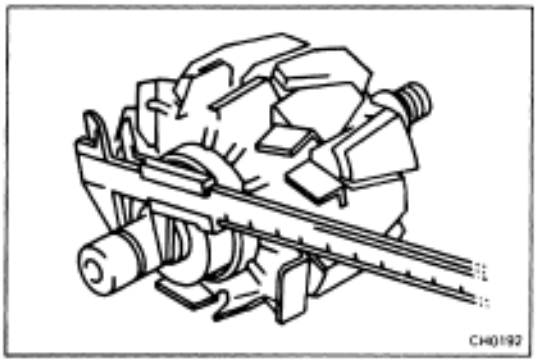

3. INSPECT SLIP RINGS

(a) Check that the slip rings are not rough or scored. If rough or scored, replace the rotor.

(b) Using calipers, measure the slip ring diameter.

If the diameter of the slip ring is less than the minimum, replace the rotor.

Standard diameter: 14.2 – 14.4 mm (0.559 – 0.567 in.)
Minimum diameter: 12.8 mm (0.504 in.)

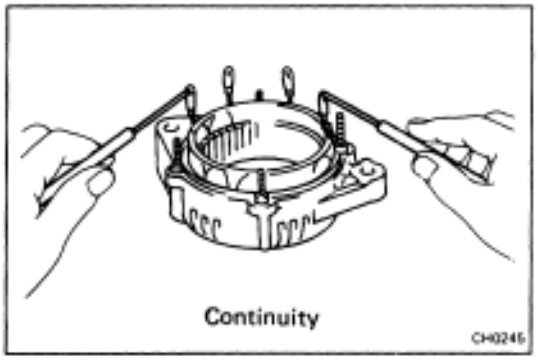

Stator

1. INSPECT STATOR FOR OPEN CIRCUIT

Using an ohmmeter, check all leads for continuity. If there is no continuity, replace the drive end frame assembly.

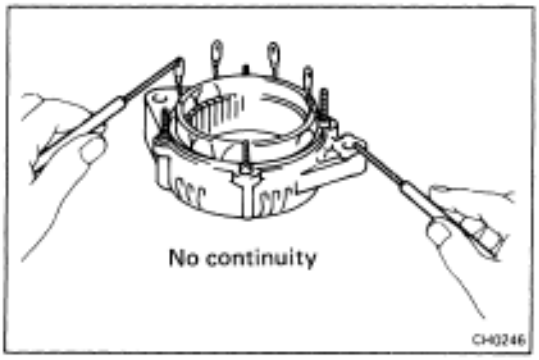

2. INSPECT THAT STATOR IS NOT GROUNDED

Using an ohmmeter, check that there is no continuity between the coil leads and drive end frame. If there is continuity, replace the drive end frame assembly.

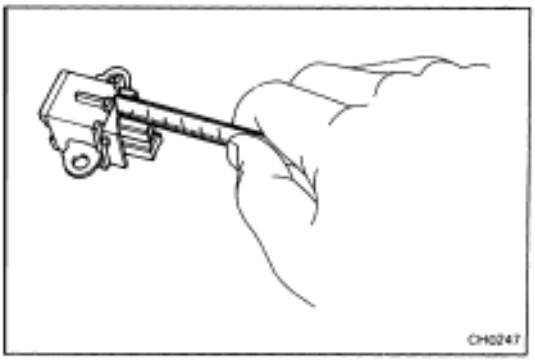

Brush and Brush Holder

1. MEASURE EXPOSED BRUSH LENGTH

Using a scale, measure the exposed brush length.

Standard exposed length: 10.5 mm (0.413 in.)
Minimum exposed length: 1.5 mm (0.059 in.)

If the exposed length is less than minimum, replace the brush (4A–FE) or brush holder (4A–GE).

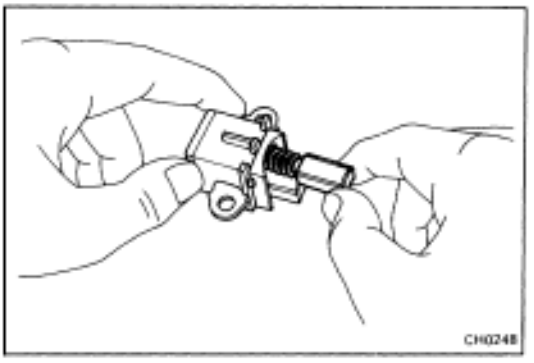

2. (4A– F E)

IF NECESSARY REPLACE BRUSHES

(a) Unsolder and remove the brush and the spring.

(b) Run the wire of the brush through the hole i n the brush holder, and insert the spring and brush into the brush holder.

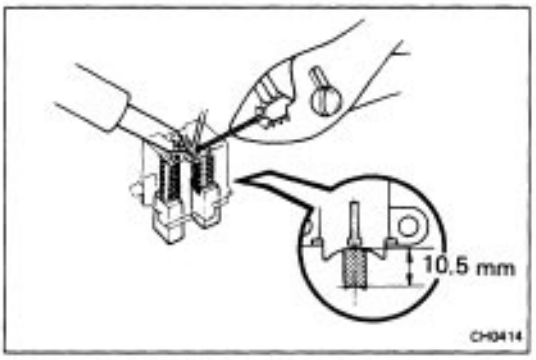

(c) Solder the brush wire to the brush holder at the exposed length.
Standard exposed length: 10.5 mm (0.413 in.)
(d) Check that the brush moves smoothly in the brush holder.
(e) Cut off the excess wire.
(f) Apply insulation paint to the soldered point.

Rectifier

1. INSPECT POSITIVE SIDE RECTIFIER

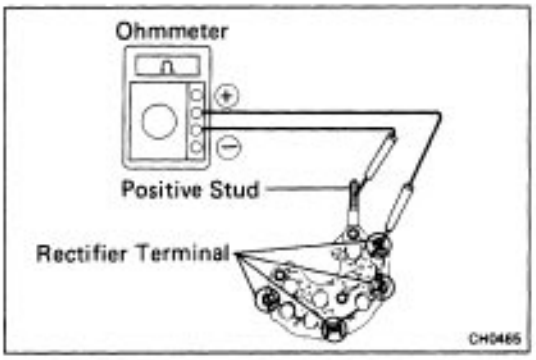

(a) Using an ohmmeter, connect one tester probe to the positive stud and the other to each rectifier terminal.

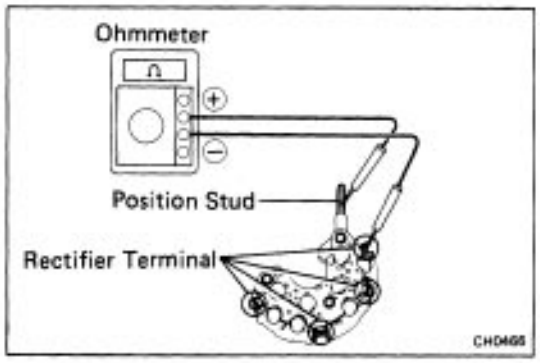

(b) Reverse the polarity of the tester probes and repeat step a.
(c) Check that one shows continuity and the other shows no continuity.
If not, replace the rectifier holder.

2. INSPECT NEGATIVE SIDE RECTIFIER

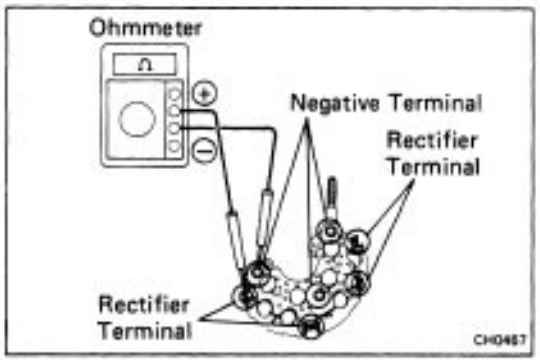

(a) Connect one tester probe to a rectifier terminal and the other to a rectifier negative terminal.

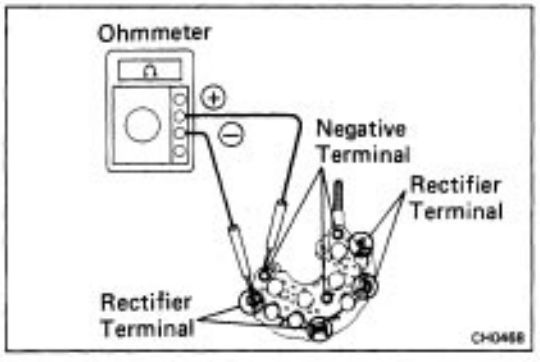

(b) Reverse the polarity of the tester probes.
(c) Check that one shows continuity and the other shows no continuity.
If not, replace the rectifier holder.

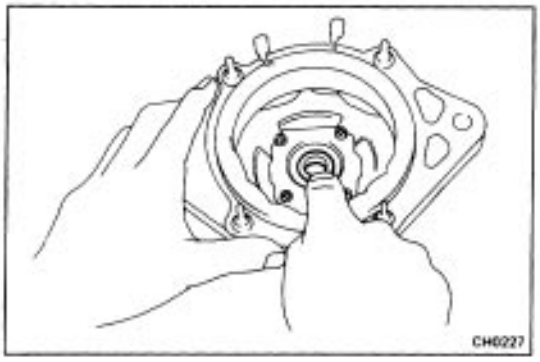

Bearings

1. INSPECT FRONT BEARING

Check that the bearing is not rough or worn.

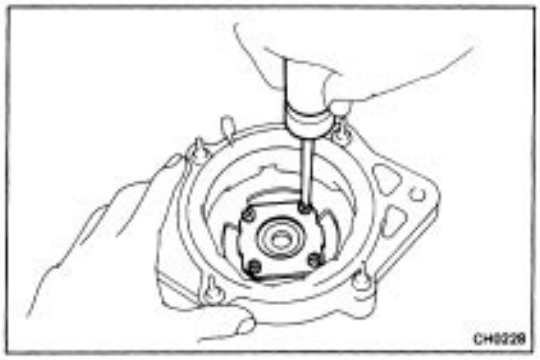

2. IF NECESSARY, REPLACE FRONT BEARING

(a) Remove the four screws and bearing retainer.

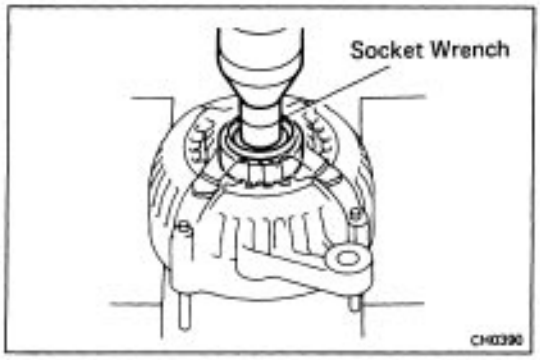

(b) Using a press and socket wrench, press out the front bearing.

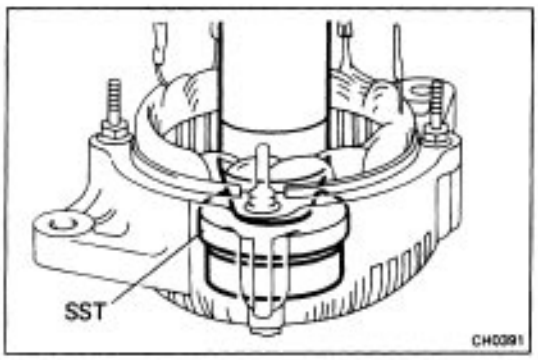

(c) Using SST and a press, press the front bearing into the drive end frame.
SST 09608–20012 (09608–00030)

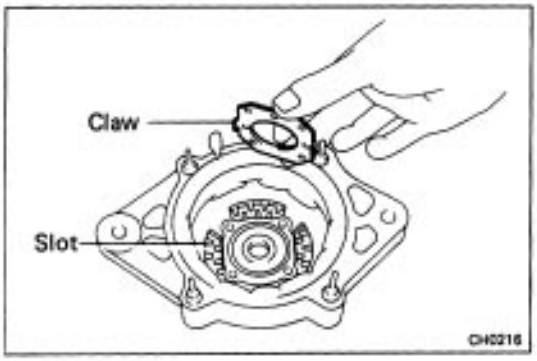

(d) Align the claws of the bearing retainer with the slots of the drive end frame.
(e) Install the bearing retainer with the four screws.

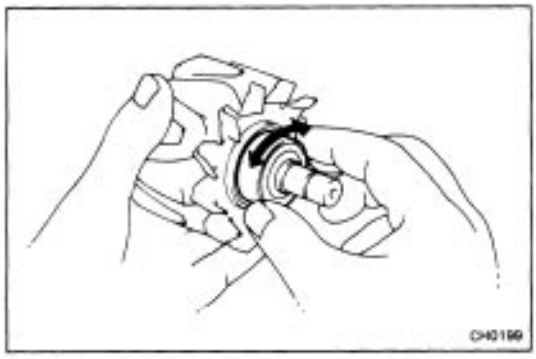

3. INSPECT REAR BEARING

Check that the bearing is not rough or worn.

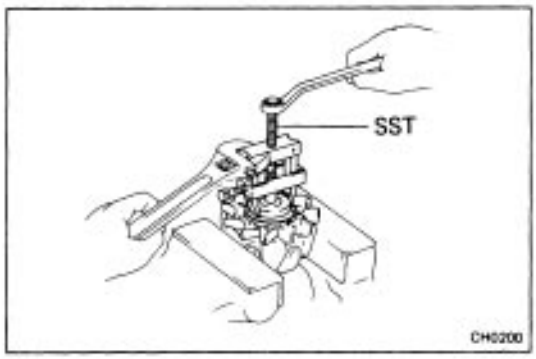

4. IF NECESSARY, REPLACE REAR BEARING

(a) Using SST, remove the rear bearing and cover.
SST 09820–00021

NOTICE: Be careful not to damage the fan.

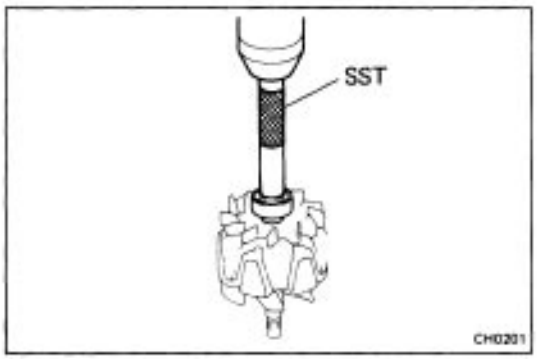

(b) Using SST and a press, press in a new bearing and the bearing cover.
SST 09285–76010

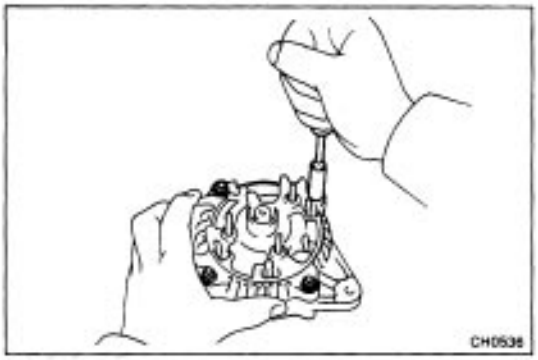

ASSEMBLY OF ALTERNATOR

(See page CH–6)

1. INSTALL ROTOR TO DRIVE END FRAME

2. (4A–GE)

PLACE SEAL PLATE ON RECTIFIER END FRAME

3. INSTALL REAR END FRAME

(a) Using a plastic hammer, lightly tap the rear end frame on the drive end frame.

(b) Install the four nuts.

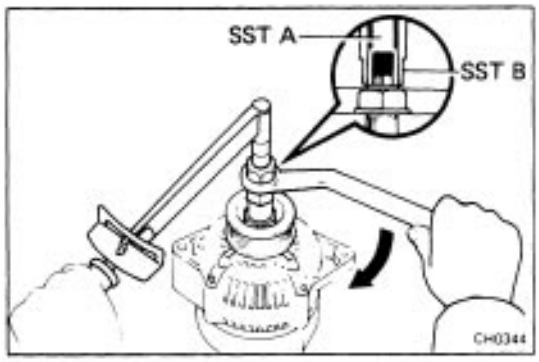

4. INSTALL PULLEY

(a) Install the pulley to the rotor shaft by tightening the pulley nut by hand.

(b) Hold SST A with a torque wrench and tighten SST B clockwise to the specified torque.

SST 09820–63010

Torque: 400 kg–cm (29 ft–lb, 39 N–m)

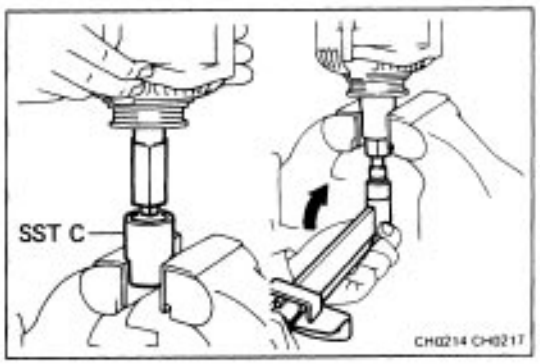

(c) Check that SST A is secured to the pulley shaft.
(d) As shown in the figure, mount SST C in a vise and then install the alternator to SST C.
(e) To torque the pulley nut, turn SST A in the direction shown in the figure.

Torque: 1,125 kg–cm (81 ft–lb, 110 N–m)

(f) Remove the alternator from SST C.
(g) Turn SST B and remove SST A and B.

5. (4A–GE)

PLACE SEAL PLATE ON RECTIFIER END FRAME

6. INSTALL RECTIFIER HOLDER

(a) Install the four rubber insulators on the lead wires.

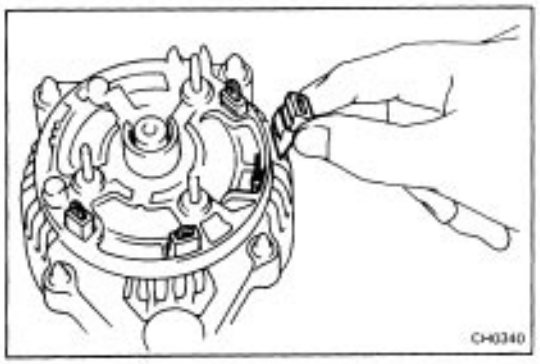

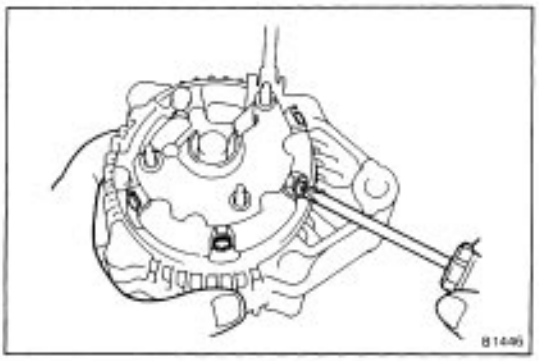

(b) Install the rectifier with four screws.

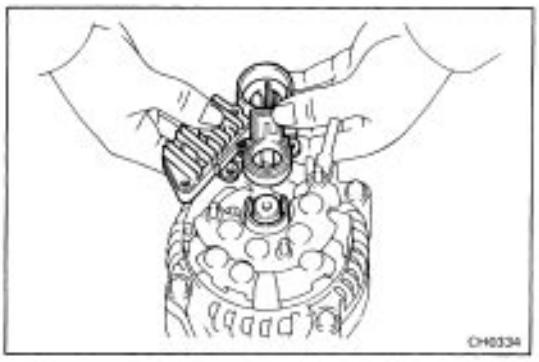

7. INSTALL BRUSH HOLDER AND IC REGULATOR (4A–FE)

(a) Place the brush holder cover to the brush holder.
(b) Install the I C regulator and brush holder to the rear end frame horizontally as shown in the figure.
HINT: Make sure the brush holder's cover doesn't slip to one side during installation.

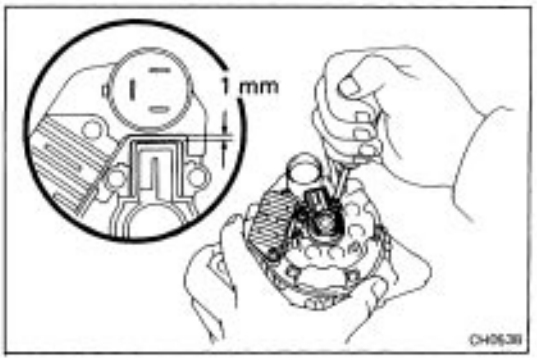

(c) Install and tighten the five screws.
HINT: Make sure the gap between the brush holder connector is at least 1 mm (0.04 in.).
(d) Fit the brush holder cover.

(4A–GE)

(a) Install the IC regulator and brush holder with the five screws.
(b) Place the brush holder cover on the brush holder.

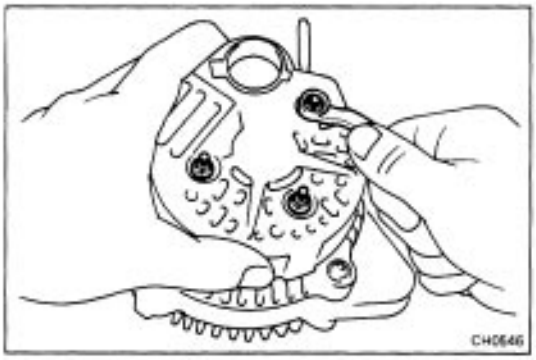

8. INSTALL REAR END COVER

(a) Install the end cover with the three nuts.

(b) Instal I the terminal insulator with the nut.

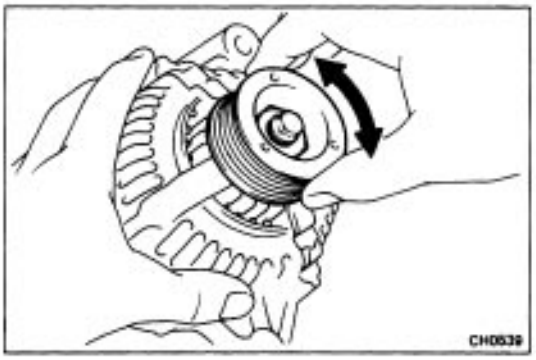

9. MAKE SURE ROTOR ROTATES SMOOTHLY

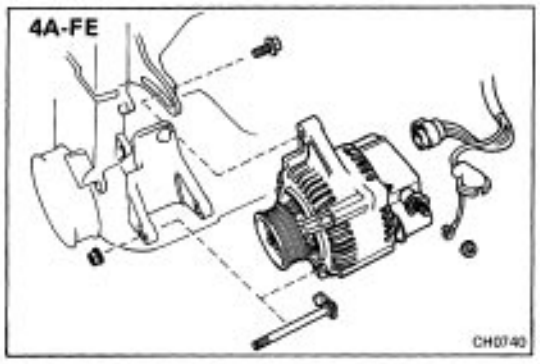

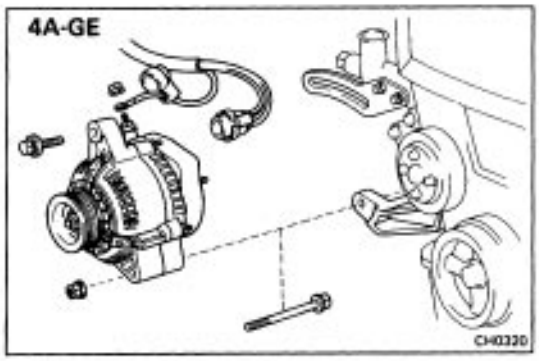

INSTALLATION OF ALTERNATOR

1. INSTALL ALTERNATOR

Mount the alternator on the engine bracket with the pivot and adjusting lock bolts.

Do not tighten the lock bolts.

2. INSTALL DRIVE BELTS

3. ADJUST DRIVE BELTS

4A–FE (See page EM–40)

4A–GE (See page EM–52)

Belt tension gauge:

Nippondenso BTG–20 (95506–00020) or
Borroughs No. BT–33–73F

Drive belt tension:

4A–FE

Alternator	**New belt 160 ± 20 lb**
	New belt 160 ± 20 l b
	Used belt 130 ± 20 lb
PS	**New belt 125 ± 25 lb**
	Used belt 80 ± 20 lb
A/C	**New belt 160 ± 20 lb**
	Used belt 100 ± 20 lb
4A–GE	**Alternator New belt 175 ± 5 lb**
Alternator	**Used belt 115 ± 20 lb**
PS and/or A/C	**New belt 175 ± 5 lb**
	Used belt 115 ± 20 lb

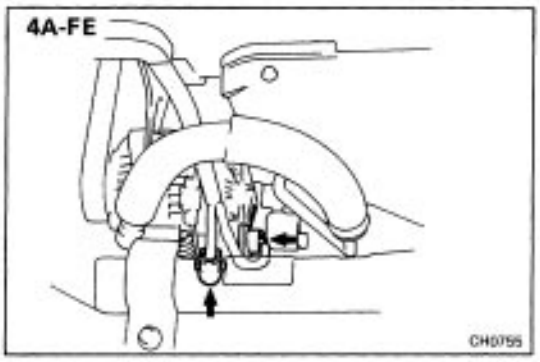

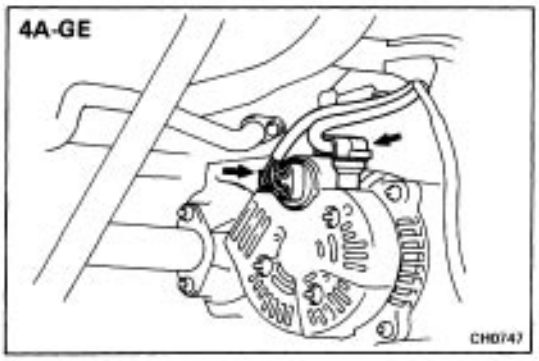

4. CONNECT WIRING TO ALTERNATOR

(a) Connect the wire to the alternator and install the nut.

(b) Connect the connector to the alternator.

5. CONNECT NEGATIVE CABLE TO BATTERY

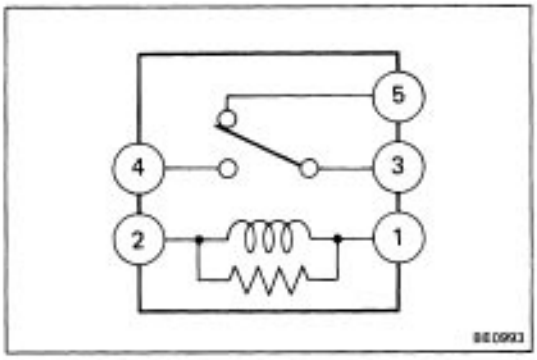

ENGINE MAIN RELAY

INSPECTION OF ENGINE MAIN RELAY

INSPECT ENGINE MAIN RELAY

HINT: Located in the engine compartment relay box.

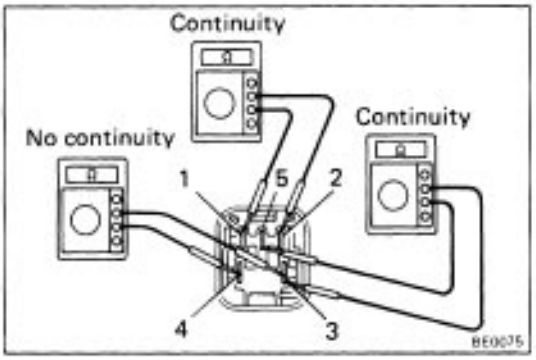

Inspect Relay Continuity

(a) Using an ohmmeter, check that there is continuity between terminals 1 and 2.
(b) Check that there is continuity between terminals 3 and 5.
(c) Check that there is no continuity between terminals 3 and 4.
If continuity is not as specified, replace the relay.

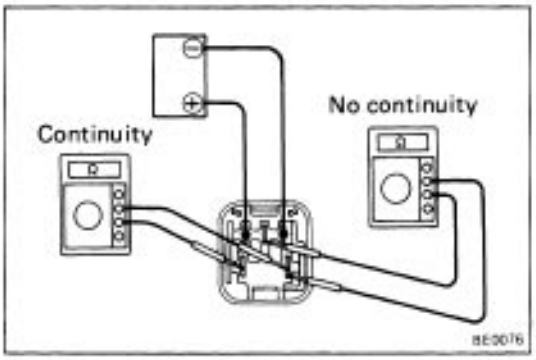

Inspect Relay Operation

(a) Apply battery voltage across terminals 1 and 2.
(b) Using an ohmmeter, check that there is continuity between terminals 3 and 4.
(c) Check that there is no continuity between terminals 3 and 5.
If operation is not as described, replace the relay.

CLUTCH

TROUBLESHOOTING

Problem	Possible cause	Remedy	Page
Hard to shift or will not shift	Clutch pedal freeplay excessive	Adjust pedal freeplay	CL–3
	Air in clutch lines	Bleed clutch system	CL–4
	Clutch release cylinder faulty	Repair release cylinder	CL–8
	Clutch master cylinder faulty	Repair master cylinder	CL–6
	Clutch disc out of true, runout is excessive or lining broken	Inspect clutch disc	CL–9
		Repair as necessary	CL–9
	Splines on input shaft or clutch disc dirty or burred	Replace clutch cover	CL–9
	Clutch pressure plate faulty		
Clutch slips	Clutch pedal freeplay insufficient	Adjust pedal freeplay	CL–3
	Clutch disc lining oily or worn out	Inspect clutch disc	CL–9
	Pressure plate faulty	Replace clutch cover	CL–9
	Release fork binding	Inspect release fork	
Clutch grabs/chatters	Clutch disc lining oily or worn out	Inspect clutch disc	CL–9
	Pressure plate faulty	Replace clutch cover	CL–9
	Clutch diaphragm spring bent	Align clutch diaphragm spring	CL–9
	Engine mounts loose	Repair as necessary	
Clutch pedal spongy	Air in clutch lines	Bleed clutch system	CL–4
	Clutch release cylinder faulty	Repair release cylinder	CL–8
	Clutch master cylinder faulty	Repair master cylinder	CL–6
Clutch noisy	Loose part inside housing	Repair as necessary	
	Release bearing worn or dirty	Replace release bearing	CL–9

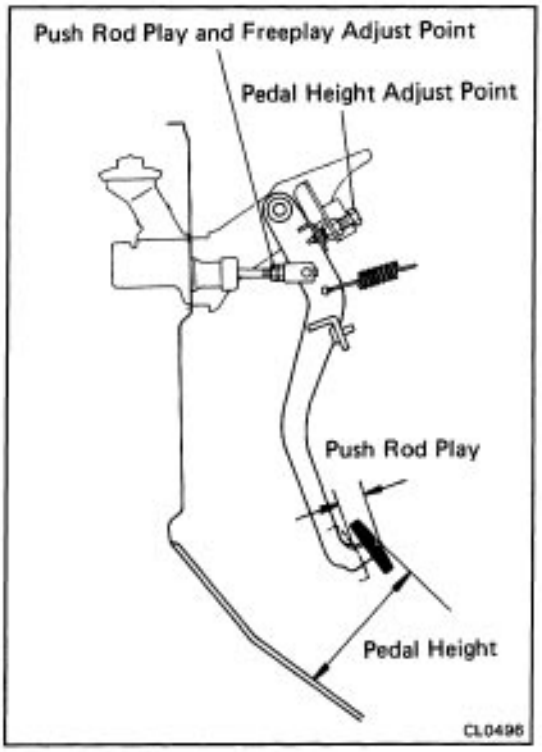

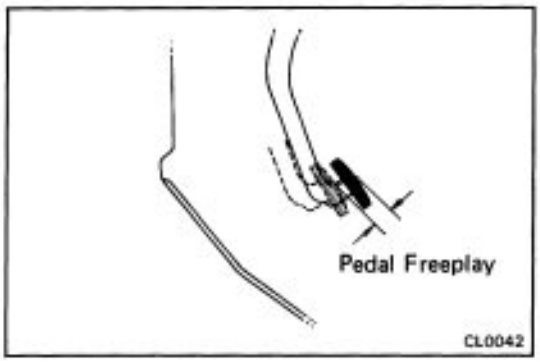

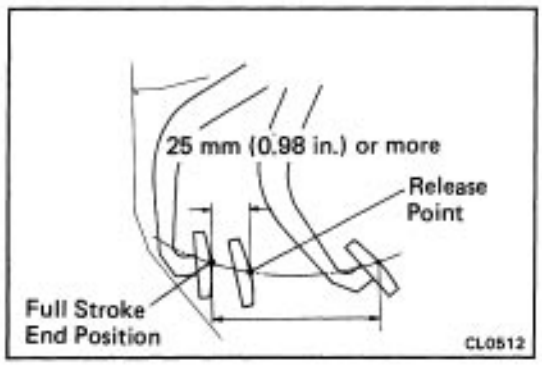

CHECK AND ADJUSTMENT OF CLUTCH PEDAL

1. CHECK THAT PEDAL HEIGHT IS CORRECT

Pedal height from asphalt sheet:

145–155 mm (5.71–6.10 in.)

2. IF NECESSARY, ADJUST PEDAL HEIGHT

Loosen the lock nut and turn the stopper bolt until the height is correct. Tighten the lock nut.

3. CHECK THAT PEDAL FREEPLAY AND PUSH ROD PLAY ARE CORRECT

(Pedal Freeplay)

Push in on the pedal until the beginning of clutch resistance is felt.

Pedal freeplay: 5.0–15.0 mm

(0.197–0.597 in.)

(Push rod play)

Push in on the pedal with a finger softly until the resistance begins to increase a little.

Push rod play at pedal top: 1.0–5.0 mm

(0.039–0.197 in.)

4. IF NECESSARY, ADJUST PEDAL FREEPLAY AND PUSH ROD PLAY

(a) Loosen the lock nut and turn the push rod until the freeplay and push rod play are correct.

(b) Tighten the lock nut.

(c) After adjusting the pedal freeplay, check the pedal height.

(d) Connect the air duct and install the lower finish panel.

5. INSPECT CLUTCH RELEASE POINT

(a) Pull the parking brake lever and install wheel stopper.

(b) Start the engine and idle the engine.

(c) Without depressing the clutch pedal, slowly shift the shift lever into reverse position until the gears contact.

(d) Gradually depress the clutch pedal and measure the stroke distance from the point the gear noise stops (release point) up to the full stroke end position.

Standard distance: 25 mm (0.98 in.) or more

(From pedal stroke end position to release point)

If the distance is not as specified, perform the following operation.

- Inspect pedal height.
- Inspect push rod play and pedal freeplay.
- Bleed the clutch line.
- Inspect the clutch cover and disc.

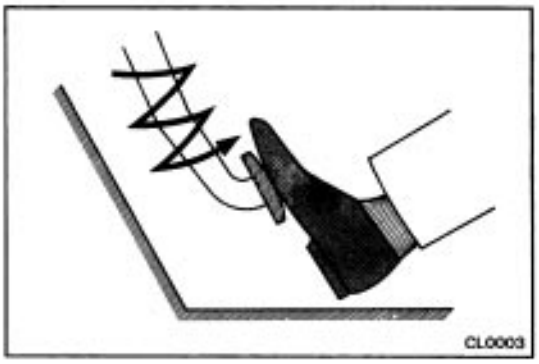



BLEEDING OF CLUTCH SYSTEM

HINT: If any work is done on the clutch system or if air is suspected in the clutch lines, bleed the system of air.

NOTICE: Do not let brake fluid remain on a painted surface. Wash it off immediately.

1. FILL CLUTCH RESERVOIR WITH BRAKE FLUID

Check the reservoir frequently. Add fluid if necessary.

2. CONNECT VINYL TUBE TO BLEEDER PLUG

Insert the other end of the tube in a half–full container of brake fluid.

3. BLEED CLUTCH LINE

(a) Slowly pump the clutch pedal several times.

(b) While pressing on the pedal, loosen the bleeder plug until the fluid starts to run out. Then close the bleeder plug.

(e) Repeat this procedure until there are no more air bubbles in the fluid.

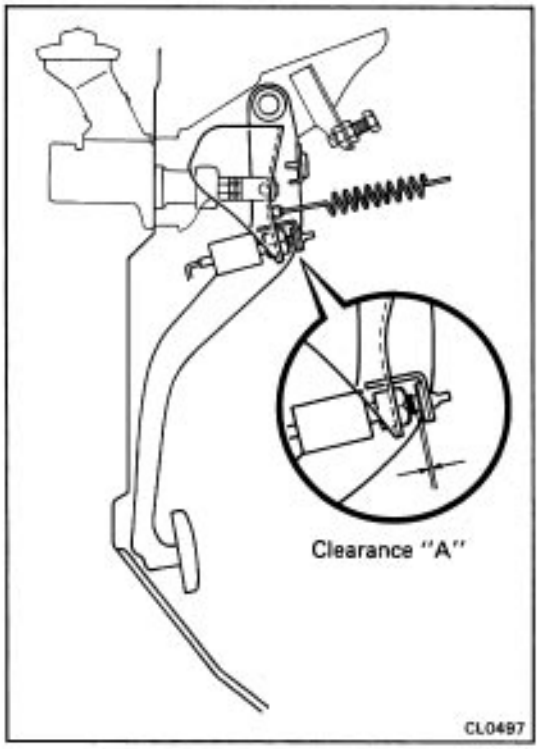

INSPECTION OF CLUTCH START SYSTEM

CHECK CLUTCH PEDAL

1. CHECK THAT PEDAL HEIGHT IS CORRECT

(See page CL–3)

2. CHECK THAT PEDAL FREEPLAY AND PUSH ROD PLAY ARE CORRECT

(See page CL–3)

CHECK CLUTCH START SYSTEM

CHECK CLUTCH START SYSTEM

(a) Check that the engine does not start when the clutch pedal is released.

(b) Check that the engine starts when the clutch pedal is fully depressed.

(c) Check that clearance ”A” is greater than 1 mm (0.04 in.) when the clutch is fully depressed.

If necessary, adjust or replace the clutch start switch.

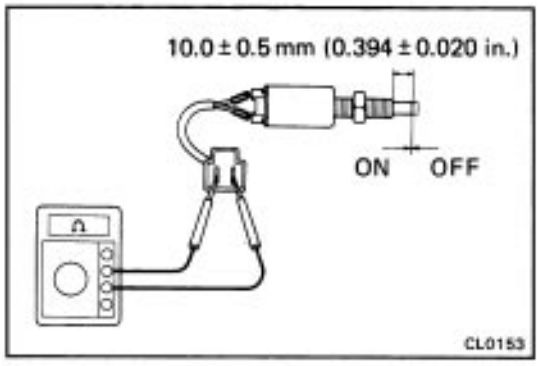

INSPECTION AND ADJUSTMENT OF CLUTCH START SWITCH

1. INSPECT CONTINUITY OF CLUTCH START SWITCH

(a) Check that there is continuity between terminals when the switch is ON (pushed).

(b) Check that there is no continuity between terminals when the switch is OFF (free).

If continuity is not as specified, replace the switch.

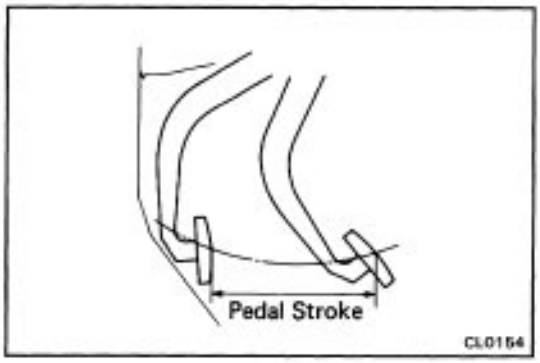

2. ADJUST CLUTCH START SWITCH

(a) Measure the pedal stroke, and check the switch clearance ”A” using the chart left.

(b) Loosen and adjust the switch position.

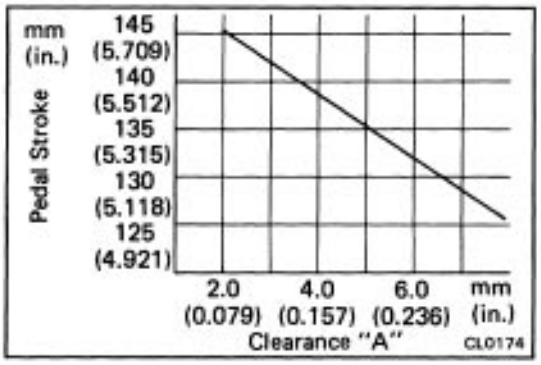

(c) Recheck that the engine does not start when the clutch pedal is released.

CLUTCH MASTER CYLINDER

COMPONENTS

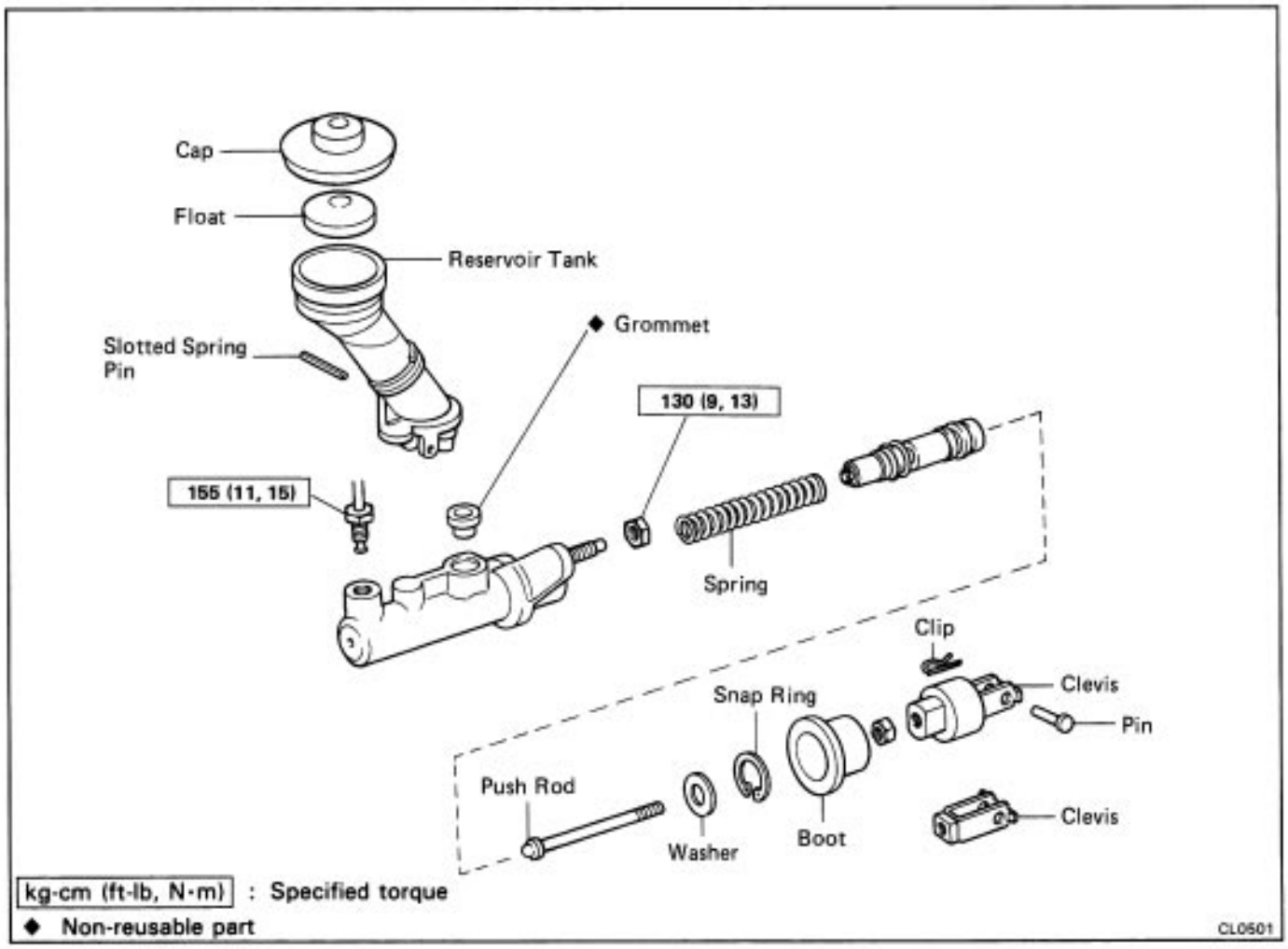

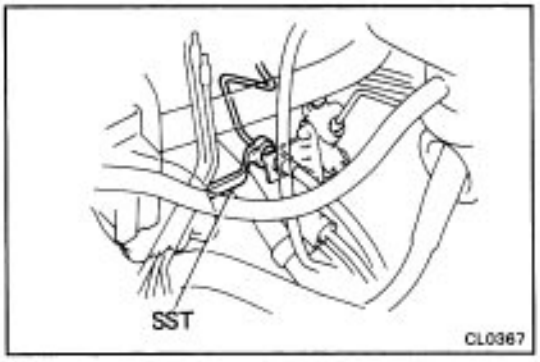

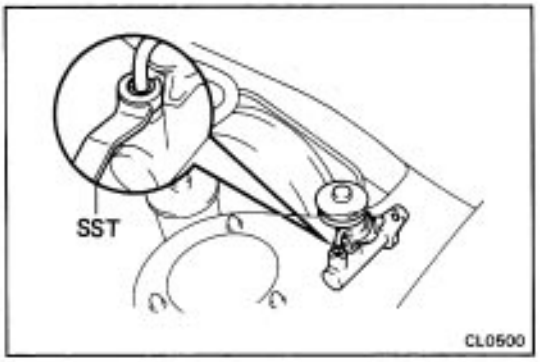

REMOVAL AND INSTALLATION OF CLUTCH MASTER CYLINDER

(MAIN POINT OF REMOVAL AND INSTALLATION)

1. (For 4A–GE engine)

REMOVE BRAKE BOOSTER

2. REMOVE MASTER CYLINDER

(a) Using SST, disconnect the clutch tube from the clutch hose.
SST 09751–36011

(b) Remove the clip, clevis pin and return spring.

(c) Remove the two nuts.

(d) Pull out the master cylinder.

HINT: Be careful not to damage the clutch tube.

(e) Using SST, disconnect the clutch tube.
SST 09751–36011

DISASSEMBLY OF MASTER CYLINDER

1. REMOVE RESERVOIR TANK

(a) Using a pin punch and a hammer, drive out the slotted spring pin.

(b) Remove reservoir tank and grommet.

2. REMOVE PUSH ROD AND PISTON

INSPECTION OF MASTER CYLINDER

HINT: Clean the disassembled parts with compressed air.

1. INSPECT MASTER CYLINDER BORE FOR SCORING OR CORROSION

If a problem is found, clean or replace the cylinder.

2. INSPECT PISTON AND CUPS FOR WEAR, SCORING, CRACKS OR SWELLING

If either one requires replacement, use the parts from the cylinder kit.

3. INSPECT PUSH ROD FOR WEAR OR DAMAGE

If necessary, replace the push rod.

ASSEMBLY OF MASTER CYLINDER

1. COAT PARTS WITH LITHIUM SOAP BASE GLYCOL GREASE AS SHOWN

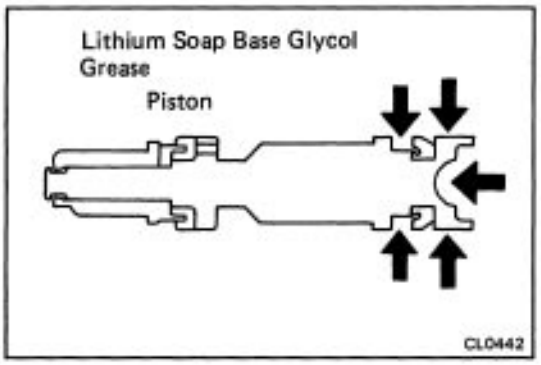

2. INSERT PISTON INTO CYLINDER

3. INSTALL PUSH ROD ASSEMBLY WITH SNAP RING

4. INSTALL RESERVOIR TANK

(a) Install reservoir tank and new grommet.

(b) Using a pin punch and a hammer, drive in the slotted spring pin.

INSTALLATION OF MASTER CYLINDER

(See page CL–5)

1. INSTALL MASTER CYLINDER

Install the mounting nut, and torque them.

Torque: 130 kg–cm (9 ft–lb, 13 N–m)

2. CONNECT CLUTCH LINE UNION

Using SST, connect the union.

SST 09751–36011

3. CONNECT PUSH ROD AND INSTALL PIN

Install the clip in the push rod pin.

4**. (For 4A–GE engine)**

INSTALL BRAKE BOOSTER

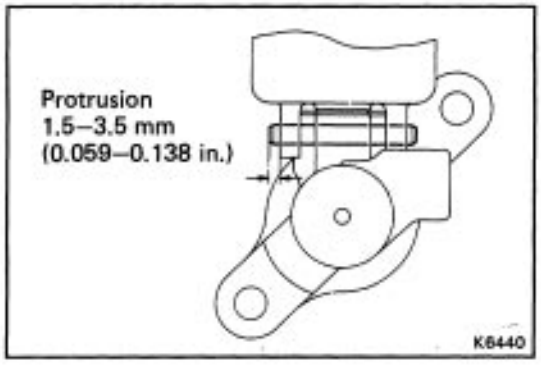

5. BLEED SYSTEM AND ADJUST CLUTCH PEDAL

(See page CL–3)

CLUTCH RELEASE CYLINDER

COMPONENTS

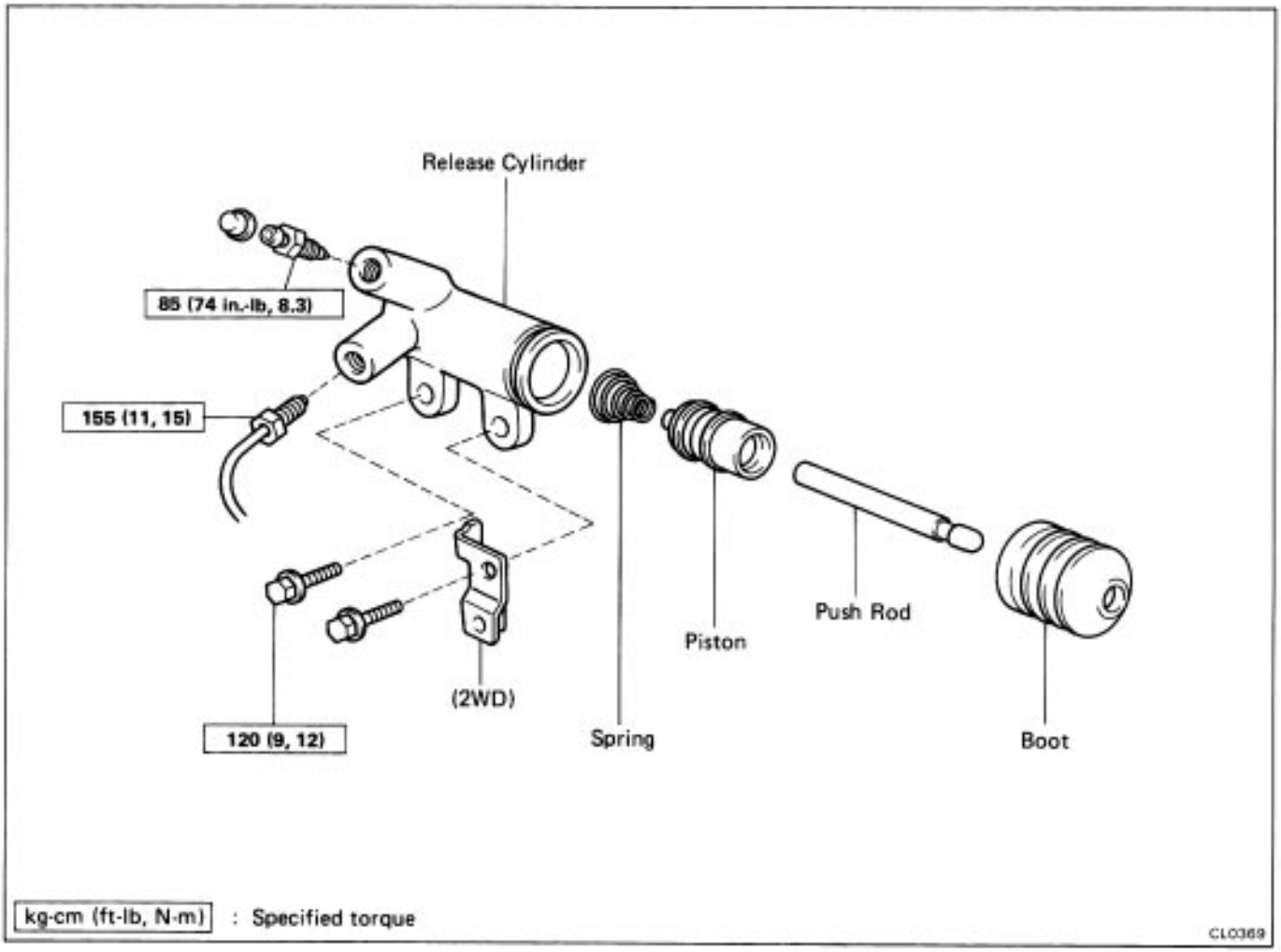

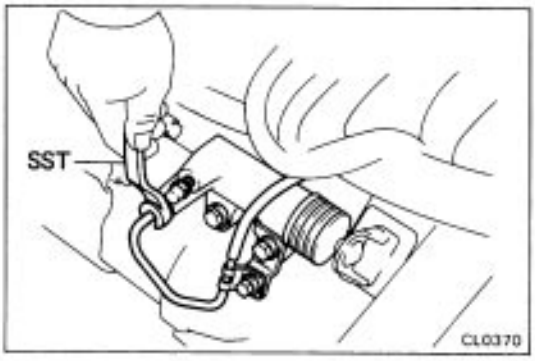

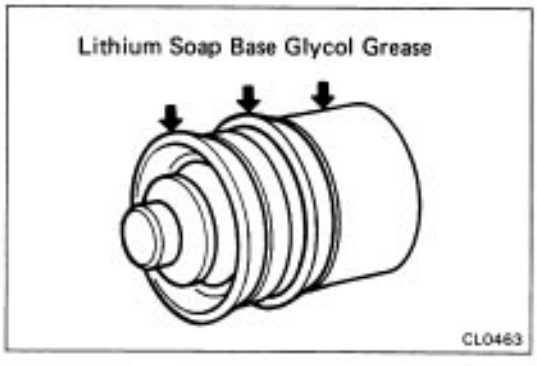

REMOVAL AND INSTALLATION OF CLUTCH RELEASE CYLINDER

(MAIN POINT OF REMOVAL AND INSTALLATION)

1. DISCONNECT AND CONNECT CLUTCH LINE TUBE

Using SST, disconnect and connect the tube.
SST 09751–36011

2. INSPECT RELEASE CYLINDER BORE FOR SCORING OR CORROSION

If a problem is found, clean or replace the cylinder.

3. INSPECT PISTON AND CUPS FOR WEAR, SCORING, CRACKS OR SWELLING

If either one requires replacement, use the parts from the cylinder kit.

4. INSPECT PUSH ROD FOR WEAR OR DAMAGE

If necessary, replace the push rod.

5. COAT PISTON WITH LITHIUM SOAP BASE GLYCOL GREASE AS SHOWN

6. BLEED CLUTCH SYSTEM

CLUTCH UNIT

REMOVAL OF CLUTCH UNIT

Remove the parts as shown.

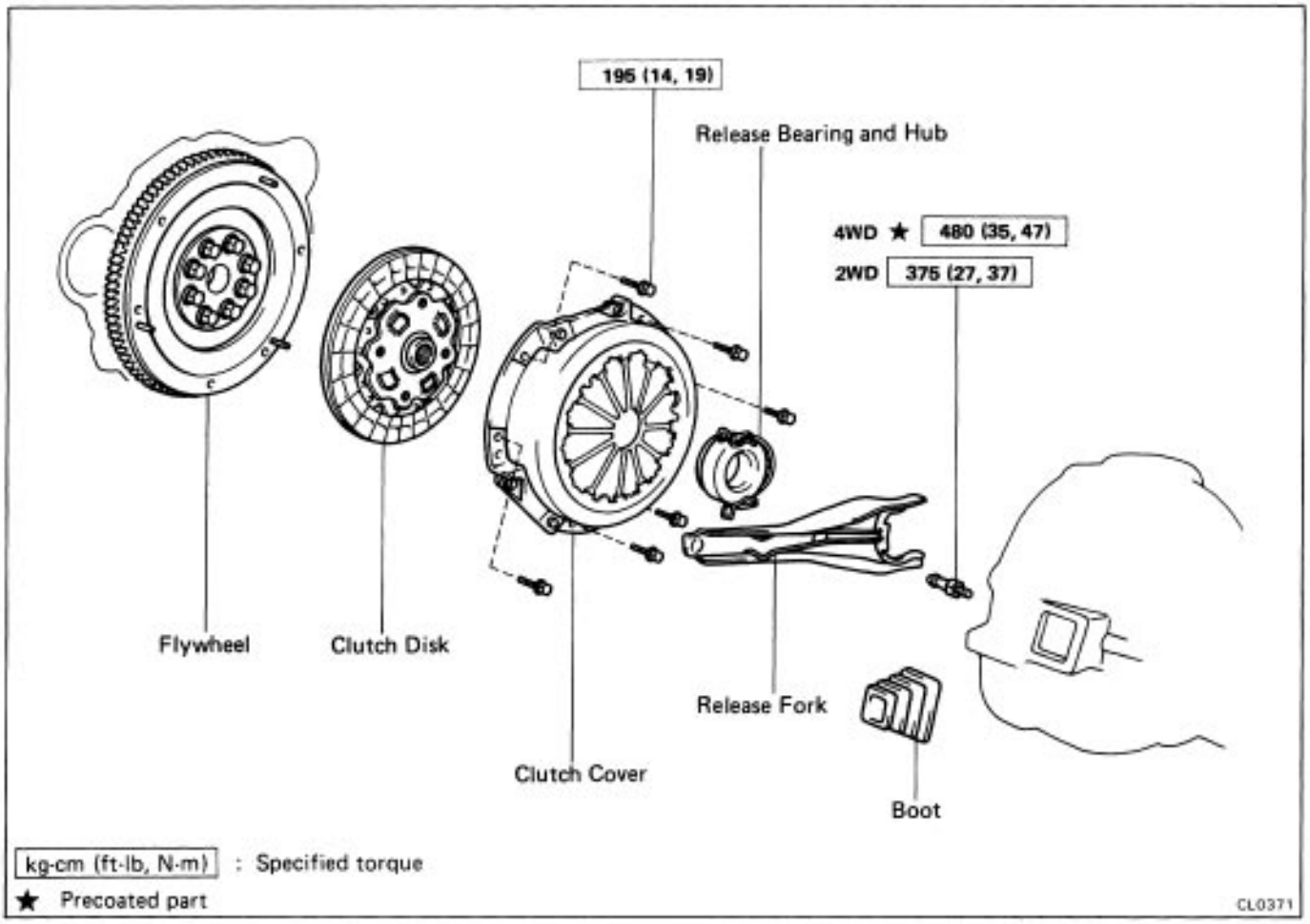

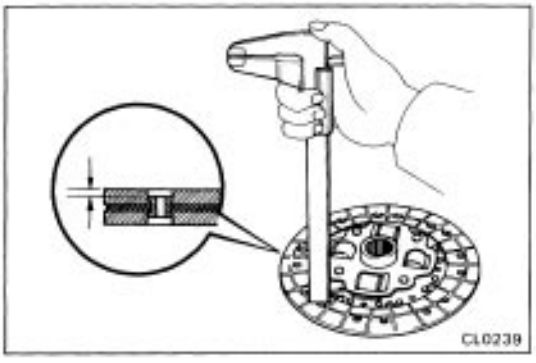

INSPECTION OF CLUTCH PARTS

1. INSPECT CLUTCH DISC FOR WEAR OR DAMAGE

Using calipers, measure the rivet head depth.

Minimum rivet depth: 0.3 mm (0.012 in.)

If a problem is found, replace the clutch disc.

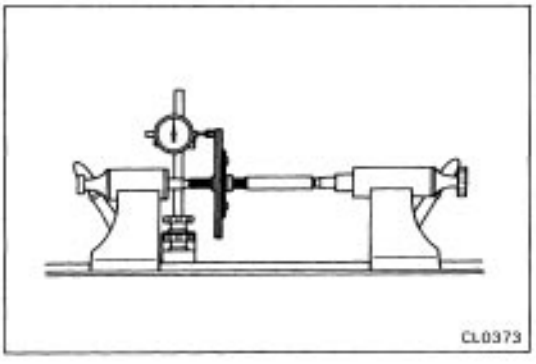

2. INSPECT CLUTCH DISC RUNOUT

Using a dial indicator, check the disc runout.

Maximum runout: 0.8 mm (0.031 in.)

If runout is excessive, replace the clutch disc.

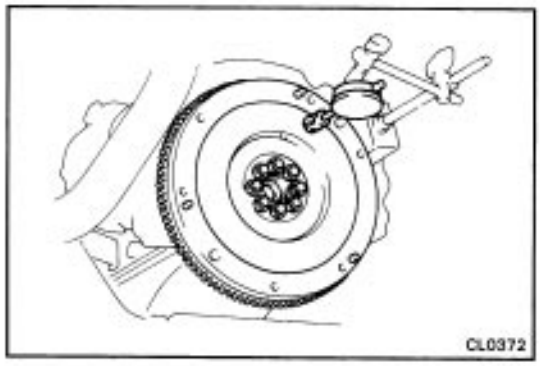

3. INSPECT FLYWHEEL RUNOUT

Using a dial indicator, check the flywheel runout.

Maximum runout: 0.1 mm (o.004 in.)

If runout is excessive, replace the flywheel.

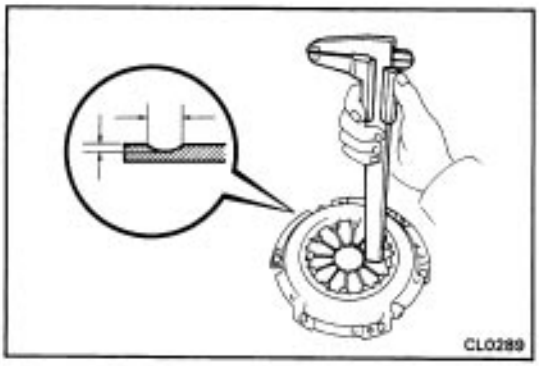

4. INSPECT DIAPHRAGM SPRING FOR WEAR

Using calipers, measure the diaphragm spring for depth and width of wear.

Maximum: Depth 0.6 mm (0.024 in.)

Width 5.0 mm (0.197 in.)

If necessary, replace the clutch cover.

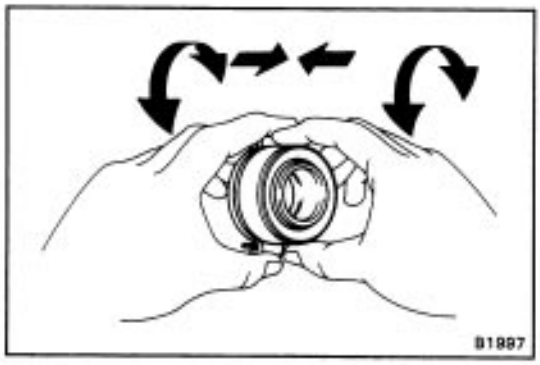

5. INSPECT RELEASE BEARING

Turn the bearing by hand while applying force in the axial direction.

HINT: The bearing is permanently lubricated and requires no cleaning or lubrication.

If a problem is found, replace the bearing.

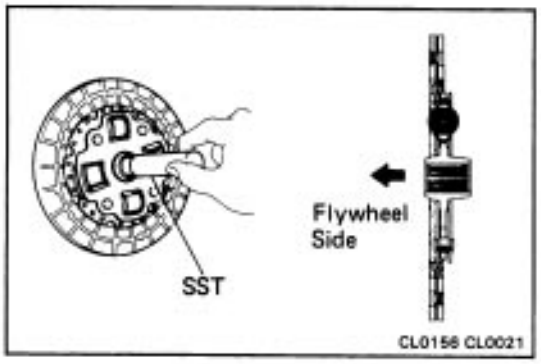

INSTALLATION OF CLUTCH UNIT

(MAIN POINT OF INSTALLATION)

1. INSTALL CLUTCH DISC AND COVER ON FLYWHEEL

Insert the SST in the clutch disc, and then set them and the cover in position.

2WD SST 09301–32010

4WD SST 09301–17010

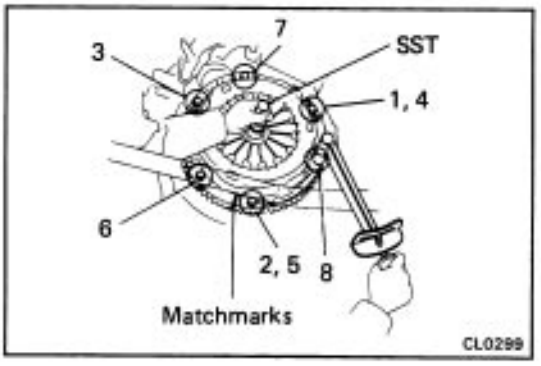

2. INSTALL CLUTCH COVER

(a) Align the matchmarks on the clutch cover and flywheel.

(b) Torque the bolts on the clutch cover in the order shown.

Torque: 195 kg–cm (14 ft–lb, 19 N–m)

HINT: Temporarily tighten the No.1 and No.2 bolts.

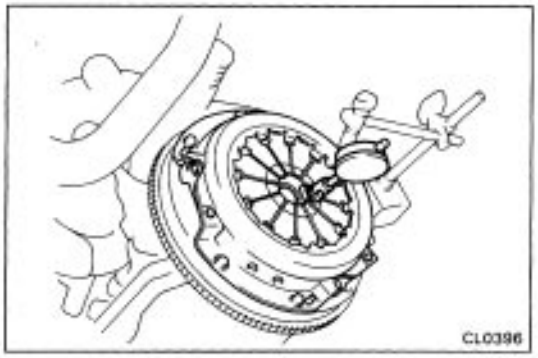

3. CHECK DIAPHRAGM SPRING TIP ALIGNMENT

Using a dial indicator with roller instrument, check the diaphragm spring tip alignment.

Maximum non–alignment: 0.5 mm (0.020 in.)

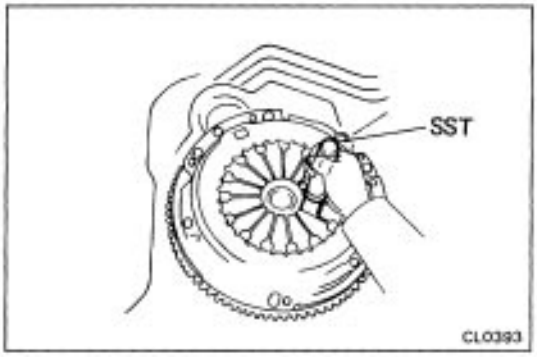

If alignment is not as specified, using SST, adjust the diaphragm spring tip alignment.

SST 09333–00013

4. APPLY MOLYBDENUM DISULPHIDE LITHIUM BASE GREASE (NLGI NO.2) AS SHOWN

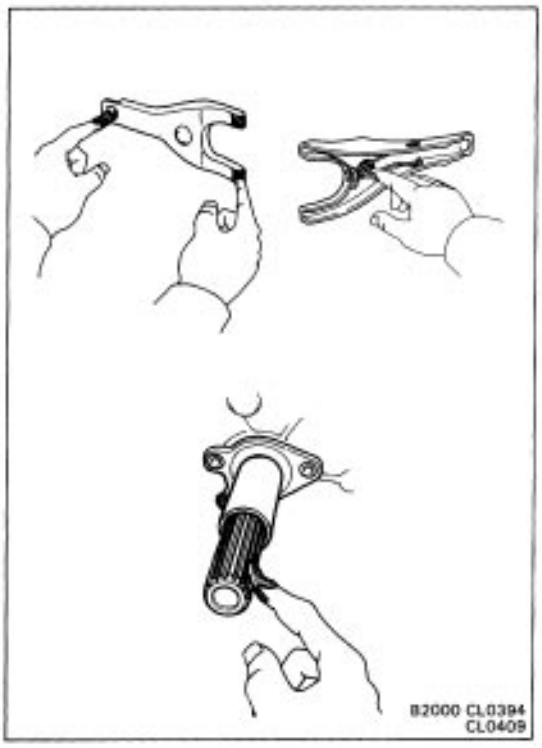

COOLING SYSTEM

DESCRIPTION

This engine utilizes a pressurized water forced circulation cooling system which includes a thermostat equipped with a by–pass valve mounted on the inlet side.

4A-FE

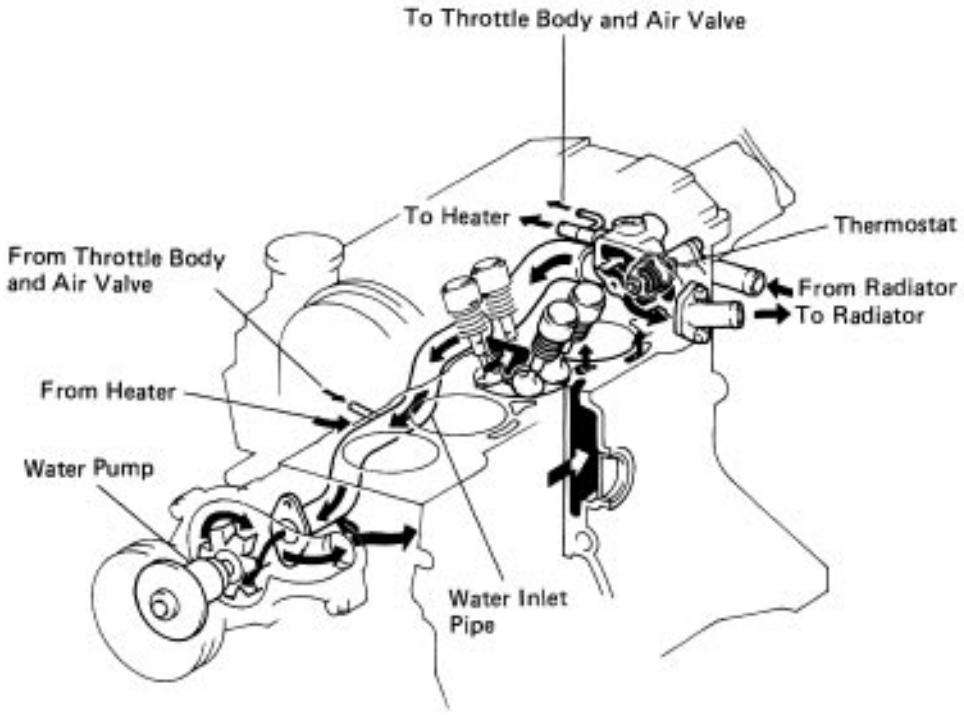

4A-GE

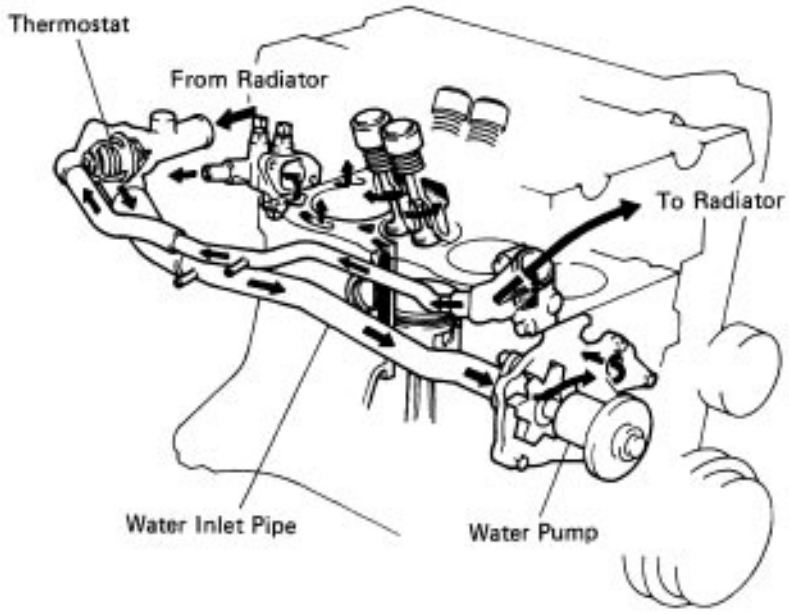

C00846
C00546

The cooling system is composed of the water jacket (inside the cylinder block and cylinder head), radiator, water pump, thermostat, electric fan, hoses and other components.
Coolant which is heated in the water jacket is pumped to the radiator, through which an electric fan blows air to cool the coolant as it passes through. Coolant which has been cooled is then sent back to the engine by the water pump, where it cools the engine.
The water jacket is a network of channels in the shell of the cylinder block and cylinder head through which coolant passes. It is designed to provide adequate cooling of the cylinders in the combustion chambers which become the hottest during engine operation.

RADIATOR

The radiator performs the function of cooling the coolant which has passed through the water jacket and become hot, and is mounted in the front of the vehicle. The radiator consists of an upper and lower tank, and a core which connects the two tanks. The upper tank contains the inlet for coolant from the water jacket and the filter inlet. It also has a hose attached through which excess coolant or steam can flow. The lower tank contains the outlet for coolant and the drain cock. The core contains many tubes through which coolant flows from the upper tank to the lower tank as well as cooling fins which radiate heat away from the coolant in the tubes. The air sucked through the radiator by the electric fan, as well as the wind generated by the vehicle's travel, passes through the radiator, cooling it. Models with automatic transmissions include an automatic transmission fluid cooler built into the lower tank of the radiator.
A fan with an electric motor is mounted behind the radiator to assist the flow of air through the radiator. The fan operates when the coolant temperature becomes high in order to prevent it from becoming too high.

RADIATOR CAP

The radiator cap is a pressure type cap which seals the radiator, resulting in pressurization of the radiator as the coolant expands. The pressurization prevents the coolant from boiling even when the coolant temperature exceeds 100˚C (212˚F). A
relief valve (pressurization valve) and a vacuum valve (negative pressure valve) are built into the radiator cap. The relief valve opens and lets steam escape through the overflow pipe when the pressure in the cooling system exceeds the specified limit. The vacuum valve opens and lets coolant in the reservoir tank return to the radiator when the coolant temperature drops. The valve's opening allows the pressure in the cooling system to return to the coolant in the reservoir tank.

RESERVOIR TANK

The reservoir tank is used to catch coolant which overflows the cooling system as a result of volumetric expansion when the coolant is heated. The coolant in the reservoir tank returns to the radiator when the coolant temperature drops, thus keeping the radiator full at all times and avoiding needless coolant loss. Check the reservoir tank level to see if the coolant needs to be replenished.

WATER PUMP

The water pump is used for forced circulation of coolant through the cooling system. It is mounted on the front of the cylinder block and driven by a
V–ribbed belt.

THERMOSTAT

The thermostat is a wax type bypass valve and is mounted in the water inlet housing. The thermostat includes a type of automatic valve operated by fluctuations in the coolant temperature. This valve closes when the coolant temperature drops, preventing the circulation of coolant through the engine and thus permitting the engine to warm up rapidly. The valve opens when the coolant temperature has risen, allowing the circulation of coolant.
Wax inside the thermostat expands when heated and contracts when cooled. Heating the wax thus generates pressure which overpowers the force of the spring which keeps the valve closed, thus opening the valve. When the wax cools, its contraction causes the force of the spring to take effect once more, closing the valve. The thermostat in this engine operates at a temperature of 82˚C (1 801F).

TROUBLESHOOTING

Problem	Possible cause	Remedy	Page
Engine overheats	Check coolant	Replenish coolant	
	Water pump drive belt loose or missing	Adjust or replace belt	
	Dirt, leaves or insects on radiator	Clean radiator	
	Hoses, water pump, thermostat housing, radiator, heater, core plugs or head gasket leakage	Repair as necessary	
	Thermostat faulty	Check thermostat	CO–11
	Ignition timing retarded	Set timing	
	Electric cooling system faulty	Inspect electric cooling system	CO–21
	Radiator hose plugged or rotted	Replace hose	
	Water pump faulty	Replace water pump	CO–6
	Radiator plugged or cap faulty	Check radiator	CO–13
	Cylinder head or block cracked or plugged	Repair as necessary	

HINT: The thermostat is equipped with a by–pass valve, if the engine tends to overheat, removal of the thermostat would have an adverse effect, causing a lowering of cooling efficiency.

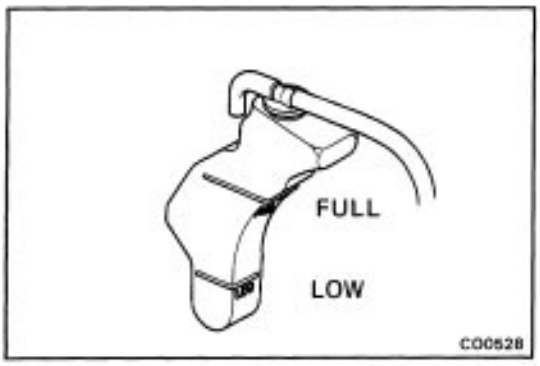

CHECK AND REPLACEMENT OF ENGINE COOLANT

1. CHECK ENGINE COOLANT LEVEL AT RESERVE TANK

The coolant level should be between the ”LOW” and ”FULL” lines.

If low, check for leaks and add coolant up to the FULL line.

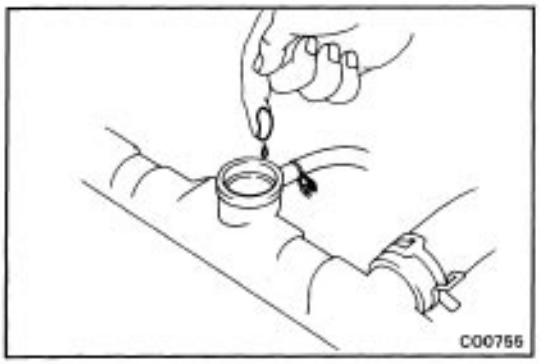

2. CHECK ENGINE COOLANT QUALITY

There should not be any excessive rust deposits or scales around the radiator cap or radiator filler hole, and the coolant should be free from oil.

If excessively dirty, replace the coolant.

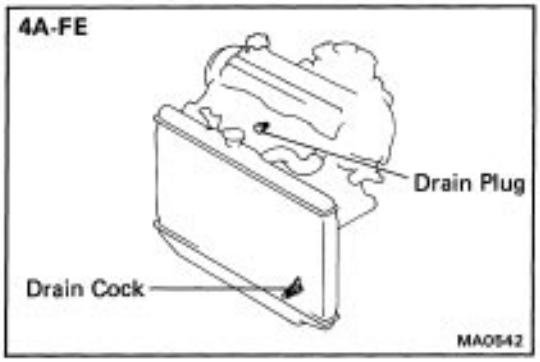

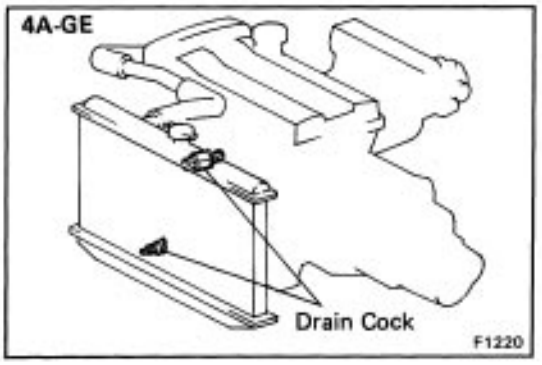

3. REPLACE ENGINE COOLANT

(a) Remove the radiator cap.

(b) Drain the coolant from the radiator cock and engine drain plug or cock.

(c) Apply sealant to the threads of the engine drain plug.

Sealant: Part No.08833–00080, THREE BOND 1324, Loctite 242 or equivalent

(d) Close the drain plug and cocks.

Torque (Engine drain plug):

350 kg–cm (25 ft–lb, 34 N–m)

(e) Fill the system with coolant.

Use a good brand of ethylene–glycol base coolant, mixed according to the manufacturer’s directions.

Using coolant which includes more than 50% ethylene–glycol (but not more than 70%) is recommended.

NOTICE:

- **Do not use alcohol type coolant.**
- **The coolant should be mixed with demineralized water or distilled water.**

Capacity (wl heater):

4A–FE

M/T (Ex. AE92L–ACMXKK)

5.6 liters (5.9 US qts, 4.9 Imp. qts)

M/T (AE92L–ACMXKK)

6.2 liters (6.5 US qts, 5.5 Imp. qts)

A/T 6.1 liters (6.4 US qts, 5.4 Imp. qts)

4A–GE 6.0 liters (6.3 US qts, 5.3 Imp. qts)

(f) Install the radiator cap.

(g) Start the engine and check for leaks.

(h) Recheck the coolant level and refill as necessary.

WATER PUMP

COMPONENTS

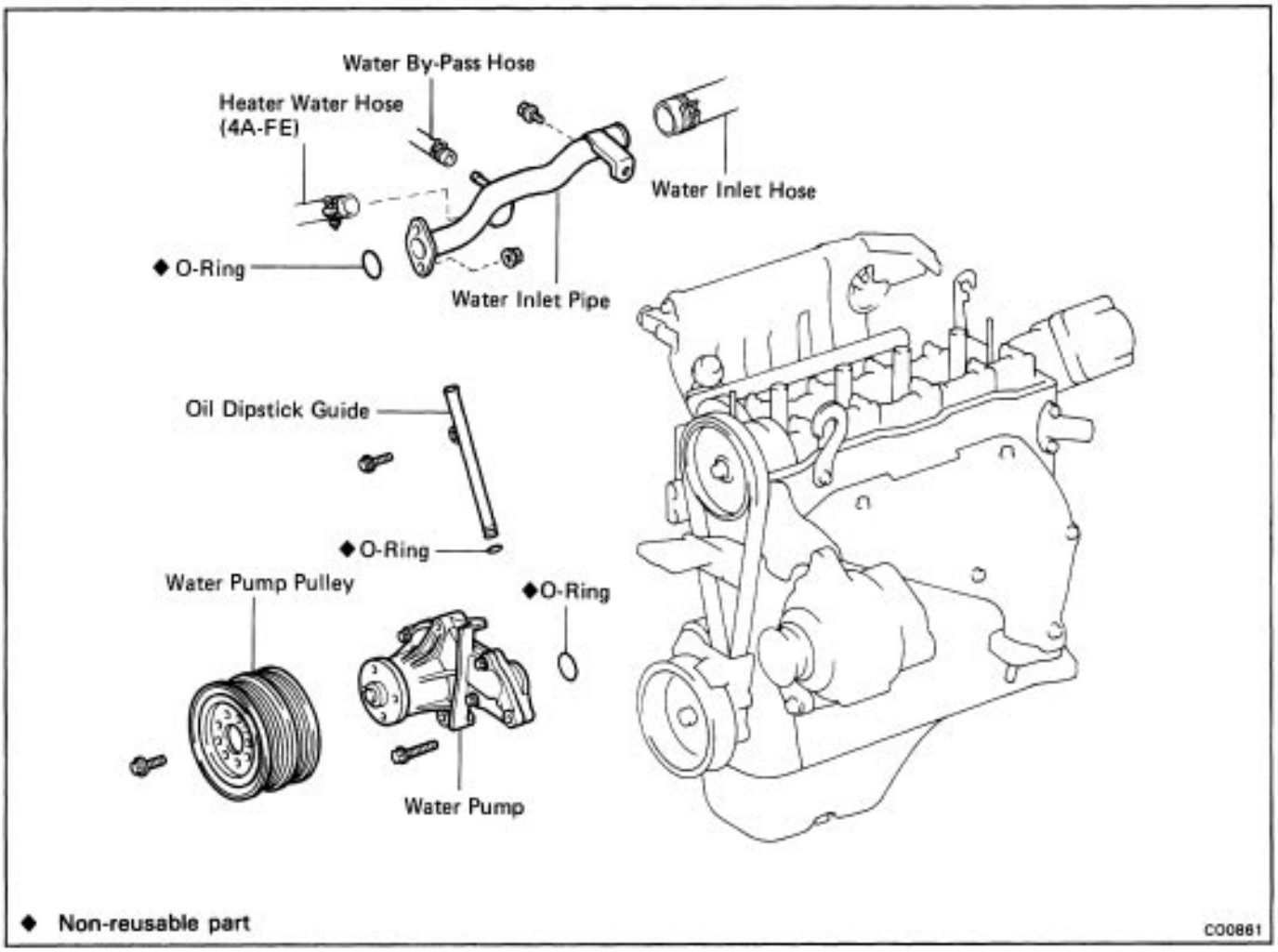

REMOVAL OF WATER PUMP

1. DRAIN COOLANT (See page CO–5)
2. REMOVE RH ENGINE MOUNTING INSULATOR
   4A–FE (See steps 1 to 11 on pages EM–30 to 32)
   4A–GE (See steps 1 to 12 on pages EM–41 to 44)
3. REMOVE NO.3 AND NO.2 TIMING BELT COVERS
   4A–FE (See step 23 on page EM–59)
   4A–GE (See step 26 on page EM–93)

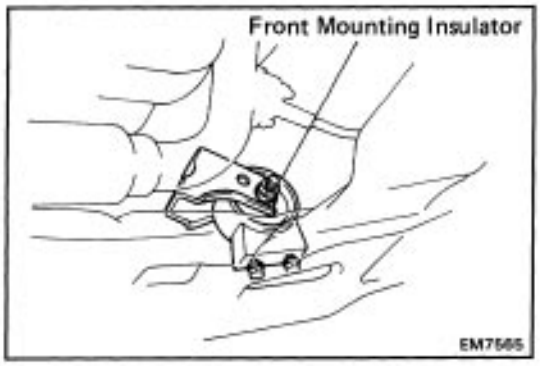

4. (4A–FE w/ PS)

REMOVE FRONT MOUNTING INSULATOR

(a) Remove the hole cover.

(b) Remove the two bolts from the mounting.

(c) Remove the nut, through bolt and front mounting insulator.

5. (4A–FE w/ PS)

REMOVE ELECTRIC COOLING FAN

(See page CO–23**)**

6. REMOVE WATER INLET PIPE

(a) Disconnect the water inlet and water by–pass hoses from the inlet pipe.

(b) (4A–FE)

Disconnect the heater water hose from the inlet pipe.

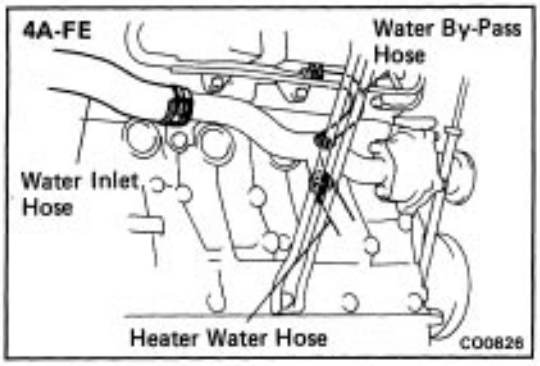

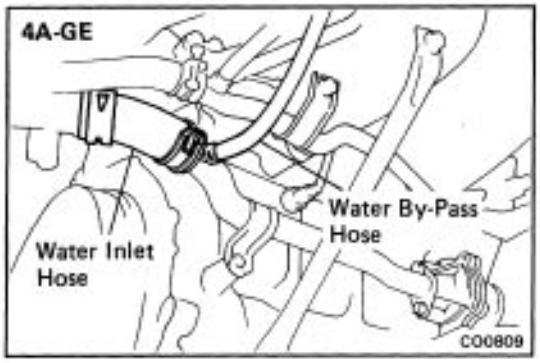

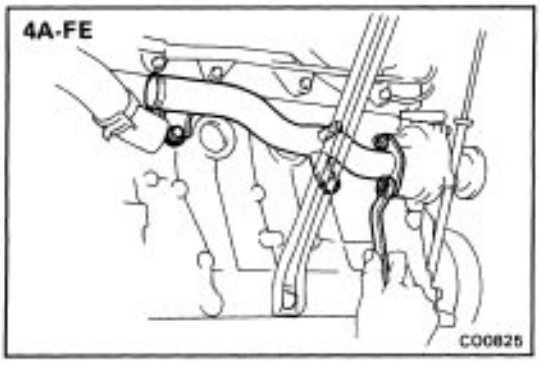

(c) Remove the two nut and clamp bolts.

(d) Remove the water inlet pipe and O–ring.

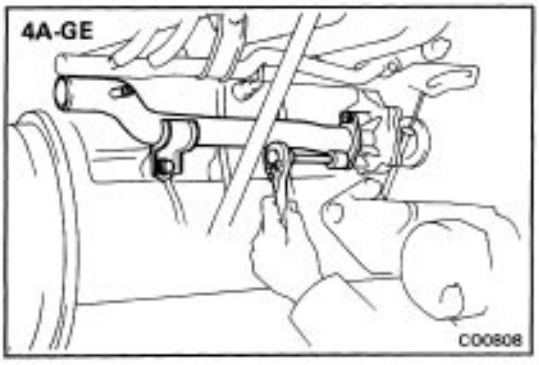

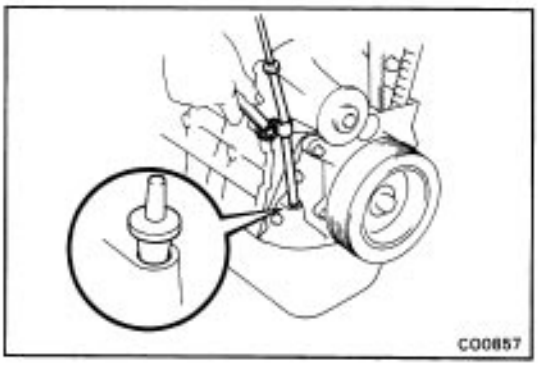

7. REMOVE OIL DIPSTICK GUIDE AND DIPSTICK

Remove the mounting bolt and pull out the dipstick guide and gauge.

HINT: After pulling out the oil dipstick guide, be sure to plug the oil pump body hole.

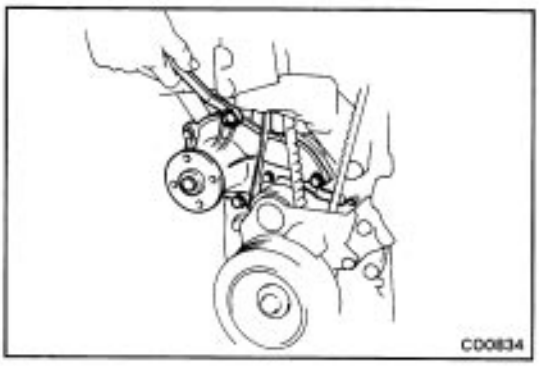

8. REMOVE WATER PUMP

Remove the three bolts and water pump.

NOTICE: Be careful not to get coolant on the timing belt.

9. REMOVE WATER PUMP PULLEY

Remove the four bolts and pump pulley.

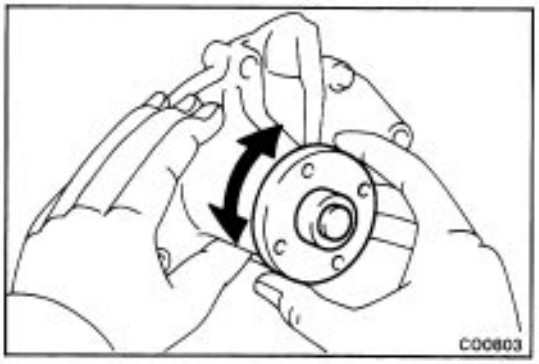

INSPECTION OF WATER PUMP

INSPECT WATER PUMP

Turn the pulley and check that the water pump bearing moves smoothly and quietly.

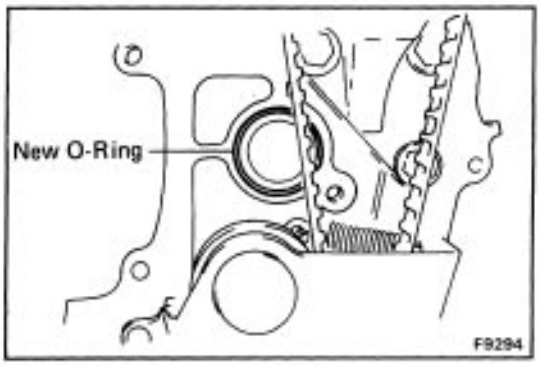

INSTALLATION OF WATER PUMP

(See page CO–6)

1. TEMPORARILY INSTALL WATER PUMP PULLEY

Install the water pump pulley and partially tighten the four bolts.

2. INSTALL WATER PUMP

Place a new O–ring on the block and install the pump with three bolts. Torque the bolts.

Torque: 150 kg–cm (11 ft–lb, 15 N–m)

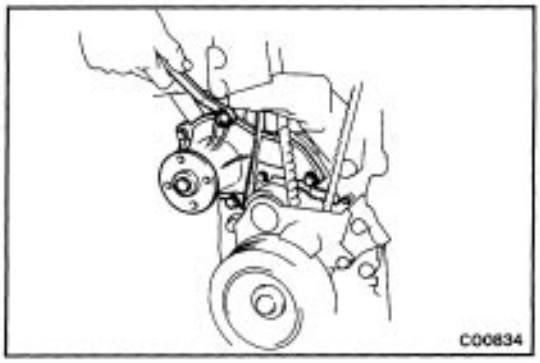

3. INSTALL OIL DIPSTICK GUIDE AND DIPSTICK

(a) Install a new O–ring on the oil dipstick guide.
(b) Apply small amount of engine oil to O–ring.
(c) Push in the oil dipstick guide with the O–ring.
(d) Install the mounting bolt.

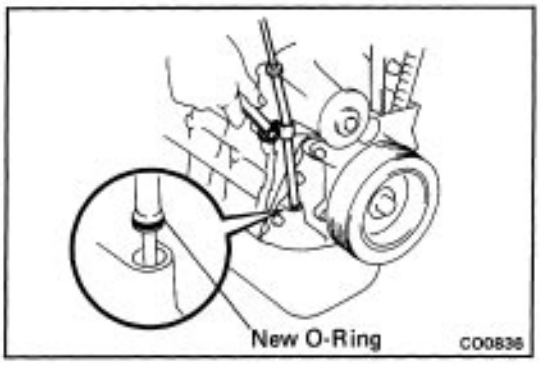

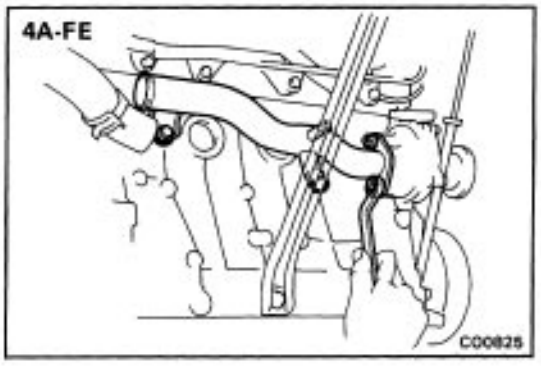

4. INSTALL INLET PIPE

(a) Install the inlet pipe and a new O–ring to the water pump with the two nuts.

Torque: 4A–FE 200 kg–cm (14 ft–lb, 20 N–m)
4A–GE 95 kg–cm (82 in.–lb, 9.3 N–m)

(b) Install the inlet pipe clamp bolt.

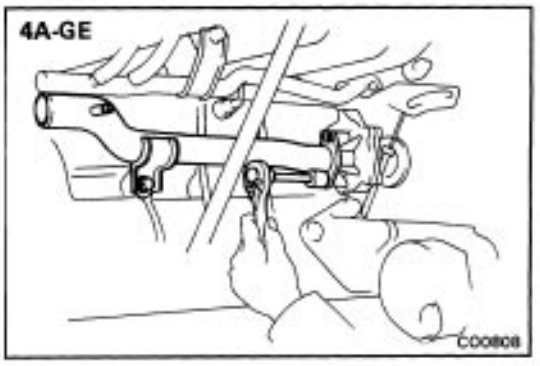

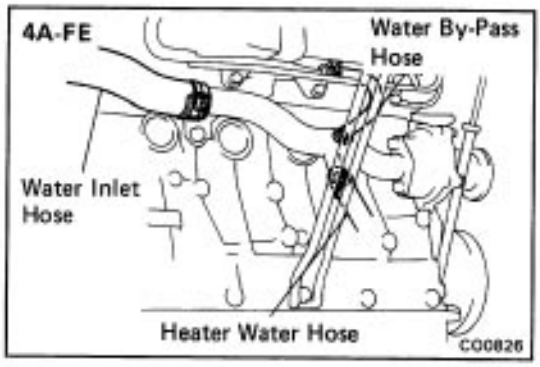

(c) (4A–FE)
Connect the heater water hose to the inlet pipe.
(d) Connect the water inlet and water by–pass hoses tc the inlet pipe.

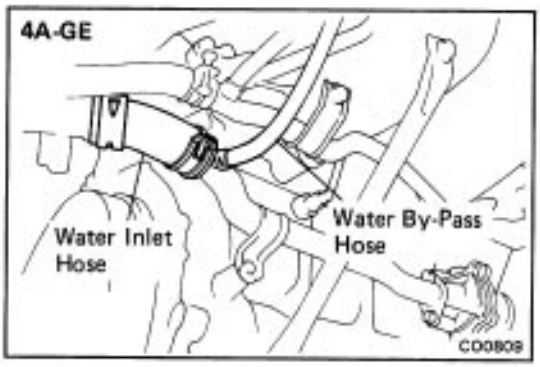

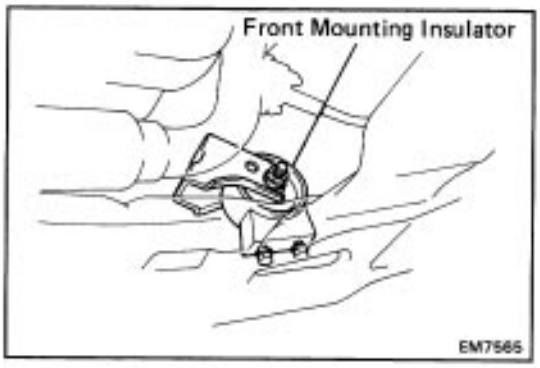

5. (4A–FE w/ PS)
INSTALL ELECTRIC COOLING FAN
(See page CO–23)
6. (4A–FE w/ PS)
INSTALL FRONT MOUNTING INSULATOR
(See step 10 on page EM–160)

7. INSTALL NO.2 AND NO.3 TIMING BELT COVERS
4A–FE (See step 11 on page EM–83)
4A–GE (See step 13 on page EM–113)
8. INSTALL RH ENGINE MOUNTING INSULATOR
4A–FE (See steps 10 to 22 on page EM–38 to 40)
4A–GE (See steps 12 to 24 on page EM–51 to 53)
9. REFILL WITH COOLANT (See page CO–5)
10. START ENGINE AND CHECK FOR LEAKS

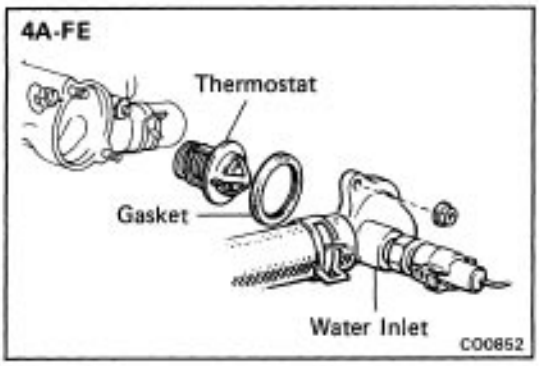

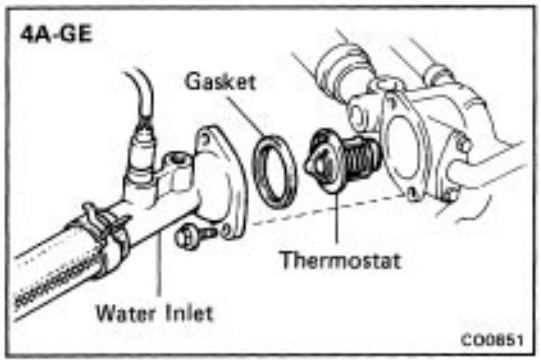

THERMOSTAT

REMOVAL OF THERMOSTAT

1. DRAIN COOLANT (See page CO–5)

2. REMOVE WATER INLET AND THERMOSTAT

(a) Remove the two nuts (4A–FE) or two bolts (4A–GE), the water inlet and thermostat from the water inlet housing.

(b) Remove the gasket from the thermostat.

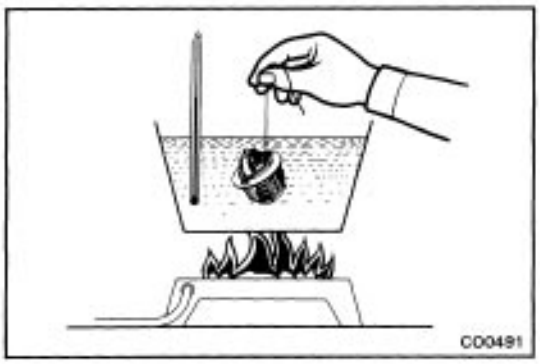

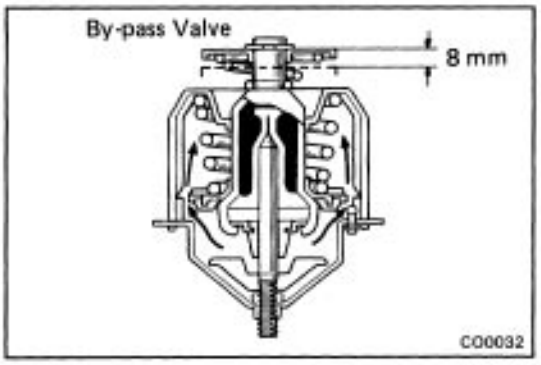

INSPECTION OF THERMOSTAT

HINT: The thermostat is numbered according to the valve opening temperature.

(a) Immerse the thermostat in water and heat the water gradually.

(b) Check the valve opening temperature.

Valve opening temperature: 80 – 84˚C (176 – 183˚F)

If the valve opening temperature is not within specification, replace the thermostat.

(c) Check the valve lift.

Valve lift: 8 mm (0.31 in.) or more at 95˚C (203˚F)

If the valve lift is less than specification, replace the thermostat.

(d) Check that the valve spring is tight when the thermostat is fully closed.

If necessary, replace the thermostat.

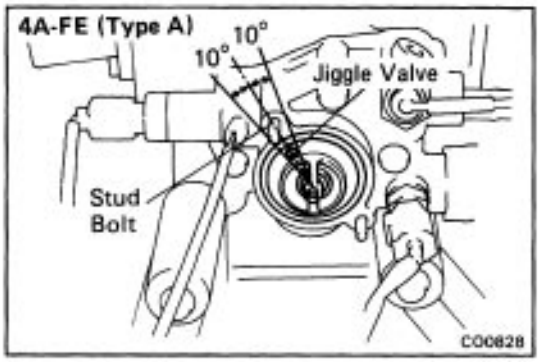

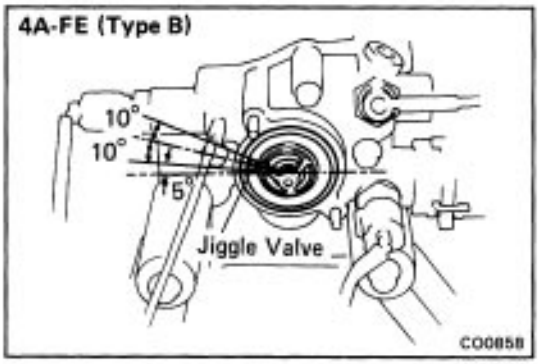

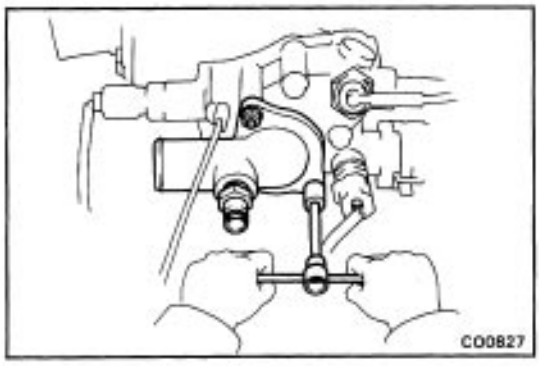

INSTALLATION OF THERMOSTAT

1. PLACE THERMOSTAT IN WATER INLET HOUSING

(4A–FE)

Install a new gasket to the thermostat and align the jiggle valve of the thermostat as shown in the water inlet housing.

(4A–GE)

Install a new gasket to the thermostat and align the jiggle valve of the thermostat so that it is positioned above the water inlet housing.

2. INSTALL WATER INLET

Install the water inlet with the two nuts (4A–FE) or two bolts (4A–GE).

Torque: 95 ft–lb (82 in.–lb, 9.3 ft N–m)

3. REFILL WITH COOLANT (See page CO–5)

4. START ENGINE AND CHECK FOR LEAKS

RADIATOR

CLEANING OF RADIATOR

Using water or steam cleaner, remove any mud and dirt from the radiator core.

NOTICE: If using a high pressure type cleaner, be careful not to deform the fins of the radiator core. If the cleaner nozzle pressure is 30 – 35 kg /cm2 (427 – 498 psi, 2,942 – 3,432 kPa), keep a distance of at least 40 – 50 cm (15.75 – 19.69 in.) between the radiator core and cleaner nozzle.

INSPECTION OF RADIATOR

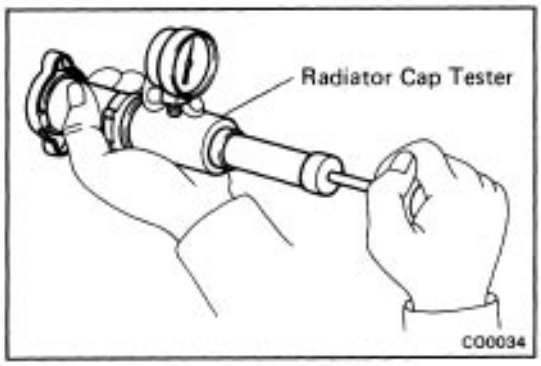

1. CHECK RADIATOR CAP

Using a radiator cap tester, pump the tester until the relief valve opens. Check that the valve opens between 0.75 kg/Cm2 (10.7 psi, 74 kPa) and 1.05 kg/cm2 (14.9 psi,103 kPa).

Check that the pressure does not drop rapidly when pressure on the cap is below 0.6 kg/cm2 (8.5 psi, 59 kPa).

If either check is not within limits, replace the cap.

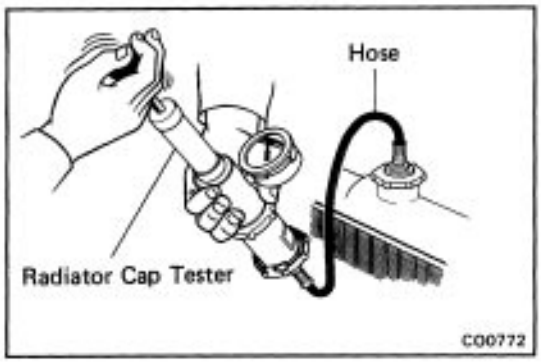

2. CHECK COOLING SYSTEM FOR LEAKS

(a) Fill the radiator with coolant and attach a radiator cap tester–.

(b) Warm up the engine.

(c) Pump it to 1.2 kg/cm2 (17 psi,118 kPa), check that pressure does not drop.

If the pressure drops, check for leaks from the hoses, radiator or water pump. If no external leaks are found, check the heater core, block and head.

REMOVAL OF RADIATOR

1. DRAIN COOLANT (See page CO–5)

2. (A/T)

DISCONNECT TWO COOLER HOSES

HINT:

- Be careful as some oil will leak out. Catch it in a suitable container.
- Plug the hose to prevent oil from escaping.

3. DISCONNECT RESERVOIR TANK WITH HOSE

4. DISCONNECT FAN MOTOR CONNECTOR

5. DISCONNECT TWO RADIATOR HOSES

6. REMOVE TWO RADIATOR SUPPORTS AND RADIATOR

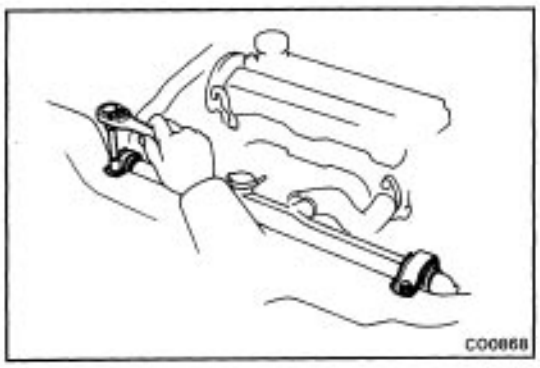

COMPONENTS

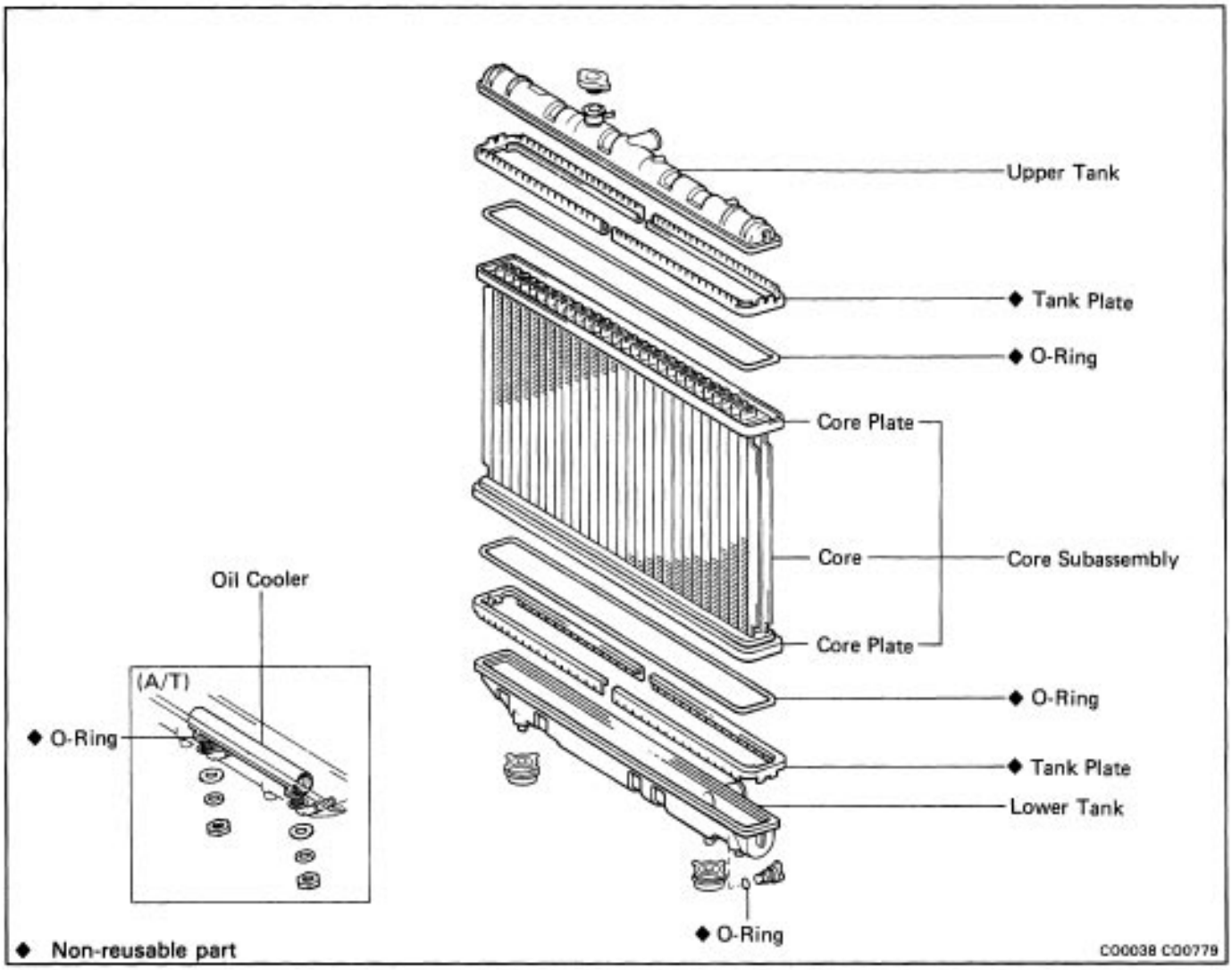

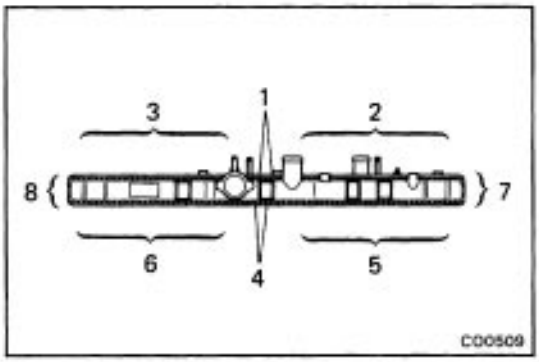

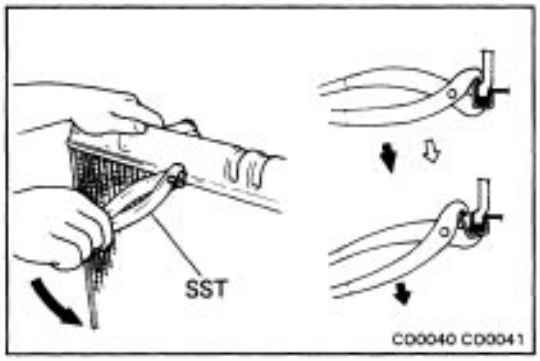

DISASSEMBLY OF RADIATOR

1. REMOVE TANK PLATE

(a) Raise the claws of the tank plates with SST in the numerical order shown in the figure.
SST 09230–00010

NOTICE: Be careful not to damage the core plate.

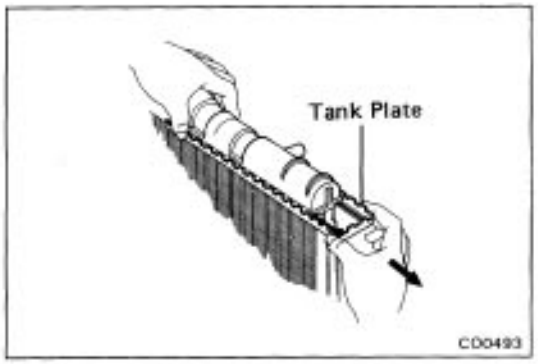

(b) Pull the tank plates outward.

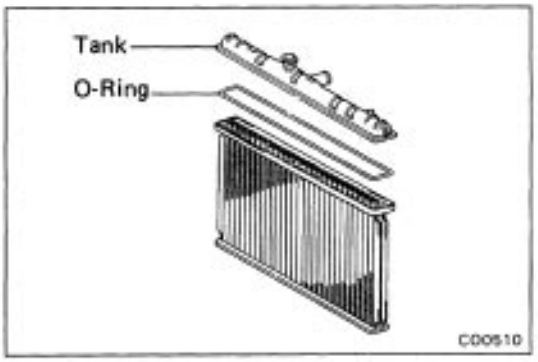

2. REMOVE TANK AND O–RING

(a) Pull the tank upward.

(b) Remove the O–ring.

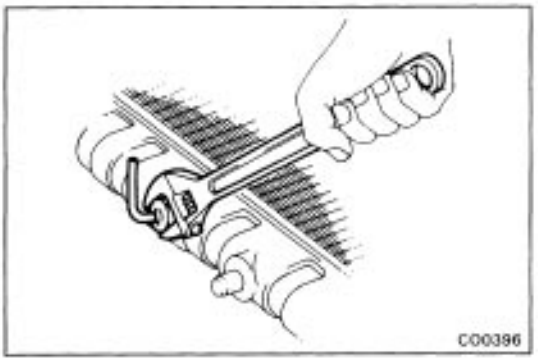

3. (A/T)

REMOVE OIL COOLER FROM LOWER TANK

(a) Remove the two nuts, spring washers, plate washers and oil cooler.

(b) Remove the O–ring from the oil cooler.

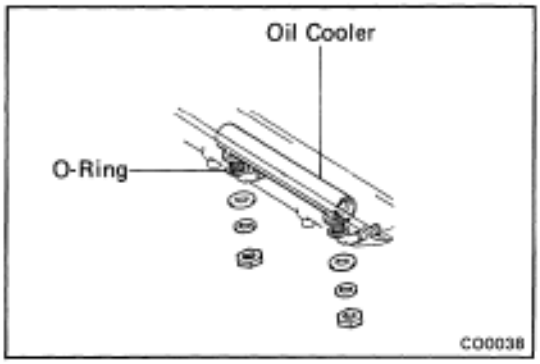

ASSEMBLY OF RADIATOR

(See page CO–14)

1. (A/T)

INSTALL OIL COOLER TO LOWER TANK

(a) Clean the O–ring contact surface of the lower tank and oil cooler.

(b) Install a new O–ring to the oil cooler.

(c) Install the oil cooler with the 0–rings to the lower tank.

(d) Install the plate washers, spring washers and nuts.

2. INSPECT CORE PLATE

Inspect the core plate for damage.

HINT:

- If the sides of the core plate groove are deformed, reassembly of the tank will be impossible.
- Therefore, first correct any deformation with pliers or like object. Water leakage will result if the bottom of the core plate groove is damaged or dented. Therefore, repair or replace if necessary.

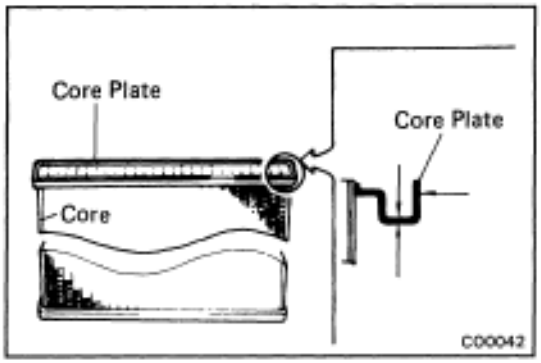

3. INSTALL NEW O–RING AND TANK

HINT:

- Clean the tank and core plate.

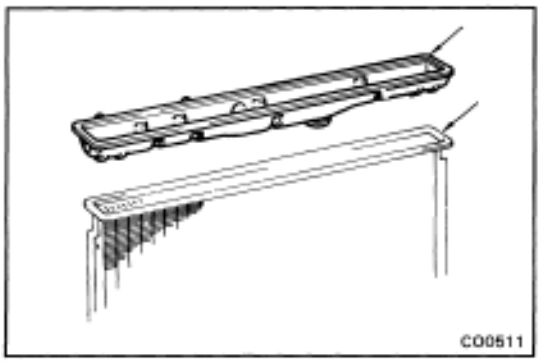

- Take out any twists.

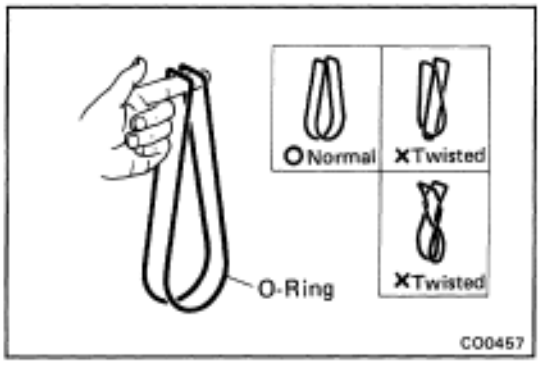

4. INSTALL TANK PLATE

Install the tank plates from both ends in the direction of the arrows. Insert to where the portions shown by the arrows contact with the tank.

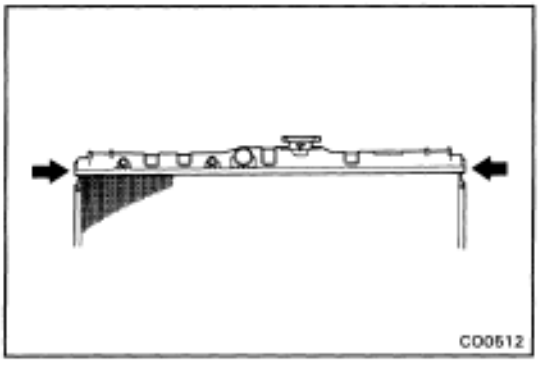

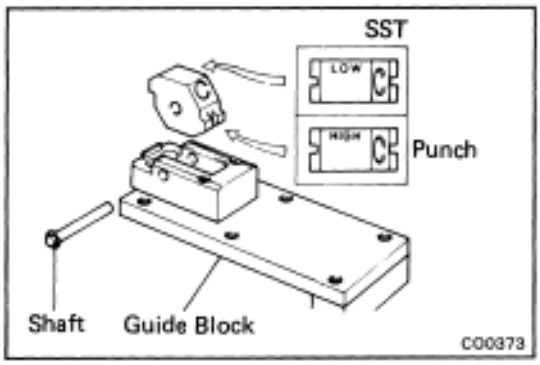

5. STAKE CLAW OF TANK PLATE

(a) Set the punch of SST to ”LOW”.
SST 09230–00010

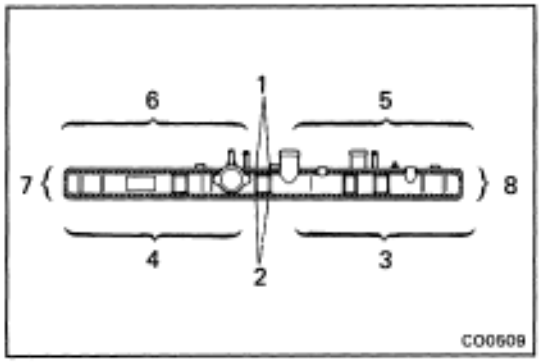

(b) Stake the claws of the tank plates with SST in the numerical order shown in the figure.
SST 09230–00010

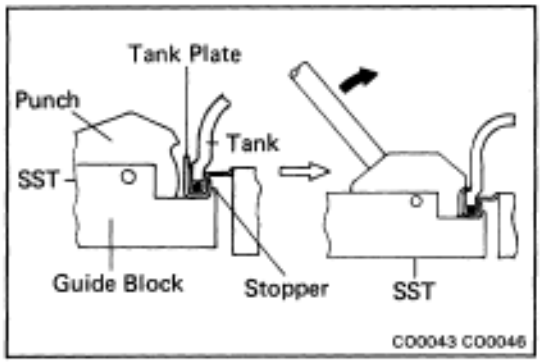

NOTICE: If the bottom of the core plate is staked with the SST on the guide block stopper, it may result in water leakage.
SST 09230–00010

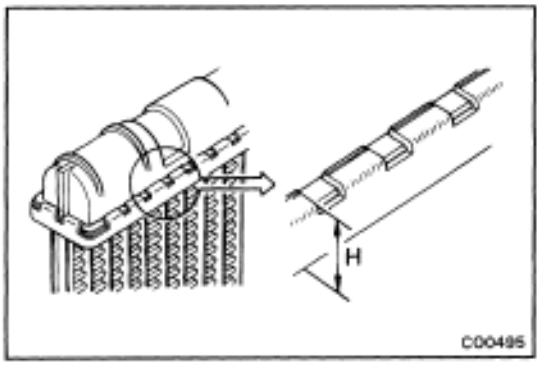

HINT:

- Stake with just enough pressure to leave a mark on the claw. The staked plate height (H) should be as follows: **Plate height: 9.08 – 9.43 mm (0.3575 – 0.3713 in.)**

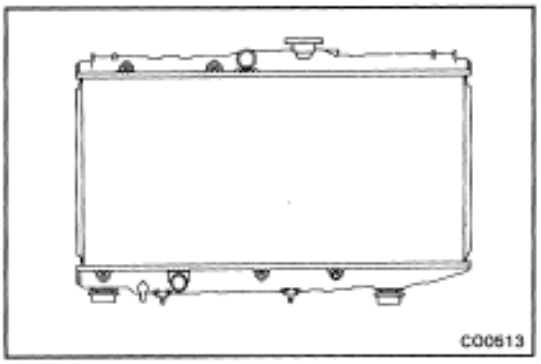

- Do not stake the areas protruding around the pipes, brackets or tank ribs.

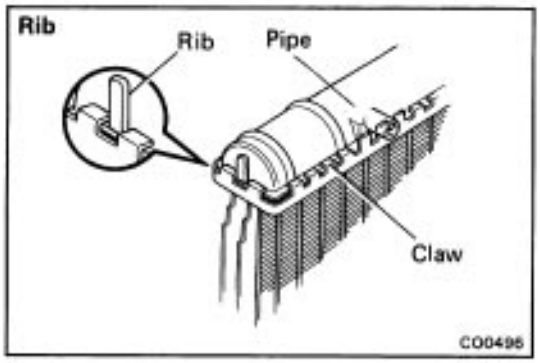

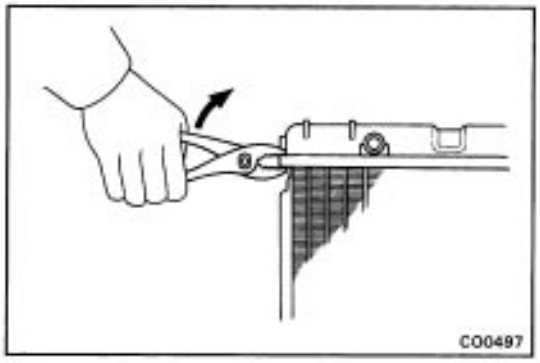

- The points shown in the illustration cannot be staked with the SST. Use a pliers or like object and be careful not to damage the core plates.

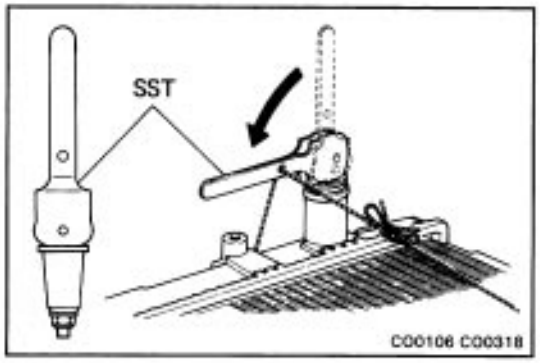

6. INSPECT FOR WATER LEAKS

(a) Tighten the drain plug.

(b) Plug the inlet and outlet pipes of the radiator with SST.
SST 09230–00010

(c) Using a radiator cap tester, apply pressure to the radiator.
Test pressure: 1.5 kg/Cm2 (21 psi, 147 kPa)

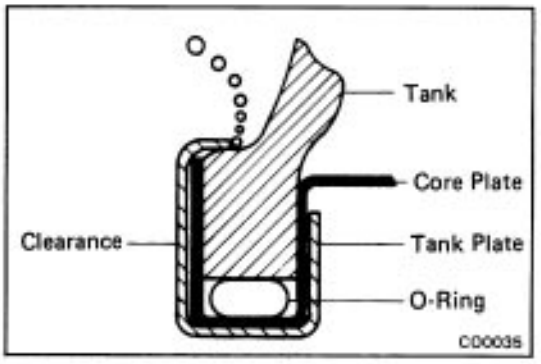

(d) Inspect for water leaks.
HINT: On radiators with resin tanks, there is a clearance between the core plate and tank plate where a minute amount of air will remain, giving the appearance of an air leak when the radiator is submerged in water. Therefore, before performing the water leak test, first switch the radiator around in the water until all air bubbles disappear.

7. PAINT TANK PLATE

HINT: If the water leak test checks out okay, allow the radiator to completely dry and then paint the tank plates.

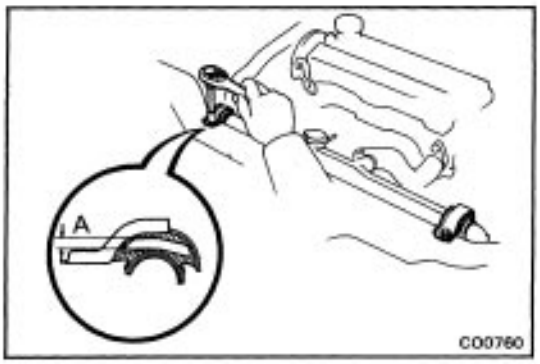

INSTALLATION OF RADIATOR

1. INSTALL RADIATOR AND SUPPORT

Place the radiator in installed position and install the two supports with two bolts.

HINT: After installation, confirm that the rubber cushion (A) of the support is not depressed.

2. CONNECT TWO RADIATOR HOSES

3. CONNECT FAN MOTOR CONNECTOR

4. (A/T)

CONNECT TWO COOLER HOSES

5. CONNECT COOLANT RESERVOIR TANK WITH HOSE

6. REFILL WITH COOLANT

(See page CO–5)

7. CHECK AUTOMATIC TRANSMISSION FLUID LEVEL

(See pages MA– 10 and 11)

Fluid type: 2WD ATF DEXRON© II

4WD ATF Type T

NOTICE: Do not overfill

8. START ENGINE AND CHECK FOR LEAKS

ELECTRIC COOLING FAN

COMPONENTS

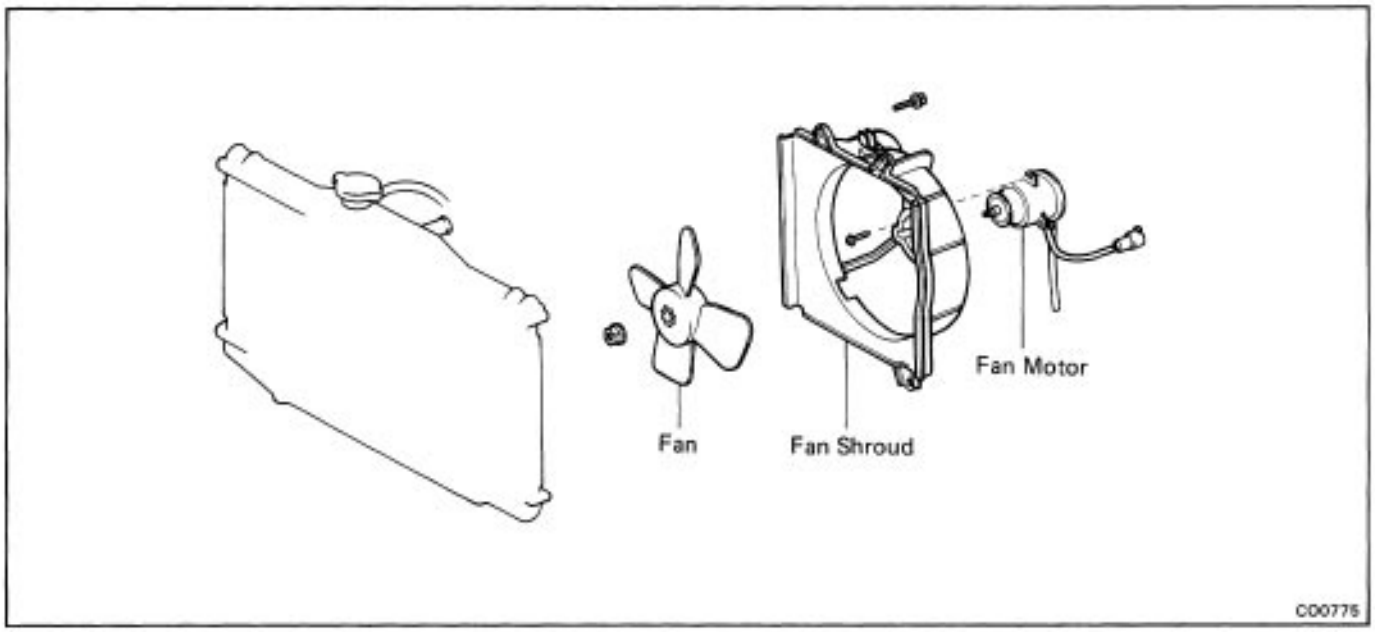

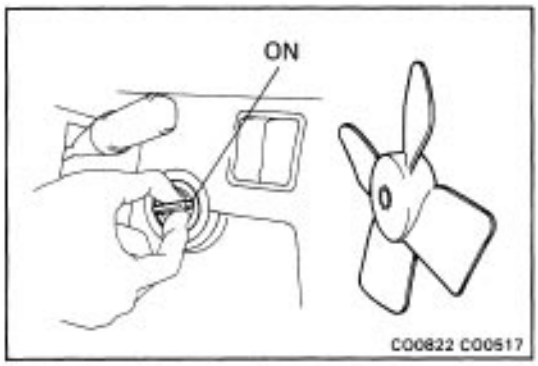

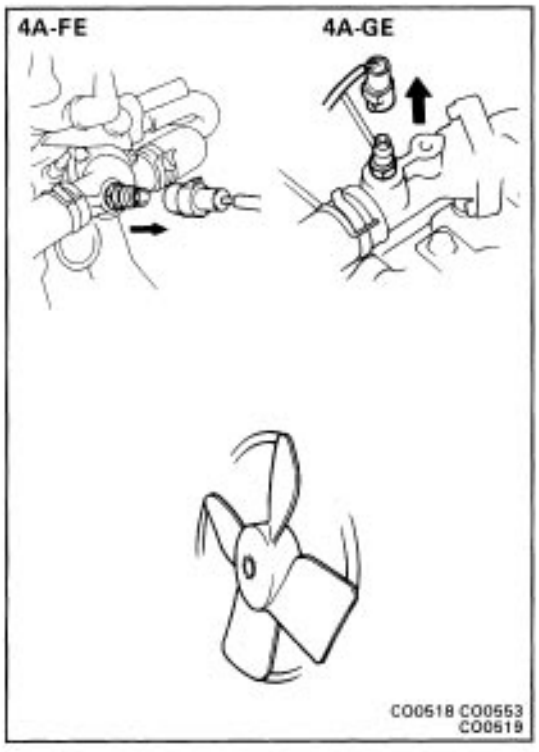

ON–VEHICLE INSPECTION

Low Coolant Temperature [below 83°C (181° F)]

1. TURN IGNITION SWITCH ON

Check that the fan does not rotate.

If it does, check the fan relay and temperature switch, and check for a separated connector or severed wire between the relay and temperature switch.

2. DISCONNECT TEMPERATURE SWITCH CONNECTOR

Check that the fan rotates.

If it does not, check the fan relay, fan motor, ignition relay and fuse, and check for a short circuit between the fan relay and temperature switch.

3. CONNECT TEMPERATURE SWITCH CONNECTOR

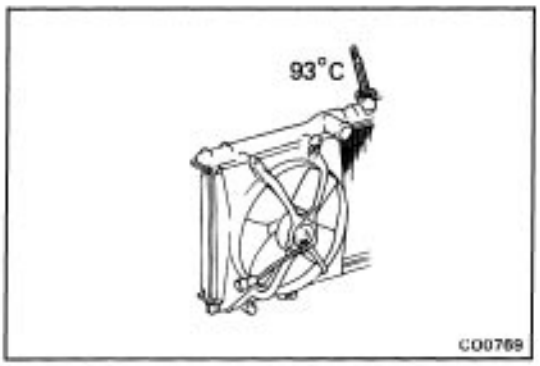

High Coolant Temperature [above 93°C (199°F]

4. START ENGINE

(a) Raise engine coolant to above 93°C (199°F).

(b) Confirm that the fan rotates.

If it doesn't, replace the temperature switch.

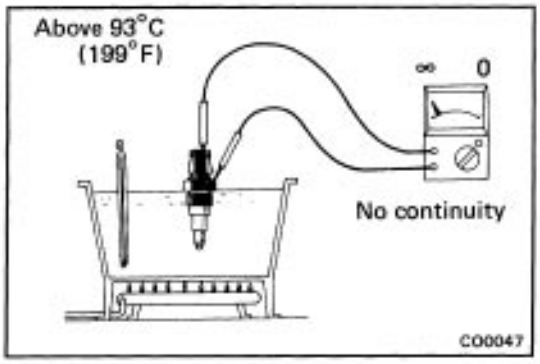

INSPECTION OF ELECTRIC COOLING FAN

1. INSPECT TEMPERATURE SWITCH

HINT: On the water inlet housing.

(a) Using an ohmmeter, check that there is no continuity when the coolant temperature is above 93°C (199° F).

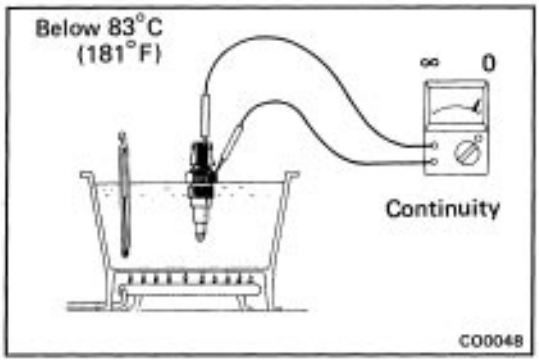

(b) Check that there is continuity when the coolant temperature is below 83 °C (181 °F).

If continuity is not as specified, replace the switch.

2. INSPECT ENGINE MAIN RELAY

(See page CH–16)

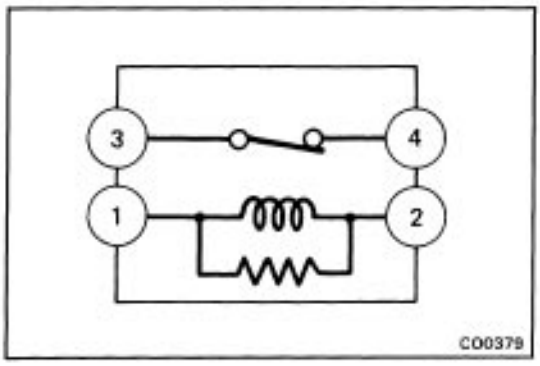

3. INSPECT COOLING FAN RELAY

HINT: The relay located in the engine compartment relay box.

A. Inspect Relay Continuity

(a) Using an ohmmeter, check that there is continuity between terminals 1 and 2.

(b) Check that there is continuity between terminals 3 and 4.

If continuity is not as specified, replace the relay.

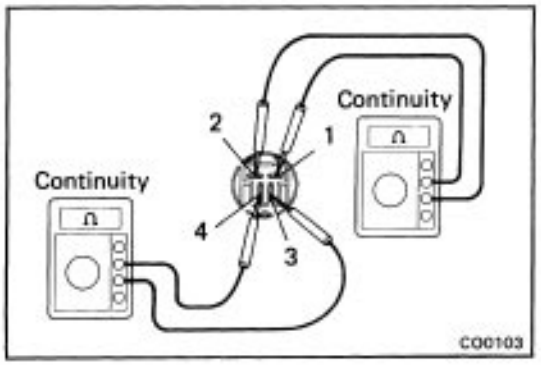

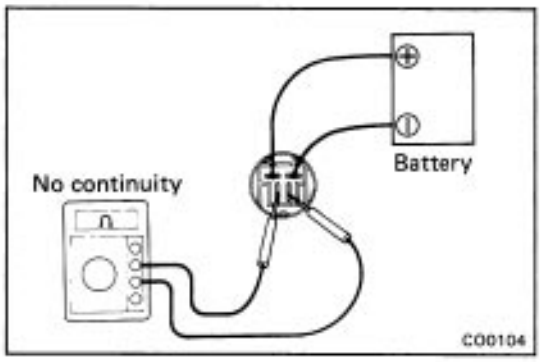

B. Inspect Relay Operation

(a) Apply battery voltage across terminals 1 and 2.

(b) Check that there is no continuity between terminals 3 and 4.

If operation is not described, replace the relay.

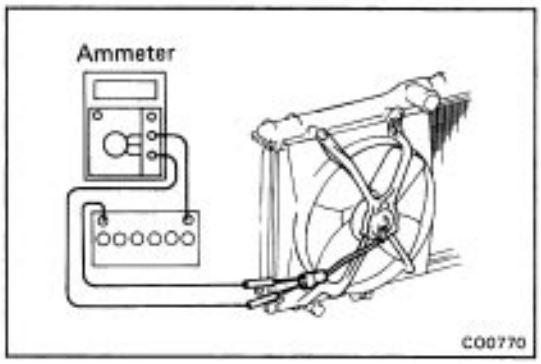

4. INSPECT FAN MOTOR

(a) Connect the battery and ammeter to the fan motor connector.

(b) Check to see that the motor rotates smoothly, and current is as follows:

Cur**rent:**

Coupe (Canada) 8.8 – 10.8 A

Others 5.8 – 7.4 A

REMOVAL OF ELECTRIC COOLING FAN

1. DISCONNECT FAN MOTOR CONNECTOR

2. REMOVE RESERVOIR TANK

3. (4A–FE)

DRAIN COOLANT (See page CO–5)

4. (4A–FE)

DISCONNECT RADIATOR INLET HOSE

5. REMOVE ELECTRIC COOLING FAN WITH FAN SHROUD

DISASSEMBLY OF ELECTRIC COOLING FAN

(See page CO–20)

1. REMOVE FAN

Remove the nut and fan.

2. REMOVE FAN MOTOR

Remove the three screws and fan motor.

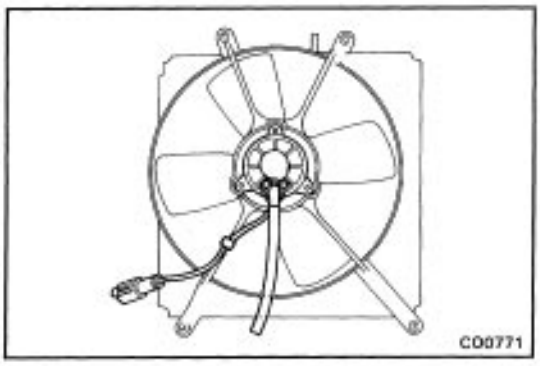

ASSEMBLY OF ELECTRIC COOLING FAN

(See page CO–20)

1. INSTALL FAN MOTOR

(a) Install the fan motor with three screws.

(b) Install the drain hose and wire cramp to the fan shroud.

2. INSTALL FAN

Install the fan with the nut.

INSTALLATION OF ELECTRIC COOLING FAN

1. INSTALL ELECTRIC COOLING FAN WITH FAN SHROUD

2. (4A–FE)

CONNECT RADIATOR INLET HOSE

3. INSTALL RESERVOIR TANK

4. CONNECT FAN MOTOR CONNECTOR

5. (4A–FE)

REFILL WITH COOLANT (See page CO–5)

EMISSION CONTROL SYSTEMS

4A–FE ENGINE

SYSTEM PURPOSE

System	Abbreviation	Purpose
Positive crankcase ventilation	PCV	Reduces blow–by gas (HQ
Fuel evaporative emission control	EVAP	Reduces evaporative HC
Dash pot	DP	Reduces HC and CO
Exhaust gas recirculation	EGR	Reduces NOx
Three–way catalyst	TWC	Reduces HC, CO, and NOx
Electronic fuel injection*	EFI	Regulates all engine conditions for reduction of exhaust emissions.

* For inspection and repair of the EFI System, refer to ER section.

COMPONENT LAYOUT AND SCHEMATIC DRAWING

(2WD Federal and Canada)

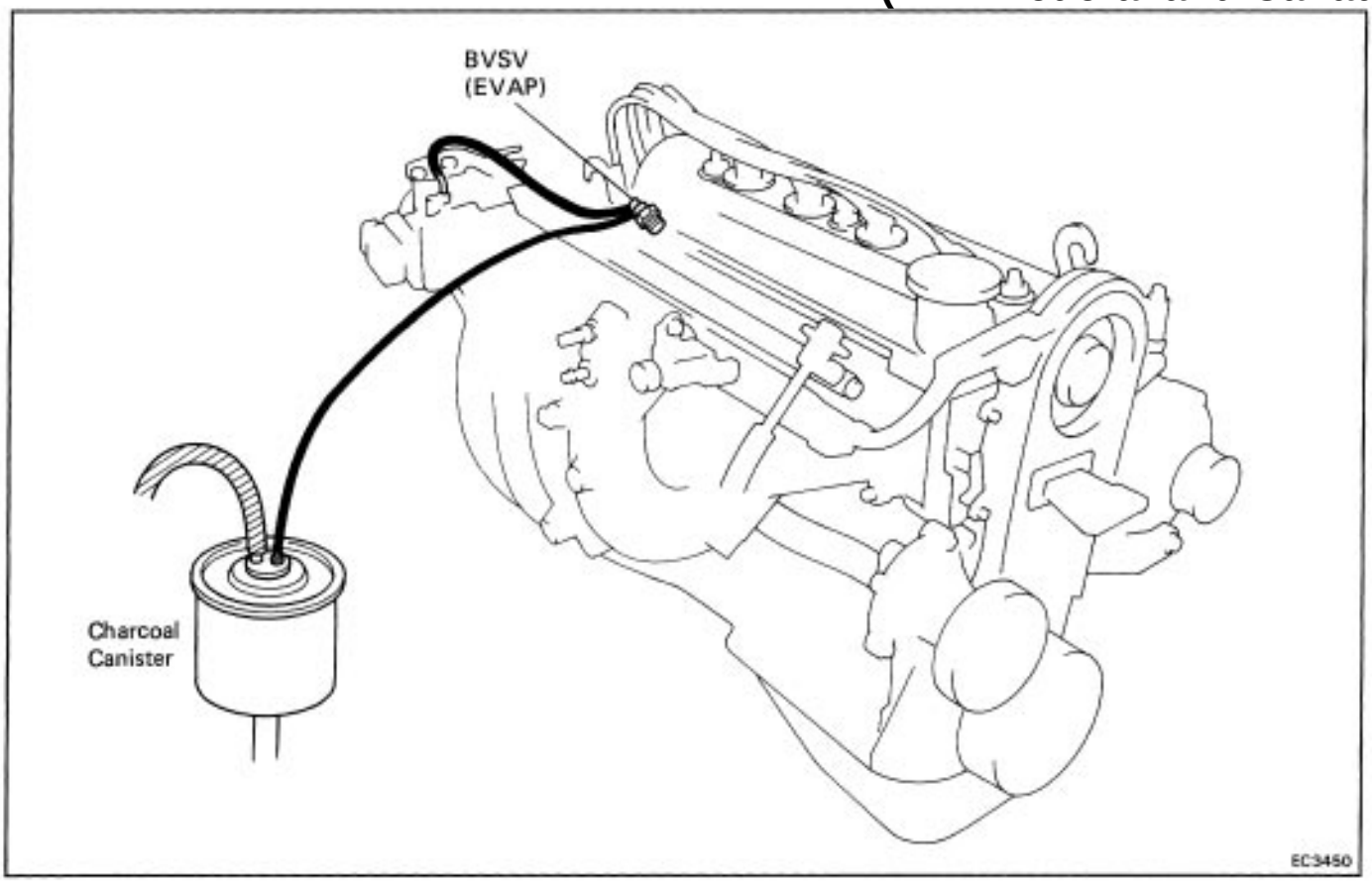

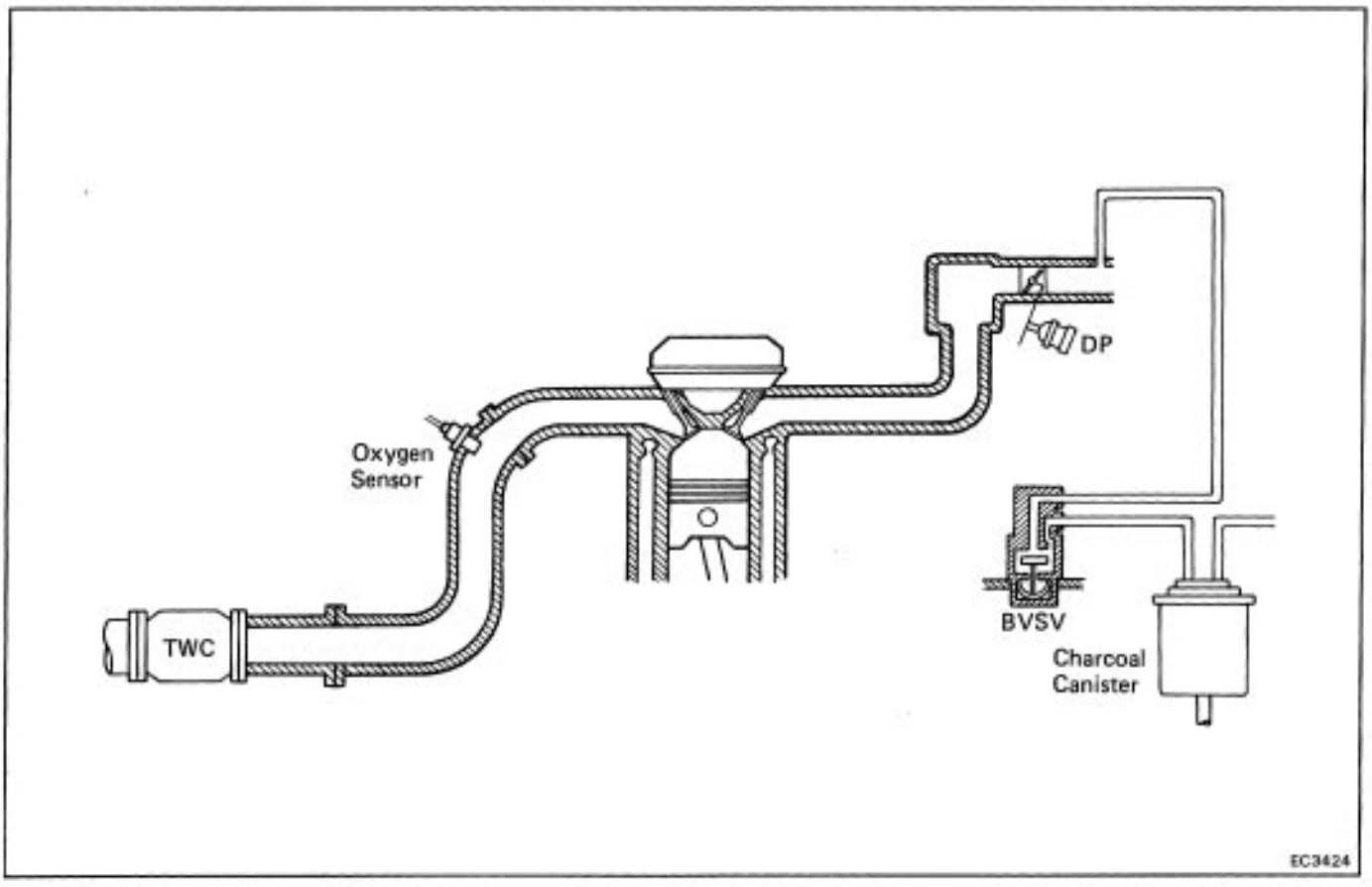

COMPONENT LAYOUT AND SCHEMATIC DRAWING

(2WD California and 4WD)

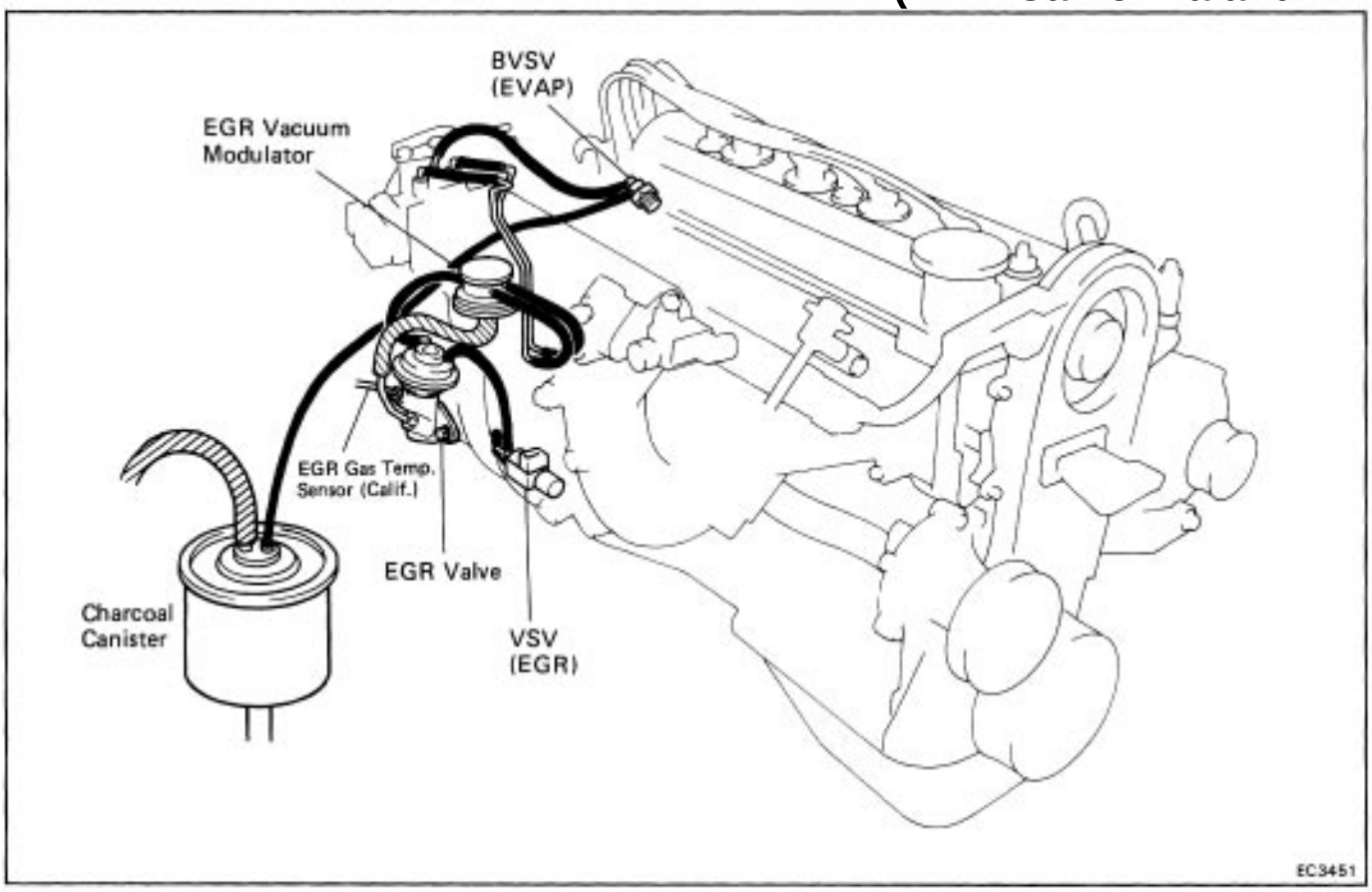

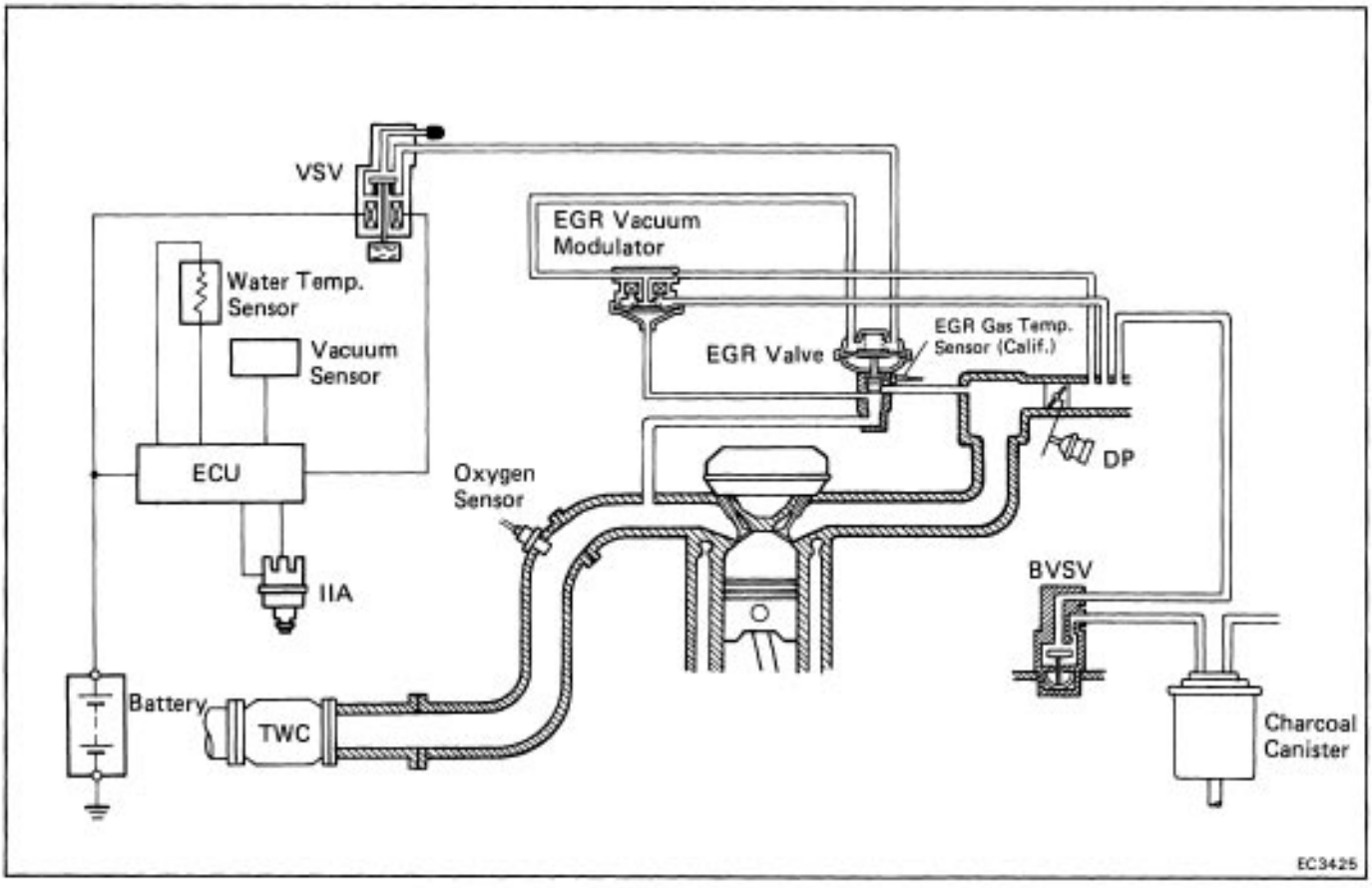

POSITIVE CRANKCASE VENTILATION (PCV) SYSTEM

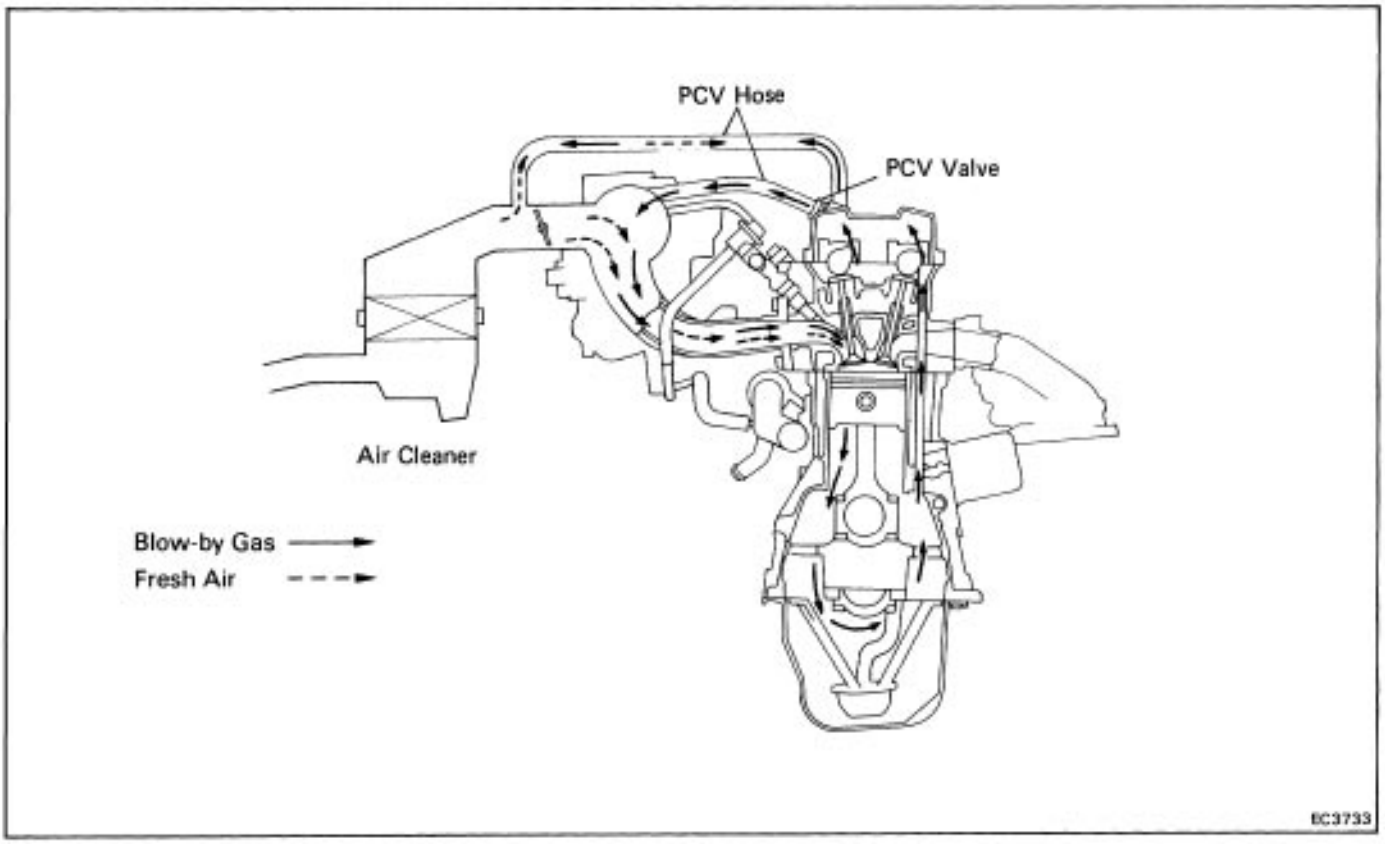

To reduce HC emissions, crankcase blow–by gas (HQ is routed through the PCV valve to the intake manifold for combustion in the cylinders.

Engine not Running or if Backfiring

Intake Manifold Side



Cylinder Head Side

EC1001

○ PCV VALVE IS CLOSED.

Normal Operation

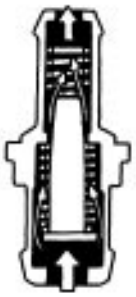

EC1002

○ PCV VALVE IS OPEN.

○ VACUUM PASSAGE IS LARGE.

Idling or Decelerating

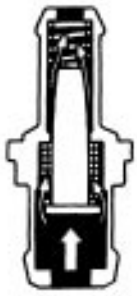

EC1003

○ PCV VALVE IS OPEN.

○ VACUUM PASSAGE IS SMALL.

Acceleration or High Load



EC1004

○ PCV VALVE IS FULLY OPEN.

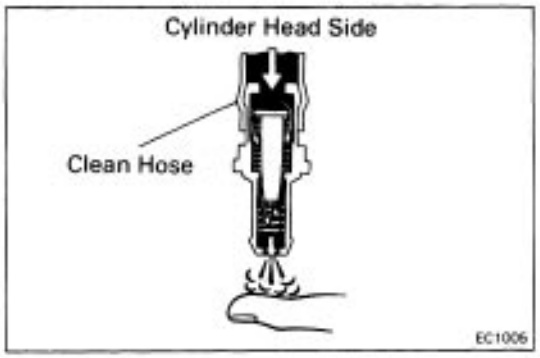

INSPECTION OF PCV VALVE

1. REMOVE PCV VALVE

2. ATTACH CLEAN HOSE TO PCV VALVE

3. BLOW AIR FROM CYLINDER HEAD SIDE

Check that air passes through easily.

NOTICE: Do not suck air through the valve.

Petroleum substances inside the valve are harmful.

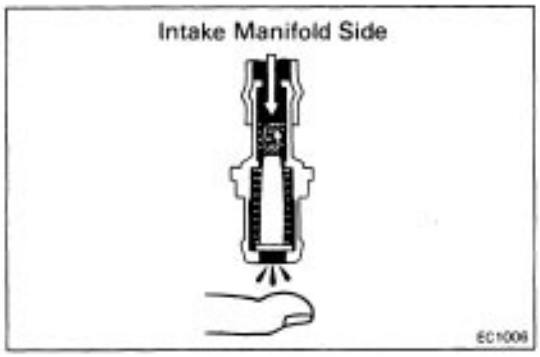

4. BLOW AIR FROM INTAKE MANIFOLD SIDE

Check that air passes through with difficulty.

If the PCV valve fails either of the checks, replace it.

5. REINSTALL PCV VALVE

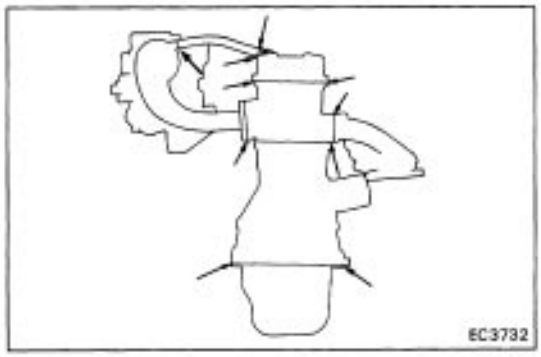

INSPECTION OF PCV HOSES AND CONNECTIONS

VISUALLY INSPECT HOSES, CONNECTIONS AND GASKETS

Check for cracks, leaks or damage.

FUEL EVAPORATIVE EMISSION CONTROL (EVAP) SYSTEM

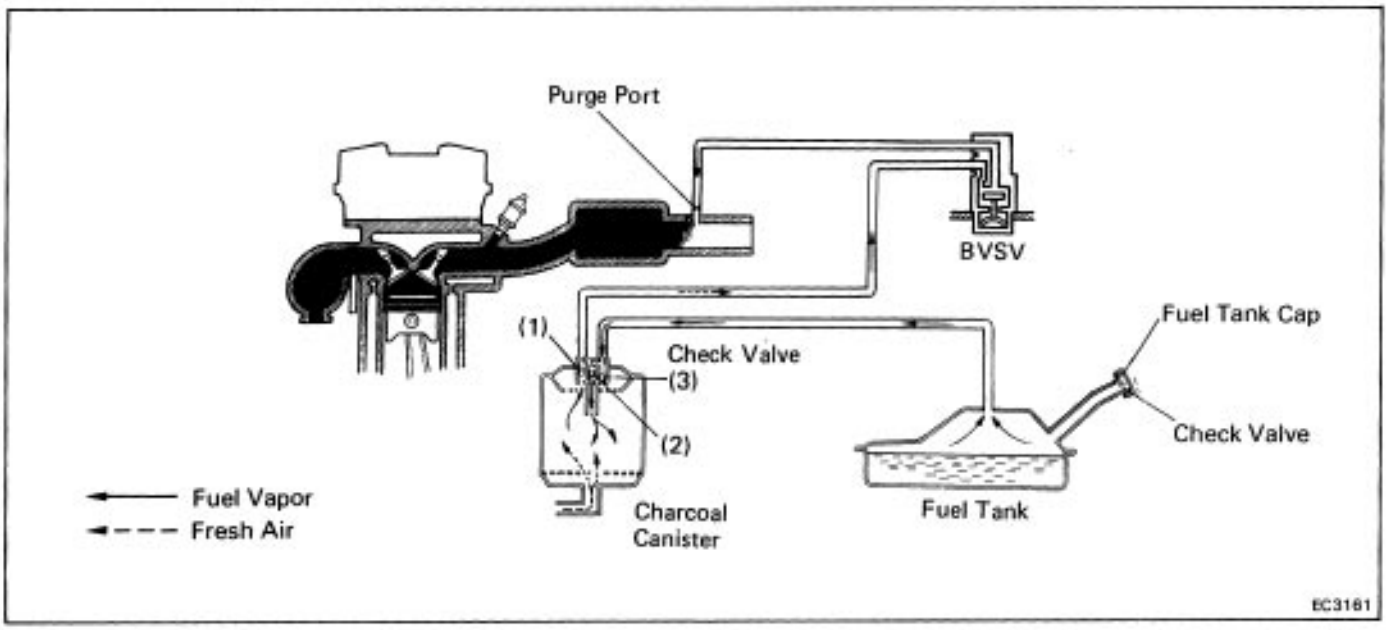

To reduce HC emission, evaporated fuel from the fuel tank is routed through the charcoal canister to the intake manifold for combustion in the cylinders.

Coolant Temp.	BVSV	Throttle Valve Opening	Check Valve			Check Valve in Cap	Evaporated Fuel (HC)
			(1)	(2)	(3)		
Below 40°C (104°F)	CLOSED	—	—	—	—	—	HC from tank is absorbed into the canister
Above 54°C (129°F)	OPEN	Positioned below purge port	CLOSED	—	—	—	
		Positioned above purge port	OPEN	—	—	—	HC from canister is led into air intake chamber
High pressure in tank	—	—	—	OPEN	CLOSED	CLOSED	HC from tank is absorbed into the canister
High vacuum in tank	—	—	—	CLOSED	OPEN	OPEN	Air is led into the fuel tank.

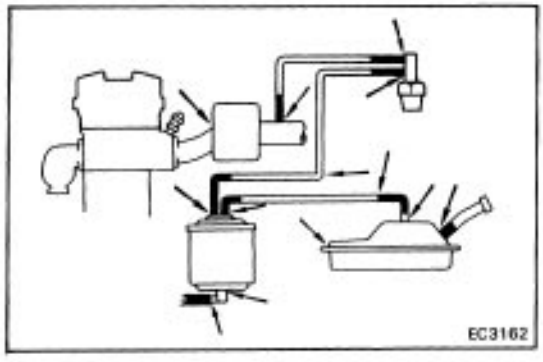

INSPECTION OF FUEL VAPOR LINES, FUEL

TANK AND TANK CAP

1. VISUALLY INSPECT LINES AND CONNECTIONS

Look for loose connections, sharp bends or damage.

2. VISUALLY INSPECT FUEL TANK

Look for deformation, cracks or fuel leakage.

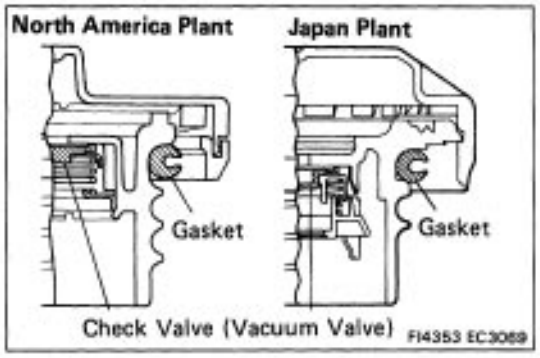

3. VISUALLY INSPECT FUEL TANK CAP

Look for a damaged or deformed gasket and cap.
If necessary, repair or replace the cap.

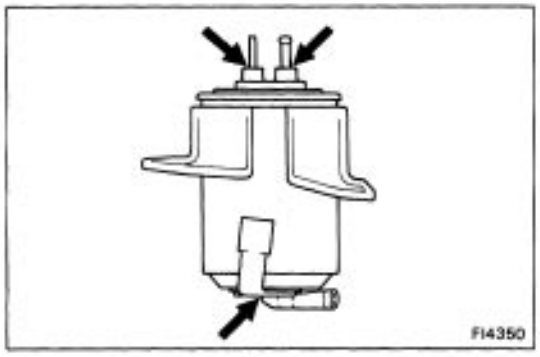

INSPECTION OF CHARCOAL CANISTER

1. REMOVE CHARCOAL CANISTER

2. VISUALLY INSPECT CHARCOAL CANISTER CASE

Look for cracks or damage.

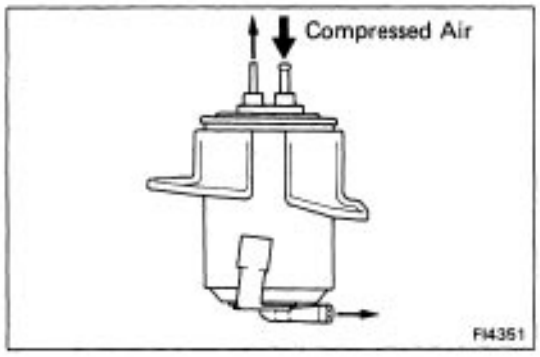

3. CHECK FOR CLOGGED FILTER AND STUCK CHECK VALVE

(a) Using low pressure compressed air, blow into the tank pipe and check that air flows without resistance from the other pipes.

(b) Blow into the purge pipe and check that air does not flow from the other pipes.
If a problem is found, replace the charcoal canister–.

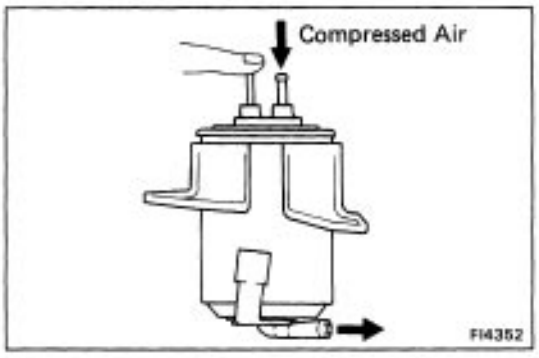

4. CLEAN FILTER IN CANISTER

Clean the filter by blowing 3 kg /cm2 (43 psi, 294 kPa) of air into the tank pipe while holding the other upper canister pipe closed.
HINT:

- Do not attempt to wash the canister.
- No activated carbon should come out.

5. INSTALL CHARCOAL CANISTER

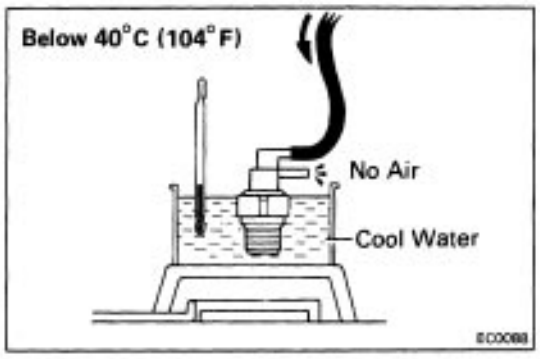

INSPECTION OF BVSV

CHECK BVSV BY BLOWING AIR INTO PIPE

(a) Drain the coolant from the radiator into a suitable container.

(b) Remove the BVSV.

(c) Cool the BVSV to below 40˚C (104˚F) with cool water.

(d) Blow air into a pipe and check that the BVSV is closed.

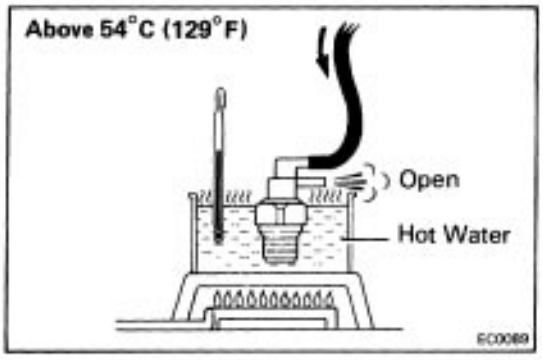

(e) Heat the BVSV to above 540C 0 290F) with hot water.

(f) Blow air into a pipe and check that the BVSV is open.

If a problem is found, replace the BVSV.

(g) Apply liquid sealer to the threads of the BVSV and reinstall.

(h) Fill the radiator with coolant.

DASH POT (DP) SYSTEM

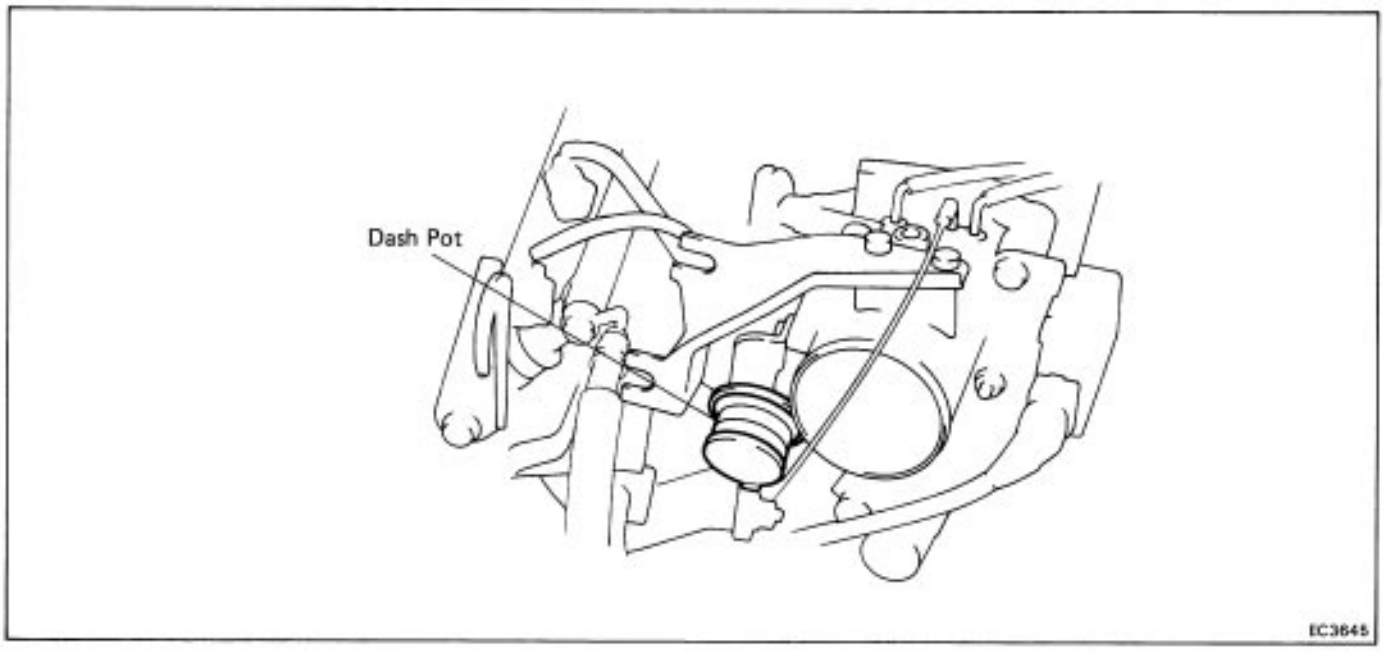

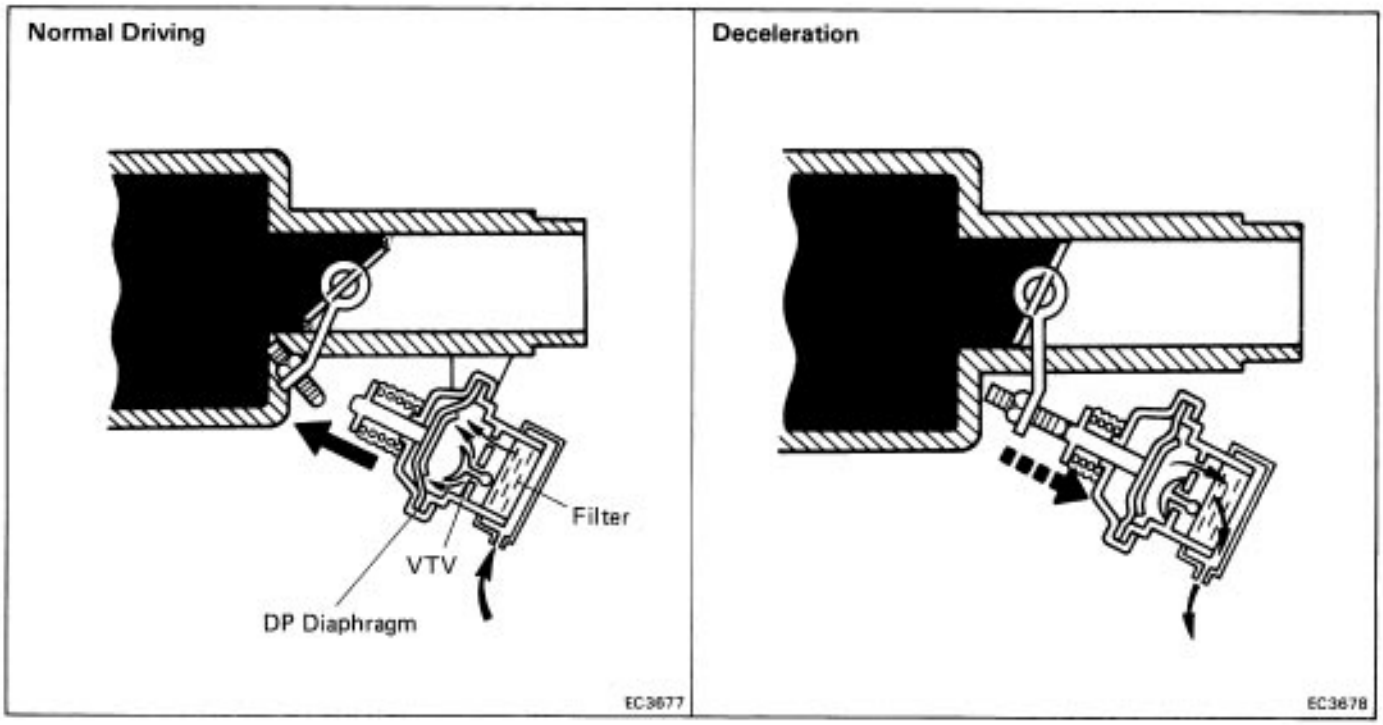

To reduce HC and CO emissions, when decelerating the dash pot opens the throttle valve slightly more than at idle. This causes the air–fuel mixture to burn completely.

Condition	Diaphragm	VTV	Throttle Valve
Idling	Pushed in by return force of throttle valve	CLOSED	Idle speed position
Normal driving	Pushed out by diaphragm spring	OPEN	High speed position
Deceleration	*Pushed in by return force of throttle valve	CLOSED	Slightly opens and then slowly closes to idle position

*This action is delayed by the VTV.

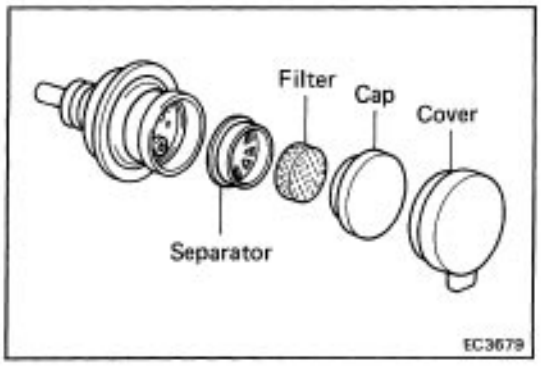

ADJUSTMENT OF DASH POT (DP) SETTING SPEED

1. WARM UP AND STOP ENGINE

Allow the engine to reach normal operating temperature.

2. CHECK IDLE SPEED AND ADJUST, IF NECESSARY

3. REMOVE COVER, CAP, FILTER AND SEPARATOR FROM DP

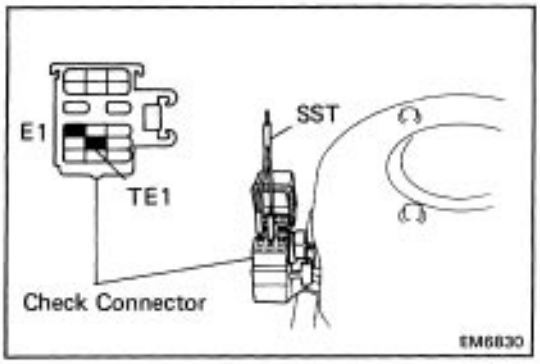

4. ADJUST DP SETTING SPEED

(a) Using SST, connect terminals TE 1 and E 1 of the check connector.
SST 09843–18020

HINT: The check connector is located near the air cleaner.

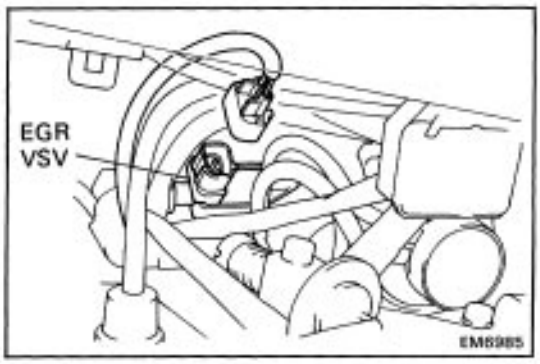

(b) (2WD California and 4WD)
Disconnect the EGR VSV connector.

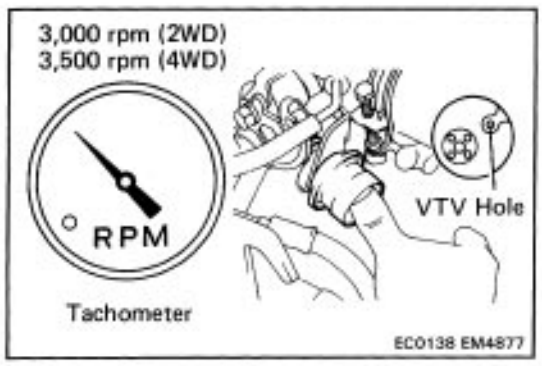

(c) Race the engine at 3,000 rpm (2WD) or 3,500 rpm (4WD) for a few seconds.

(d) Plug the VTV hole with your finger.

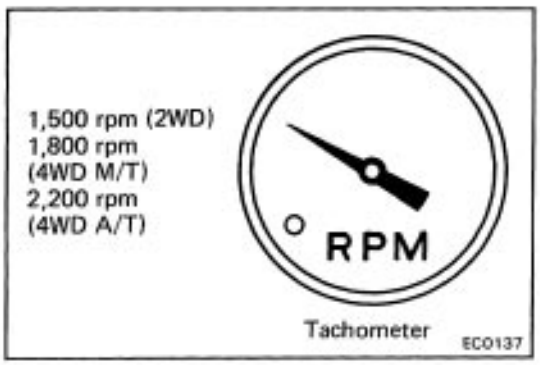

(e) Release the throttle valve.

(f) Check the DP setting speed.

DP setting speed: 2WD 1,500 rpm
4WD M/T 1,800 rpm
4WD AlT 2,200 rpm
(w/ Cooling fan OFF)

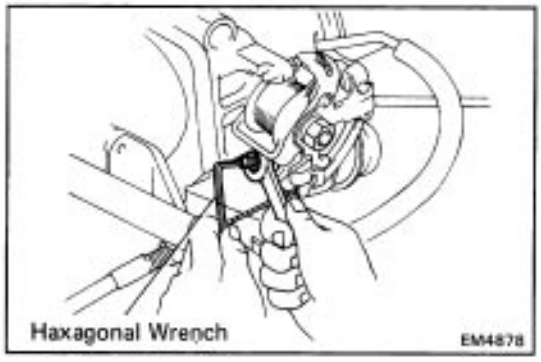

(g) Adjust the DP setting speed by turning the DP ADJUSTING SCREW.
(h) Repeat steps from (c) to (e), and recheck the DP setting speed.

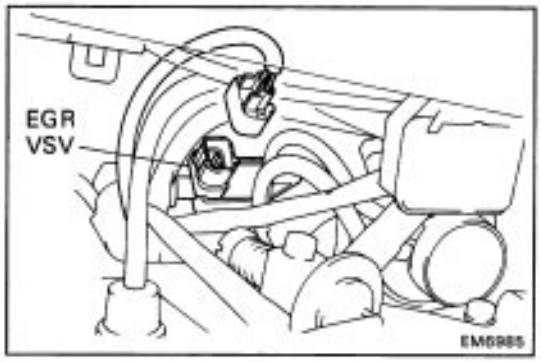

(i) (2WD California and 4WD)
Connect the EGR VSV connector.

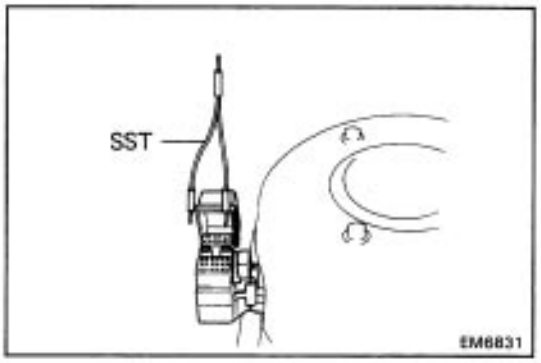

(j) Remove SST from the check connector.

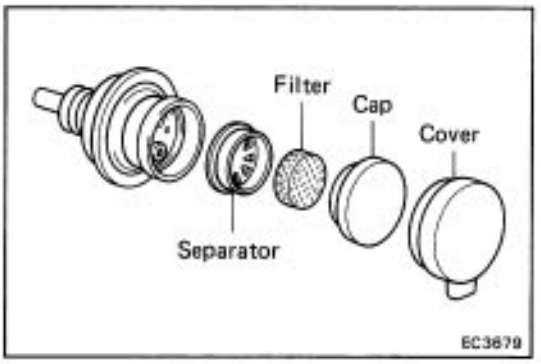

5. REINSTALL DP SEPARATOR, FILTER, CAP AND COVER
HINT: When install the cover, install it with ventilate holes below.

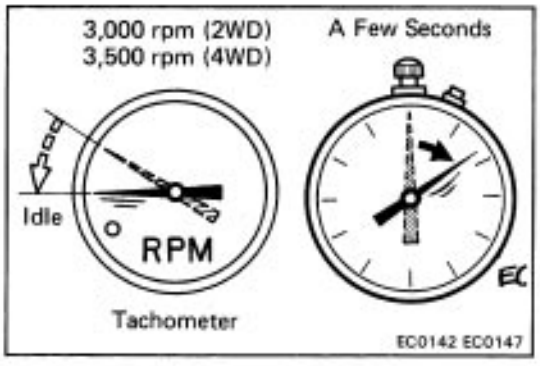

6. CHECK VTV OPERATION
Race the engine at 3,000 rpm (2WD) or 3,500 rpm (4WD) for a few seconds, release the throttle valve and check that the engine returns to idle in a few seconds.

EXHAUST GAS RECIRCULATION (EGR) SYSTEM
(2WD California and 4WD)

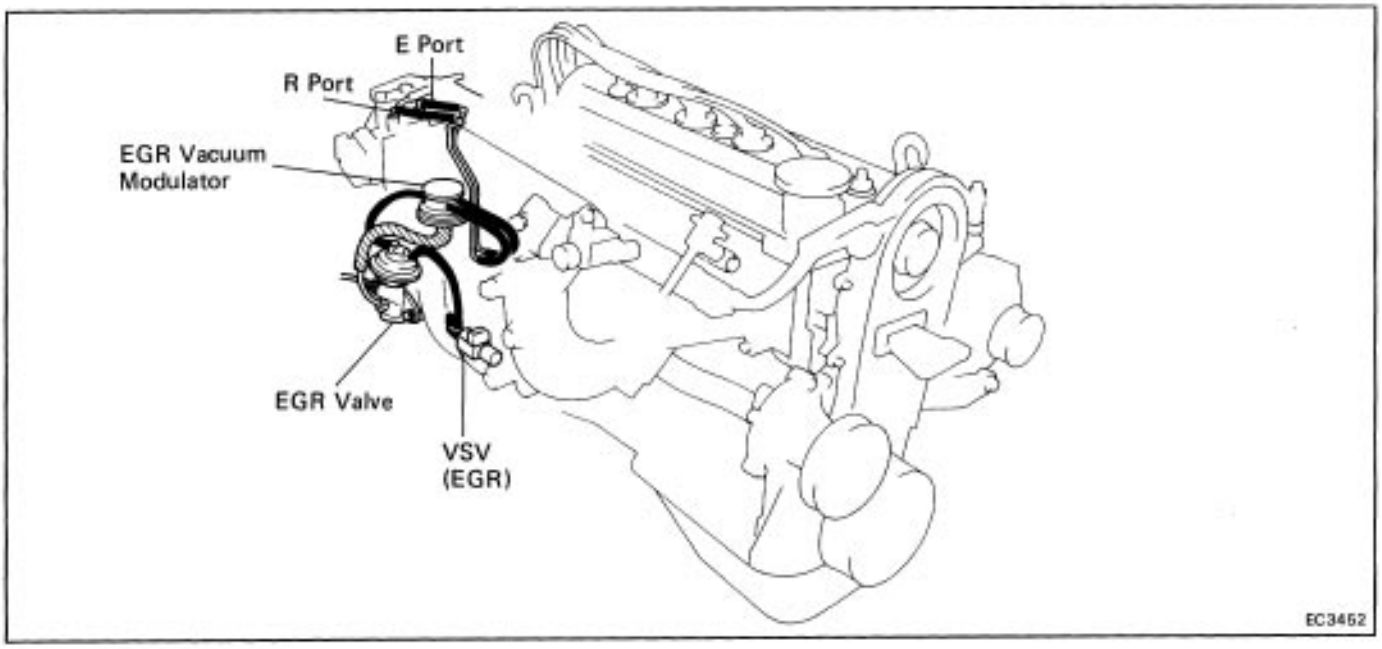

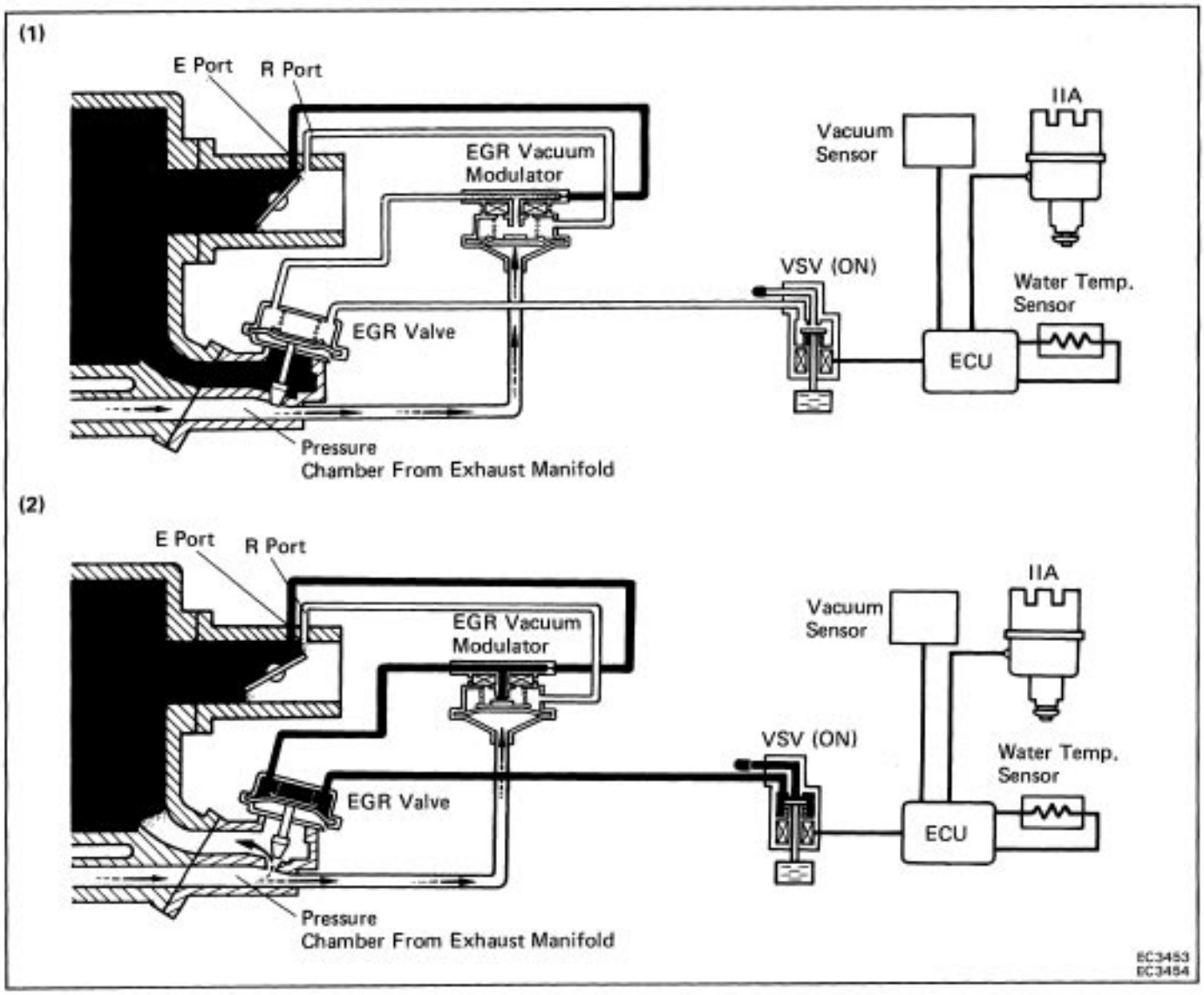

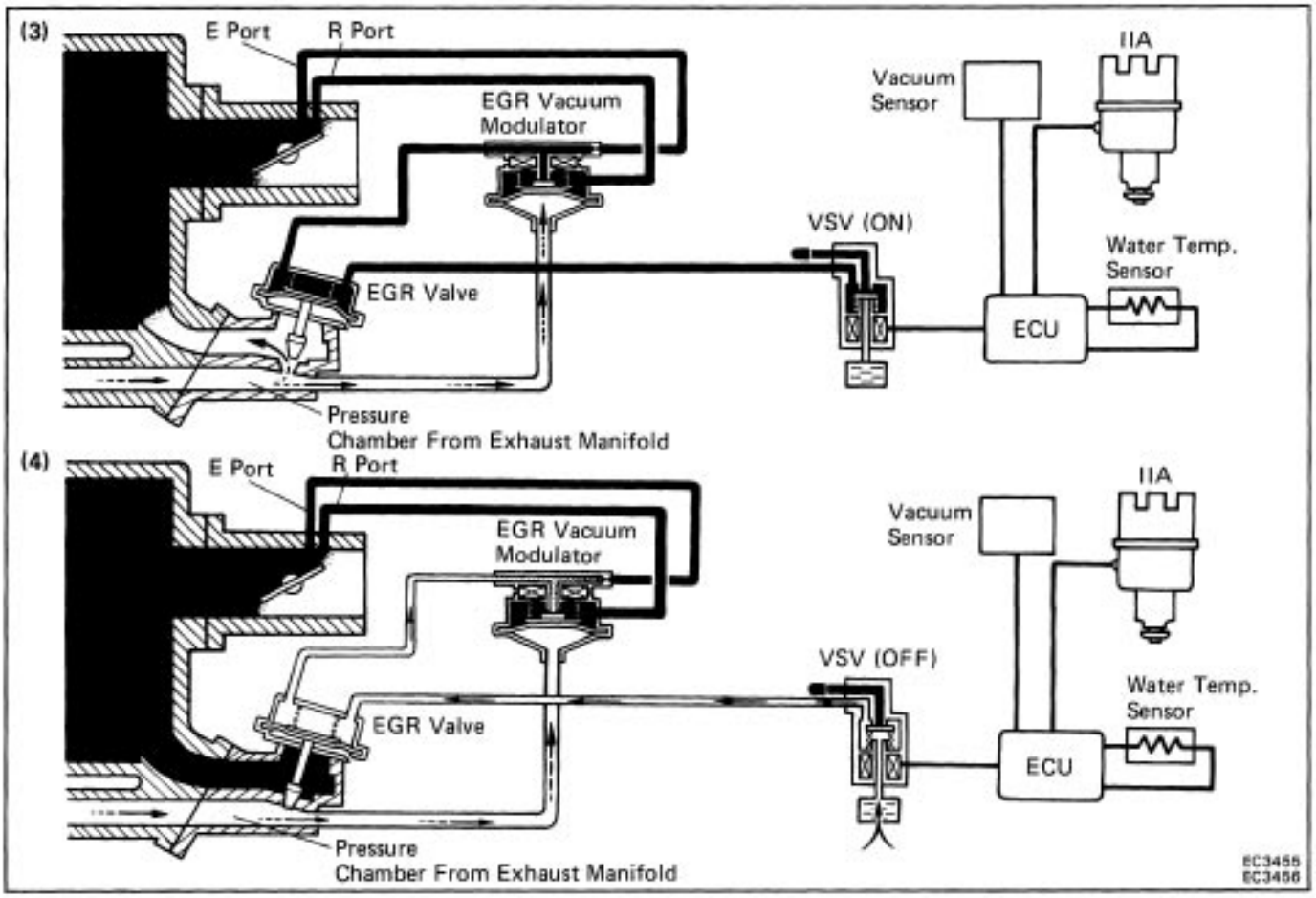

To reduce NO_x emissions, part of the exhaust gases are recirculated through the EGR valve to the intake manifold to lower the maximum combustion temperature.

Coolant Temp.	ENGINE rpm	VSV	Throttle Valve Opening Angle	Pressure in the EGR Valve Pressure Chamber		EGR Vacuum Modulator	EGR Valve	Exhaust Gas
Below 47°C (117°F)	–	OFF	–	–		–	CLOSED	Not recirculated
Above 53°C (127°F)	Below 4,000 rpm	OFF	–	–		–	CLOSED	Not recirculated
		*** ON	Positioned below E port	–		–	CLOSED	Not recirculated
			Positioned between E port and R port	(1) LOW	*Pressure constantly alternating between low and high	OPENS passage to atmosphere	CLOSED	Not recirculated
				(2) HIGH		CLOSES passage to atmosphere	OPEN	Recirculated
			Positioned above R port	(3) HIGH	**	CLOSES passage to atmosphere	OPEN	Recirculated (increase)
	Above 4,400 rpm	(4) OFF	–	–		–	CLOSED	Not recirculated

Remarks: *Pressure increase → Modulator closes → EGR valve opens → Pressure drops → EGR valve closes → Modulator opens → (Pressure increase)

**When the throttle valve is positioned above the R port, the EGR vacuum modulator will close the atmosphere passage and open the EGR valve to increase the EGR gas, even if the exhaust pressure is insufficiently low.

***VSV switched ON when product of engine rpm multiplied by vacuum sensor value exceeds a specified value.

INSPECTION OF EGR SYSTEM

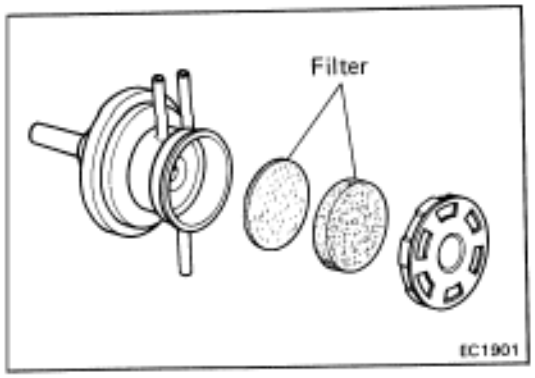

1. CHECK AND CLEAN FILTERS IN EGR VACUUM MODULATOR

(a) Check the filter for contamination or damage.

(b) Using compressed air, clean the filters.

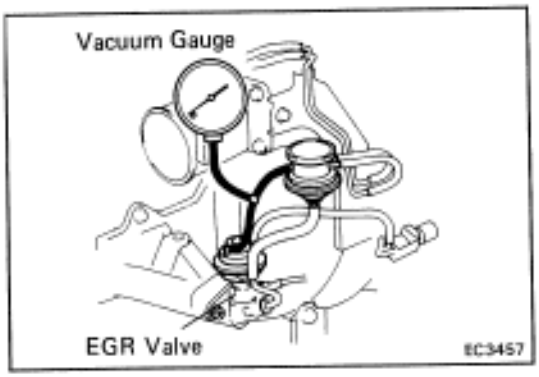

2. PREPARATION

Using a 3–way connector, connect a vacuum gauge to the hose between the EGR valve and vacuum pipe.

3. CHECK SEATING OF EGR VALVE

Start engine and check that the engine starts and runs idle.

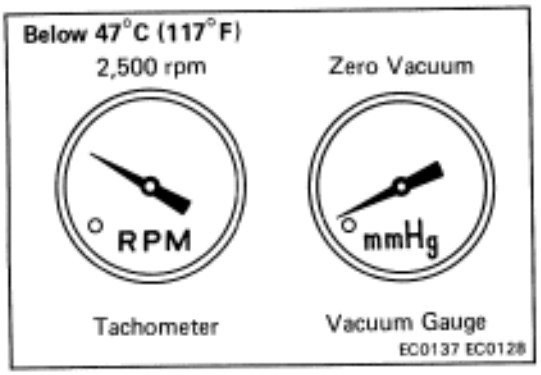

4. CHECK VSV WITH COLD ENGINE

(a) The coolant temperature should be below 47˚C (104˚F)

(b) Check that the vacuum gauge indicates zero at 2,501 rpm.

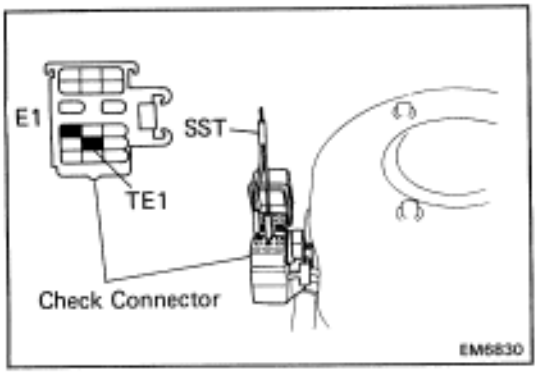

5. CHECK VSV AND EGR VACUUM MODULATOR WITH HOT ENGINE WITH TERMINALS TE1 AND E1 CONNECTED

(a) Using SST, connect terminals TE1 and E1 of the check connector.

SST 09843–18020

HINT: The check connector is located near the air cleaner

(b) Warm up the engine.

(c) Check that the vacuum gauge indicates is zero at idle

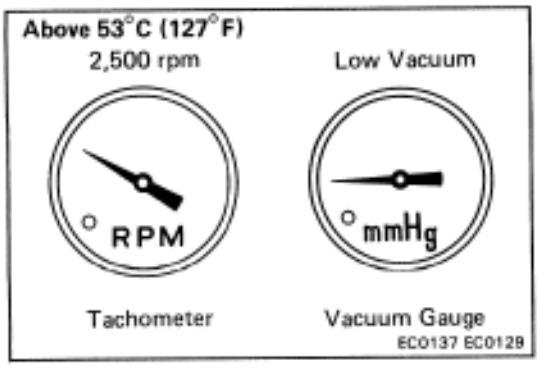

(d) Check that the vacuum gauge indicates low vacuum at 2,500 rpm.

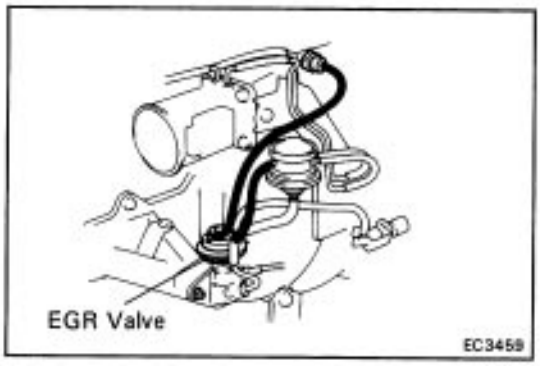

6. CHECK EGR VALVE WITH TERMINAL TE 1 AND E 1 CONNECTED

(a) Apply vacuum directly to the EGR valve with the engine idling.

(b) Check that the engine runs rough or dies.

(c) Reconnect the vacuum hoses to the proper location.

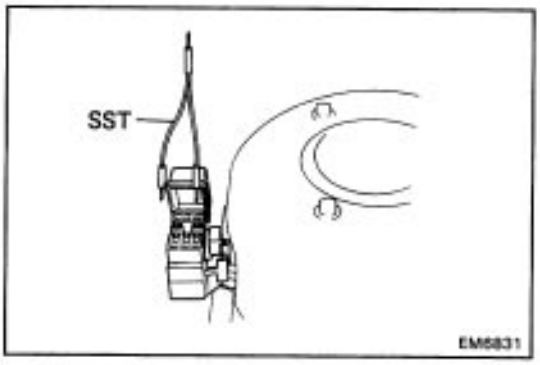

(d) Remove SST from the check connector.
SST 09843–18020

IF NO PROBLEM IS FOUND WITH THIS INSPECTION, THE SYSTEM IS OKAY; OTHERWISE INSPECT EACH PART

INSPECTION OF EGR VALVE

1. REMOVE EGR VALVE

Check the valve for sticking and heavy carbon deposits. If a problem is found, replace it.

2. REINSTALL EGR VALVE WITH NEW GASKET

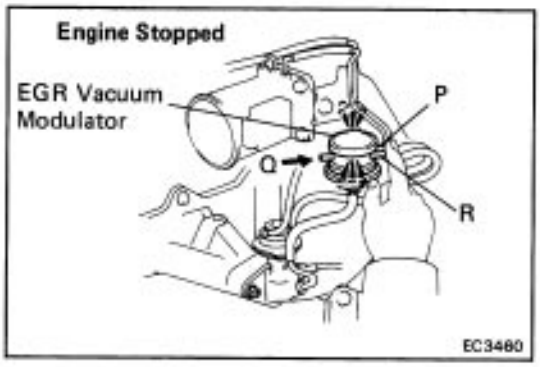

INSPECTION OF EGR VACUUM MODULATOR

CHECK EGR VACUUM MODULATOR OPERATION

(a) Disconnect the vacuum hoses from ports P, Q and R of the EGR vacuum modulator.

(b) Block ports P and R with your finger.

(e) Blow air into port Q. Check that the air passes through to the air filter side freely.

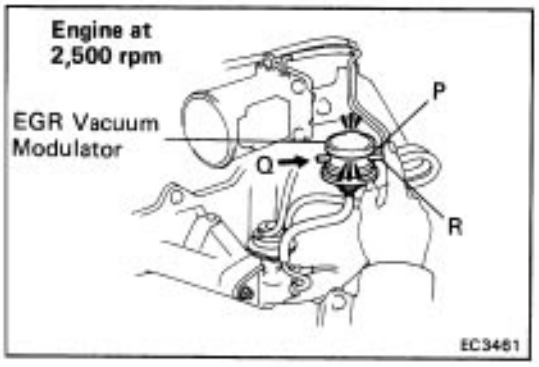

(d) Start the engine and maintain speed at 2,500 rpm.

(e) Repeat the above test. Check that there is a strong resistance to air flow.

(f) Reconnect the vacuum hoses to the proper locations.

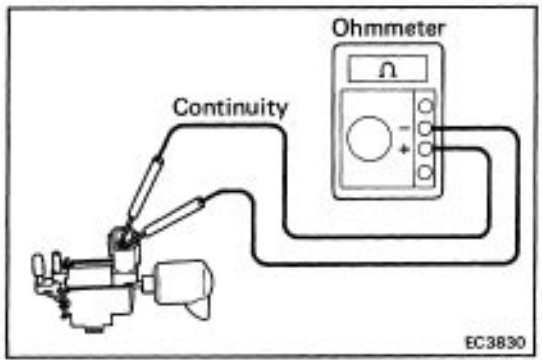

INSPECTION OF VSV

1. CHECK VSV FOR OPEN CIRCUIT

Using an ohmmeter, check that there is continuity between the terminals.

Resistance (Cold): 37 – 44Ω

If there is no continuity, replace the VSV.

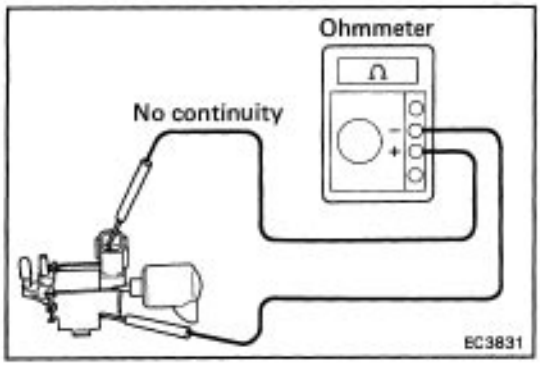

2. CHECK VSV FOR GROUND

Using an ohmmeter, check that there is no continuity between each terminal and the body.

If there is continuity, replace the VSV.

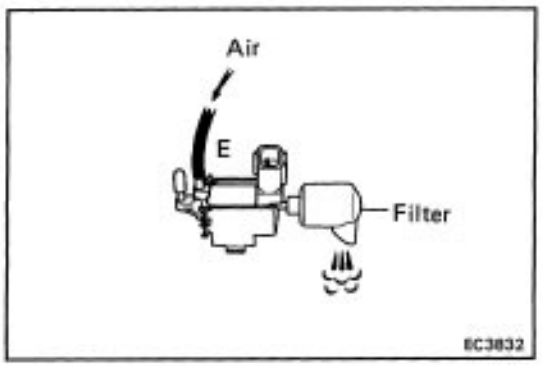

3. CHECK VSV OPERATION

(a) Check that airflows from pipe E to the filter.

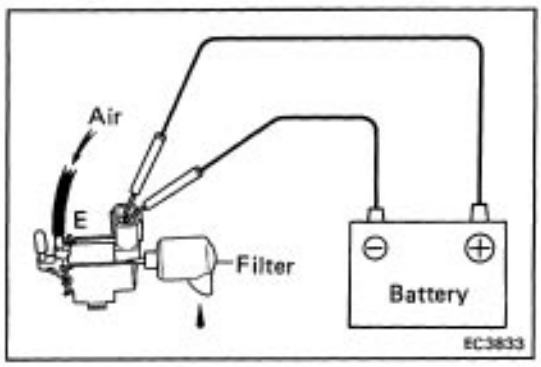

(b) Apply battery voltage across the terminals.

(c) Check that air does not flow from pipe E to the filter.

If operation is not as specified, replace the VSV.

THREE–WAY CATALYST (TWC) SYSTEM

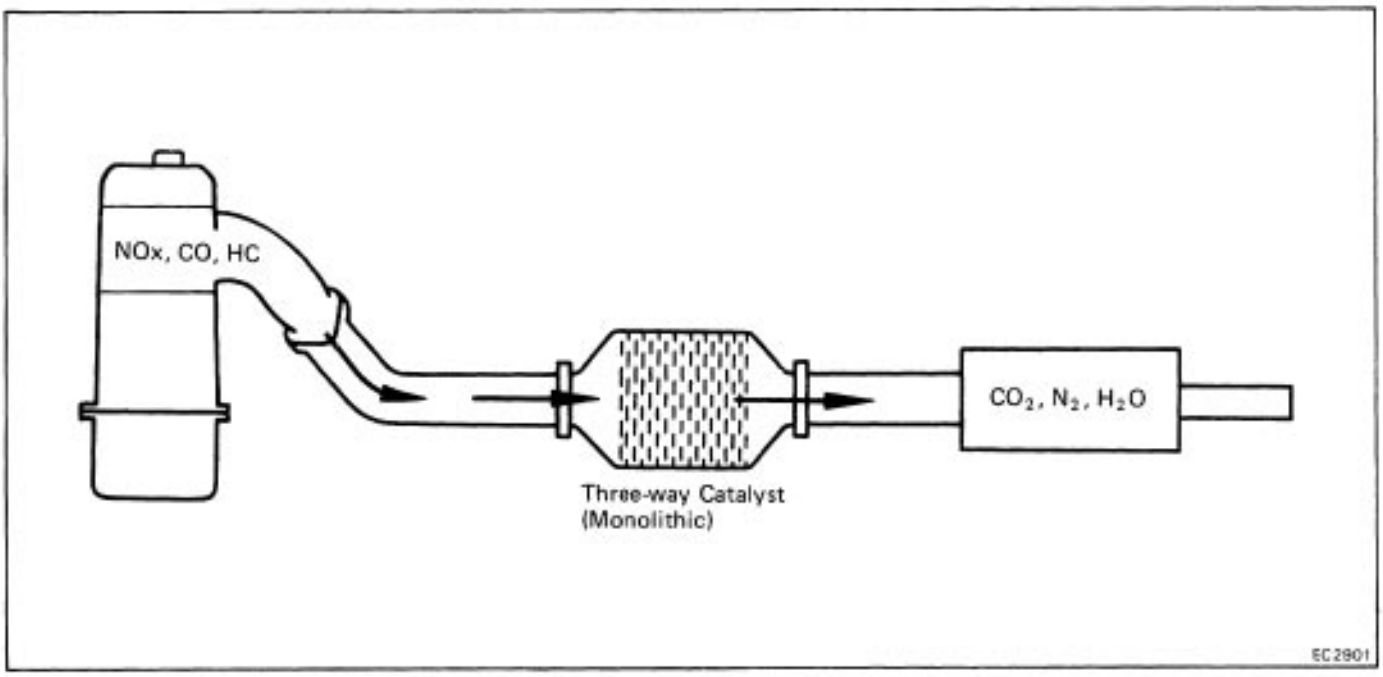

To reduce HC, CO and NOx emissions, they are oxidized, and converted to nitrogen (N2), carbon dioxide (C02) and water (H20) by the catalyst.

Exhaust Port		TWC		Exhaust Gas
HC, CO AND NOx	→	OXIDATION AND REDUCTION	→	C02 H2O N2

INSPECTION OF EXHAUST PIPE ASSEMBLY

1. CHECK CONNECTIONS FOR LOOSENESS OR DAMAGE

2. CHECK CLAMPS FOR WEAKNESS, CRACKS OR DAMAGE

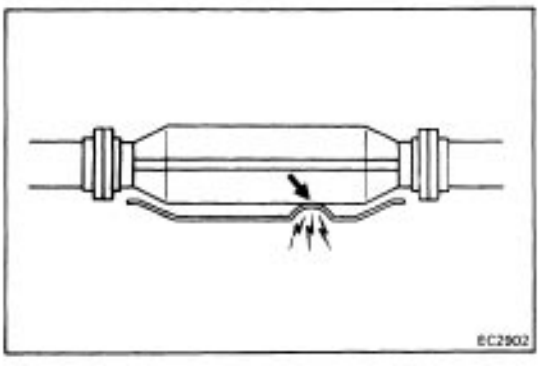

INSPECTION OF CATALYTIC CONVERTER

CHECK FOR DENTS OR DAMAGE

If any part of the protector is damaged or dented to the extent that is contacts the catalyst, repair or replace it.

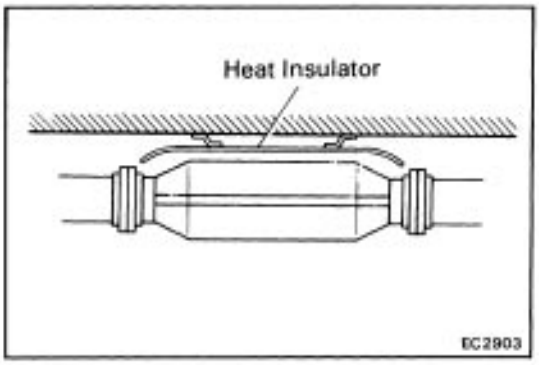

INSPECTION OF HEAT INSULATOR

7. CHECK HEAT INSULATOR FOR DAMAGE

2. CHECK FOR ADEQUATE CLEARANCE BETWEEN CATALYTIC CONVERTER AND HEAT INSULATOR

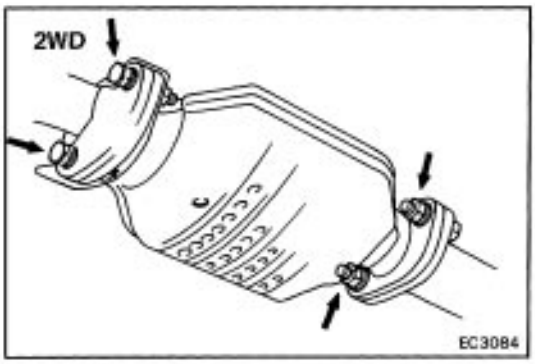

REPLACEMENT OF CATALYTIC CONVERTER

1. REMOVE CONVERTER

(a) Jack up and vehicle.

(b) Check that the converter is cool.

(c) (4WD)

Remove the bolts at the protector No. 1.

(d) Remove the bolts at the front and rear of the converter.

(e) Remove the converter and gaskets.

2. INSTALL CONVERTER

!a) Place new gaskets on the converter front and rear pipes, and connect the converter to the exhaust pipes.

(b) Tighten the bolts.

(e) (4WD)

Install the protector No. 1.

Torque: Catalyst–Exhaust pipe
440 kg–cm (32 ft–lb, 43 N–m)
Catalyst–Protector No. 1
110 kg–cm (8 ft–lb, 11 N–m)

4A–GE ENGINE

SYSTEM PURPOSE

System	Abbreviation	Purpose
Positive crankcase ventilation	PCV	Reduces blow–by gas (HC)
Fuel evaporative emission control	EVAP	Reduces evaporative HC
Dash pot	DP	Reduces HC and CO
Exhaust gas recirculation	EG R	Reduces NOx
Three–way catalyst	TWC	Reduces HC, CO and NOx
Electronic fuel injection*	EFI	Regulates all engine conditions for reduction of exhaust emissions.

*For inspection and repair of the EFI system, refer to EFI section.

COMPONENT LAYOUT AND SCHEMATIC DRAWING

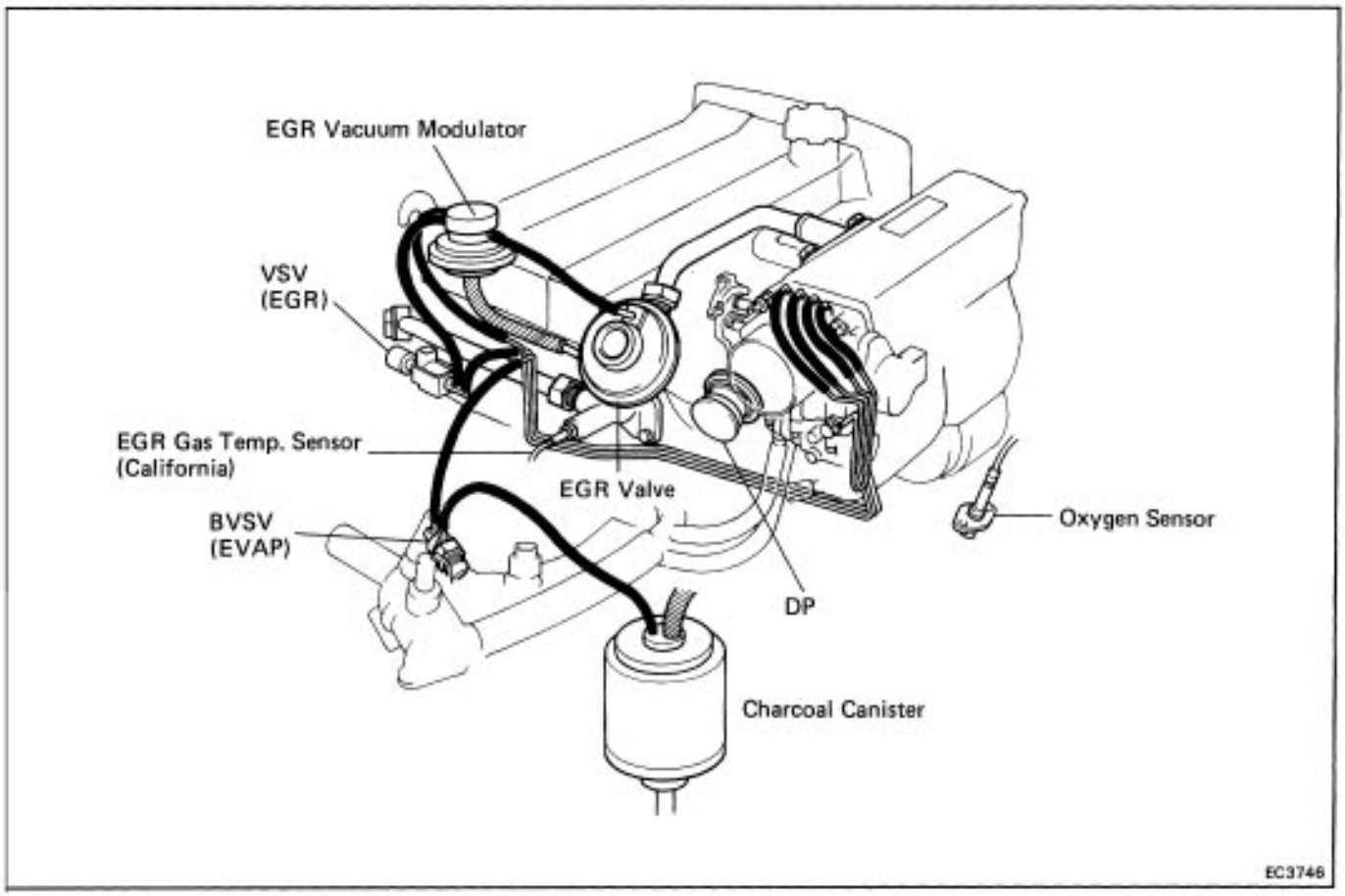

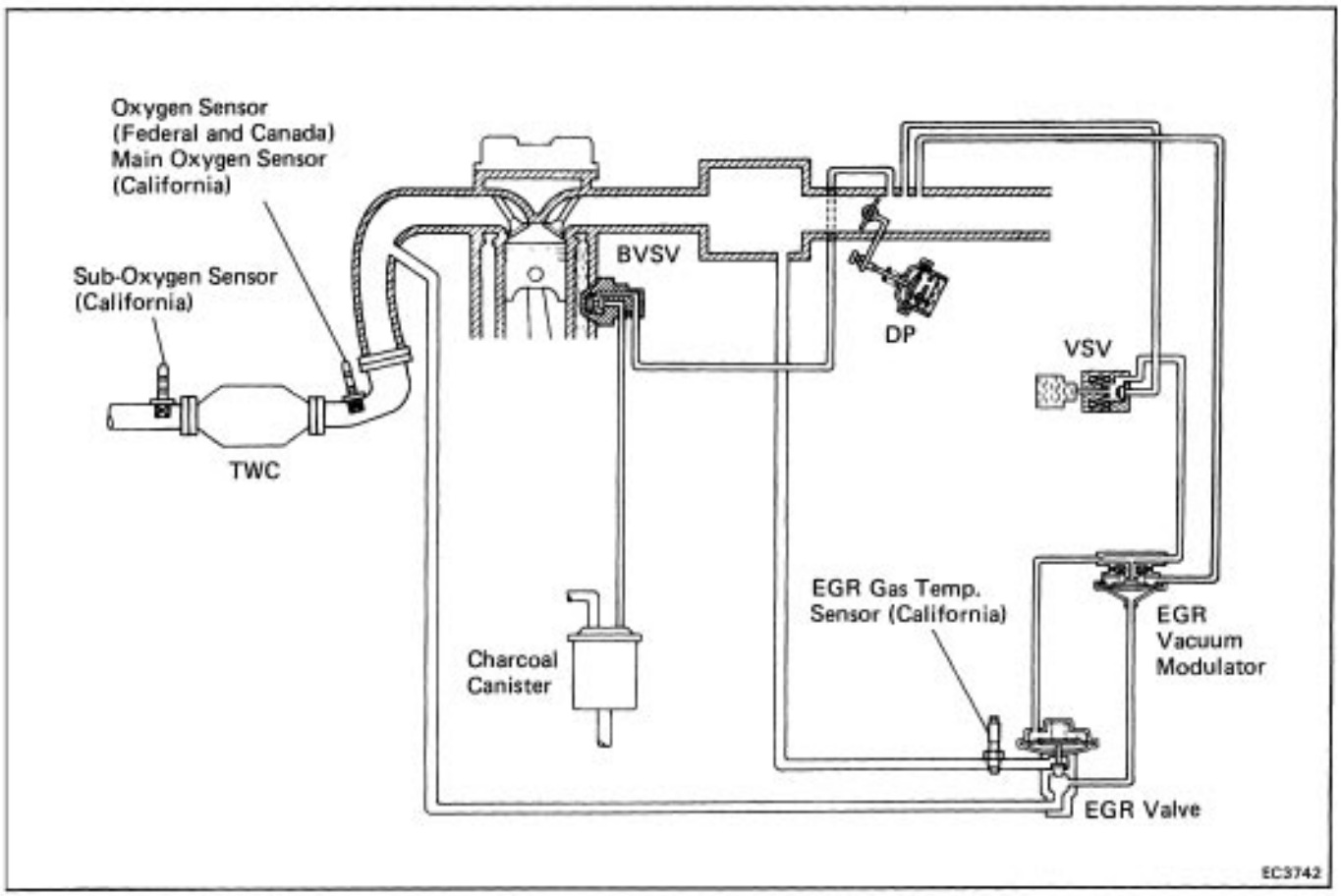

POSITIVE CRANKCASE VENTILATION (PCV) SYSTEM

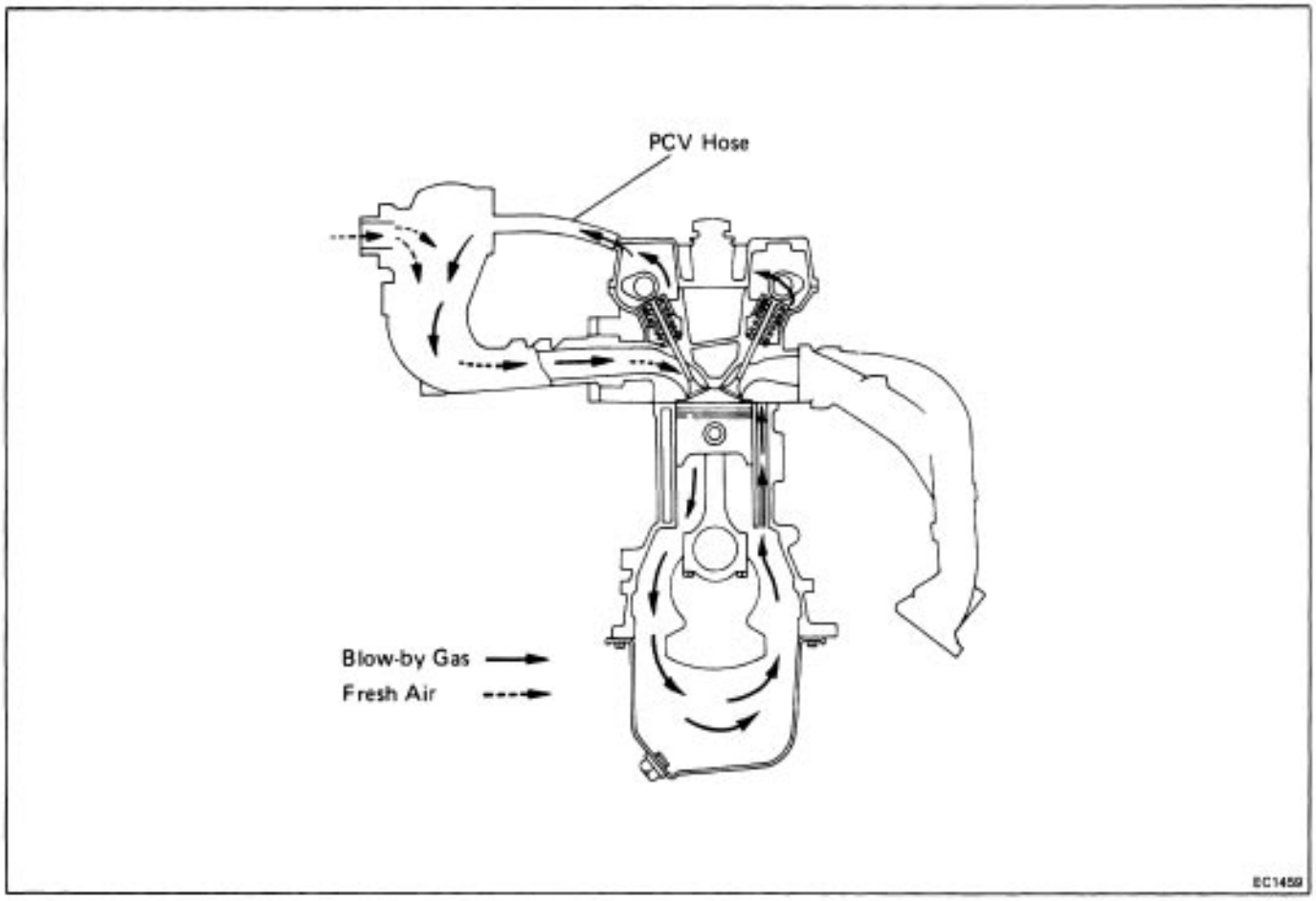

To reduce HC emissions crankcase blow–by gas (HC) is routed to the intake manifold for combustion in the cylinders.

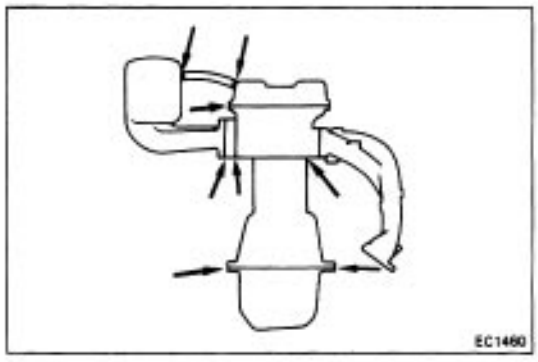

INSPECTION OF PCV HOSES AND CONNECTIONS

VISUALLY INSPECT HOSES, CONNECTIONS AND GASKETS

Check for cracks, leaks or damage.

FUEL EVAPORATIVE EMISSION CONTROL (EVAP) SYSTEM

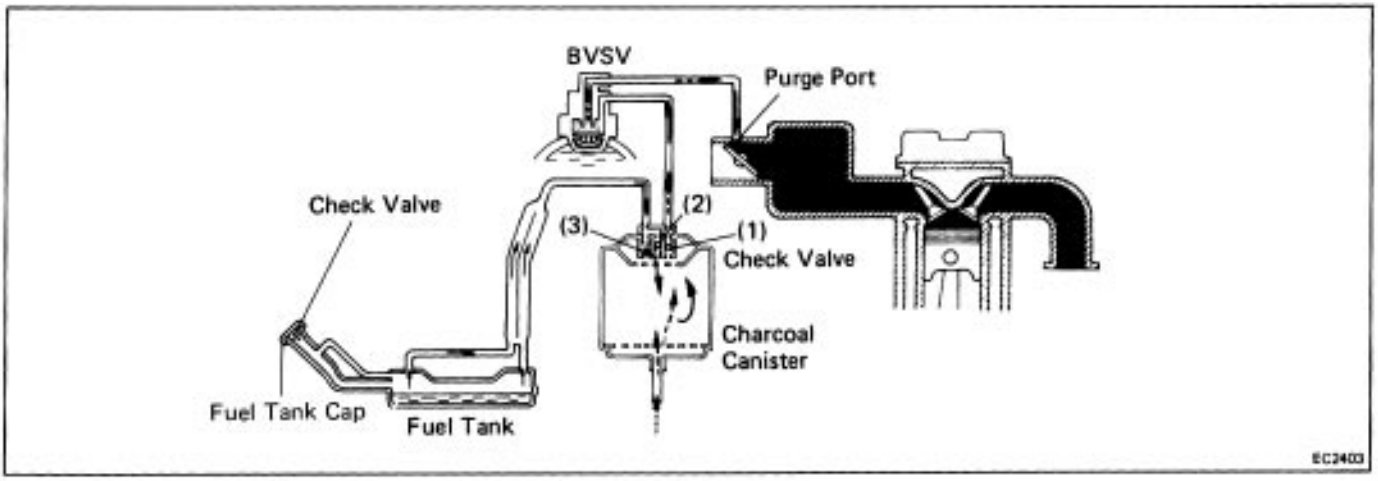

To reduce HC emissions, evaporated fuel from the fuel tank is routed through the charcoal canister to the intake manifold for combustion in the cylinders.

Coolant Temp.	BVSV	Throttle Valve Opening	Canister Check Valve			Check Valve in Cap	Evaporated Fuel (HC)
			(1)	(2)	(3)		
Below 35°C(95°F)	CLOSED	—	—	—	—	—	HC from tank is absorbed into the canister.
Above 54°C(129°F)	OPEN	Positioned below purge port	CLOSED	—	—	—	
		Positioned above purge port	OPEN	—	—	—	HC from canister is led into air intake –manifold.
High pressure in tank	—	—	—	OPEN	CLOSED	CLOSED	HC from tank is absorbed into the canister.
High vacuum in tank	—	—	—	CLOSED	OPEN	OPEN	Air is led into the fuel tank.

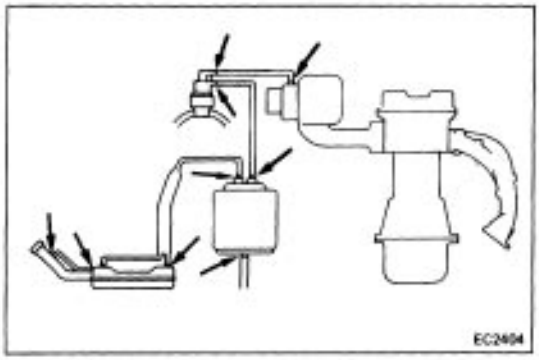

INSPECTION OF FUEL VAPOR LINES, FUEL TANK AND TANK CAP

1. VISUALLY INSPECT LINES AND CONNECTIONS

Look for loose connections, kinks or damage.

2. VISUALLY INSPECT FUEL TANK

Look for deformation, cracks or fuel leakage.

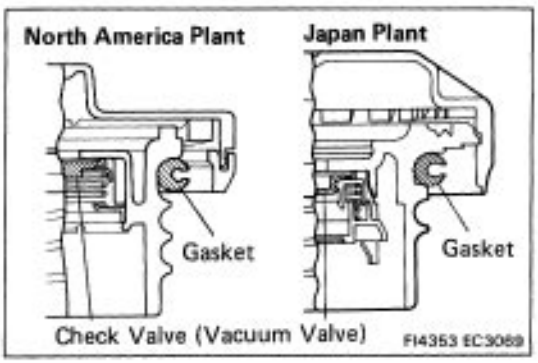

3. VISUALLY INSPECT FUEL TANK CAP

Look for a damaged or deformed gasket and cap.
If necessary, repair or replace the cap.

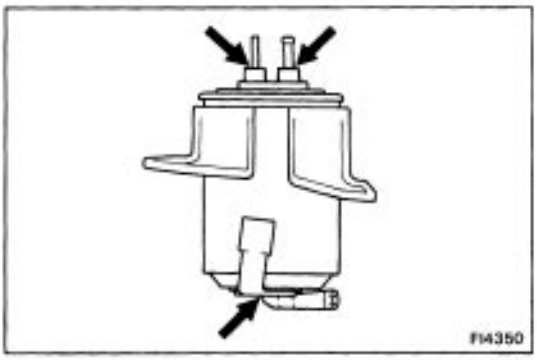

INSPECTION OF CHARCOAL CANISTER

1. REMOVE CHARCOAL CANISTER

2. VISUALLY INSPECT CHARCOAL CANISTER CASE

Look for cracks or damage.

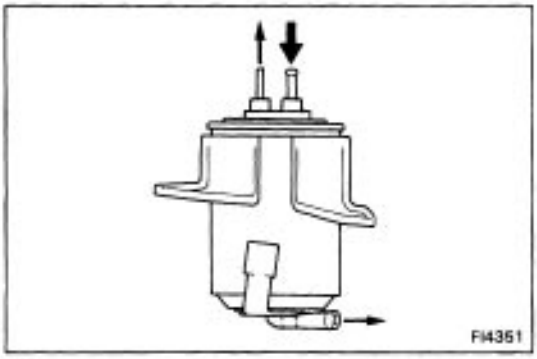

3. CHECK FOR CLOGGED FILTER AND STUCK CHECK VALVE

(a) Using low pressure compressed air, blow into the tank pipe and check that air flows without resistance from the other pipes.

(b) Blow into the purge pipe and check that air does not flow from the other pipes.

If a problem is found, replace the charcoal canister.

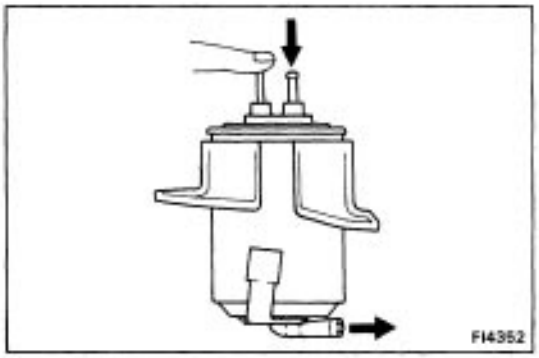

4. CLEAN FILTER IN CANISTER

Clean the filter by blowing 3 kg/cm2 (43 psi, 294 kPa) of air into the tank pipe while holding the other upper canister pipe closed.

HINT:

- Do not attempt to wash the canister.
- No activated carbon should come out.

5. INSTALL CHARCOAL CANISTER

INSPECTION OF BVSV

CHECK BVSV BY BLOWING AIR INTO PIPE

(a) Drain the coolant from the radiator into a suitable container.

(b) Remove the BVSV.

(c) Cool the BVSV to below 35˚C (95˚F) with cool water.

(d) Blow air into a pipe and check that the BVSV is closed.

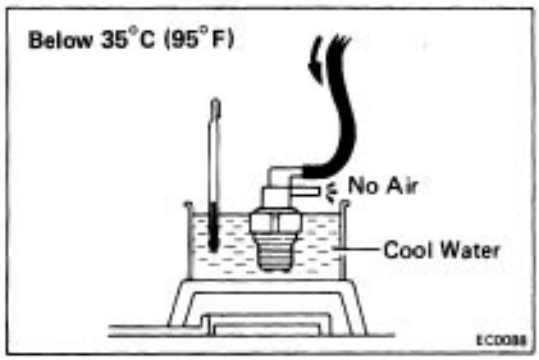

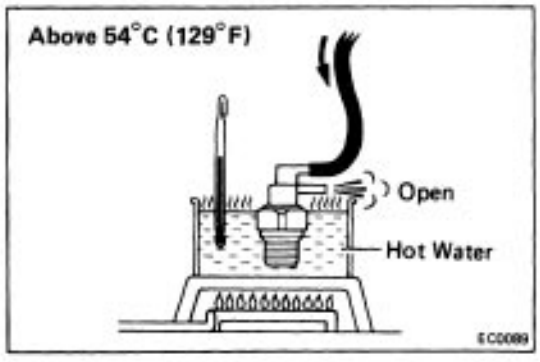

(e) Heat the BVSV to above 54˚C (129˚F) with hot water.

(f) Blow air into a pipe and check that the BVSV is open.

(g) Apply liquid sealer to the threads of the BVSV and reinstall.

(h) Fill the radiator with coolant.

If a problem is found, replace the BVSV.

DASH POT (DP) SYSTEM

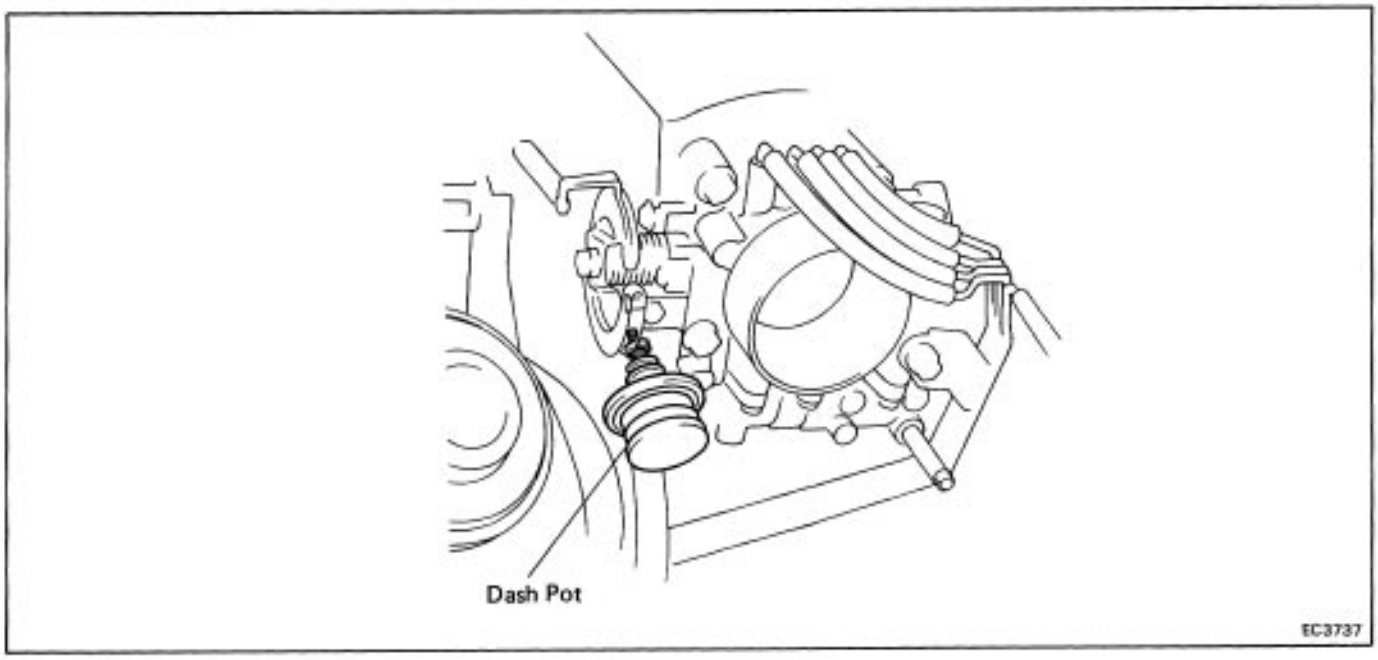

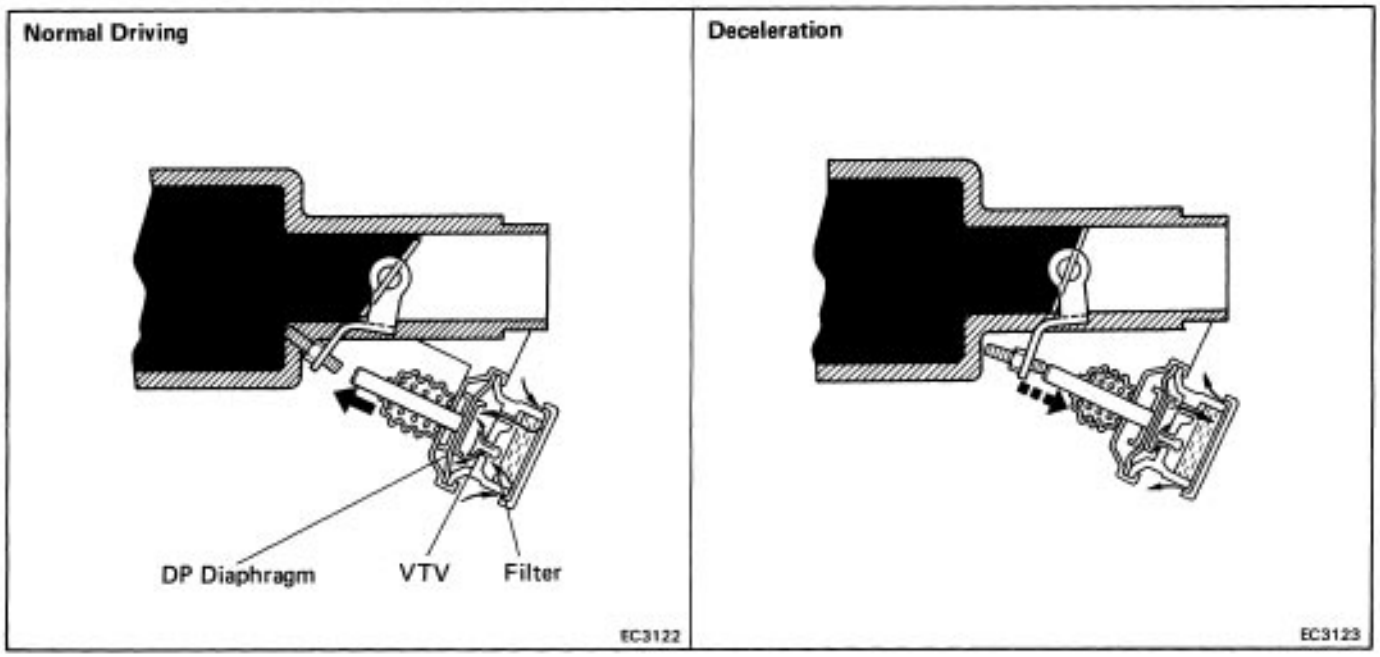

To reduce HC and CO emissions, when decelerating the dash pot opens the throttle valve slightly more than at idle. This causes the air–fuel mixture to burn completely.

Condition	DP Diaphragm	Check Valve in VTV	Throttle Valve
Idling	Pushed in by return force of throttle valve	CLOSED	Idle speed position
Normal driving	Pushed out by diaphragm spring	OPEN	Medium or high speed position
Deceleration	*Pushed in by return force of throttle valve	CLOSED	Slightly opens and then slowly closes to idle position

*This action is delayed by the VTV.

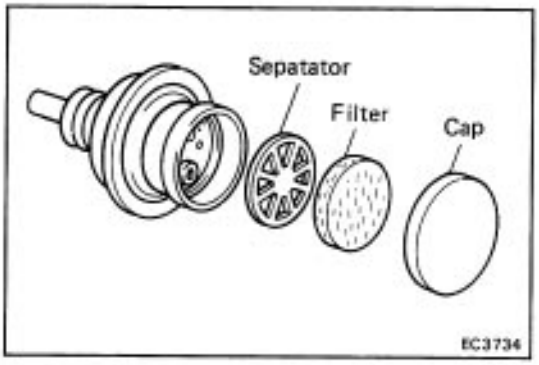

ADJUSTMENT OF DASH POT (DP1 SETTING SPEED

1. WARM UP AND STOP ENGINE

Allow the engine to reach normal operating temperature.

2. CHECK IDLE SPEED

3. REMOVE CAP, FILTER AND SEPARATOR FROM DP

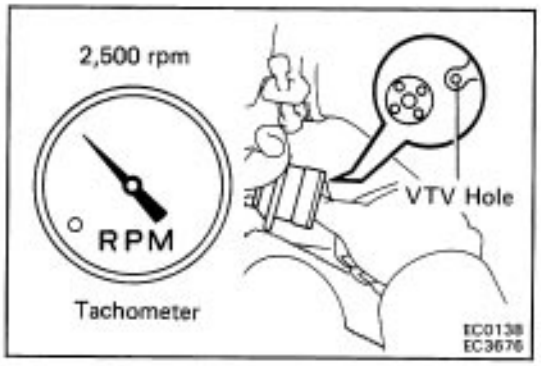

4. ADJUST DP SETTING SPEED

(a) Race the engine at 2, 500 rpm for a few seconds.

(b) Plug the VTV hole with your finger–.

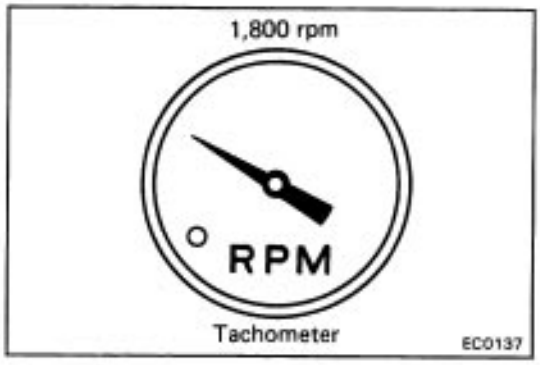

(c) Release the throttle valve.

(d) Check the DP setting speed.

DP setting speed: 1,800 rpm
(w/ Cooling fan OFF)

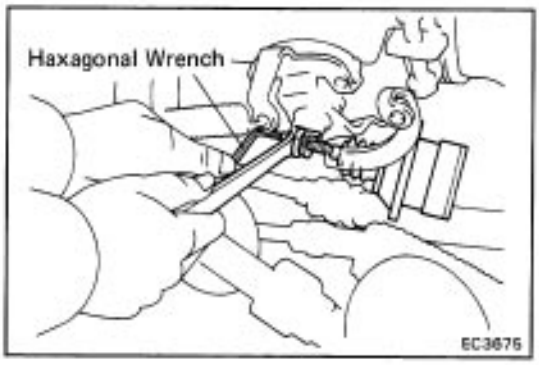

(e) Adjust the DP setting speed by turning the DP ADJUSTING SCREW.

(f) Repeat steps from (a) to (c), and recheck the DP setting speed.

5. REINSTALL DP SEPARATOR, FILTER AND CAP

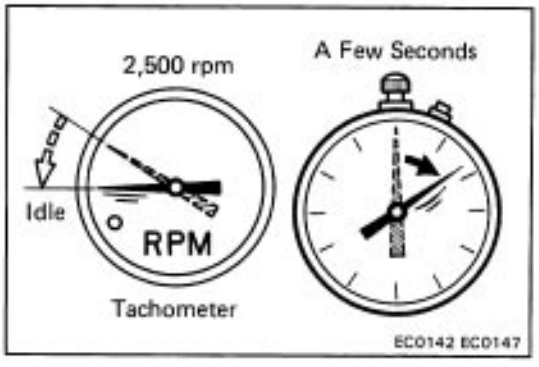

6. CHECK VTV OPERATION

Race the engine at 2, 500 rpm for a few seconds, release the throttle valve and check that the engine returns to idle in a few seconds.

EXHAUST GAS RECIRCULATION (EGR) SYSTEM

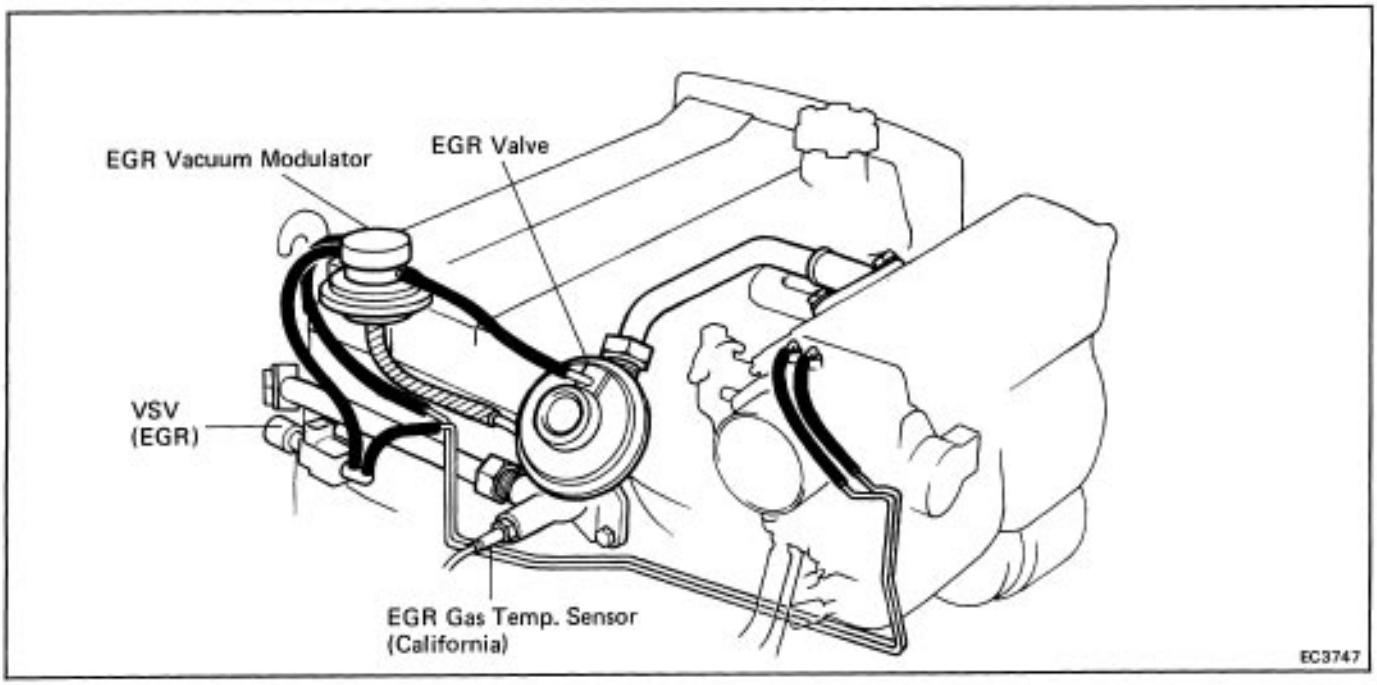

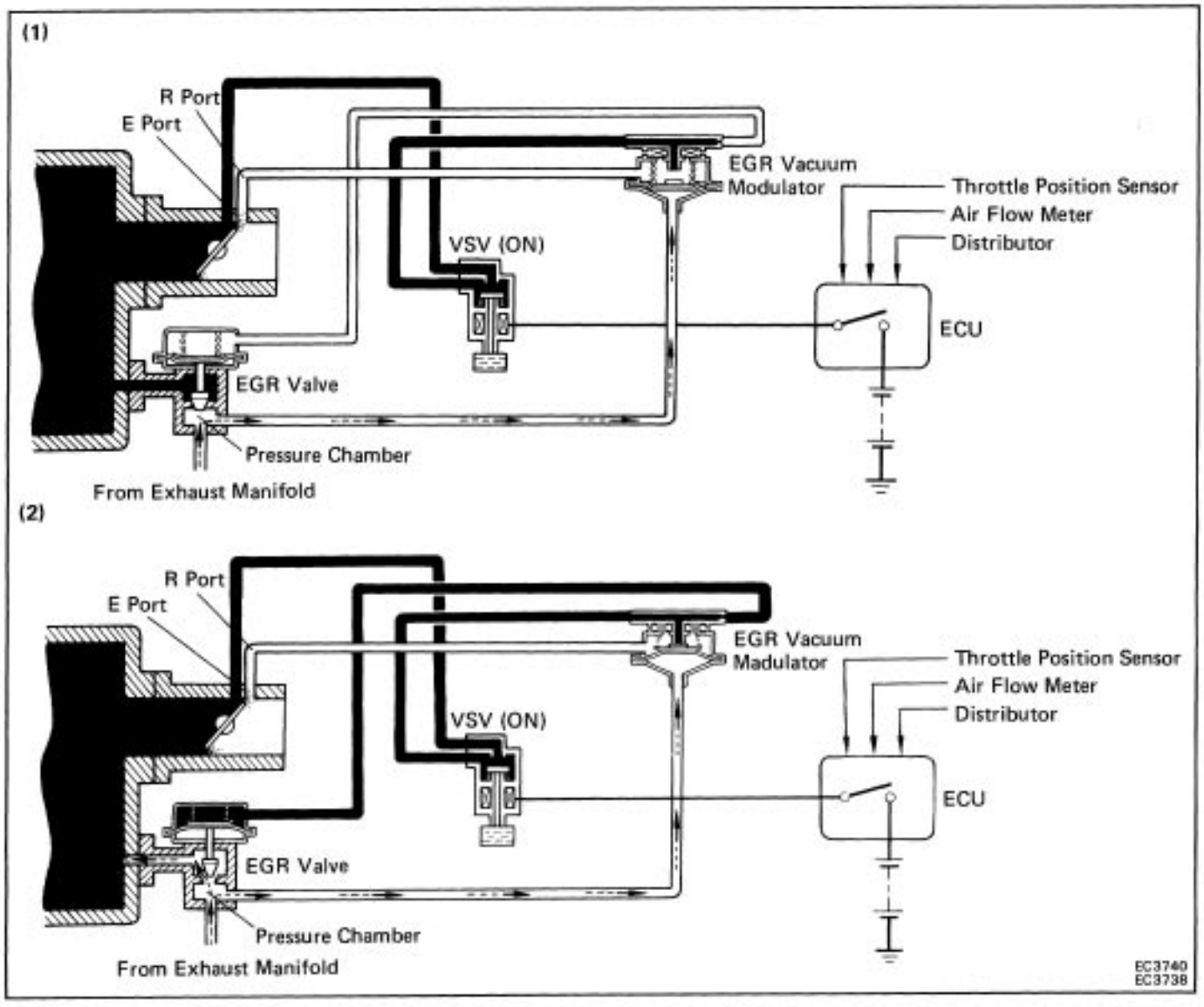

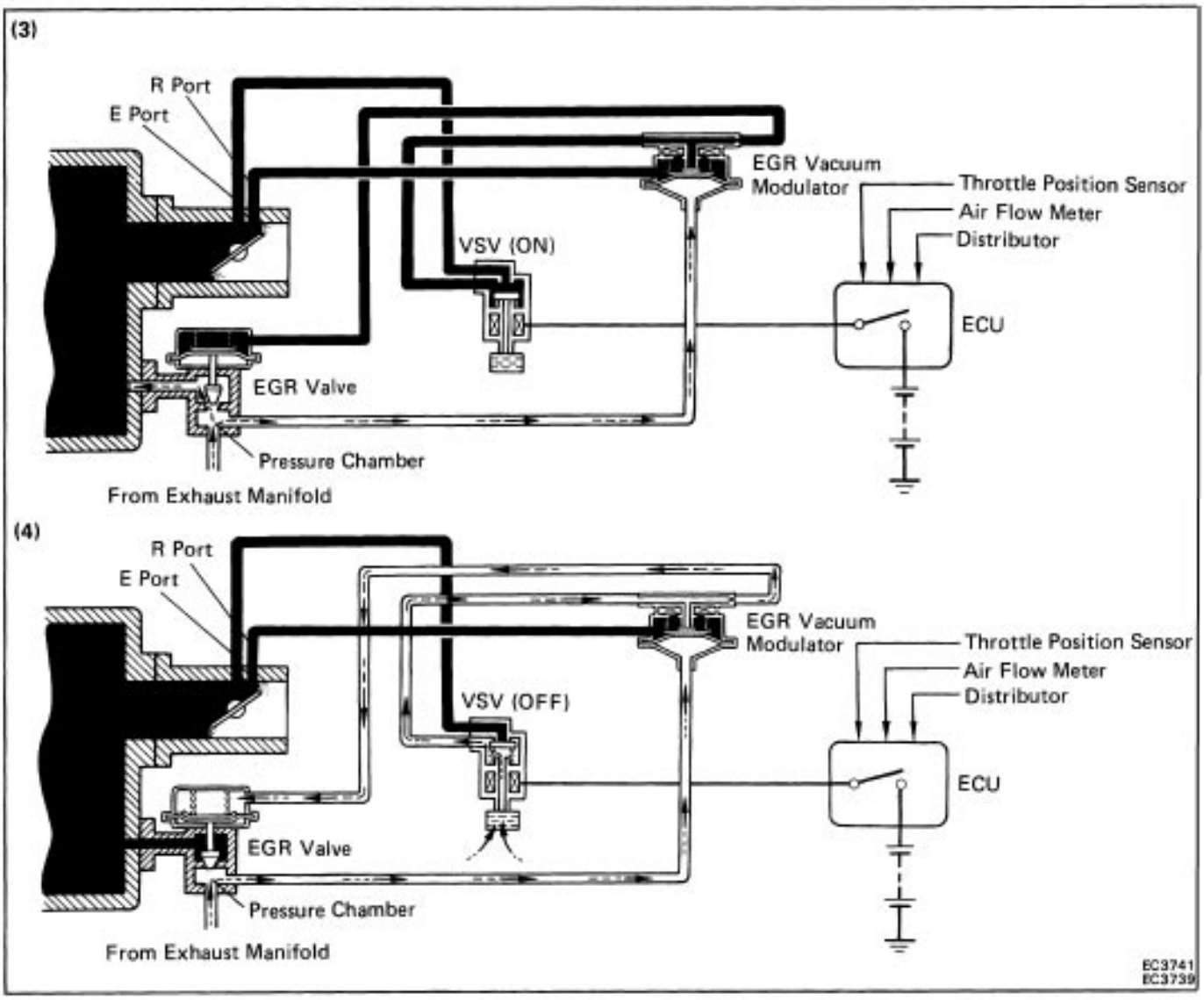

To reduce NOx emissions, part of the exhaust gases are recirculated through the EGR valve to the intake manifold to lower the maximum combustion temperature.

Coolant Temp.	ENGINE rpm	VSV	Throttle Valve Opening Angle	Pressure in the EGR Valve Pressure Chamber		EGR Vacuum Modulator	EGR Valve	Exhaust Gas
Below 54°C (129°F)	–	OFF	–	–		–	CLOSED	Not recirculated
Above 60°C (140°F)	Below 3,800 rpm	ON	Positioned below E port	–		–	CLOSED	Not recirculated
			Positioned between E port and R port	(1) LOW	*Pressure constantly alternating between low and high	OPENS passage to atmosphere	CLOSED	Not recirculated
				(2) HIGH		CLOSES passage to atmosphere	OPEN	Recirculated
			Positioned above R port	(3) HIGH	**	CLOSES passage to atmosphere	OPEN	Recirculated (increase)
	Above 4,200 rpm	(4) OFF	–	–		–	CLOSED	Not recirculated

Remarks: *Pressure increase → Modulator closes → EGR valve opens → Pressure drops → EGR valve closes → Modulator opens → Pressure increase

**When the throttle valve is positioned above the R port, the EGR vacuum modulator will close the atmosphere passage and open the EGR valve to increase the EGR gas, even if the exhaust pressure is insufficiently low.

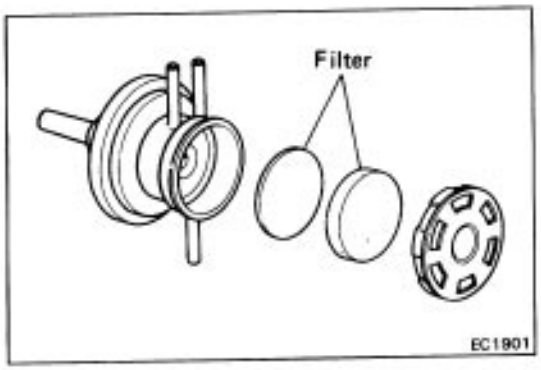

INSPECTION OF EGR SYSTEM

1. CHECK AND CLEAN FILTERS IN EGR VACUUM MODULATOR

(a) Check the filter for contamination or damage.

(b) Using compressed air, clean the filters.

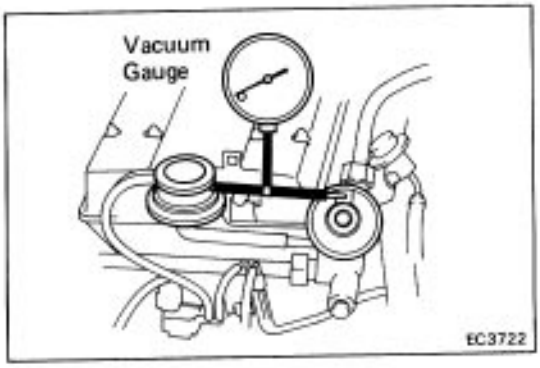

2. PREPARATION

Using a 3–way connector, connect a vacuum gauge to the hose between the EGR valve and EGR vacuum modulator.

3. CHECK SEATING OF EGR VALVE

Start the engine and check that the engine starts and runs at idle.

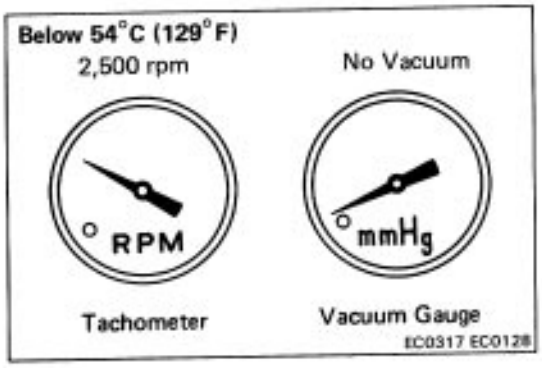

4. CHECK VSV WITH COLD ENGINE

(a) The coolant temperature should be below 54°C (129 °F).

(b) Check that the vacuum gauge indication is zero at 2,500 rpm.

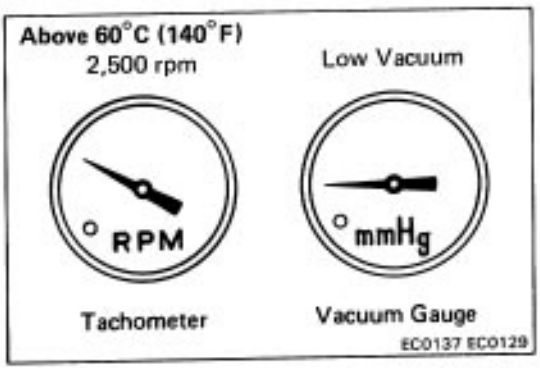

5. CHECK VSV AND EGR VACUUM MODULATOR WITH HOT ENGINE

(a) Warm up the engine.

(b) Check that the vacuum gauge. indicates low vacuum at 2,500 rpm.

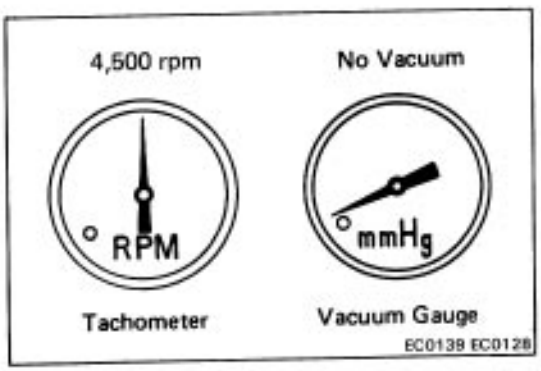

(c) Check that the vacuum gauge indication is zero at 4,500 rpm.

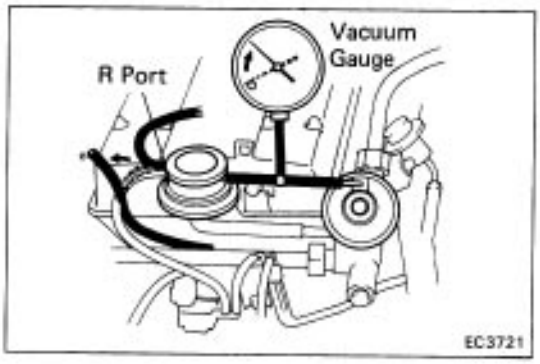

(d) Disconnect the vacuum hose from R port of the EGR vacuum modulator and connect R port directly to the intake manifold with another hose.
(e) Check that the vacuum gauge indicates high vacuum at 2,500 rpm.
HINT: As a large amount of EGR gas enters, the engine will misfire slightly.
(f) Disconnect the vacuum gauge and reconnect the vacuum hoses to the proper locations.

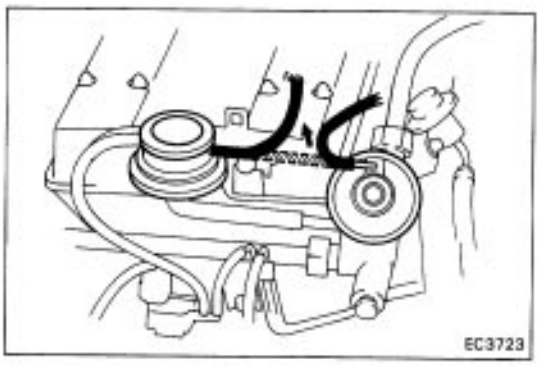

6. CHECK EGR VALVE
(a) Apply vacuum directly to the EGR valve with the engine idling.
(b) Check that the engine runs rough or dies.
(c) Reconnect the vacuum hoses to the proper location.
IF NO PROBLEM IS FOUND WITH THIS INSPECTION, SYSTEM IS FUNCTIONING; OTHERWISE INSPECT EACH PART

INSPECTION OF EGR VALVE

1 . REMOVE EGR VALVE
Check the valve for sticking and heavy carbon deposits. If a problem is found, replace it.
2. REINSTALL EGR VALVE WITH A NEW GASKET

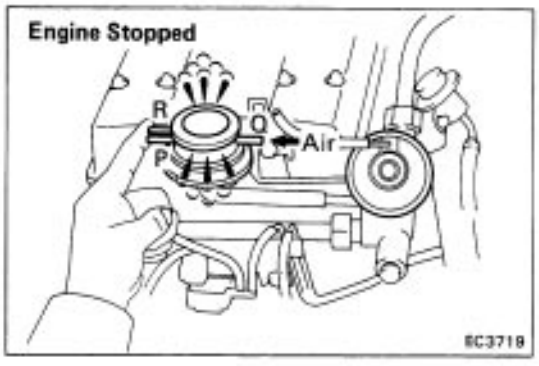

INSPECTION OF EGR VACUUM MODULATOR

CHECK EGR VACUUM MODULATOR OPERATION
(a) Disconnect the vacuum hoses from ports P, Q and R of the EGR vacuum modulator.
(b) Block ports P and R with your finger.
(c) Blow air into port Q. Check that the air passes through to the air filter side freely.

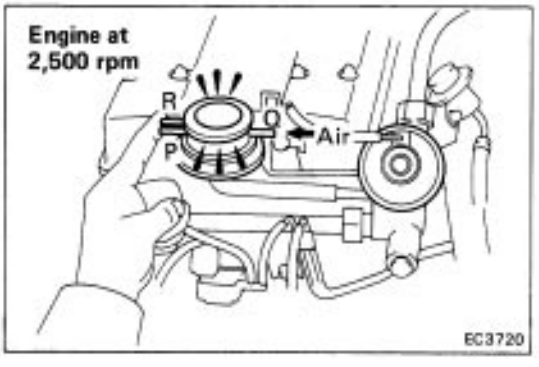

(d) Start the engine and maintain an engine speed of 2,500 rpm.
(e) Repeat the above test. Check that there is a strong resistance to air flow.
(f) Reconnect the vacuum hoses at the proper locations.

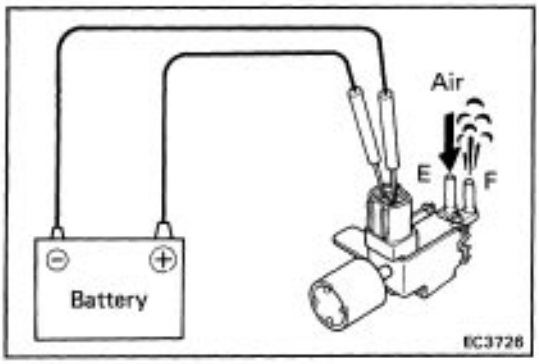

INSPECTION OF VSV

1. CHECK VACUUM CIRCUIT CONTINUITY IN VSV BY BLOWING AIR INTO PIPE

(a) Connect the VSV terminals to the battery terminals as illustrated.

(b) Blow into pipe E and check that air comes out of pipe F.

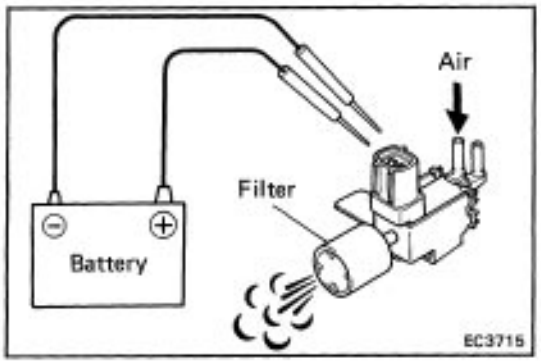

(c) Disconnect the battery.

(d) Blow air into pipe E and check that air comes out of air filter.

If a problem is found, repair or replace the VSV.

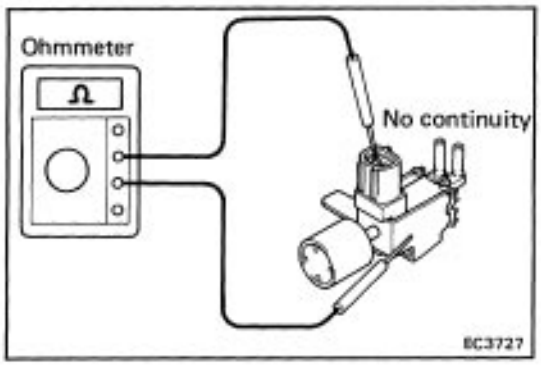

2. CHECK FOR SHORT CIRCUIT

Using an ohmmeter, check that there is no continuity between the terminal and the VSV body.

If there is continuity, replace the VSV.

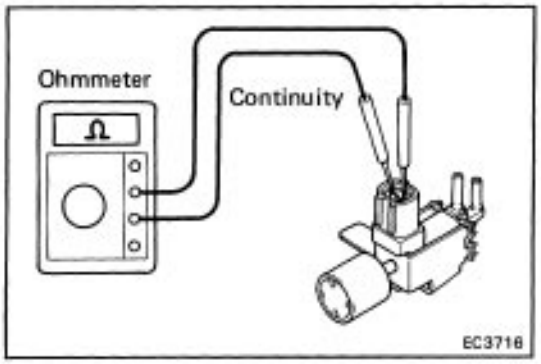

3. CHECK FOR OPEN CIRCUIT

Using an ohmmeter, measure the resistance between the terminals as shown.

Specified resistance: 33 – 39 Ω at 20˚C (68˚F)

If resistance is not within specification, replace the VSV.

THREE–WAY CATALYST (TWC) SYSTEM

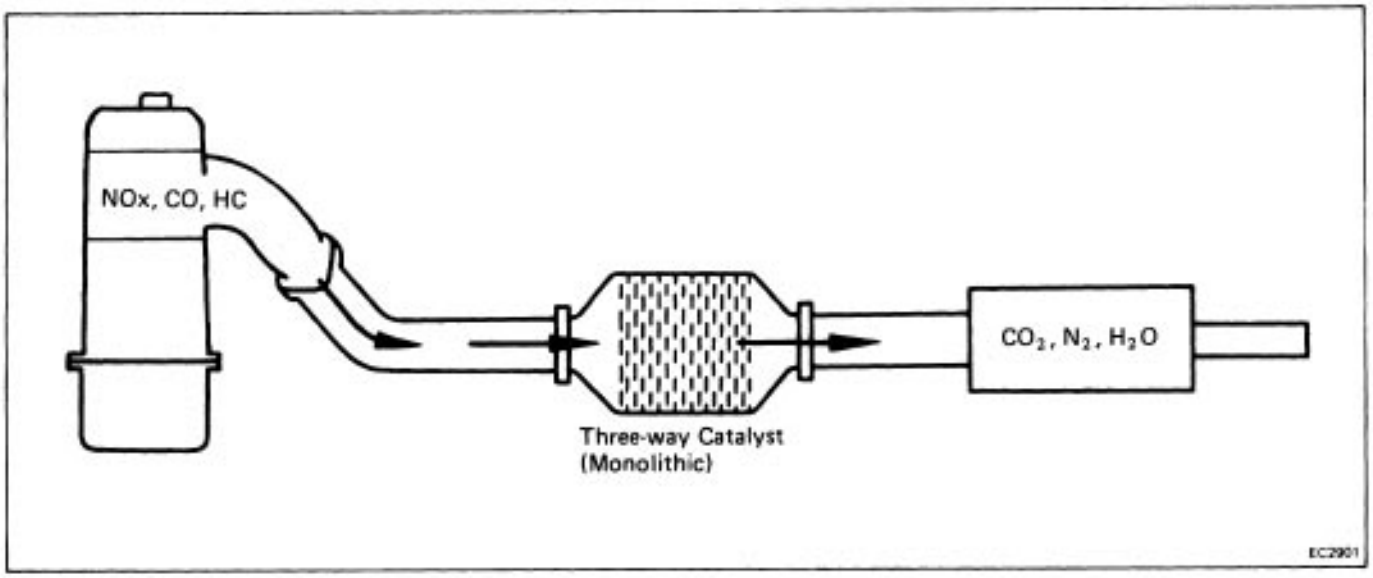

To reduce HC, CO and NOx emissions, they are oxidized, reduced and converted to nitrogen (N2), carbon dioxide (CO2) and water (H20) by the catalyst.

Exhaust port		TWC		Exhaust Gas
HC,CO, AND NOx	→	OXIDATION AND REDUCTION	→	CO2 H2O N2

INSPECTION OF EXHAUST PIPE ASSEMBLY

1. CHECK CONNECTIONS FOR LOOSENESS OR DAMAGE

2. CHECK CLAMPS FOR WEAKNESS, CRACKS OR DAMAGE

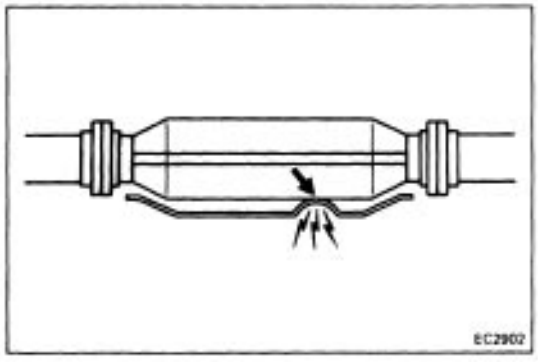

INSPECTION OF CATALYTIC CONVERTER

CHECK FOR DENTS OR DAMAGE

If any part of protector is damaged or dented to the extent that it contacts the catalyst, repair or replace.

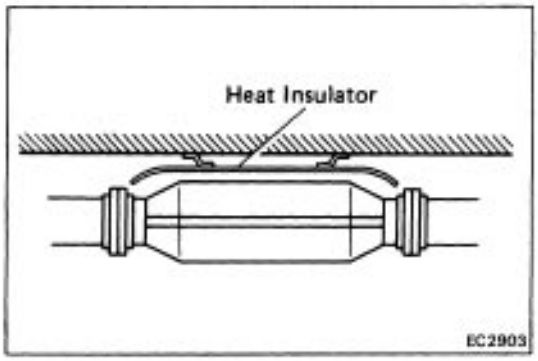

INSPECTION OF HEAT INSULATOR

1. CHECK HEAT INSULATOR FOR DAMAGE

2. CHECK FOR ADEQUATE CLEARANCE BETWEEN CATALYTIC CONVERTER AND HEAT INSULATOR

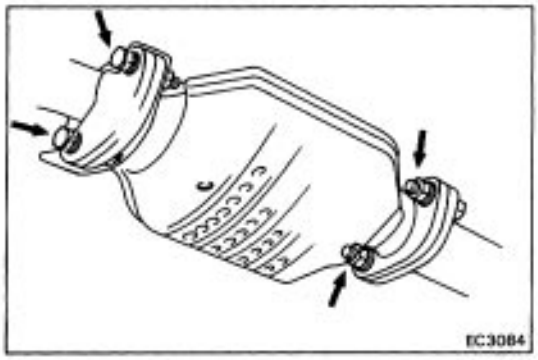

REPLACEMENT OF CATALYTIC CONVERTER

1. REMOVE CONVERTER

(a) Jack up the vehicle.

(b) Check that the converter is cool.

(e) Remove the bolts at the front and rear of the converter.

(d) Remove the converter and gaskets.

2. INSTALL CONVERTER

(a) Place new gaskets on the converter front and rear pipes, and connect the converter to the exhaust pipes.

(b) Tighten the bolts.

Torque: Catalyst – Exhaust pipe
440 kg–cm (32 ft–lb, 43 N–m)

ENGINE MECHANICAL

DESCRIPTION

4A–FE ENGINE

The 4A–FE engine is an in–line 4–cylinder 1.6 liter DOHC 16 valve engine.

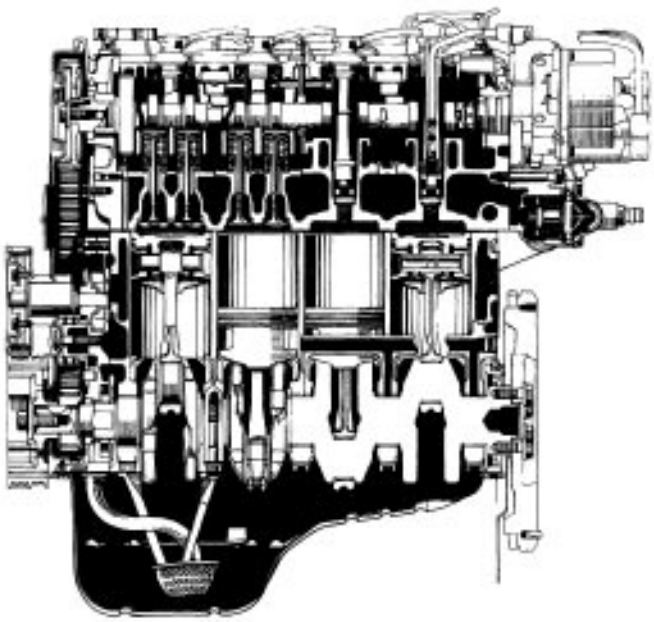

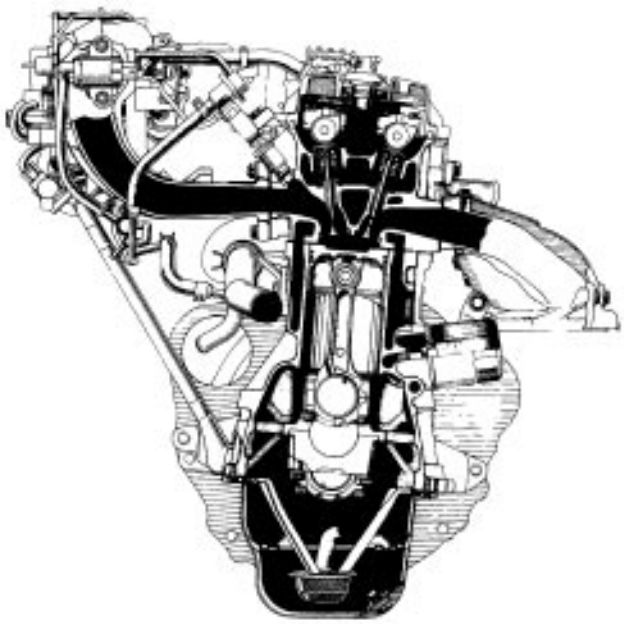

EM7830
EM7831

The 4A–FE engine is an in–line 4–cylinder engine with the cylinders numbered 1–2–3–4 from the front. The crankshaft is supported by 5 bearings inside the crankcase. These beare are made of aluminum alloy.

The crankshaft is integrated with 8 weights which are cast with it for balancing. Oil holes are made in the center of the crankshaft to supply oil to the connecting rods, bearings, pistons and other components.

The ignition order is 1–3–4–2. The cylinder head is made of aluminum alloy, with a cross flow type intake and exhaust layout with pent roof type combustion chambers. The spark plugs are located in the center of the combustion chamber.

The intake manifold has 4 independent long ports and utilizes the inertial supercharging effect to improve engine torque at low and medium speeds.

Exhaust and intake valves are equipped with irregular pitch springs made of special carbon steel which are capable of functioning no matter what the engine speed.

The exhaust side cam shaft is driven by a timing belt, and a gear on the exhaust side cam shaft engages with a gear on the intake side cam shaft to drive it. The cam journal is supported at 5 places between the valve lifters of each cylinder and on the front end of the cylinder head. Lubrication of the cam journal gear is accomplished by oil being supplied through the oiler port in the center of the camshaft.

Adjustment of the valve clearance is done by means of an outer shim type system, in which valve adjusting shims are located above the valve lifters. This permits replacement of the shims without removal of the camshafts.

The resin timing belt cover is composed of 3 pieces. A service hole is provided in the No. 1 belt cover for adjusting the timing belt tension. Pistons are made of high temperature–resistant aluminum alloy, and a depression is built into the piston head to prevent interference with the valves.

Piston pins are the semi–floating type, with the pins fastened to the connecting rods by pressure fittings, allowing the pistons and pins to float.

The No. 1 compression ring is made of stainless steel and the No. 2 compression ring is made of cast iron. The oil ring is made of a combination of steel and stainless steel. The outer diameter of each piston ring is slightly larger than the diameter of the piston and the flexibility of the rings allows them to hug the cylinder walls when they are mounted on the piston. Compression rings No.1 and No.2 work to prevent the leakage of gas from the cylinder and the oil ring works to scrape oil off the cylinder walls to prevent it from entering the combustion chambers.

The cylinder block is made of cast iron. It has 4 cylinders which are approximately 2 times the length of the piston stroke. The top of the cylinders is closed off by the cylinder head and the lower end of the cylinders becomes the crankcase in which the crankshaft is installed. In addition, the cylinder block contains a water jacket through which coolant is pumped to cool the cylinders.

The oil pan is bolted to the bottom of the cylinder block. The oil pan is an oil reservoir made of pressed steel sheet. A dividing plated is included inside the oil pan to keep sufficient oil in the bottom of the pan even when the vehicle is tilted. This dividing plate also prevents the oil from making waves when the vehicle is stopped suddenly and thus shifting the oil away from the oil pump suction pipe.

DESCRIPTION

4A–GE ENGINE

The 4A–GE engine is an in–line 4–cylinder 1.6 liter DOHC 16 valve engine.

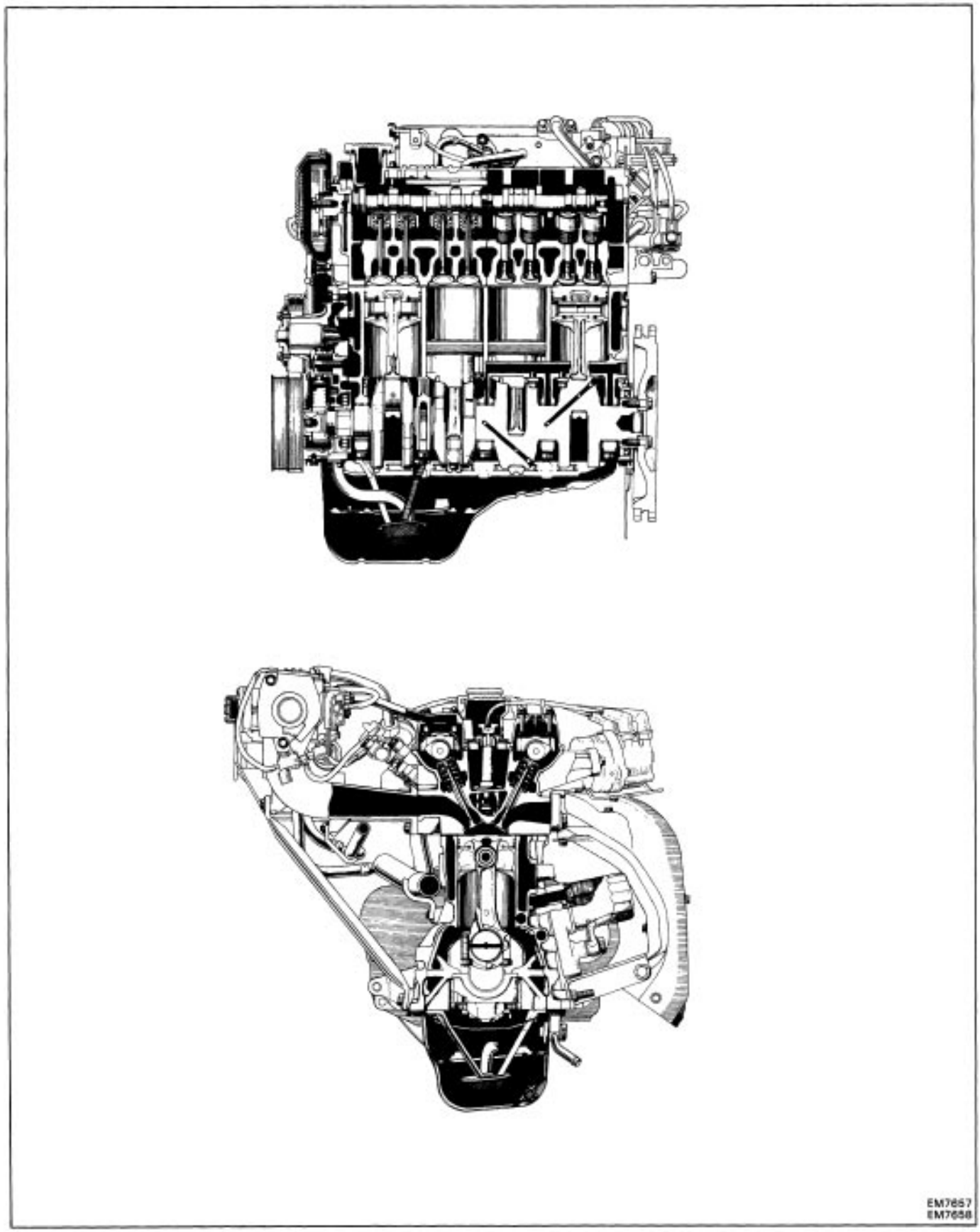

EM7657
EM7658

The 4A–GE engine is an in–line 4–cylinder engine with the cylinders numbered 1–2–3–4 from the front. The crankshaft is supported by 5 bearings specified by the inside of the crankcase. These bearings are made of aluminum alloy.

The crankshaft is integrated with 8 weights which are cast along with it for balance. Oil holes are built into the center of the crankshaft for supplying oil to the connecting rods, pistons and other components.

This engine's ignition order is 1–3–4–2. The cylinder– head is made of aluminum alloy, with a cross flow type intake and exhaust layout with pent roof type combustion chambers. The spark plugs are located in the center of the combustion chambers.

The intake manifold has 8 independent long ports and utilizes the inertial supercharging effect to improve engine torque at low and medium speeds.

Exhaust and intake valves are equipped with irregular pitch springs made of oil tempered silicon chrome steel wire which are capable of following the valves even at high engine speeds.

Both the exhaust side cam shaft and the intake side cam shaft are driven by a single timing belt. The cam journal is supported at 5 places between the valve lifters of each cylinder and on the cylinder head of front end. Lubrication of the cam journal and cam is accomplished by oil being supplied through the oiler port in the center of the camshaft.

Adjustment of the valve clearance is done by means of an outer shim type system, in which valve adjusting shims are located above the valve lifters. This permits replacement of the shims without removal of the camshafts.

The resin timing belt cover is composed of 3 pieces. A service hole is provided in the No.2 belt cover for adjusting the timing belt tension.

Pistons are made of high temperature–resistant aluminum alloy, and a depression is built into the piston head to prevent interference with valves.

Piston pins are the full– floating type, with the pins fastened to neither the piston boss nor the connect–ing rods. Instead, snap rings are fitted on both ends of the pins, preventing the pins from falling out.

The No. 1 compression ring is made of steel and the No. 2 compression ring is made of cast iron. The oil ring is made of a combination of steel and stainless steel. The outer diameter of each piston ring s slightly larger than the diameter of the piston and
the flexibility of the rings allows them to hug the cylinder walls when they are mounted on the piston. compression rings No. 1 and No. 2 work to prevent the leakage of gas from the cylinder and the oil ring works to scrape oil off the cylinder walls to prevent it from entering the combustion chamber.

The cylinder block is made of cast iron. It has 4 cylinders which are approximately 2 times the length of the piston stroke. The top of the cylinders is closed off by the cylinder head and the lower end of the cylinders becomes the crankcase, in which the crankshaft is installed. In addition, the cylinder block contains a water jacket, through which coolant is pumped to cool the cylinders.

The oil pan is bolted to the bottom of the cylinder block. The oil pan is an oil reservoir made of pressed steel sheet. A dividing plate is included inside the oil pan to keep sufficient oil in the bottom of the pan even when the vehicle is tilted. This dividing plate also prevents the oil from making waves when the vehicle is stopped suddenly and thus shifting the oil away from the oil pump suction pipe.

TROUBLESHOOTING (4A–FE)

ENGINE OVERHEATING

Problem	Possible cause	Remedy	Page
Engine overheats	Cooling system faulty	Troubleshoot cooling system	CO–4
	Incorrect ignition timing	Reset timing	IG–16

HARD STARTING

Problem	Possible cause	Remedy	Page
Engine will not crank or cranks slowly	Starting system faulty	Troubleshoot starting system	ST–2
Engine will not start/hard to start (crank OK)	No fuel supply to injector • No fuel in tank • Fuel pump not working • Fuel filter clogged • Fuel line clogged or leaking	Troubleshoot EFI system	FI–10
	EFI system problems	Repair as necessary	
	Ignition problems • Ignition coil • Igniter • Distributor (IIA)	Perform spark test	IG–4
	Spark plug faulty	Inspect plugs	IG–5
	High–tension cord disconnected or broken	Inspect cords	IG–5
	Vacuum leaks • PCV line • EGR line (Calif. and 4WD) • Intake manifold • Throttle body • Brake booster line	Repair as necessary	
	Low compression	Check compression	EM–29

ROUGH IDLING

Problem	Possible cause	Remedy	Page
Rough idle, stalls or misses	Spark plug faulty	Inspect plugs	IG–5
	High–tension cord faulty	Inspect cords	IG–5
	Ignition wiring faulty	Inspect wiring	
	Ignition problems		
	• Ignition coil	Inspect coil	
	• Igniter	Inspect igniter	
	• Distributor 111A)	Inspect distributor	
	Incorrect ignition timing	Reset timing	IG–16
	Incorrect valve clearance	Adjust valve clearance	EM–16
	Vacuum leaks	Repair as necessary	
	• PCV line		
	• EGR line (Calif. and 4WD)		
	• Intake manifold		
	• Throttle body		
	• Brake booster line		
	Incorrect idle speed	Adjust idle speed	
	EFI system problems	Repair as necessary	
	EGR valve faulty (Calif. and 4WD)	Check EGR valve	
	Engine overheats	Check cooling system	CO–4
	Low compression	Check compression	EM–29

ENGINE HESITATES/POOR ACCELERATION

Problem	Possible cause	Remedy	Page
Engine hesitates/ poor acceleration	Spark plug faulty	Inspect plugs	IG–5
	High–tension cord faulty	Inspect cords	IG–5
	Vacuum leaks	Repair as necessary	
	• PCV line		
	• EGR line (Calif. and 4WD)		
	• Intake manifold		
	• Throttle body		
	• Brake booster line		
	Incorrect ignition timing	Reset timing	IG–16
	Incorrect valve clearance	Adjust valve clearance	
	Fuel system clogged	Check fuel system	
	Air cleaner clogged	Check air cleaner	
	EFI system problems	Repair as necessary	
	Engine overheats	Check cooling system	
	Low compression	Check compression	EM–29

ENGINE DIESELING

Problem	Possible cause	Remedy	Page
Engine dieseling (turns when ignition switch is turned off)	EFI system problems Incorrect ignition timing EGR system faulty (Calif. and 4WD)	Repair as necessary Reset timing Check EGR system	IG–16

AFTER FIRE, BACKFIRE

Problem	Possible cause	Remedy	Page
Muffler explosion (after fire) on deceleration only	Deceleration fuel cut system always off DP system always off	Check EFI (fuel cut) system Check DP system	
Muffler explosion (after fire) all the time	Air cleaner clogged EFI system problem Incorrect ignition timing Incorrect valve clearance	Check air cleaner Repair as necessary Reset timing Adjust valve clearance	IG–16
Engine backfires	EFI system problem Vacuum leak • PCV hoses • Intake manifold • Throttle body • Brake booster line Insufficient fuel flow Incorrect ignition timing Incorrect valve clearance Carbon deposits in combustion chambers	Repair as necessary Check hoses and repair as necessary Troubleshoot fuel system Reset timing Adjust valve clearance Inspect cylinder head	IG–16

EXCESSIVE OIL CONSUMPTION

Problem	Possible cause	Remedy	Page
Excessive oil consumption	Oil leak PCV line clogged Piston ring worn or damaged Valve stem and guide bushing worn Valve stem oil seal worn or damaged	Repair as necessary Check PCV system Check rings Check valves and guide bushings Check oil seals	EM–143

POOR GASOLINE MILEAGE

Problem	Possible cause	Remedy	Page
Poor gasoline mileage	Fuel leak	Repair as necessary	
	Air cleaner clogged	Check air cleaner	
	Incorrect ignition timing	Reset timing	IG–16
	EFI system problems • Injector faulty • Deceleration fuel cut system faulty	Repair as necessary	
	Idle speed too high	Adjust idle speed	MA–7
	Spark plug faulty	Inspect plugs	IG–5
	EGR system always on (Calif. and 4WD)	Check EGR system	
	Low compression	Check compression	EM–29
	Tires improperly inflated	Inflate tires to proper pressure	
	Clutch slips	Troubleshoot clutch	
	Brakes drag	Troubleshoot brakes	

UNPLEASANT ODOR

Problem	Possible cause	Remedy	Page
Unpleasant odor	Incorrect idle speed	Adjust idle speed	MA–7
	Incorrect ignition timing	Reset timing	IG–16
	Vacuum leaks • PCV line • EGR line (Calif. and 4WD) • Intake manifold • Throttle body • Brake booster line	Repair as necessary	
	EFI system problems	Repair as necessary	

TROUBLESHOOTING (4A–GE)

ENGINE OVERHEATING

Problem	Possible cause	Remedy	Page
Engine overheats	Cooling system faulty Incorrect ignition timing	Troubleshoot cooling system Reset timing	CO–4 IG–19

HARD STARTING

Problem	Possible cause	Remedy	Page
Engine will not crank or cranks slowly	Starting system faulty	Troubleshoot starting system	ST–2
Engine will not start/ hard to start (crank OK)	No fuel supply to injector • No fuel in tank • Fuel pump not working • Fuel Filter clogged • Fuel line clogged or leaking	Troubleshoot EFI system	FI–90
	E F I system problems	Repair as necessary	
	Ignition problems • Ignition coil • Igniter • Distributor	Perform spark test	IG–8
	Spark plug faulty	Inspect plugs	IG–9
	High–tension cord disconnected or broken	Inspect cords	IG–9
	Vacuum leaks • PCV line • EGR line • Intake manifold • Throttle body • Brake booster line	Repair as necessary	
	Air suction between air flow meter and throttle body	Repair as necessary	
	Low compression	Check compression	EM–29

ROUGH IDLING

Problem	Possible cause	Remedy	Page
Rough idle, stalls or misses	Spark plug faulty	Inspect plugs	IG–9
	High–tension cord faulty	Inspect cords	IG–9
	Ignition wiring faulty	Inspect wiring	
	Ignition problems		
	• Ignition coil	Inspect coil	
	• Igniter	Inspect igniter	
	• Distributor	Inspect distributor	
	Incorrect ignition timing	Reset timing	IG–19
	Incorrect valve clearance	Adjust valve clearance	EM–22
	Vacuum leaks	Repair necessary	
	• PCV line		
	• EGR line		
	• Intake manifold		
	• Throttle body		
	• Brake booster line		
	Air suction between air flow meter and throttle body	Repair as necessary	
	Incorrect idle speed	Adjust idle speed	MA–19
	E F I system problems	Repair as necessary	
	EGR valve faulty	Check EGR valve	
	Engine overheats	Check cooling system	CO–4
	Low compression	Check compression	EM–29

ENGINE HESITATES/POOR ACCELERATION

Problem	Possible cause	Remedy	Page
Engine hesitates/ poor acceleration	Spark plug faulty	Inspect plugs	IG–9
	High–tension cord faulty	Inspect cords	IG–9
	Vacuum leaks • PCV line • EGR line • Intake manifold • Throttle body • Brake booster line	Repair as necessary	
	Air suction between air flow meter and throttle body	Repair as necessary	
	Incorrect ignition timing	Reset timing	IG–19
	Incorrect valve clearance	Adjust valve clearance	EM–22
	Fuel system clogged	Check fuel system	
	Air cleaner clogged	Check air cleaner	
	E F I system problems	Repair as necessary	
	Engine overheats	Check cooling system	CO–4
	Low compression	Check compression	EM–29

ENGINE DIESELING

Problem	Possible cause	Remedy	Page
Engine dieseling (turns when ignition switch is turned off)	EF I system problems	Repair as necessary	
	Incorrect ignition timing	Reset timing	IG–19
	EGR system faulty	Check EGR system	

AFTER FIRE, BACKFIRE

Problem	Possible cause	Remedy	Page
Muffler explosion (after fire) on deceleration only	Deceleration fuel cut system always off DP system always off	Check E F I (fuel cut) system Check DP system	
Muffler explosion (after fire) all the time	Air cleaner clogged E F I system problem Incorrect ignition timing Incorrect valve clearance	Check air cleaner Repair as necessary Reset timing Adjust valve clearance	 IG–19 EM–22
Engine backfires	E F I system problem Vacuum leak • PCV hoses • Intake manifold • Throttle body • Brake booster line Air suction between air flow meter and throttle body Insufficient fuel flow Incorrect ignition timing Incorrect valve clearance Carbon deposits in combustion chambers	Repair as necessary Check hoses and repair as necessary Repair as necessary Troubleshoot fuel system Reset timing Adjust valve clearance Inspect cylinder head	 IG–19 EM–22

EXCESSIVE OIL CONSUMPTION

Problem	Possible cause	Remedy	Page
Excessive oil consumption	Oil leak PCV line clogged Piston ring worn or damaged Valve stem and guide bushing worn Valve stem oil seal worn or damaged	Repair as necessary Check PCV system Check rings Check valves and guide bushings Check oil seals	 EM–143

POOR GASOLINE MILEAGE

Problem	Possible cause	Remedy	Page
Poor gasoline mileage	Fuel leak	Repair as necessary	
	Air cleaner clogged	Check air cleaner	
	Incorrect ignition timing	Reset timing	
	E F I system problems • Injector faulty • Deceleration fuel cut system faulty	Repair as necessary	
	Idle speed to high	Adjust idle speed	MA–19
	Spark plug faulty	Inspect plugs	IG–9
	EG R system always on	Check EGR system	
	Low compression	Check compression	EM–29
	Tires improperly inflated	Inflate tires to proper pressure	
	Clutch slips	Troubleshoot clutch	
	Brakes drag	Troubleshoot brakes	

UNPLEASANT ODOR

Problem	Possible cause	Remedy	Page
Unpleasant odor	Incorrect idle speed	Adjust idle speed	MA–19
	Incorrect ignition timing	Reset timing	IG–19
	Vacuum leaks • PCV line • EGR line • Intake manifold • Throttle body • Brake booster line	Repair as necessary	
	E F I system problems	Repair as necessary	

ENGINE TUNE–UP (4A–FE)

INSPECTION OF ENGINE COOLANT

(See page CO–5)

INSPECTION OF ENGINE OIL

(See page LU–5)

INSPECTION OF AIR FILTER

(See page MA–5)

INSPECTION OF BATTERY

(See page CH–3)

Standard specific gravity

When fully charged at 20˚C (68˚F): 1.25 – 1.27

(Delco) Green Dot visible

INSPECTION OF HIGH–TENSION CORDS

(See page IG–5)

NOTICE: DO NOT pull on the cords or bend the wires.
The conductor inside maybe damaged.

Maximum resistance: 25 kΩ per cord

INSPECTION OF SPARK PLUGS

(See page IG–5)

Using a plug wrench (16 mm), remove the spark plugs.

Recommended spark plug:

ND 0.16R–U
NGK BCPR5EY

Correct electrode gap: 0.8 mm (0.031 in.)

INSPECTION OF ALTERNATOR DRIVE BELT

(See page CH–3)

Belt tension gauge:

Nippondenso BTG–20 (95506–00020) or
Borroughs No.BT–33–73F

Drive belt tension: New belt 160 ± 20 lb
Used belt 130 ± 20 lb

INSPECTION AND ADJUSTMENT OF VALVE CLEARANCE

HINT: Inspect and adjust the valve clearance when the engine is cold.

1. DISCONNECT HIGH–TENSION CORDS FROM SPARK PLUGS

2. REMOVE CYLINDER HEAD COVER (See page EM–31)

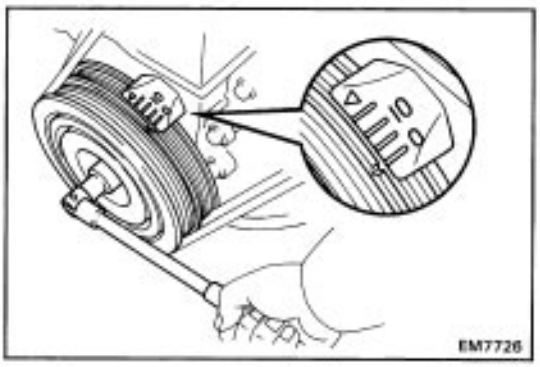

3. SET NO.1 CYLINDER TO TDC/COMPRESSION

(a) Turn the crankshaft pulley and align its groove with timing mark ”O” of the No.1 timing belt cover.

(b) Check that the valve lifters on the No. 1 cylinder are loose and valve lifters on the No.4 cylinder are tight.

If not, turn the crankshaft one revolution (360°) and align the mark as above.

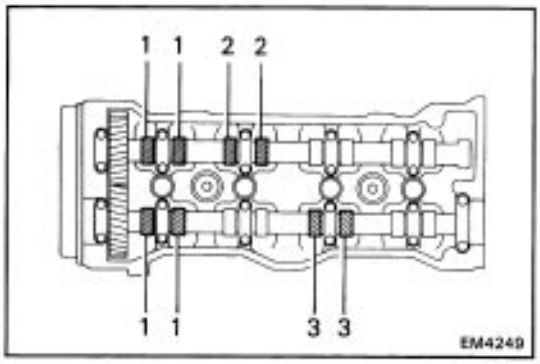

4. INSPECT VALVE CLEARANCE

(a) Check only those valves indicated in the illustration

- Using a thickness gauge, measure the clearance be tween the valve lifter and camshaft.
- Record the valve clearance measurements which are out of specification. They will be used later to determine the required replacement adjusting shim

Valve clearance (Cold):

Intake 0.15 – 0.25 mm (0.006 – 0.0 10 in.)

Exhaust 0.20 – 0.30 mm (0.008 – 0.012 in.)

(b) Turn the crankshaft one revolution (360°) and align the mark as above. (See procedure step 3)

(c) Check only the valves indicated as shown.

Measure the valve clearance.

(See procedure step (a)).

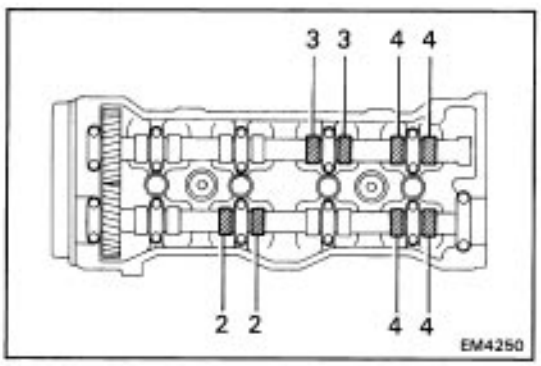

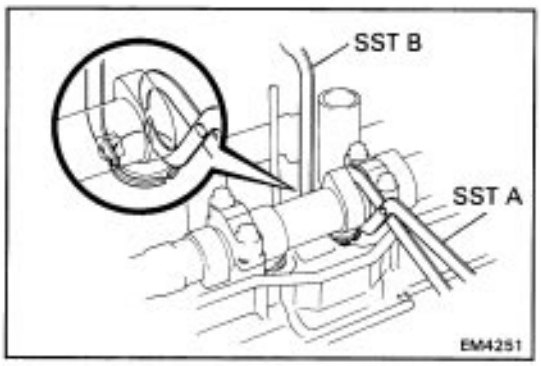

5. ADJUST VALVE CLEARANCE

(a) Using SSTs, press down the valve lifter with SST A and hold the valve lifter down with SST B.

SST 09248–55010

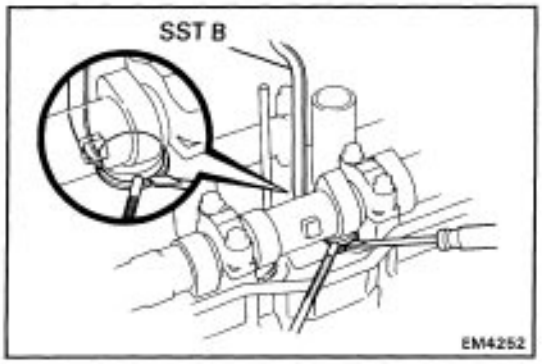

(b) Remove the adjusting shim with a small screwdriver and magnetic finger.

HINT: For easy removal of the shim, when setting SST B, set it on the lifter so there is a wide space in the removal direction.

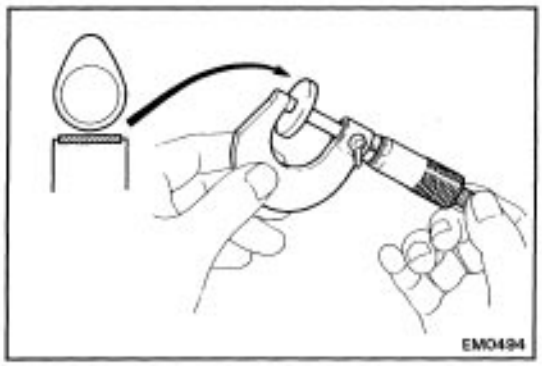

(c) Determine the replacement adjusting shim size by using the following Formula or Charts.

- Using a micrometer, measure the thickness of the shim which was removed.
- Calculate the thickness of the new shim so the valve clearance comes within specified value.

T ..... Thickness of shim used
A ..... Valve clearance measured
N ..... Thickness of shim new

Intake side: N = T + (A – 0.20 mm (0.008 in.))
Exhaust side: N = T + (A – 0.25 mm (0.010 in.))

- Select a shim with a thickness as close as possible to the calculated values.

HINT: Shims are available in 17 sizes, in increments of 0.050 mm (o.0020 in.), from 2.500 mm (0.0984 in.) to 3.300 mm (0. 1299 in.).

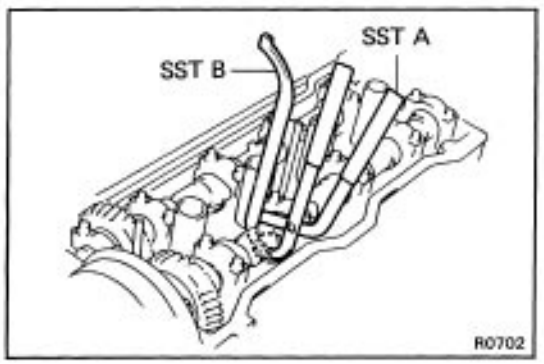

(d) Install a new adjusting shim.

- Place a new adjusting shime on the valve lifter.
- Using SST A, press down the valve lifter and remove SST B.

SST 09248–55010

6. RECHECK VALVE CLEARANCE
7. INSTALL CYLINDER HEAD COVER (See page EM–39)
8. CONNECT HIGH–TENSION CORDS TO SPARK PLUGS

Adjusting Shim Selection Chart

Intake

| Measured Clearance (mm) | Installed Shim Thickness (mm) | | |

Adjusting Shim Selection Chart

Exhaust

| Measured Clearance (mm) | Installed Shim Thickness (mm) | | |

INSPECTION AND ADJUSTMENT OF IGNITION TIMING

(See page IG–16)

Ignition timing: 10° BTDC @ idle
(w/ connected TE1 and E1)

INSPECTION AND ADJUSTMENT OF IDLE SPEED

(See page MA–7)

Idle speed:
2WD 700 rpm (w/ cooling fan OFF)
4WD 800 rpm (w/ cooling fan OFF)

INSPECTION AND ADJUSTMENT OF DASH POT (DP) SETTING SPEED

(See page EC–11)

DP setting speed: 2WD 1,500 rpm
4WD M/T 1,800 rpm
4WD A/T 2,200 rpm
(w/ cooling fan OFF)

ENGINE TUNE–UP (4A–GE)

INSPECTION OF ENGINE COOLANT

(See page CO–5)

INSPECTION OF ENGINE OIL

(See page LU–5)

INSPECTION OF AIR FILTER

(See page MA–17)

INSPECTION OF BATTERY

(See page CH–3)

Standard specific gravity:

1.25 – 1.27 when fully charged at 20˚C (68˚F)

(Delco) Green Dot visible

INSPECTION OF HIGH–TENSION CORDS

(See page IG–9)

NOTICE: DO NOT pull on the cords or bend the wires. The conductor inside may be damaged.

Maximum resistance: 25 kΩ per cord

INSPECTION OF SPARK PLUGS

Using plug wrench (16 mm), remove the spark plugs.

Platinum Tipped Type

(See page IG–10)

NOTICE:

- **Never use a wire brush for cleaning**
- **Never attempt to adjust gap on used plug**
- **Spark plugs should be replaced every 60,000 miles (100,000 km)**

Maximum electrode gap: 1.0 mm (0.039 in.)

Correct electrode gap of new plug:

0.8 mm (0.031 in.)

Recommended spark plugs:

ND PK20R8

NGK BKR6EP8

INSPECTION OF ALTERNATOR DRIVE BELT

(See page CH–3)

Belt tension gauge:

Nippondenso BTG–20 (95506–00020) or

Borroughs No. BT–33–73F

Drive belt tension: New belt 175 ± 5 lb

Used belt 115 ± 20 lb

INSPECTION AND ADJUSTMENT OF VALVE CLEARANCE

HINT: Inspect and adjust the valve clearance when the engine is cold.

1. REMOVE PLUG CORD COVER

2. DISCONNECT HIGH–TENSION CORDS FROM SPARK PLUGS

3. REMOVE CYLINDER HEAD COVERS (See page EM–45)

4. SET NO.1 CYLINDER TO TDC/COMPRESSION

(a) Turn the crankshaft pulley and align its groove with the timing mark ”O” of the No. 1 timing belt cover.

(b) Check that the valve lifters on the No. 1 cylinder are loose and valve lifters on the No.4 cylinder are tight.

If not, turn the crankshaft one revolution (360°) and align the mark as above.

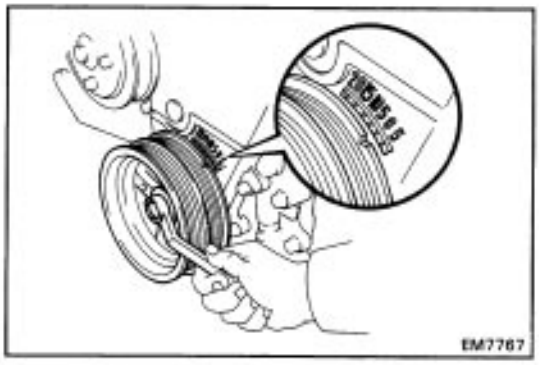

5. INSPECT VALVE CLEARANCE

(a) Check only those valves indicated as shown.

- Using a feeler gauge, measure the clearance between the valve lifter and camshaft.
- Record the valve clearance measurements which are out of specification. They will be used later to determine the required replacement adjusting shim.

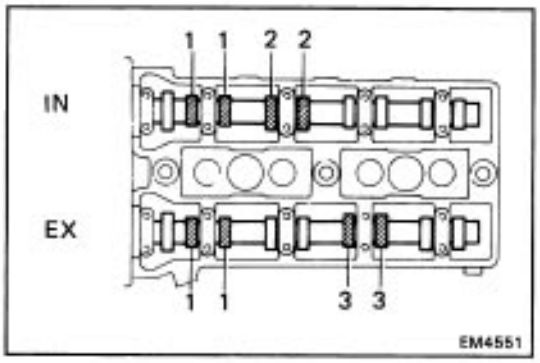

Valve clearance (Cold):

Intake 0.15 – 0.25 mm (0.006 – 0.010 in.)

Exhaust 0.20 – 0.30 mm (0.008 – 0.012 in.)

(b) Turn the crankshaft one revolution (360°) and align the mark as above. (See procedure step 4)

(c) Check only the valves indicated as shown.

Measure the valve clearance.

(See procedure step (a)).

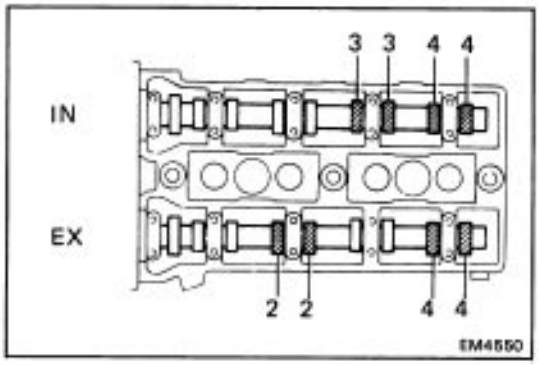

(d) Remove the adjusting shim.

- Turn the crankshaft to position the cam love of the camshaft on the adjusting valve upward.
- Using SST (A), press down the valve lifter and place

SST (B), between the camshaft and valve lifter.

Remove SST (A).

SST 09248–55010

HINT: Before pressing down the valve lifter, position the notch toward the spark plug.

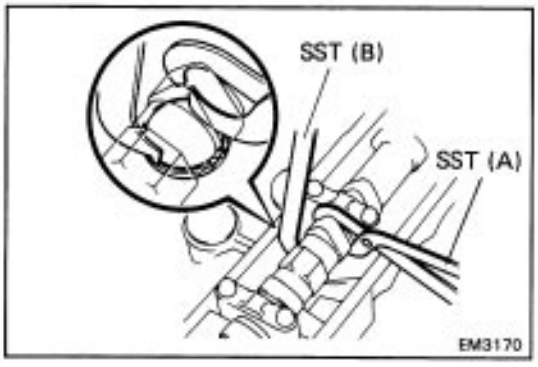

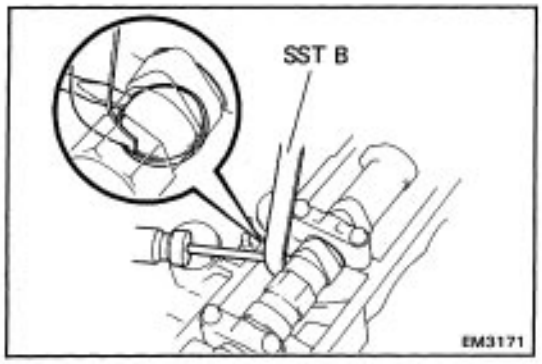

- Remove the adjusting shim with a small screwdriver and magnetic finger.

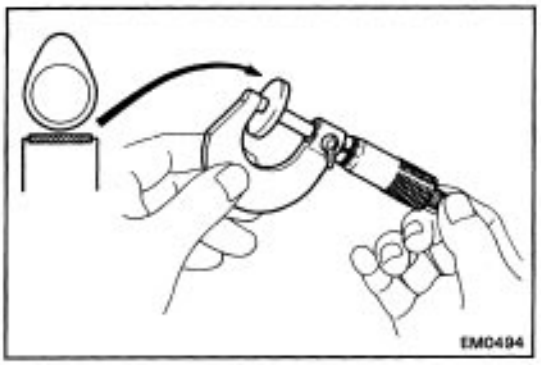

(e) Determine the replacement adjusting shim size by using the following Formula or Charts:

- Using a micrometer, measure the thickness of the shim which was removed.
- Calculate the thickness of a new shim so the valve clearance comes within specified value.
  T ..... Thickness of used shim
  A ..... Measured valve clearance
  N ..... Thickness of new shim

Intake N = T + (A – 0.20 mm (0.008 in.))
Exhaust N = T + (A – 0.25 mm (0.010 in.))

- Select a new shim with a thickness as close as possible to the calculated values.

HINT: Shims are available in seventeen sizes of 0.05 mm (0.0020 in.), from 2.50 mm (0.0984 in.) to 3.30 mm (0.1299 in.).

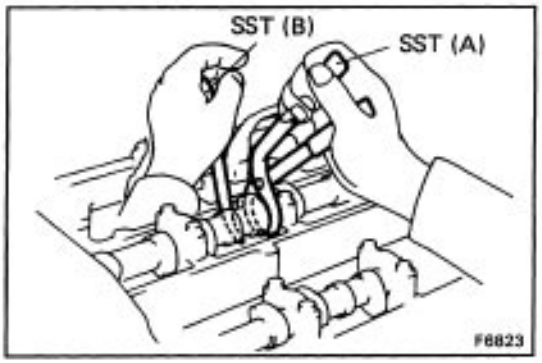

(f) Install a new adjusting shim.

- Place a new adjusting shim on the valve lifter.
- Using SST (A), press down the valve lifter and remove SST (B).

SST 09248–55010

(g) Recheck the valve clearance.

6. REINSTALL CYLINDER HEAD COVERS
(See page EM–48)
7. CONNECT HIGH–TENSION CORDS TO SPARK PLUGS
8. REINSTALL PLUG CORD COVER

Adjusting Shim Selection Chart

Intake

| Measured Clearance (mm) | Installed Shim Thickness (mm) | | |

Adjusting Shim Selection Chart

Exhaust

| Measured Clearance (mm) | Installed Shim Thickness (mm) | | |

INSPECTION AND ADJUSTMENT OF IGNITION TIMING

(See page IG–19)

Ignition timing: 10° BTDC @ idle
(w/ connected TE1 and E1)

INSPECTION AND ADJUSTMENT OF IDLE SPEED

(See page MA–19)

Idle speed: 800 rpm (w/ cooling fan OFF)

INSPECTION AND ADJUSTMENT OF DASH POT (DP) SETTING SPEED

(See page EC–26)

DP setting speed: 1,800 rpm (w! cooling fan OFF)

IDLE AND OR 2500 RPM HC CO CONCENTRATION CHECK METHOD

HINT: This check is used only to determine whether or not the idle HC/CO complies with regulations.

1. INITIAL CONDITIONS

(a) Engine at normal operating temperature
(b) Air cleaner installed
(c) All pipes and hoses of air induction system connected
(d) All accessories switched OFF
(e) All vacuum lines properly connected
HINT: All vacuum hoses for EGR systems, etc. should be properly connected.
(f) EFI system wiring connectors fully plugged
(g) Transmission in neutral
(h) Tachometer and HC/CO meter calibrated and at hand

2. START ENGINE

3. RACE ENGINE AT 2,500 RPM FOR APPROX. 2 MINUTES

4. INSERT HC/CO METER TESTING PROBE INTO TAIL-PIPE AT LEAST 40 cm (1.3 ft)

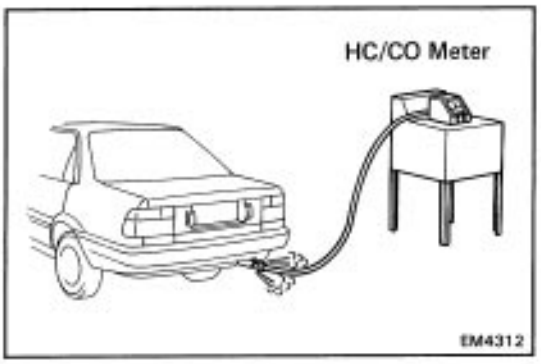

5. CHECK HC/CO CONCENTRATION AT IDLE AND/OR 2,500 RPM

Complete the measuring within three times.
HINT: When performing the 2 mode (2,500 rpm and idle) test, follow the measurement order prescribed by regulations.
If the HC/CO concentration at 2,500 rpm does not comply with regulations, try the following procedure.
Race the engine again at 2,500 rpm for approx. 1 minute and quickly repeat steps 4 and 5 above.
This may correct the problem.

Troubleshooting

If the HC/CO concentration does not comply with regulations, perform troubleshooting in the order given below.

(a) Check oxygen sensor operation.
(See page FI–77 or 159)

(b) See the table below for possible causes, and then inspect and correct the applicable causes if necessary.

HC	CO	Problems	Causes
High	Normal	Rough idle	1. Faulty ignition: • Incorrect timing • Fouled, shorted or improperly gapped plugs • Open or crossed high–tension cords • Cracked IIA or distributor cap 2. Incorrect valve clearance 3. Leaky EGR valve (4A–FE (Calif. and 4WD) and 4A–GE) 4. Leaky exhaust valves 5. Leaky cylinder
High	Low	Rough idle (Fluctuating HC reading)	1. Vacuum leak: • Vacuum hose • EGR valve (4A–FE (Calif. and 4WD) and 4A–GE) • Intake manifold • Throttle body • PCV line • Cylinder head gasket • Brake booster line 2. Lean mixture causing misfire
High	High	Rough idle (Black smoke from exhaust)	1. Clogged air filter 2. Plugged PCV valve (4A–FE) 3. Faulty EFI system: • Faulty pressure regulator • Clogged fuel return line • Defective water temp. sensor • Defective intake air temp. sensor • Faulty ECU • Faulty injector • Faulty cold start injector • Faulty throttle position sensor • Faulty vacuum sensor (4A–FE) • Faulty air flow meter (4A–GE)

COMPRESSION CHECK

HINT: If there is lack of power, excessive oil consumption or poor fuel economy, measure the compression pressure.

1. WARM UP AND STOP ENGINE

2. DISCONNECT COLD START INJECTOR CONNECTOR

3. DISCONNECT DISTRIBUTOR CONNECTOR(S)

4. (4A–GE)

REMOVE PLUG CORD COVER

5. REMOVE SPARK PLUGS (See page IG–5 or 10)

6. CHECK CYLINDER COMPRESSION PRESSURE

(a) Insert a compression gauge into the spark plug hole.

(b) Fully open the throttle.

(c) While cranking the engine, measure the compression pressure.

HINT: Always use a fully charged battery to obtain engine revolution of 250 rpm or more.

(d) Repeat steps (a) through (c) for each cylinder.

NOTICE: This measurement must be done in as short a time as possible.

Compression pressure:

4A–FE 13.5 kg/cm° (191 psi, 1,320 kPa)

4A–GE 13.4 kg/cm° (190 psi, 1,314 kPa)

Minimum pressure:

10.0 kg/cm° (142 psi, 981 kPa)

Difference between each cylinder:

1.0 kg/cm° (14 psi, 98 kPa) or less

(e) If the cylinder compression in one or more cylinders is low, pour a small amount of engine oil into the cylinder through the spark plug hole and repeat steps (a) through (e) for the cylinder with low compression.

- If adding oil helps the compression chances are that the piston rings and/or cylinder bore are worn or damaged.
- If pressure stays low, a valve may be sticking or seating improperly, or there may be leakage past the gasket.

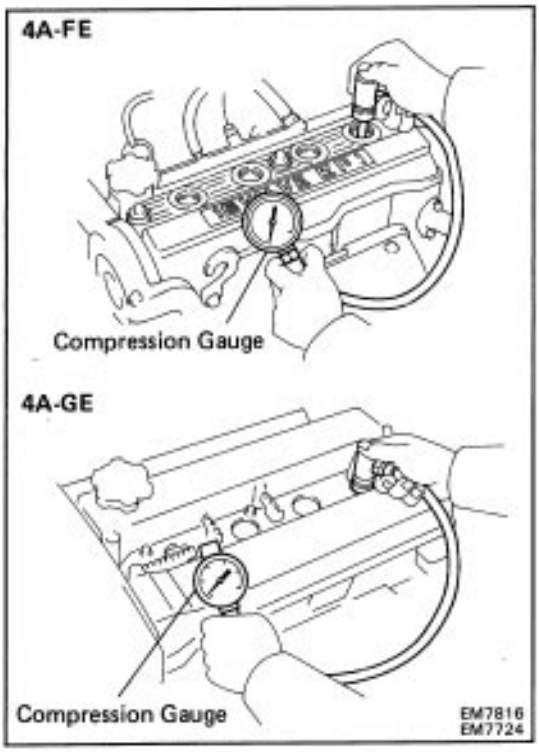

7. REINSTALL SPARK PLUGS (See page IG–6 or 10)

Torque: 180 kg–cm (73 ft–lb, 18 N–m)

8. (4A–GE)

REINSTALL PLUG CORD COVER

9. RECONNECT DISTRIBUTOR CONNECTOR(S)

10. RECONNECT COLD START INJECTOR CONNECTOR

TIMING BELT (4A–FE)

COMPONENTS

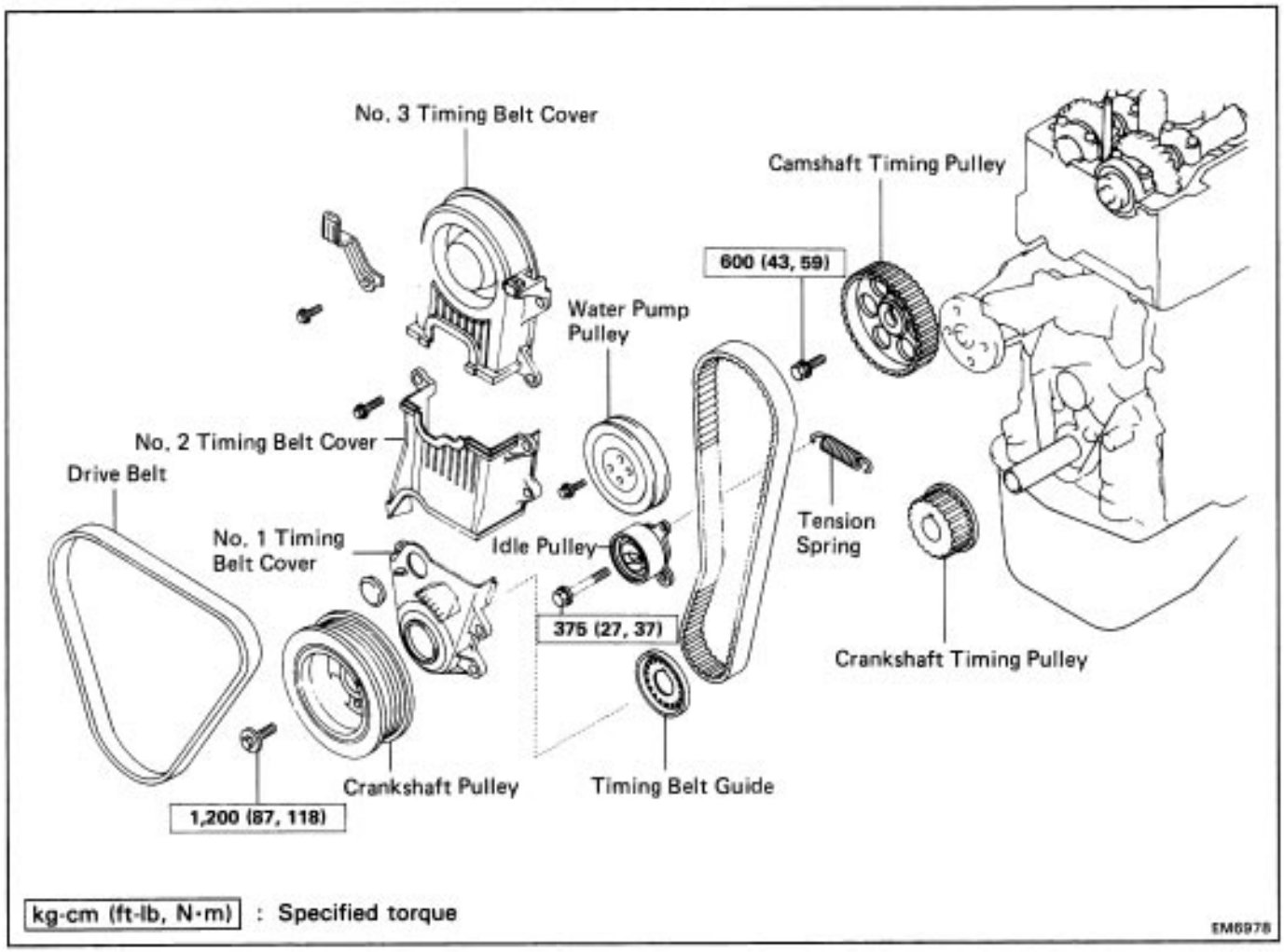

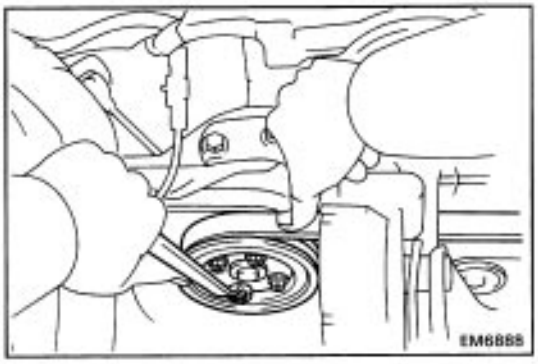

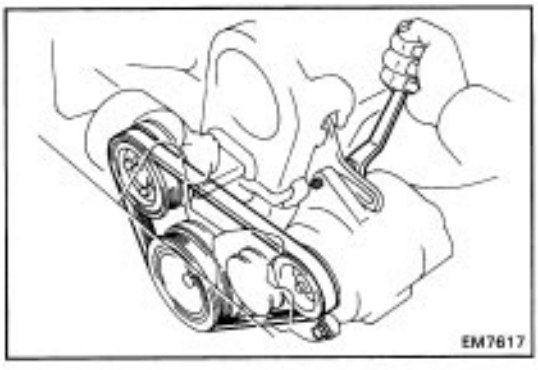

REMOVAL OF TIMING BELT

1. REMOVE RH FRONT WHEEL

2. REMOVE RH ENGINE UNDER COVER

3. REMOVE WASHER TANK

4. LOOSEN WATER PUMP PULLEY BOLTS AND REMOVE ALTERNATOR DRIVE BELT

(a) Stretch the belt tight and loosen the water pump pulley bolts.

(b) Loosen the pivot nut and adjusting bolt, and remove drive belt.

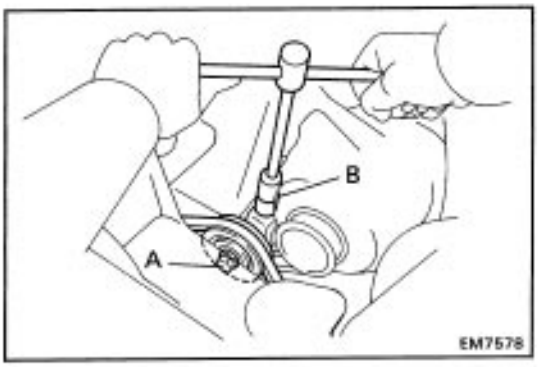

5. (with A/C)

REMOVE A/C COMPRESSOR DRIVE BELT

(a) Loosen the idler pulley mount bolt A.

(b) Loosen the adjusting bolt B and remove the drive belt.

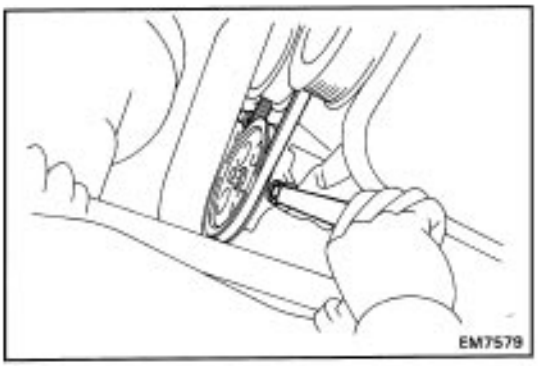

6. (w/ PS)

REMOVE PS PUMP DRIVE BELT

(a) Loosen the pivot and lock bolts.

(b) Swing PS pump toward the engine and remove the drive belt.

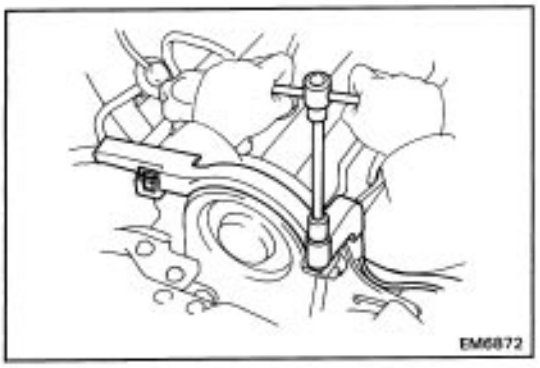

7. DISCONNECT ENGINE WIRE FROM NO.3 TIMING BELT COVER

(a) Disconnect the following connectors and wire:

- Alternator connector
- Alternator wire
- Oil pressure switch connector
- (with A/C)
  Compressor connector

(b) Remove the bolt.

(c) Disconnect the wire clamp from the wire bracket, and disconnect the engine wire from the timing belt cover.

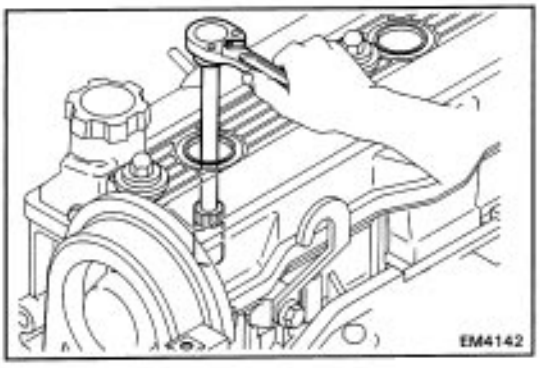

8. REMOVE SPARK PLUG

(a) Disconnect the high–tension cord from spark plug.

(b) Using a plug wrench (16 mm), remove the spark plugs.

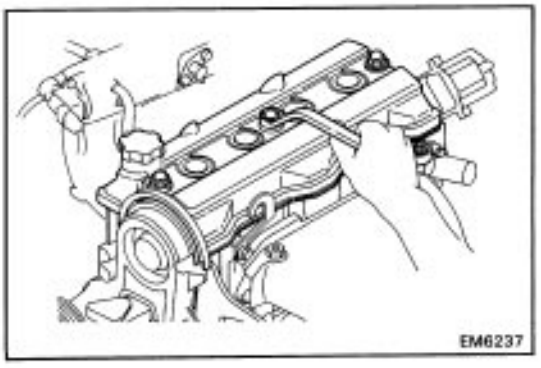

9. REMOVE CYLINDER HEAD COVER

(a) Disconnect the PCV hoses from the cylinder head cover.

(b) Remove the three cap nuts, grommet and cylinder head cover with the gasket.

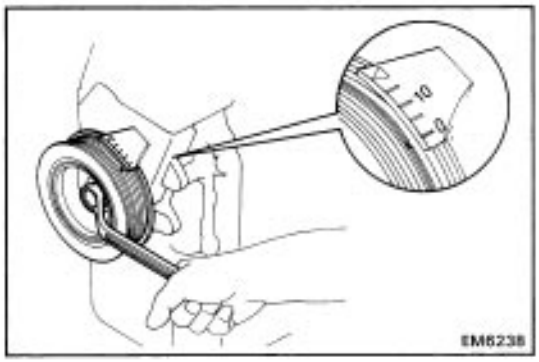

10. SET NO.1 CYLINDER AT TDC/COMPRESSION

(a) Turn the crankshaft pulley and align its groove with the No.1 timing belt cover.

(b) Check that the valve lifters on the No. 1 cylinder are loose. If not, turn the crankshaft pulley one complete revolution (360°).

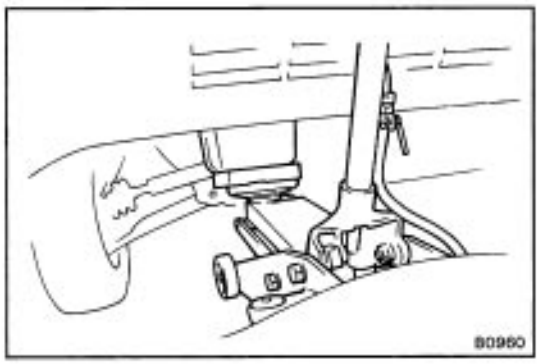

11. REMOVE RH ENGINE MOUNTING INSULATOR

(a) Set the jack to the engine.

HINT: Place a wooden block between the jack and engine.

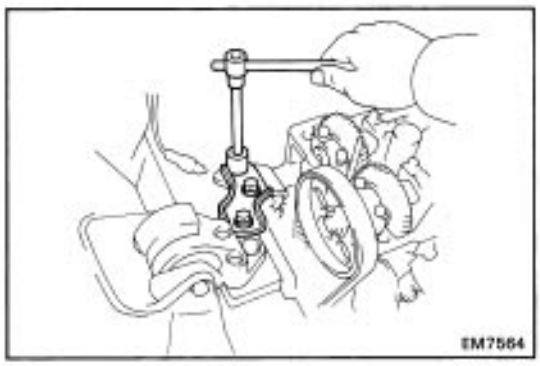

(b) Remove the three bolts and mounting stay.

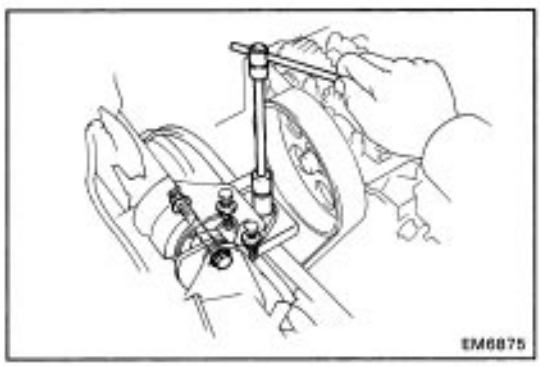

(c) Remove the bolt, two nuts, through bolt and RH mounting.

12. REMOVE WATER PUMP PULLEY

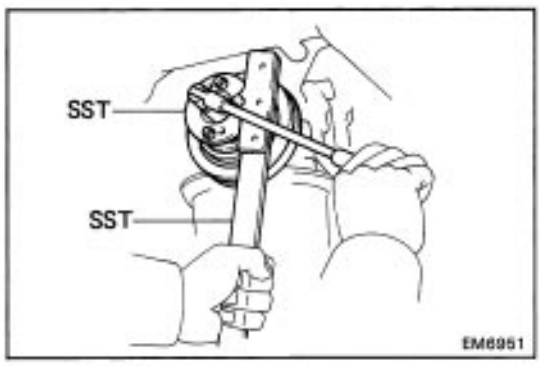

13. REMOVE CRANKSHAFT PULLEY

(a) Using SST to hold the crankshaft pulley, remove the pulley bolt.

SST 09213–14010 and 09330–00021

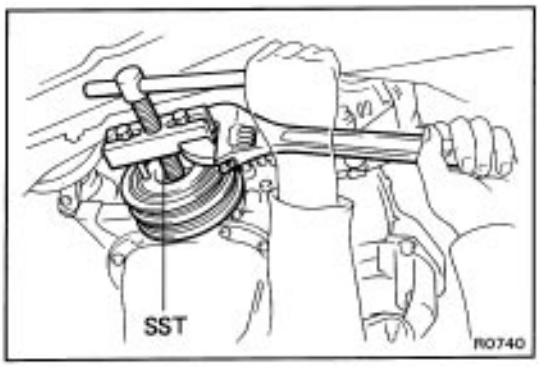

(b) Using SST, remove the pulley.
SST 09213–31021

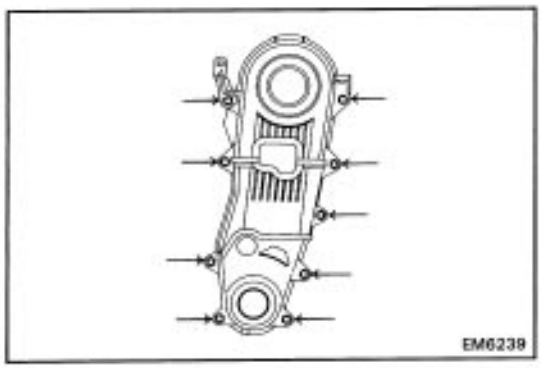

14. REMOVE TIMING BELT COVERS

Remove the nine bolts, engine wire bracket and timing belt covers.

15. REMOVE TIMING BELT GUIDE

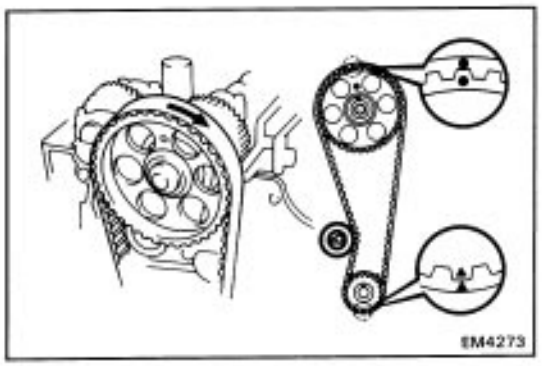

16. REMOVE TIMING BELT AND IDLER PULLEY

HINT: If reusing the timing belt, draw a direction arrow on the belt (in direction of engine revolution), and place matchmarks on the pulleys and belt as shown in the illustration.

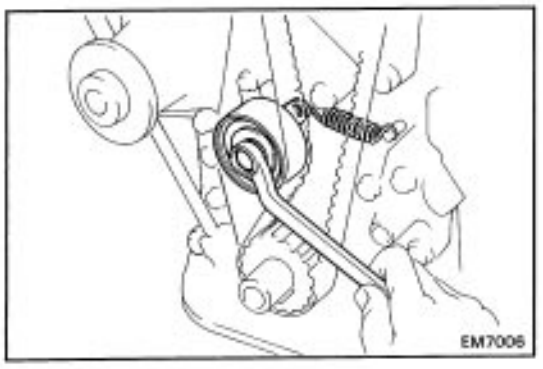

(a) Remove the bolt, idler pulley and tension spring.
(b) Remove the timing belt.

17. REMOVE CRANKSHAFT TIMING PULLEY

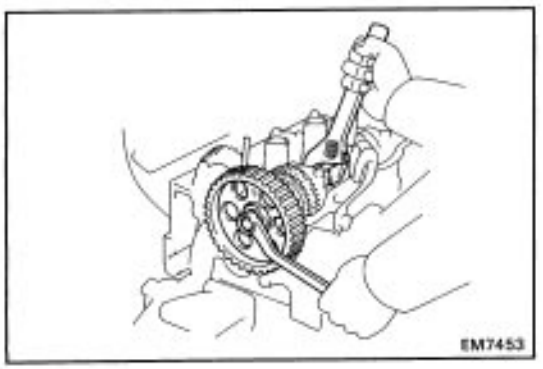

18. REMOVE CAMSHAFT TIMING PULLEY

Hold the hexagonal head wrench portion of the camshaft with a wrench, and remove the bolt and timing pulley.

NOTICE: Be careful not to damage the cylinder head with the wrench.

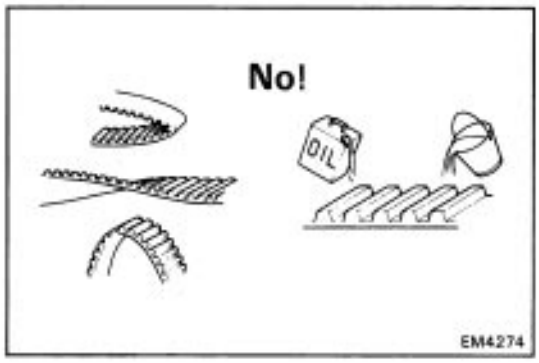

INSPECTION OF TIMING BELT COMPONENTS

1. INSPECT TIMING BELT

NOTICE:

- **Do not bend, twist or turn the timing belt inside out.**
- **Do not allow the timing belt to come into contact with oil, water or steam.**
- **Do not utilize timing belt tension when installing or removing the mount bolt of the camshaft timing pulley.**

If there are any defects as shown in the illustrations, check the following points:

(a) Premature splitting

- Check for proper installation.
- Check the timing cover gasket for damage and proper installation.

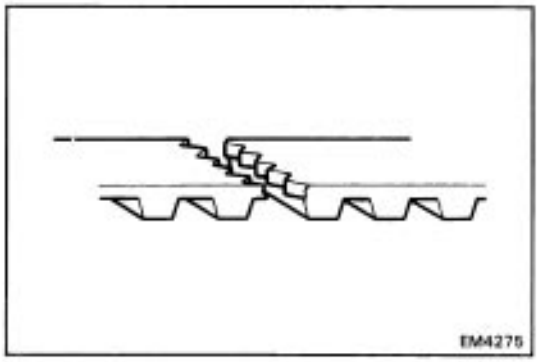

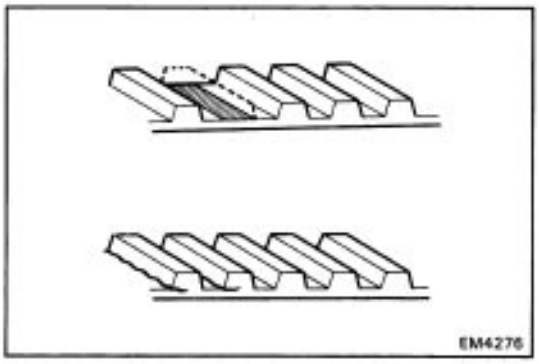

(b) If the belt teeth are cracked or damaged, check to see if either camshaft, water pump is locked.

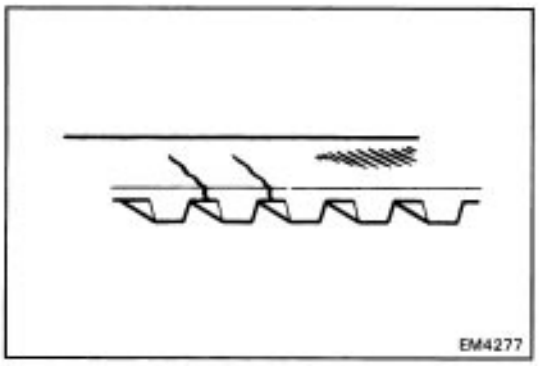

(c) If there is noticeable wear or cracks on the belt face, check to see if there are nicks on the side of the idler pulley lock.

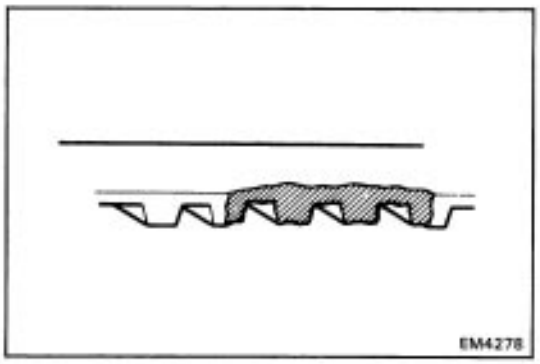

(d) If there is wear or damage on only one side of the belt, check the belt guide and the alignment of each pulley.

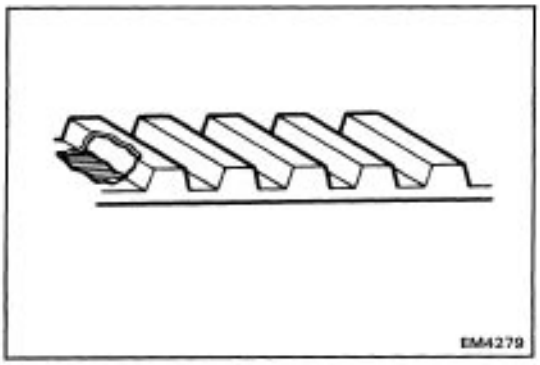

(e) If there is noticeable wear on the belt teeth, check the timing cover for damage and check for correct gasket installation and for foreign material on the pulley teeth.

If necessary, replace the timing belt.

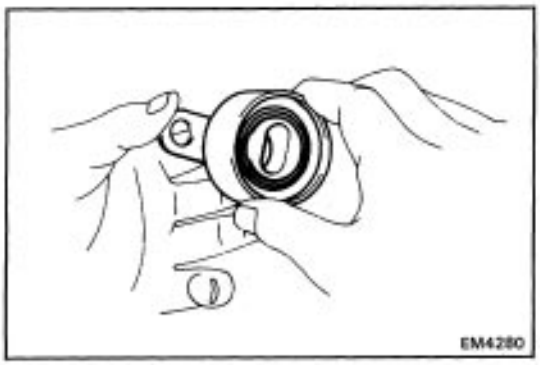

2. INSPECT IDLER PULLEY

Check the turning smoothness of the idler pulley.

If necessary, replace the idler pulley.

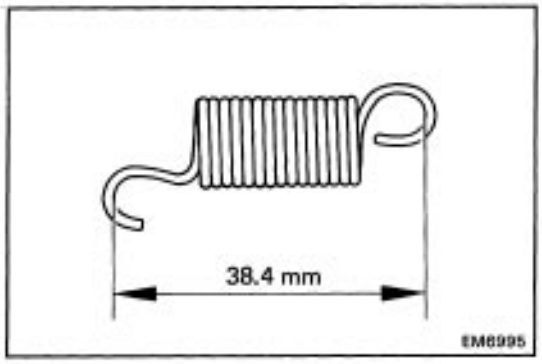

3. INSPECT TENSION SPRING

(a) Measure the free length of the tension spring.

Free length: 38.4 mm (1.512 in.)

If the free length is not as specified, replace the tension spring.

(b) Measure the tension of the tension spring at the specified installed length.

Installed tension:

3.6–4.0 kg (7.9–8.81b,35–39N–m)

at 50.2 mm (1.976 in.)

If the tension is not as specified, replace the tension spring.

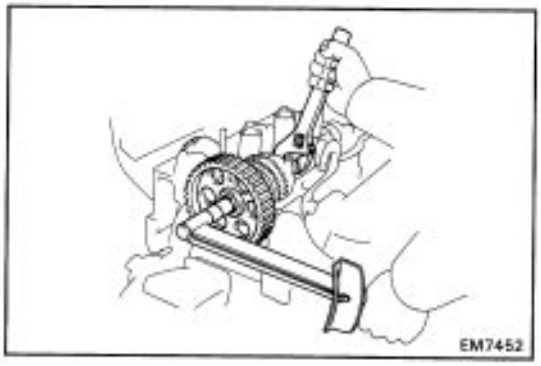

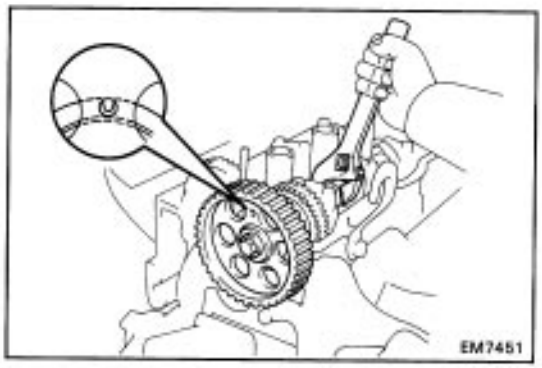

INSTALLATION OF TIMING BELT

(See page EM–30)

1. INSTALL CAMSHAFT TIMING PULLEY

(a) Align the camshaft knock pin with the knock pin groove of the pulley, and slide on the pulley.

(b) Temporarily install the timing pulley bolt.

(c) Hold the hexagonal wrench head portion of the camshaft with a wrench, and tighten the timing pulley bolt.

Torque: 600 kg–cm (43 ft–lb, 59 N–m)

(d) Turn the hexagonal wrench head portion of the camshaft, and align the hole of the camshaft timing pulley with the timing mark of the bearing cap.

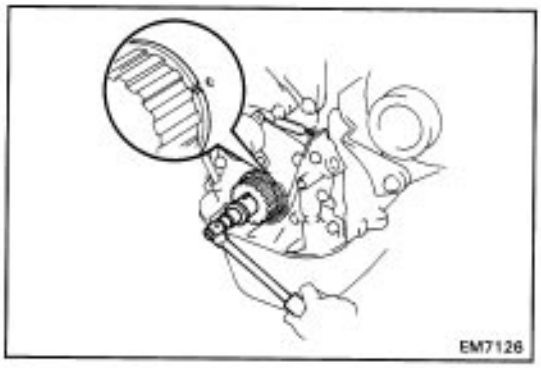

2. INSTALL CRANKSHAFT TIMING PULLEY

(a) Align the pulley set key with the key groove of the pulley.

(b) Slide on the timing pulley, facing the flange side inward.

(c) Using the crankshaft pulley bolt, turn the crankshaft and align the timing marks of the crankshaft timing pulley and oil pump body.

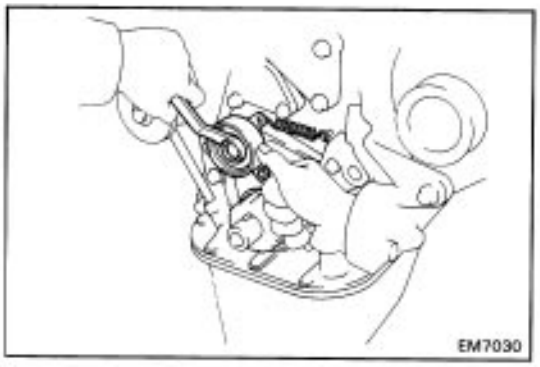

3. TEMPORARILY INSTALL IDLER PULLEY AND TENSION SPRING

(a) Install the idler pulley with the bolt. Do not tighten the bolt yet.

(b) Install the tension spring.

(c) Push the pulley toward the left as far as it will go and tighten the bolt.

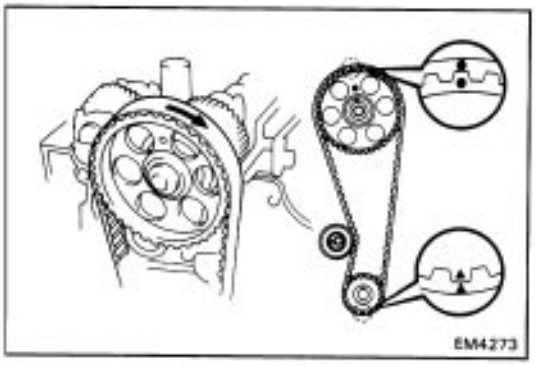

4. INSTALL TIMING BELT

NOTICE: The engine should be cold.

HINT: If reusing the timing belt, align the points marked during removal, and install the belt with the arrow pointing in the direction of engine revolution.

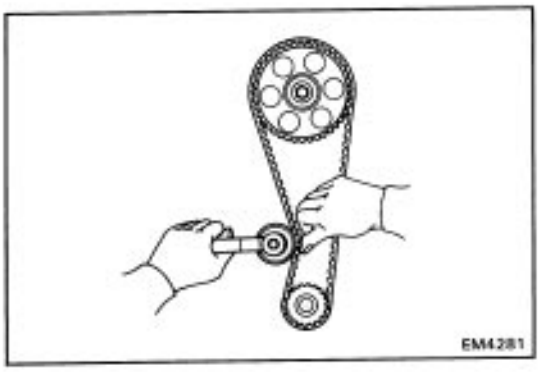

5. CHECK VALVE TIMING AND TIMING BELT TENSION

(a) Loosen the timing belt idler pulley mount bolt.

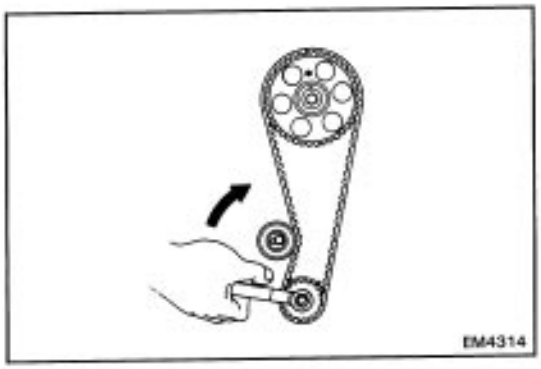

(b) Temporarily install the crank pulley bolt and turn the crankshaft two revolutions from TDC to TDC.

HINT: Always turn the crankshaft clockwise.

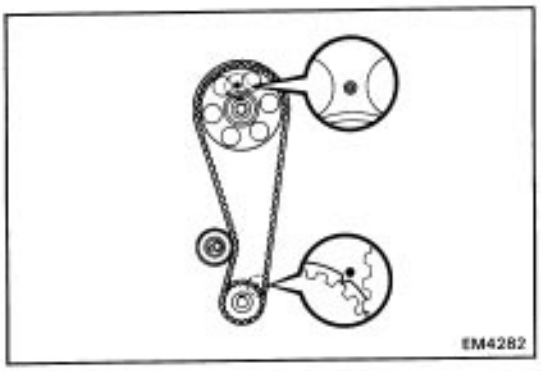

(c) Check the valve timing.

Ensure that each pulley aligns with the marks as shown in the illustration.

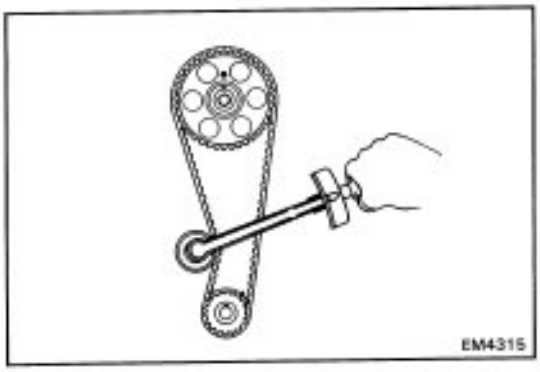

(d) Tighten the timing belt idler pulley mount bolt.

Torque: 375 kg–cm (27 ft–lb, 37 N–m)

(e) Remove the temporarily installed crank pulley bolt.

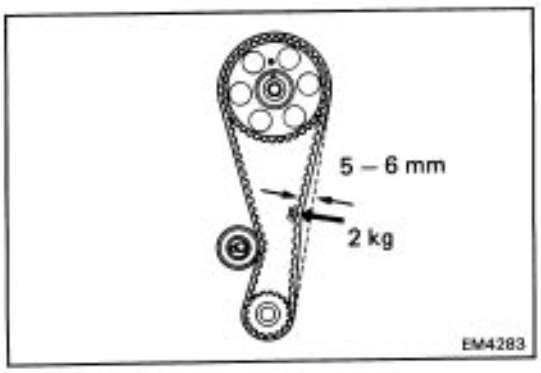

(Reference)

(a) Measure the timing belt deflection as shown in the illustration.

Timing belt deflection: 5 – 6 mm (0.20 – 0.24 in.)
at 2 kg (4.4 lb, 20 N)

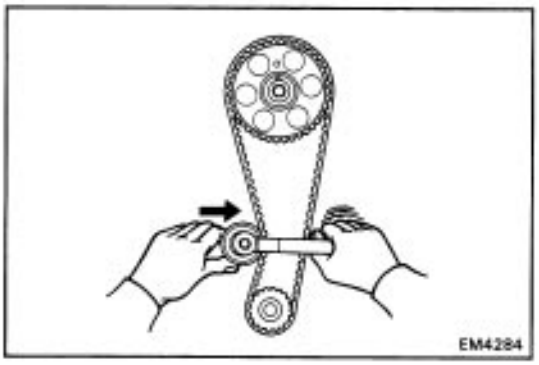

(b) If the measured value is not within standard, readjust with the idler pulley.

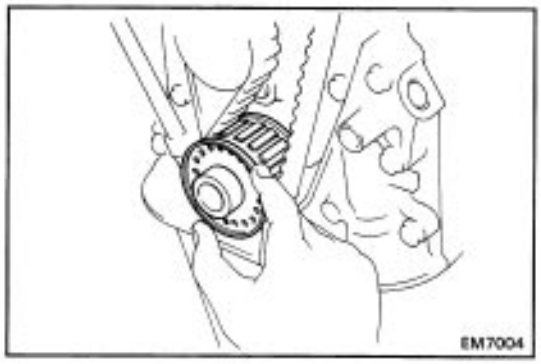

6. INSTALL TIMING BELT GUIDE

Install the guide, facing the cup side outward.

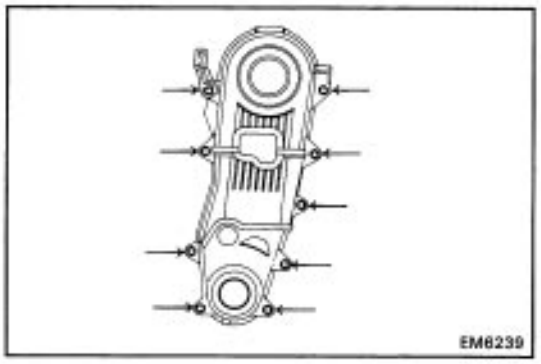

7. INSTALL TIMING BELT COVERS

(a) Install the timing belt cover with the three bolts.

(b) Install the No.2, No.3 timing belt covers and engine wire bracket with the six bolts.

Torque: 75 kg–cm (^5 in–lb, 7.4 N–m)

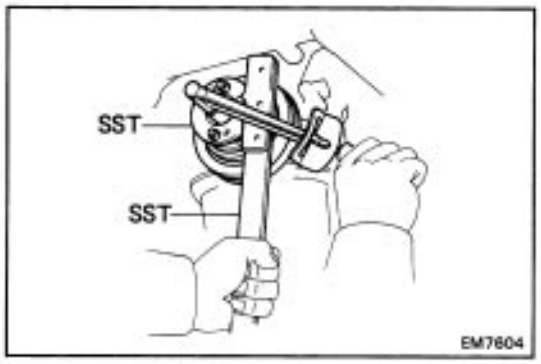

8. INSTALL CRANKSHAFT PULLEY

(a) Align the pulley set key with the key groove of the pulley, slide on the pulley.

(b) Temporarily install the pulley bolt.

(c) Using SST, install the pulley bolt.

SST 09213–14010 and 09330–00021

Torque: 1,200 kg–cm (87 ft–lb, 118 N–m)

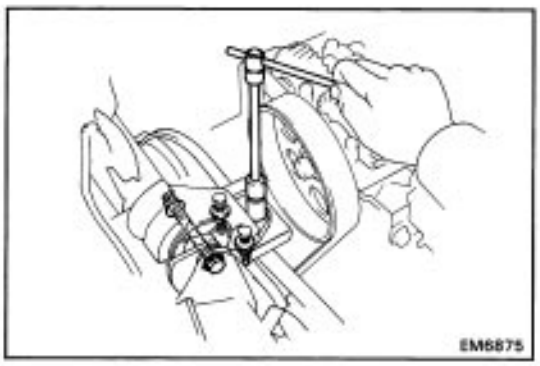

9. TEMPORARILY INSTALL WATER PUMP PULLEY

10. INSTALL RH ENGINE MOUNTING INSULATOR

(a) Install the RH mounting insulator to the engine mounting bracket with the two nuts and bolt.

Align the RH mounting insulator with the body bracket and install the mounting through bolt and nut.

Torque: Bolt 650 kg–cm (47 ft–lb, 64 N–m)
Nut 530 kg–cm (38 ft–lb, 52 N–m)
Through bolt 890 kg–cm (64 ft–lb, 87 N–m)

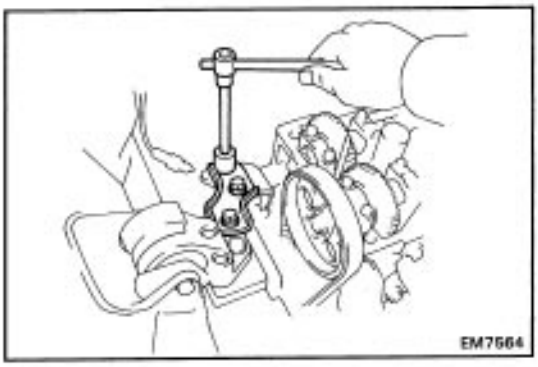

(b) Install the RH mounting stay with the three bolts.
Torque: 430 kg–cm (31 ft–lb, 42 N–m)
(c) Remove the jack.

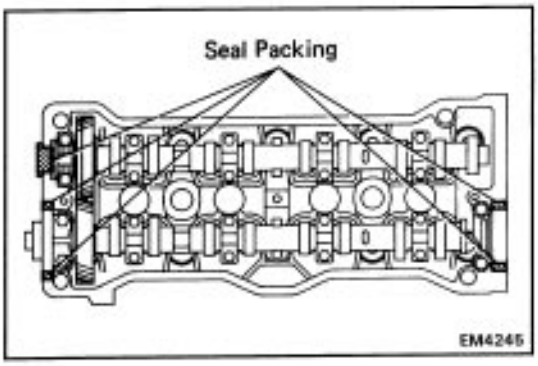

11. INSTALL CYLINDER HEAD COVER
(a) Apply seal packing as shown in the illustration.
Seal packing: Part No. 08826–00080 or equivalent
HINT: Clean the indicated portions by removing the original sealant before recoating.

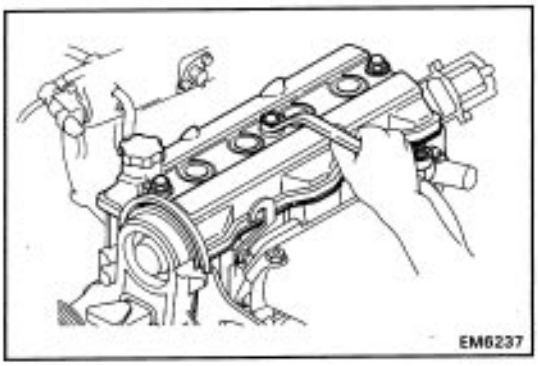

(b) Install the cylinder head cover with the three grommet and bolts.
(c) Install the PCV hoses.

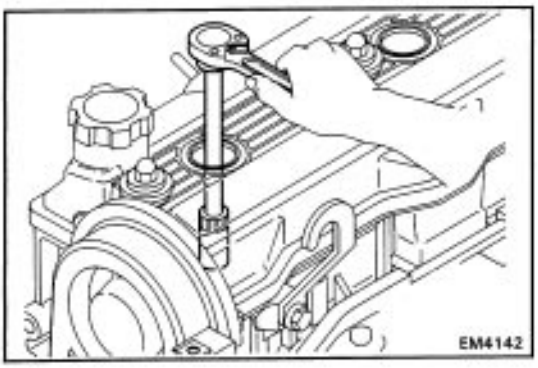

12. INSTALL SPARK PLUG
(a) Using a plug wrench (16 mm), install the spark plugs.
Torque: 180 kg–cm (13 ft–lb, 18 N–m)
(b) Connect the high–tension cords to spark plugs.

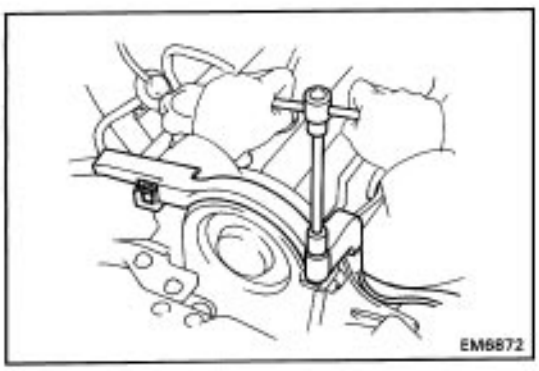

13. CONNECT ENGINE WIRE TO NO.3 TIMING BELT COVER
(a) Connect the engine wire to the timing belt cover, and connect the wire clamp to the wire bracket.
(b) Install the bolt.
(c) Connect the following connectors and wire:
- Alternator connector
- Alternator wire
- Oil pressure switch connector
- (with A/C)
  Compressor connector

14. TEMPORARILY INSTALL WATER PUMP PULLEY

Install the water pump pulley and partially tighten the four bolts.

15. (wl PS)

INSTALL PS PUMP DRIVE BELT

16. (with A/C)

INSTALL A/C COMPRESSOR DRIVE BELT

17. INSTALL ALTERNATOR DRIVE BELT

18. ADJUST DRIVE BELTS

Using a belt tension gauge, check the drive belt tension.

Belt tension gauge:

Nippondenso BTG–20 (95506–00020) or
Borroughs No. BT–33–73F

Drive belt tension:

Alternator	**New belt 160 ± 20 lb**
	Used belt 130 ± 20 lb
PS	**New belt 125 ± 25 lb**
	Used belt 80 ± 20 lb
A/C	**New belt 160 ± 20 lb**
	Used belt 100 ± 20 lb

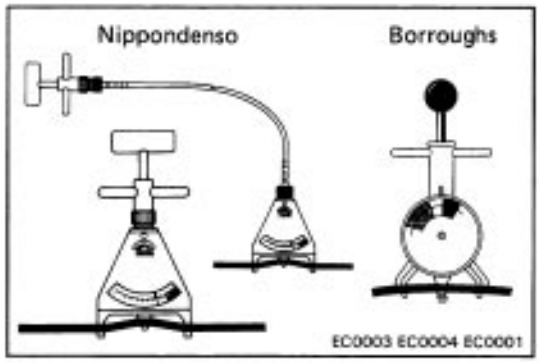

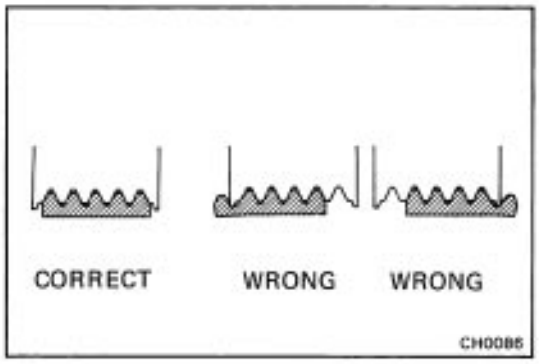

If necessary, adjust the drive belt tension.

HINT:

- ”New belt” refers to a belt which has been used less than 5 minutes on a running engine.
- ”Used belt” refers to a belt which has been used on a running engine for 5 minutes or more.
- After installing the drive belt, check that it fits properly in the ribbed grooves. Check with your hand to confirm that the belt has not slipped out of the groove at the bottom of the crank pulley.
- After installing a new belt, run the engine for about 5 minutes and then recheck the tension.

19. TIGHTEN WATER PUMP PULLEY BOLTS

20. INSTALL WASHER TANK

21. INSTALL RH ENGINE UNDER COVER

22. INSTALL RH FRONT WHEEL

TIMING BELT (4A–GE)

COMPONENTS

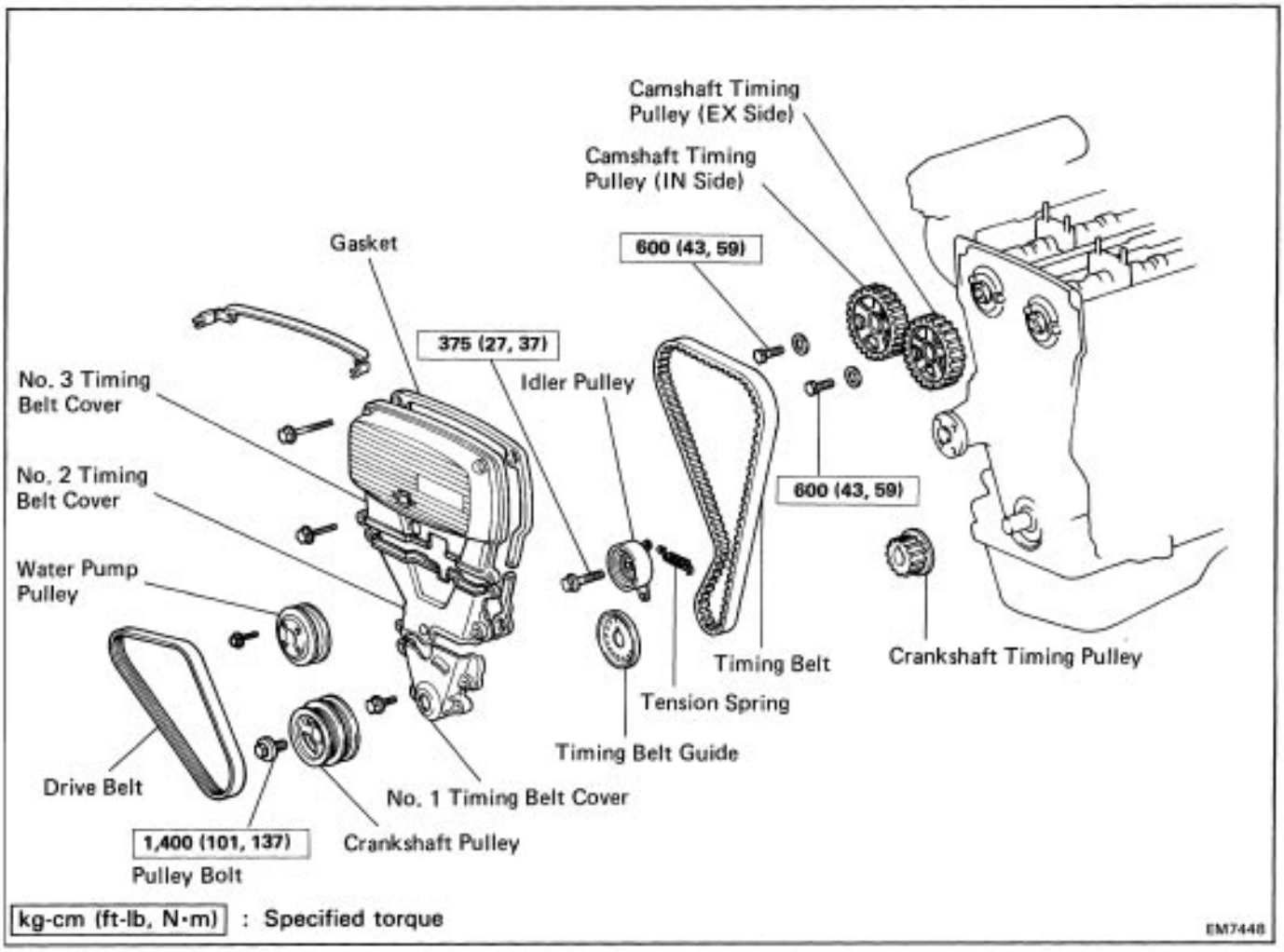

REMOVAL OF TIMING BELT

1. REMOVE RH FRONT WHEEL

2. REMOVE RH ENGINE UNDER COVER

3. DRAIN ENGINE COOLANT

4. REMOVE WASHER TANK

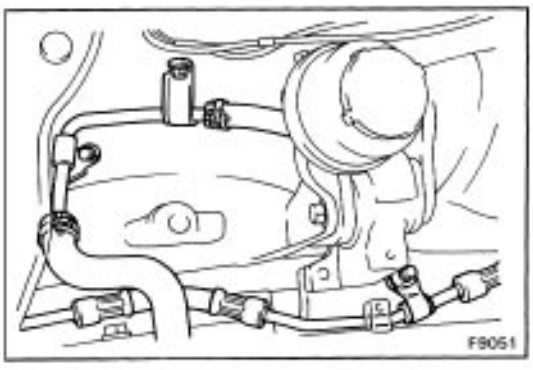

5. (w/ CRUISE CONTROL)

REMOVE CRUISE CONTROL ACTUATOR

(a) (w/ PS)

Remove the bolt and PS reservoir tank

(b) (w/ PS)

Remove the three pipe clamps.



(c) Remove the three bolts and actuator with the bracket.

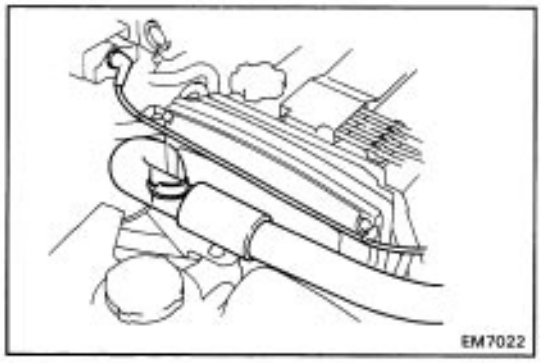

6. REMOVE RADIATOR INLET HOSE AND HIGH–TENSION CORD

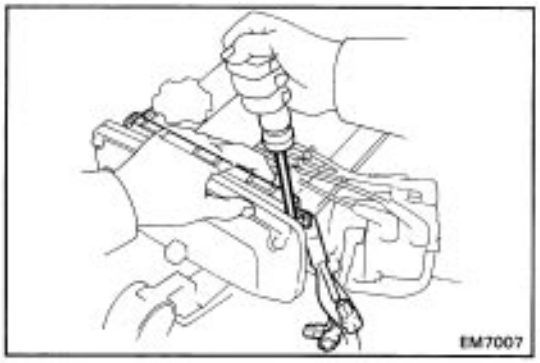

7. DISCONNECT ENGINE WIRE FROM NO.4 TIMING BELT COVER

(a) Disconnect the following connectors:

- Distributor wire connectors
- Oil pressure sender gauge connector
- (with A/C)
  Compressor connector

(b) Disconnect the engine wire from the timing belt cover.

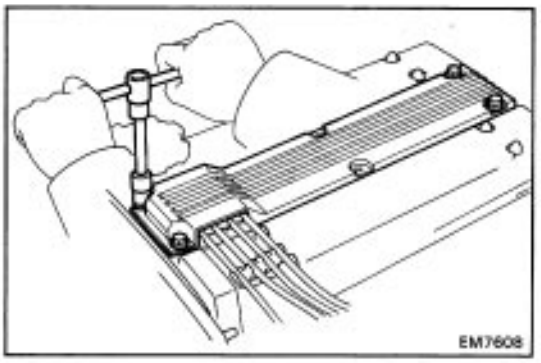

8. REMOVE SPARK PLUGS

(a) Remove the bolts and plug cord cover.

(b) Disconnect the high–tension cords from the spark plugs.

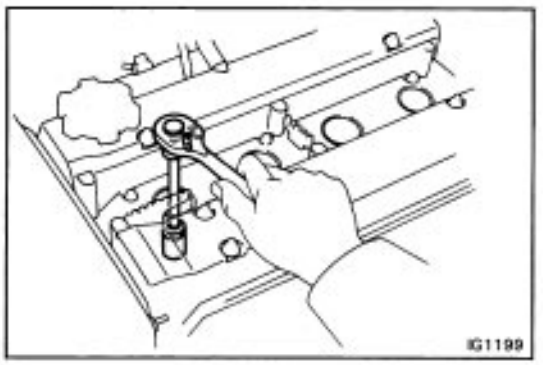

(c) Using a plug wrench (16 mm), remove the spark plugs.

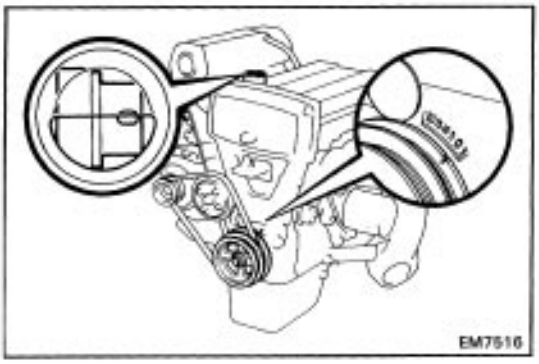

9. SET NO. 1 CYLINDER TO TDC/COMPRESSION

(a) Turn the crankshaft pulley and align its groove with the timing mark ”O” of the No. 1 timing belt cover.

(b) Remove the oil filler cap and check that you can see the cavity in the camshaft.

If necessary, turn the crankshaft pulley one complete revolution (360°).

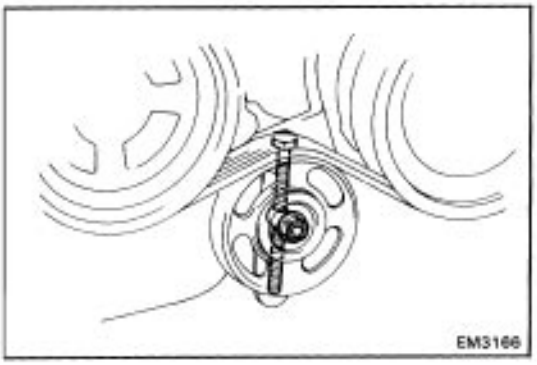

10. (w/ PS AND/OR with A/C)
REMOVE PS AND/OR A/C DRIVE BELT

(a) Loosen the drive belt adjusting set bolt.

(b) Loosen the adjusting bolt and remove drive belt.

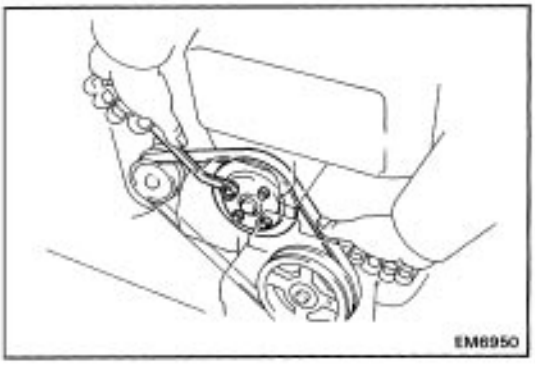

11. LOOSEN WATER PUMP PULLEY BOLTS AND REMOVE ALTERNATOR DRIVE BELT

(a) Stretch the belt tight and loosen the water pump pulley bolts.

(b) Loosen the pivot nut and adjusting bolt, and remove the drive belt.

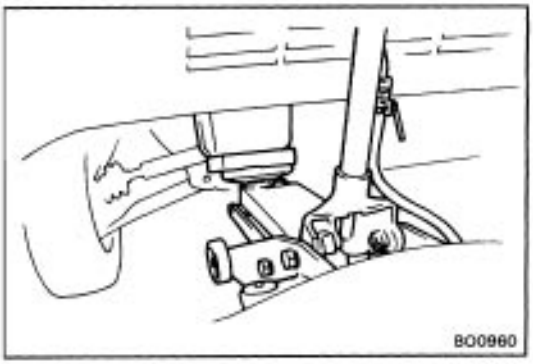

12. REMOVE RH ENGINE MOUNTING INSULATOR

(a) Set the jack to the engine.

HINT: Place a wooden block between the jack and engine.

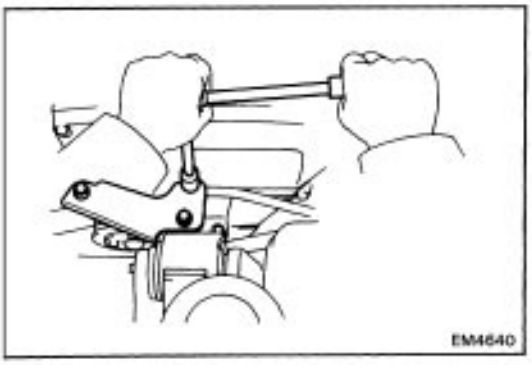

(b) Remove the three bolts and RH mounting stay.

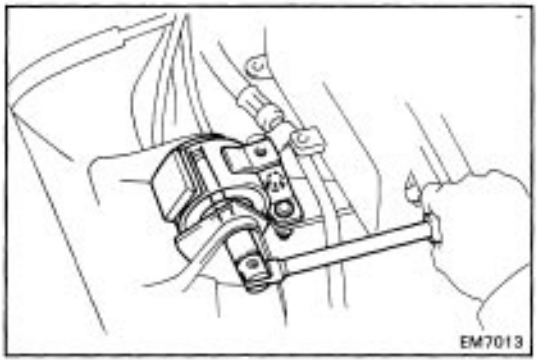

(c) Remove the two nuts, mounting through bolt and RH engine mounting insulator.

13. REMOVE WATER PUMP PULLEY

Remove the set bolts and water pump pulley.

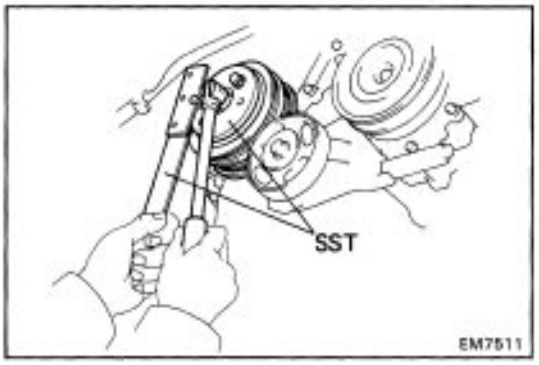

14. REMOVE CRANKSHAFT PULLEY

(a) Using SST to hold the crankshaft pulley, loosen the pulley bolt.

SST 09213–70010 and 09330–00021

(b) Remove SST and pulley bolt.

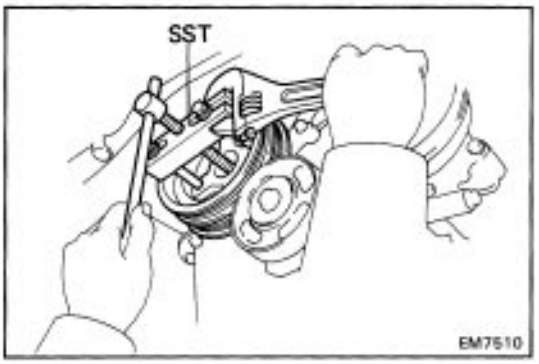

(c) Using SST, remove the crankshaft pulley.

SST 09213–31021

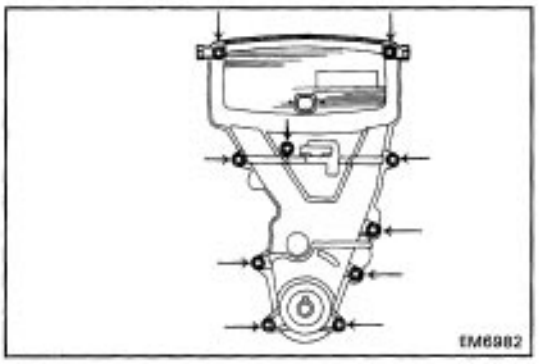

15. REMOVE TIMING BELT COVERS

Remove the ten bolts, cord support plate and timing belt covers and gaskets.

16. REMOVE TIMING BELT GUIDE

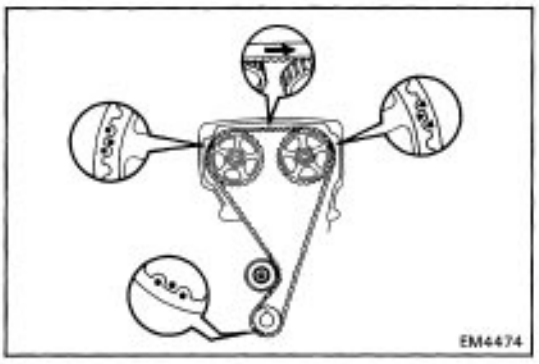

17. REMOVE TIMING BELT AND IDLER PULLEY

HINT: If reusing the timing belt, draw a direction arrow on the belt (in direction of engine revolution), and place matchmarks on the pulleys and belt as shown.

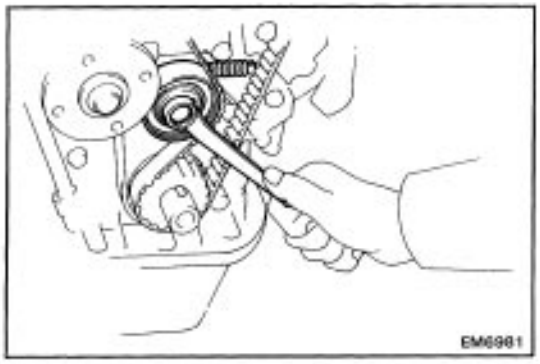

(a) Remove the bolt, idle pulley and tension spring.
(b) Remove the timing belt.

18. REMOVE CRANKSHAFT TIMING PULLEY

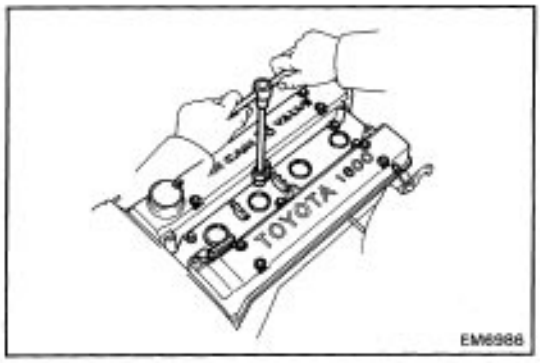

19. REMOVE CYLINDER HEAD COVERS

(a) Remove the PCV hose.
(b) Remove the center cover with gasket and the EGR modulator bracket.
(c) Remove cap nuts, seals and head covers with gaskets.

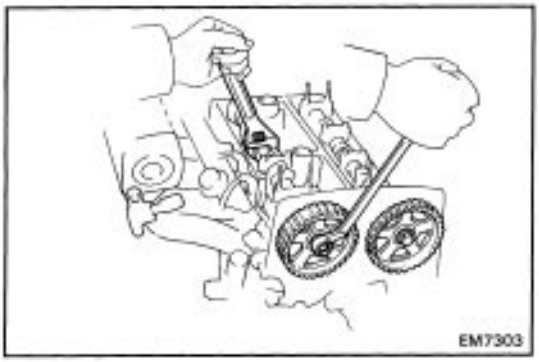

20. REMOVE CAMSHAFT TIMING PULLEYS

Secure the camshaft and remove the camshaft timing pulley bolt.

NOTICE: Be careful not to damage the cylinder head with the wrench.

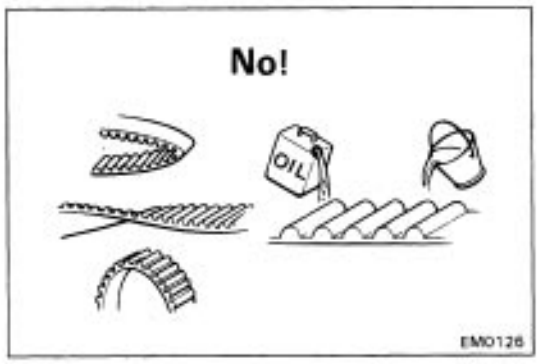

INSPECTION OF TIMING BELT COMPONENTS

1. INSPECT TIMING BELT

NOTICE:

- **Do not bend, twist or turn the timing belt inside out.**
- **Do not allow the timing belt to come into contact with oil, water or steam.**
- **Do not utilize timing belt tension when installing or removing the mount bolt of the camshaft timing pulley.**

If there are defects as shown in the illustrations, check the following points:

(a) Premature splitting

- Check for proper installation.
- Check the timing cover gasket for damage and proper installation.

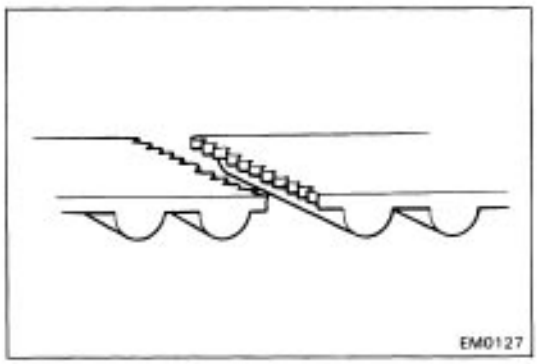

(b) If the belt teeth are cracked or damaged, check to see if either the camshaft or water pump is locked.

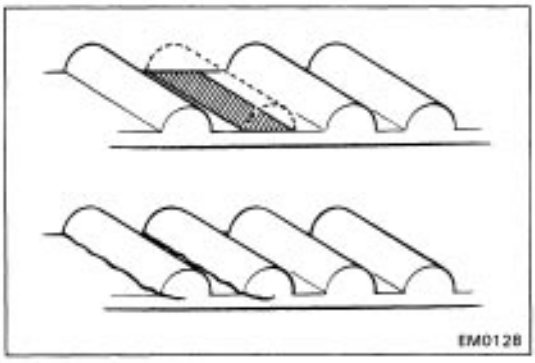

(c) If there are cracks or noticeable wear on the belt face, check to see if there are nicks on the side of the idler pulley lock.

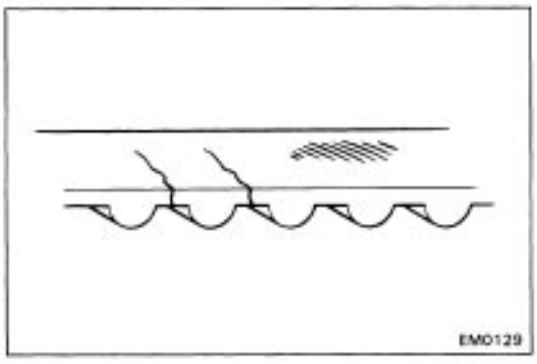

(d) If there is wear or damage on only one side of the belt, check the belt guide and the alignment of each pulley.

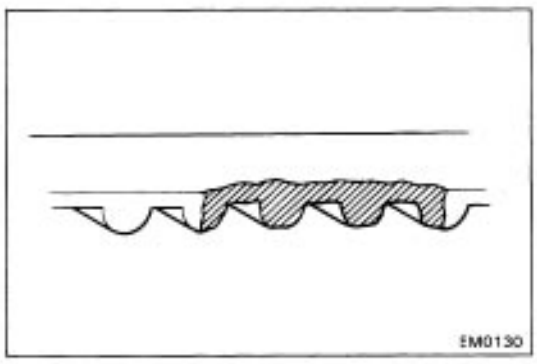

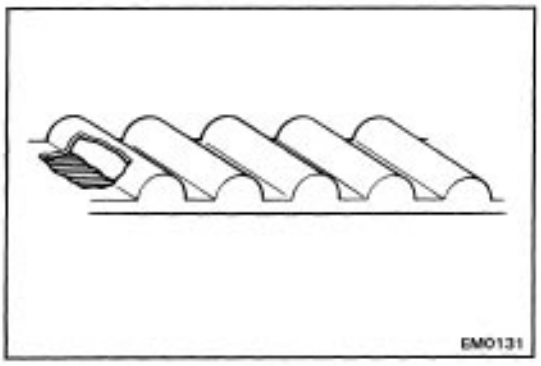

(e) If there is noticeable wear on the belt teeth, check the timing cover for damage and check for correct gasket installation. Check for foreign material on the pulley teeth.

If necessary, replace the timing belt.

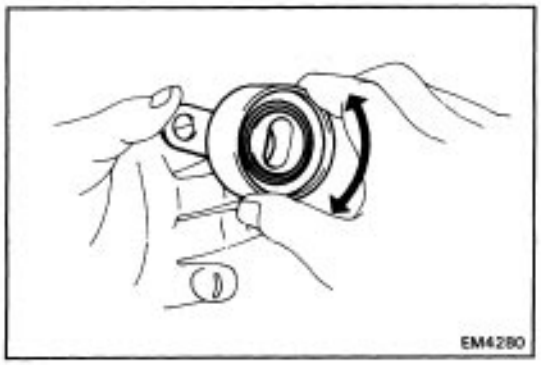

2. INSPECT IDLER PULLEY

Check the turning smoothness of the idler pulley.

If necessary, replace the idler pulley.

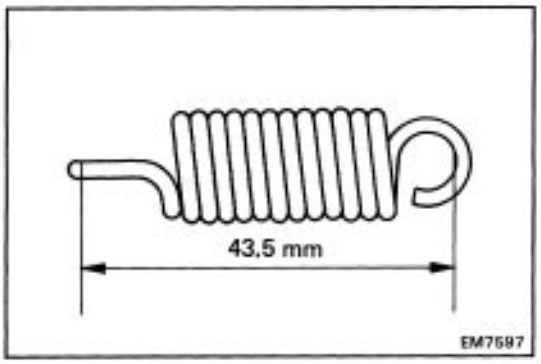

3. INSPECT TENSION SPRING

(a) Measure the free length of the tension spring.

Free length: 43.5 mm (1.713 in.)

If the free length is not as specified, replace the tension spring.

(b) Measure the tension of the tension spring at the specified installed length.

Installed tension: 9.47 – 10.47 kg
(20.9 – 23.1 1b, 93 – 103 N)
at 50.2 mm (1.976 in.)

If the tension is not as specified, replace the tension spring.

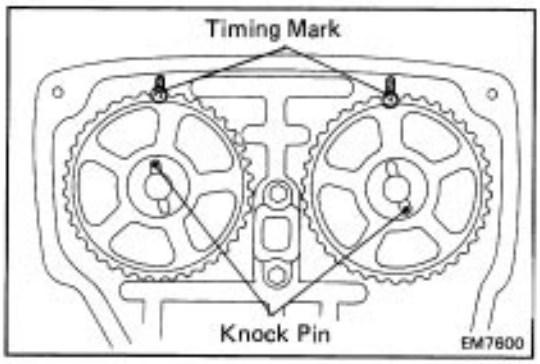

INSTALLATION OF TIMING BELT

(See page EM–41)

1. INSTALL CAMSHAFT TIMING PULLEYS

(a) Position the knock pin of the camshafts as shown in the illustration.

(b) Align the camshaft knock pin with the knock pin groove of the pulley, and slide the pulley, facing the timing mark upward.

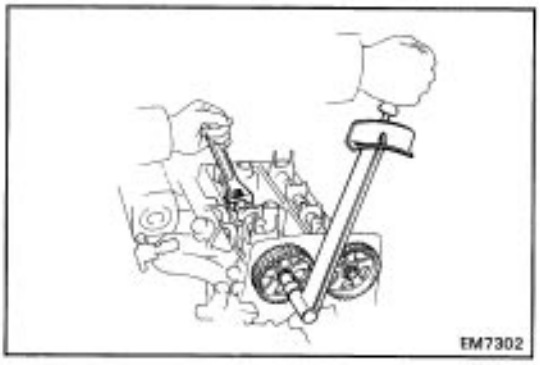

(c) Secure the hexagonal wrench head portion of the camshaft, and install the plate washer and bolt.

Torque: 600 kg–cm (43 ft–lb, 59 N–m)

NOTICE:

- **Remove any oil or water on the camshaft timing pulley and keep it clean.**
- **Be careful not to damage the cylinder head with the wrench.**

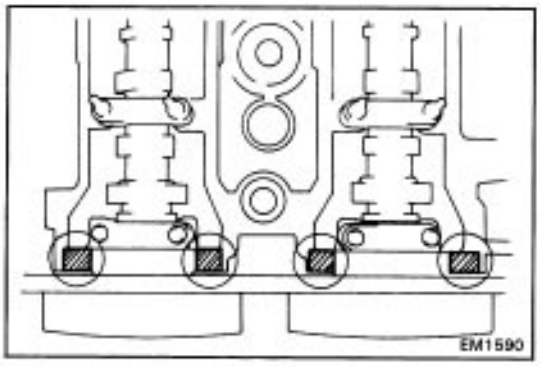

2. INSTALL CYLINDER HEAD COVERS

(a) Apply seal packing to the cylinder head as shown in the figure.

Seal packing: Part No. 08826–00080 or equivalent

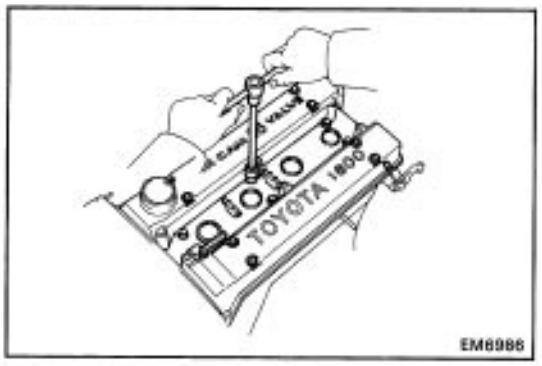

(b) Install the intake and exhaust head covers with the gaskets.

(c) Install the center cover with the gasket.

(d) Install the PCV hose.



3. INSTALL CRANKSHAFT TIMING PULLEY

Install the crankshaft timing pulley and align the TDC marks on the oil pump body and crankshaft timing pulley.

HINT: Remove any oil or water on the crankshaft timing pulley and keep it clean.

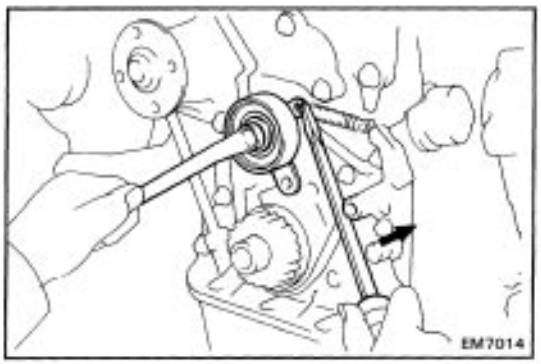

4. TEMPORARILY INSTALL IDLER PULLEY AND TENSION SPRING

(a) Install the pulley with the bolt. Do not tighten the bolt yet.

(b) Install the tension spring.

(c) Pry the pulley toward the left as far as it will go and tighten the bolt.

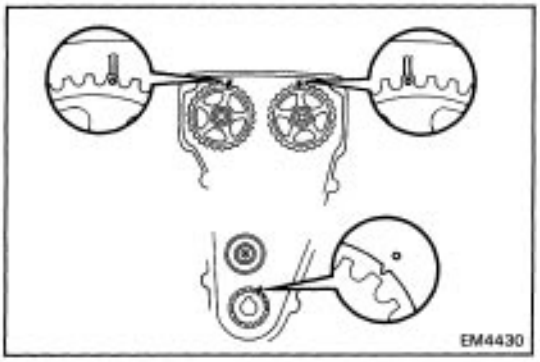

5. SET NO. 1 CYLINDER TO TDC/COMPRESSION

(a) Align the timing marks of the camshaft timing pulleys and No.4 timing belt cover by turning the camshafts.

(b) Align the timing marks of the crankshaft timing pulley and oil pump body by turning the crankshaft.

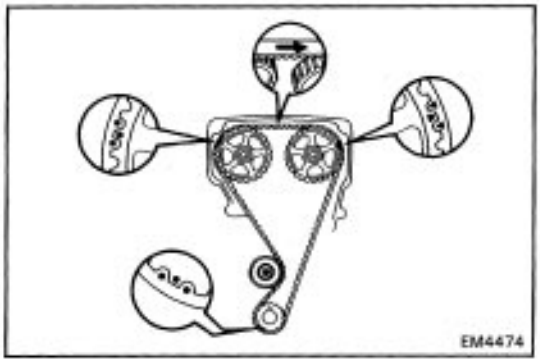

6. INSTALL TIMING BELT

NOTICE: The engine should be cold.

HINT: If reusing the timing belt, align the points marked during removal, and install the belt with the arrow pointing in the direction of engine revolution.

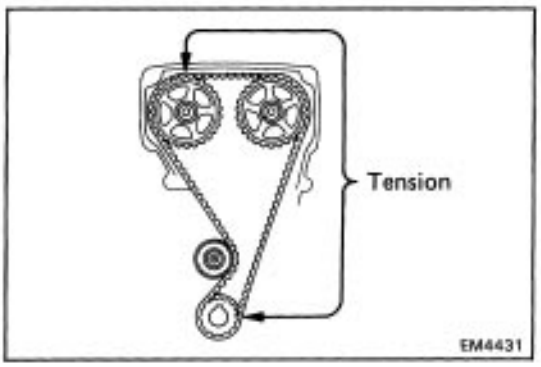

Install the timing belt, insuring the tension between the intake camshaft and crankshaft timing pulleys.

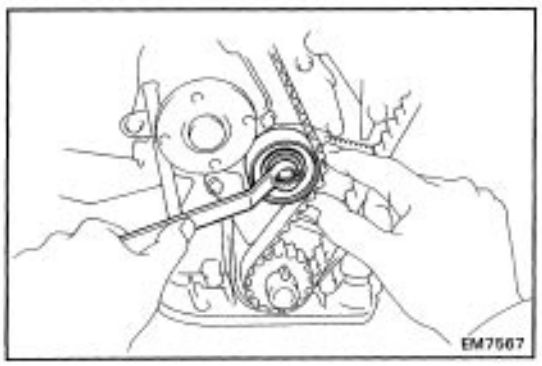

7. CHECK VALVE TIMING AND TIMING BELT DEFLECTION

(a) Slowly loosen the idler pulley bolt.

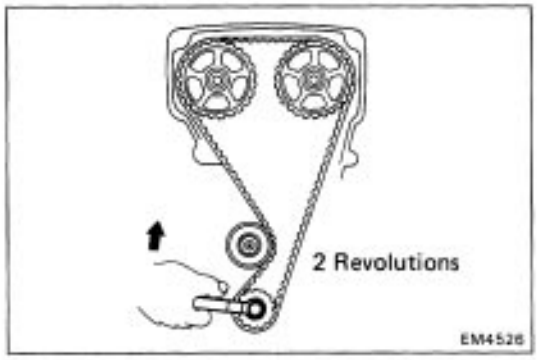

(b) Temporarily install the crankshaft pulley bolt, and turn the crankshaft pulley two revolutions from TDC to TDC.

HINT: Always turn the crankshaft clockwise.

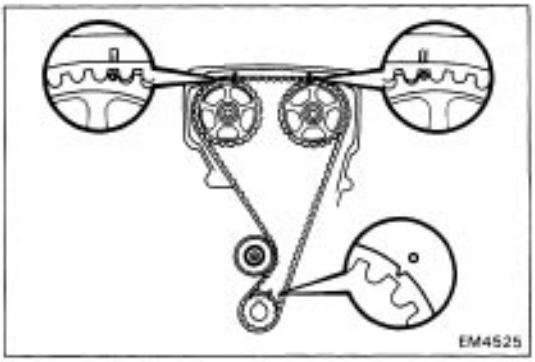

(c) Check that each pulley aligns with the timing marks as shown in the illustration.

If the marks do not align, remove the timing belt and reinstall it.

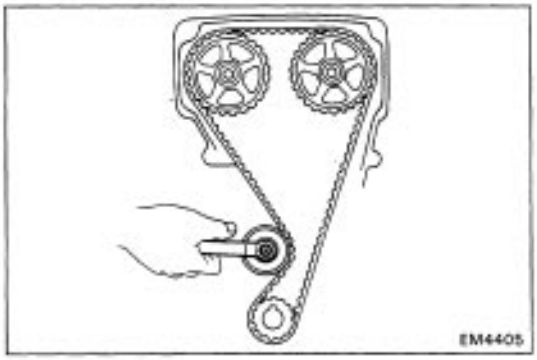

(d) Torque the idler pulley bolt.

Torque: 375 kg–cm (27 ft–lb, 37 N–m)

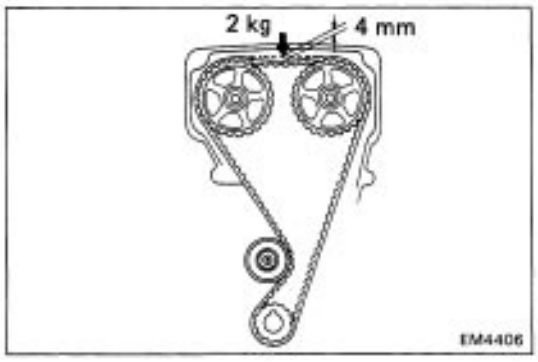

(e) Check that there is belt deflection at the position indicated in the illustration.

Deflection: 4 mm (0.16 in.)
at 2 kg (4.4 lb, 20 N)

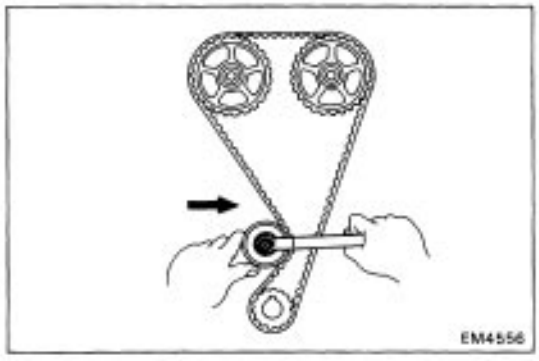

If the deflection is not as specified, adjust with the idler pulley.

(f) Remove the temporarily installed crankshaft pulley bolt.

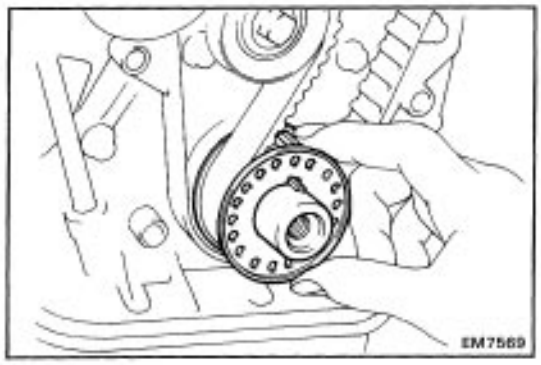

8. INSTALL TIMING BELT GUIDE

Install the guide, facing the cup side outward.

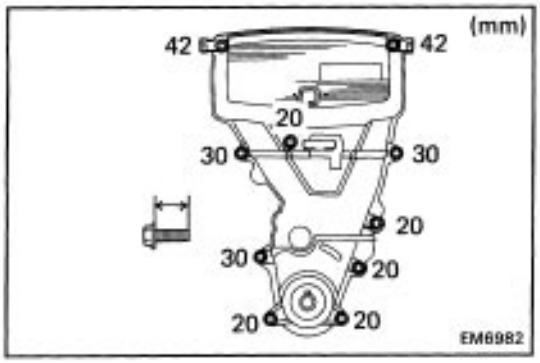

9. INSTALL TIMING BELT COVERS

(a) Install the gaskets to the belt covers.

(b) Install the No.1, No.2, No.3 belt cover and support plate with the ten bolts.

HINT: Each bolt length is indicated in the illustration.

10. INSTALL CRANKSHAFT PULLEY

(a) Align the pulley set key with the key groove of the pulley, slide the pulley.

(b) Using SST, install and torque the the bolt.

SST 09213–70010 and 09330–00021

Torque: 1,400 kg–cm (101 ft–lb, 137 N–m)

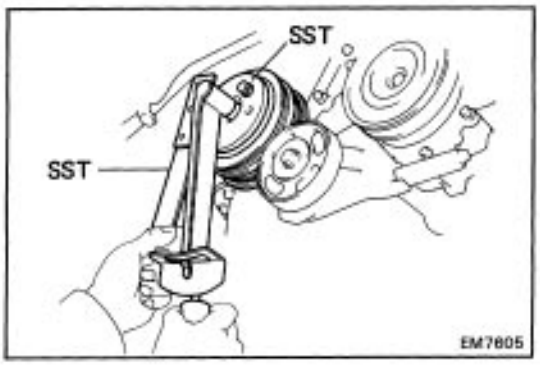

11. TEMPORARILY INSTALL WATER PUMP PULLEY

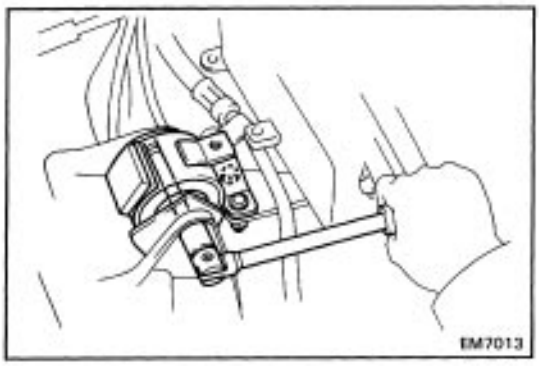

12. INSTALL RH ENGINE MOUNTING INSULATOR

(a) Install the RH engine mounting insulator to the engine with two nuts.

Align the RH mounting insulator into the bracket and install the mounting through bolt.

Torque: Nut 530 kg–cm (38 ft–lb, 52 N–m)
Through bolt 890 kg–cm (64 ft–lb, 87 N –m)

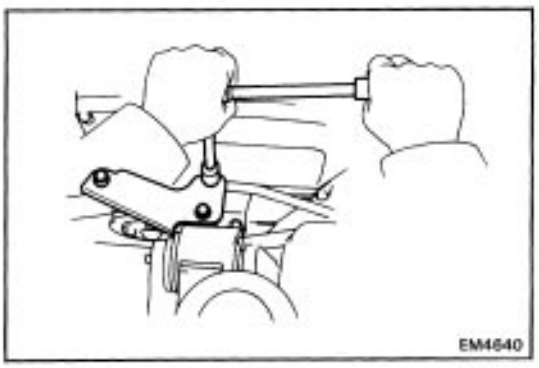

(b) Install the RH mounting stay and three bolts.

Torque: 430 kg–cm (31 ft–lb, 42 N–m)

(c) Remove the jack.

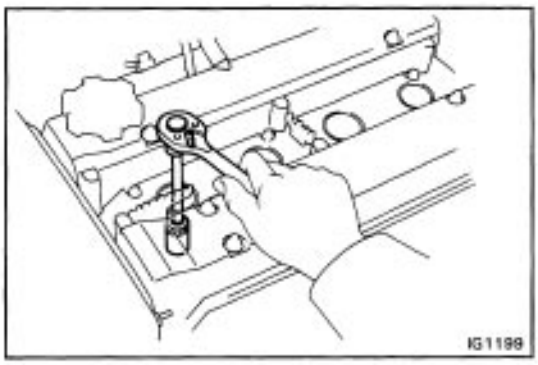

13. INSTALL SPARK PLUGS

(a) Using a plug wrench (16 mm), install the spark plugs.
Torque: 180 kg–cm (13 ft–lb, 18 N–m)

(b) Connect the high–tension cords to the spark plugs.

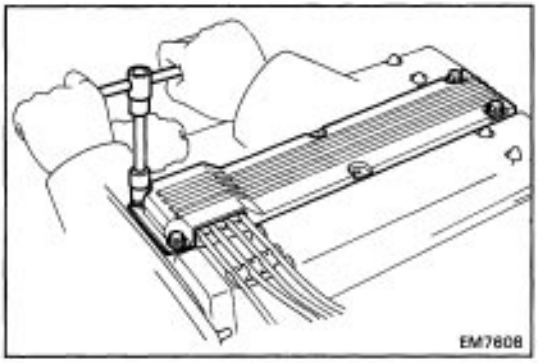

(c) Install the plug cord cover with the bolts.

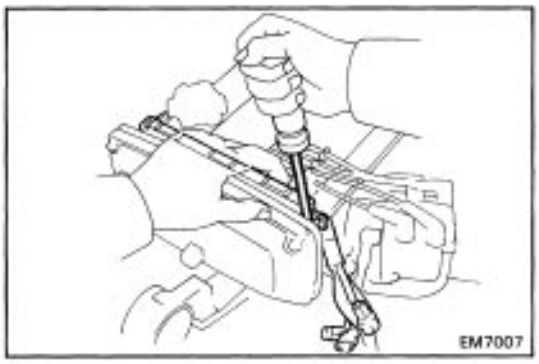

14. CONNECT ENGINE WIRE TO NO.4 TIMING BELT COVER

(a) Connect the engine wire to the timing belt cover.

(b) Connect the following connectors:

- Distributor wire connectors
- Oil pressure sender gauge connector
- (with A/C)
  Compressor connector

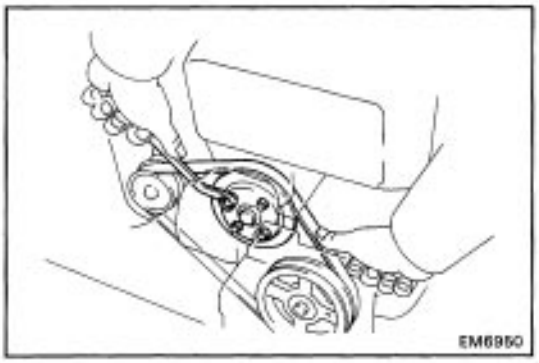

15. INSTALL ALTERNATOR DRIVE BELT AND TIGHTEN WATER PUMP PULLEY BOLTS

(a) Place the drive bolt on the each pulley.

(b) Stretch the belt tight and tighten the four water pump pulley bolts.

16. (w/ PS AND/OR with A/C)
INSTALL PS AND/OR A/C DRIVE BELT

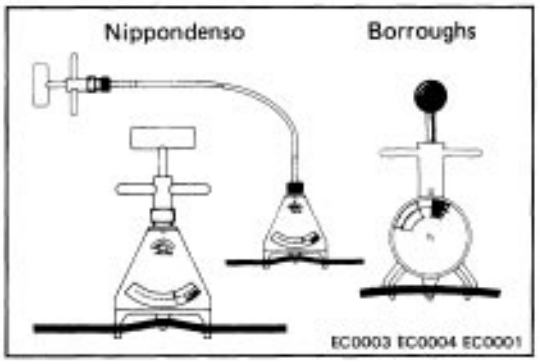

17. ADJUST DRIVE BELTS

Using a belt tension gauge, adjust the drive belt tension.

Belt tension gauge:
Nippondenso BTG–20 (95506–00020) or
Borroughs No. BT–33–73F

Drive belt tension:

Alternator	**New belt 175 ± 5 lb**
	Used belt 115 20 lb
PS and/or A/C	**New belt 175 ± 5 lb**
	Used belt 115 ± 20 lb

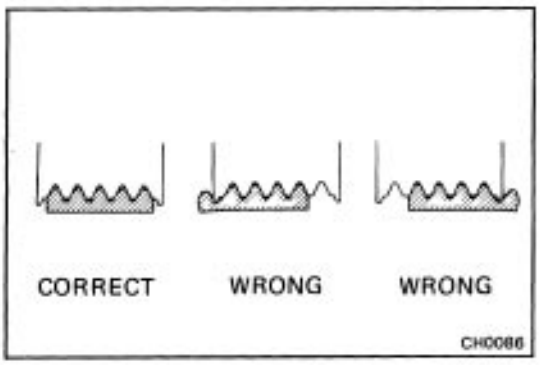

HINT:

- ”New belt” refers to a belt which has been used less than 5 minutes on a running engine.
- ”Used belt” refers to a belt which has been used on a running engine for 5 minutes or more.
- After installing the drive belt, check that it fits properly in the ribbed grooves.

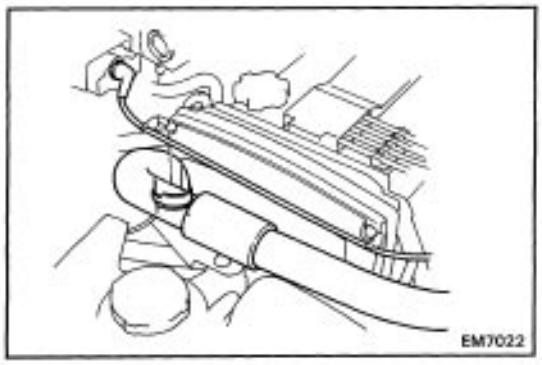

18. INSTALL RADIATOR INLET HOSE AND HIGH–TENSION CORD

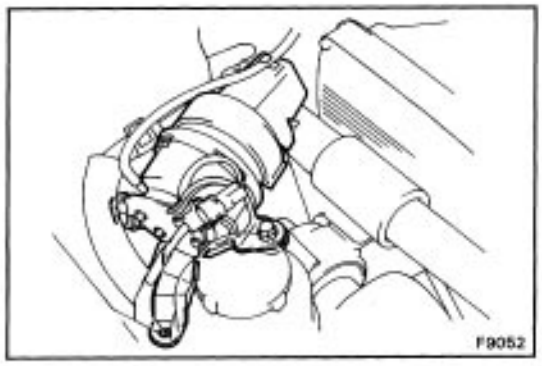

19. (w/ CRUISE CONTROL)
INSTALL CRUISE CONTROL ACTUATOR
(a) Install the actuator with the bracket and three bolts.

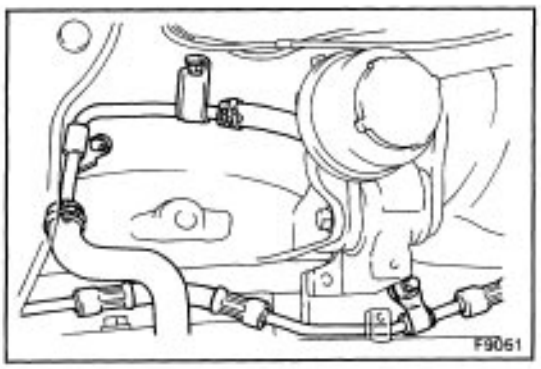

(b) (w/ PS)
Install the three pipe clamps with the bolts.
(c) (w/ PS)
Install the PS reservoir tank with the bolt.

20. INSTALL WASHER TANK
21. REFILL ENGINE COOLANT (See page CO–5)
22. START ENGINE AND CHECK FOR LEAKAGE
23. INSTALL ENGINE RH UNDER COVER
24. INSTALL RH FRONT WHEEL

CYLINDER HEAD (4A–FE)

COMPONENTS

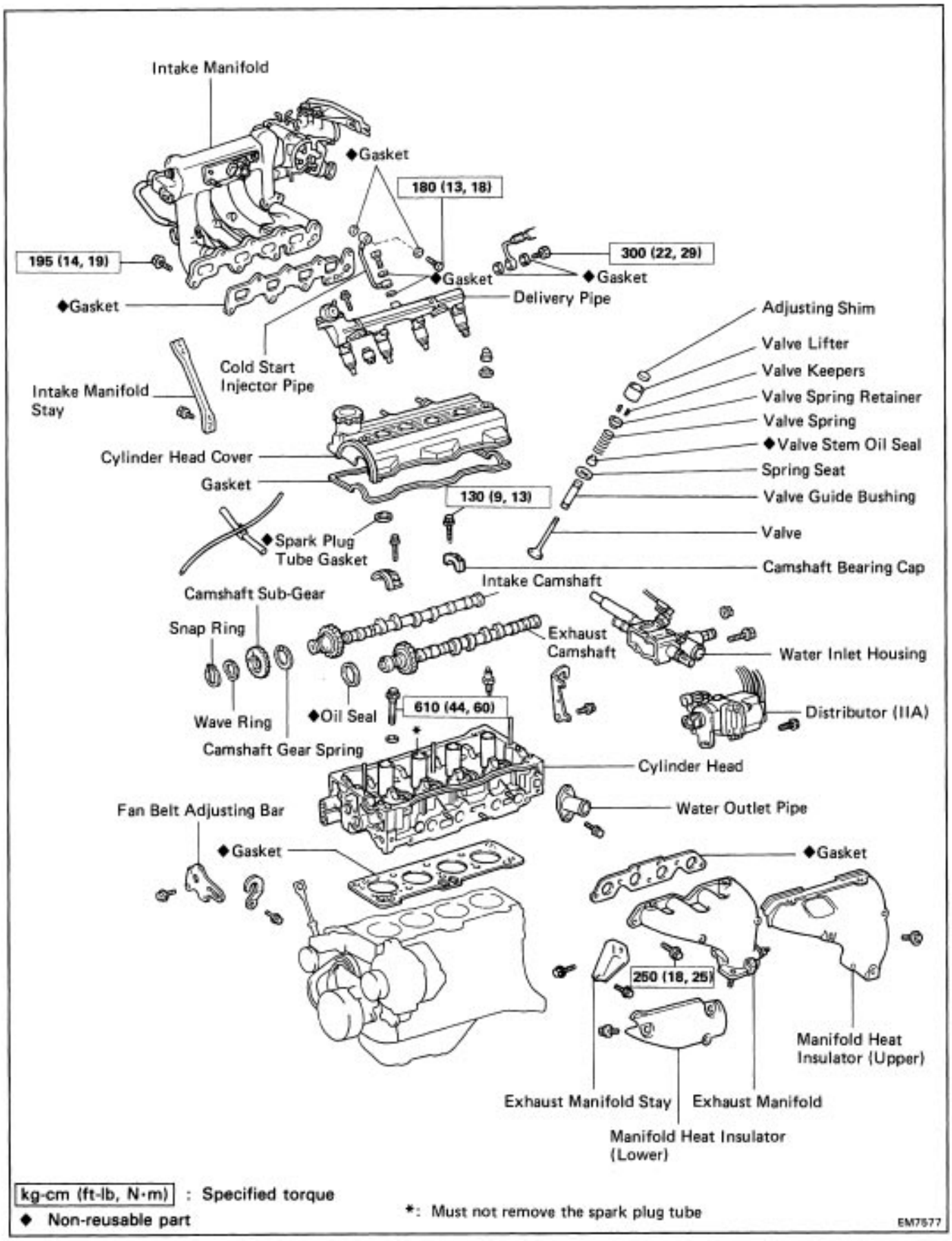

REMOVAL OF CYLINDER HEAD

(See page EM–54)

1. DISCONNECT CABLE FROM NEGATIVE TERMINAL OF BATTERY

2. DRAIN ENGINE COOLANT

3. REMOVE RH ENGINE UNDER COVER

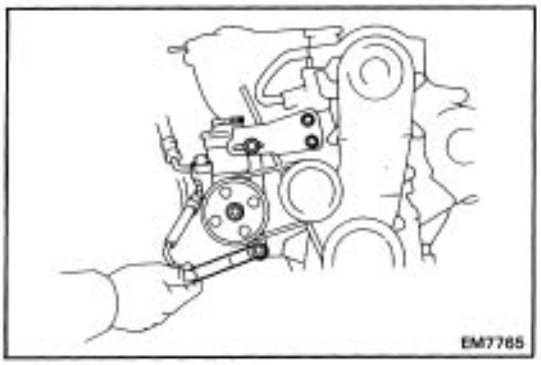

4. (w/ PS)

DISCONNECT PS PUMP

(a) Loosen the adjusting bolt, pivot bolt, and remove the drive belt.

(b) Remove the adjusting bolt, pivot and PS pump.

(c) Suspend the PS pump.

(d) Remove the two bolts and adjusting bar.

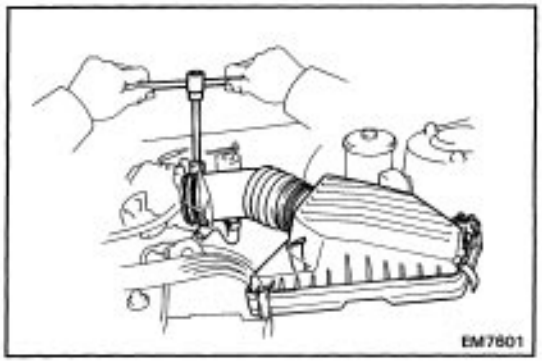

5. REMOVE AIR CLEANER HOSE WITH CAP

(a) Disconnect the vacuum hose from the charcoal canister.

(b) Disconnect the air intake temp., sensor connector from the air cleaner cap.

(c) Disconnect the air hose from the air pipe.

(d) Loosen the air cleaner hose clamp bolt.

(e) Disconnect the air cleaner cap clips.

(f) Remove the air cleaner cap with the air cleaner hose.

6. DISCONNECT ACCELERATOR WIRE FROM BRACKET

7. (A/T)

DISCONNECT THROTTLE CABLE FROM BRACKET

8. (w/ CRUISE CONTROL)

REMOVE CRUISE CONTROL ACTUATOR CABLE

9. REMOVE IIA (See page IG–12)

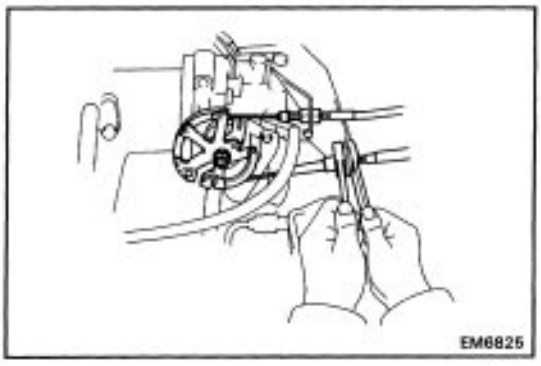

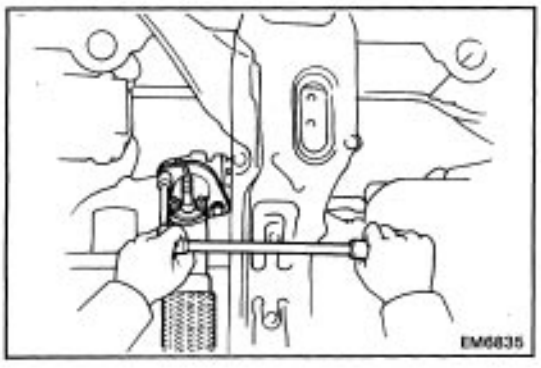

10. DISCONNECT EXHAUST PIPE FROM EXHAUST MANIFOLD

(a) Remove the two nuts from the pipe clamp.

(b) Remove the two nuts. And disconnect the exhaust pipe from the manifold.

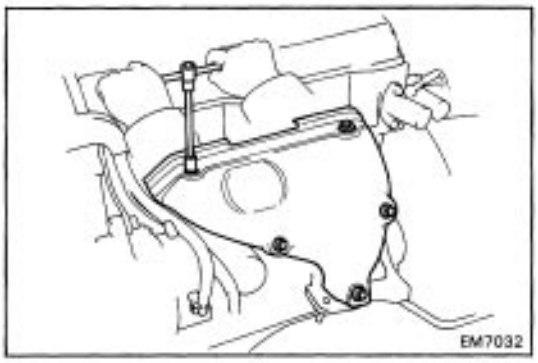

11. REMOVE EXHAUST MANIFOLD

(a) Remove the five bolts and upper heat insulator.

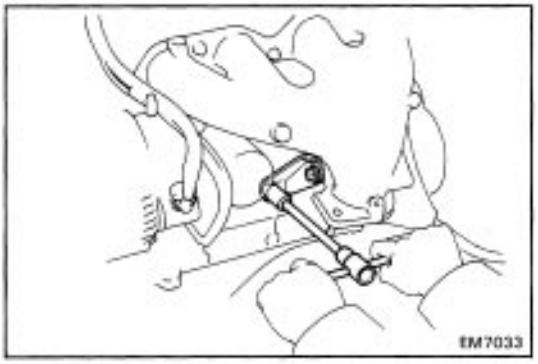

(b) Remove the two bolts and manifold stay.

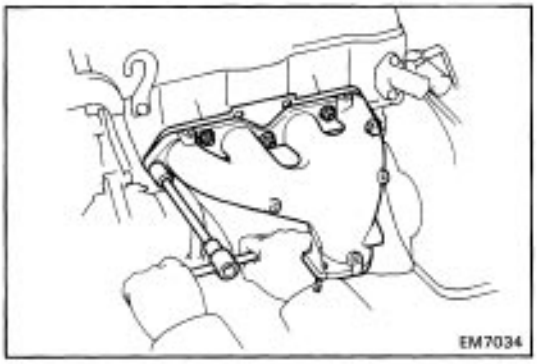

(c) Remove the two bolts, three nuts, exhaust manifold and gasket.

(d) Remove the three bolts and lower heat insulator from the exhaust manifold.

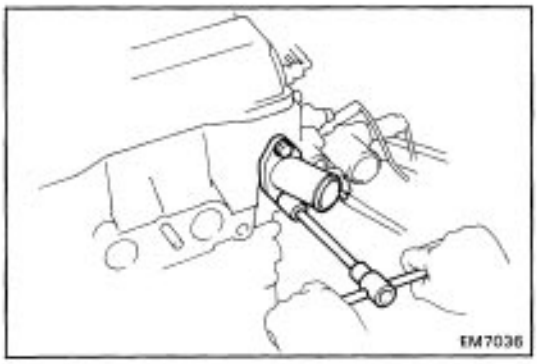

12. REMOVE WATER OUTLET

(a) Disconnect the radiator inlet hose from the water outlet.

(b) Remove the two bolts and water outlet.

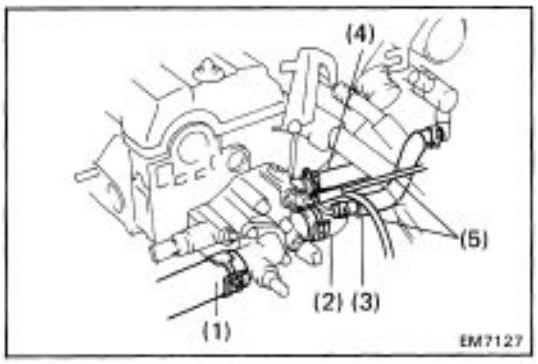

13. REMOVE WATER INLET AND INLET HOUSING

(a) Disconnect the following connectors:

- Water temperature sender gauge connector
- Water temperature sensor connector
- Start injector time switch connector

(b) Disconnect the following hoses:

(1) Radiator outlet hose
(2) Inlet water hose
(3) Water by–pass hose
(4) Heater water hose
(5) Two EVAP BVSV vacuum hoses

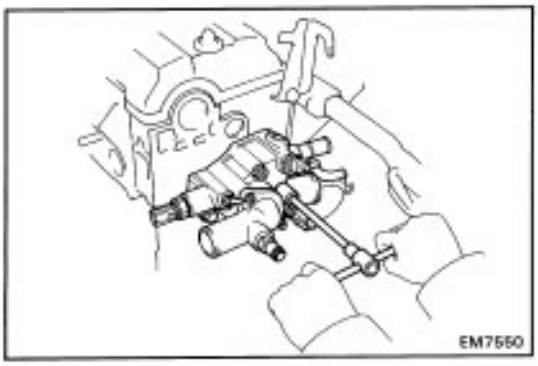

(c) Remove the bolt, two nuts, the water inlet and inlet housing assembly.

14. REMOVE DELIVERY PIPE AND INJECTORS

(See steps 3 to 6 on page FI–55)

15. DISCONNECT ENGINE WIRE FROM NO.3 TIMING BELT COVER

(See step 7 on page EM–31)

16. DISCONNECT ENGINE WIRE FROM INTAKE MANIFOLD

(a) Disconnect the following connectors and wire:

- Ground strap
- ISC valve connector
- Cold start injector connector
- Throttle position sensor connector
- (Calif. and 4WD)
  EGR VSV connector
- (California)
  EGR gas temperature sensor connector
- Vacuum sensor connector

(b) Disconnect the wire clamp from the vacuum pipe.

(c) Remove the two nuts, and disconnect the engine wire from the intake manifold.

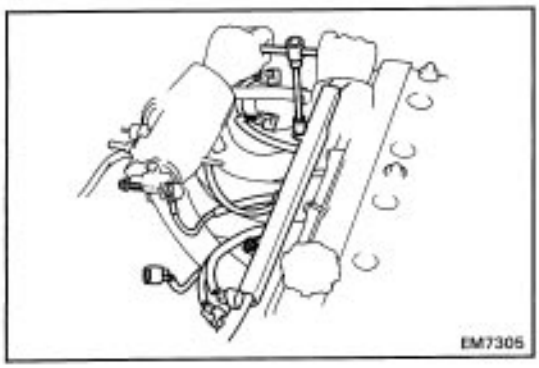

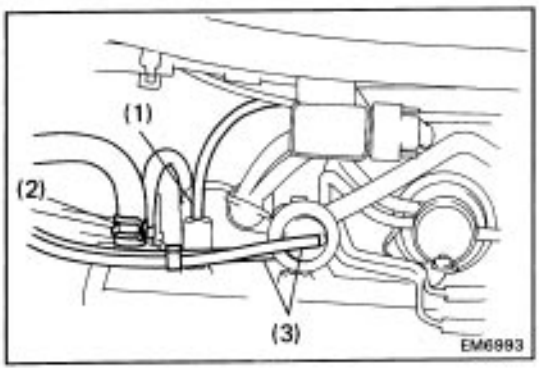

17. DISCONNECT FOLLOWING HOSES:

(a) Disconnect the following vacuum hoses from the intake chamber:

(1) Vacuum sensor hose from gas filter

(2) Brake booster vacuum hose

(3) (with A/C)

Two A/C vacuum hoses from actuator

(b) (w/ PS and/or with A/C)

Disconnect the air hose from the air pipe.

(c) Disconnect the fuel return hose from the air pipe.

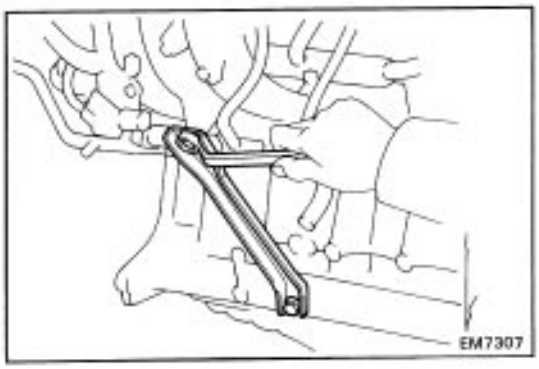

18. REMOVE INTAKE MANIFOLD

(a) Remove the two bolts and manifold stay.

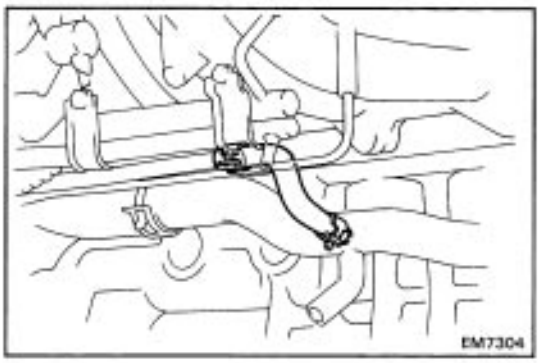

(b) Remove the water by–pass hose from the air pipe.

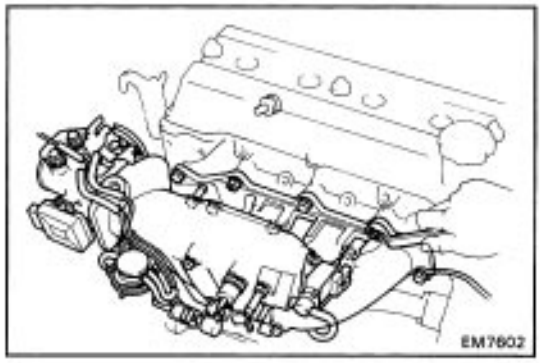

(c) Remove the six bolts, ground strap, two nuts, intake manifold and gasket.

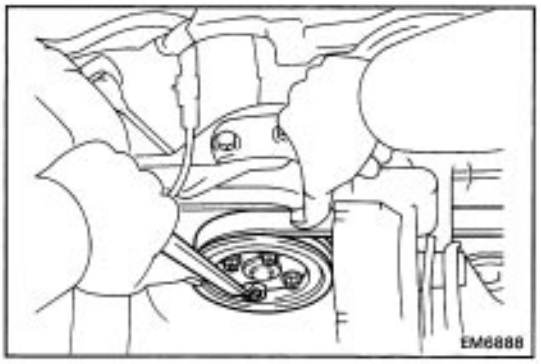

19. REMOVE DRIVE BELT AND WATER PUMP PULLEY

(a) Stretch the belt tight and loosen the water pump pulley bolts.

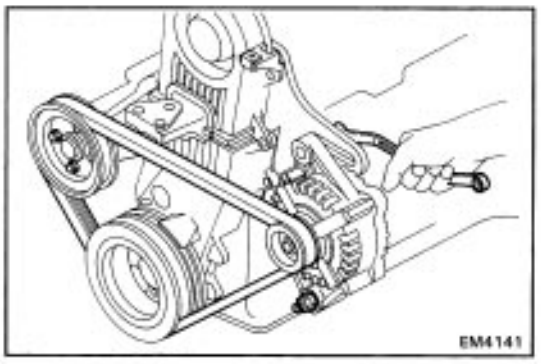

(b) Loosen the pivot nut and adjusting bolt, and remove the drive belt.

(c) Remove the water pump pulley.

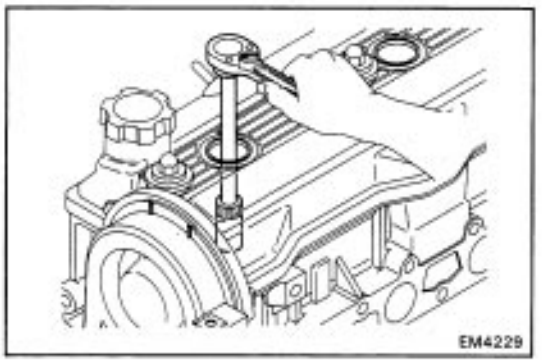

20. REMOVE SPARK PLUG

Using a spark plug wrench (16 mm), remove the spark plugs.

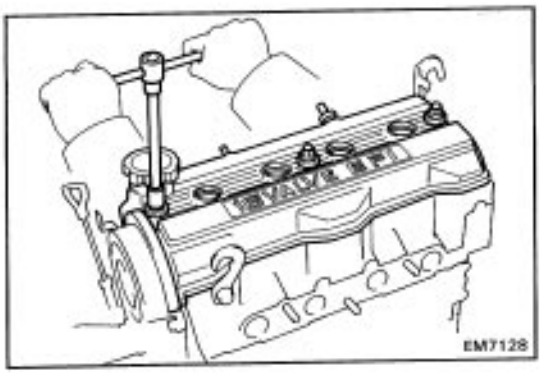

21. REMOVE CYLINDER HEAD COVER

Remove the three cap nuts, grommets, head cover and gasket.

22. REMOVE SEMI–CIRCULAR PLUG

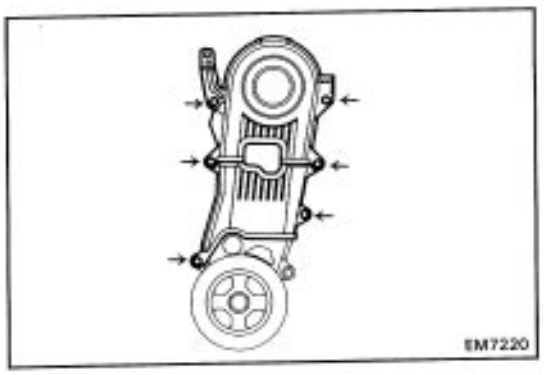

23. REMOVE NO.3 AND NO.2 TIMING BELT COVERS

Remove the six bolts, engine wire bracket, No. 3 and No. 2 timing belt covers.

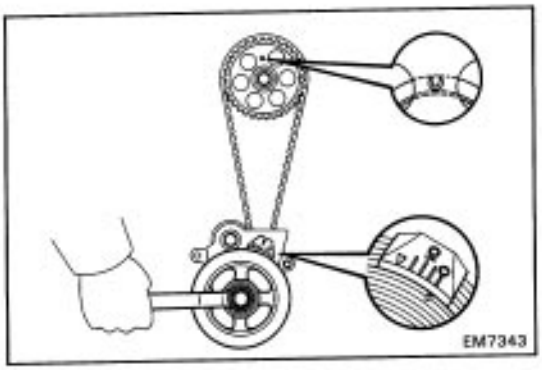

24. SET NO. 1 CYLINDER TO TDC/COMPRESSION

(a) Turn the crankshaft pulley and align its groove with timing mark ”O” of the No.1 timing belt cover.

(b) Check that the hole of the camshaft timing pulley is aligned with the timing mark of the bearing cap.

If not, turn the crankshaft one revolution (3600).

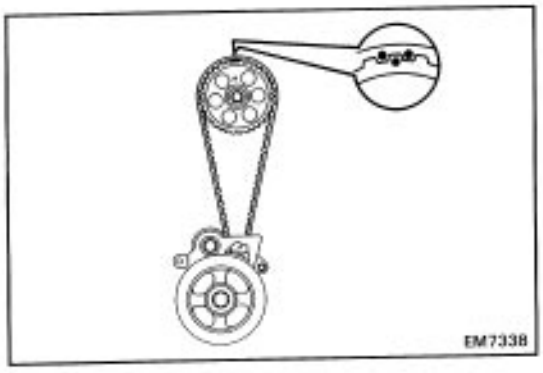

25. REMOVE TIMING BELT FROM CAMSHAFT TIMING PULLEY

(a) Remove the plug from the No.1 timing belt cover.

(b) Place matchmarks on the camshaft timing pulley and belt.

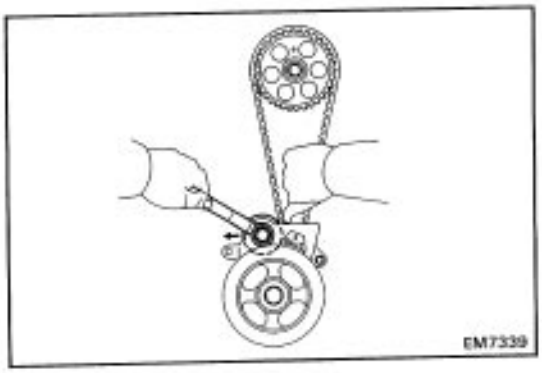

(c) Loosen the idler pulley mount bolt and push the idle pulley toward the left as far as it will go, then tighter it temporarily.

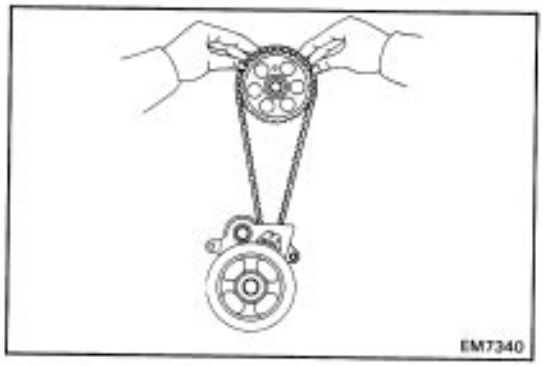

(d) Remove the timing belt from the camshaft timing pulley.

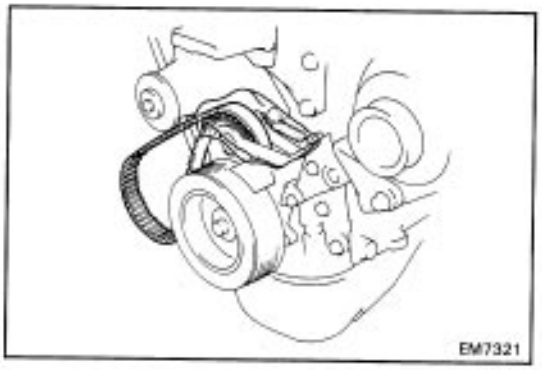

NOTICE:

- **Support the belt so that the meshing of the crankshaft**
  timing pulley and timing belt does not shift.
- **Be careful not to drop anything inside the timing belt cover.**
- **Do not allow the belt to come in contact with oil, water or dust.**

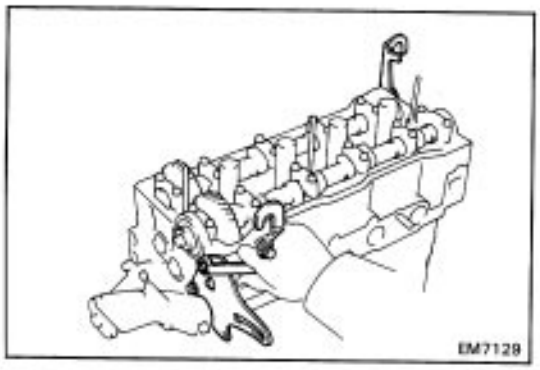

26. REMOVE CAMSHAFT TIMING PULLEY
(See step 18 on page EM–33)

27. REMOVE FAN BELT ADJUSTING BAR
Remove the two bolts and adjusting bar.

28. REMOVE ENGINE HANGERS
Remove the two bolts and engine hangers.

29. REMOVE CAMSHAFTS

NOTICE: Since the thrust clearance of the camshaft is small, the camshaft must be kept level while it is being removed. If the camshaft is not kept level, the portion of the cylinder head receiving the shaft thrust may crack or be damaged, causing the camshaft to seize or break. To avoid this, the following steps should be carried out.

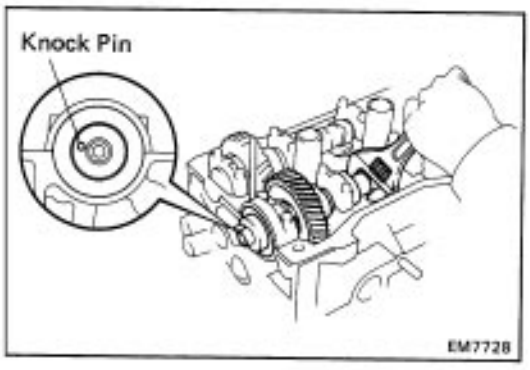

A. Remove intake camshaft

(a) Set the exhaust camshaft so the knock pin is slightly above the top of the cylinder head.

HINT: The above angle allows the No. 1 and No.3 cylinder cam lobes of the intake camshaft to push their valve lifters evenly.

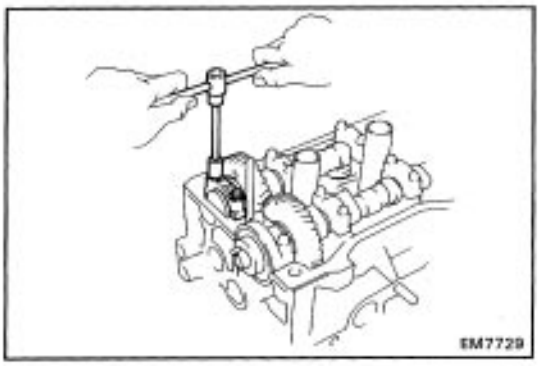

(b) Remove the two bolts and front bearing cap.

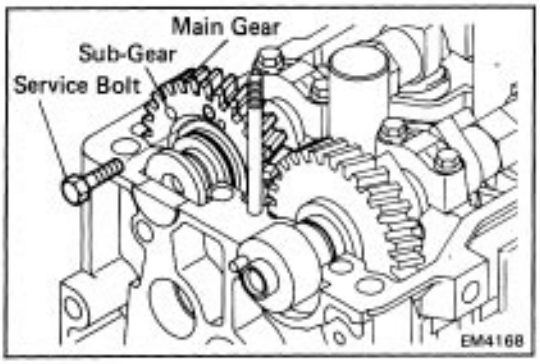

(c) Secure the intake camshaft sub–gear to the main gear with a service bolt.

Recommended service bolt:

Thread diameter 6 mm
Thread pitch 1.0 mm
Bolt length 16 – 20 mm (0.63 – 0.79 in.)

HINT: When removing the camshaft, make certain that the torsional spring force of the sub–gear has been eliminated by the above operation.

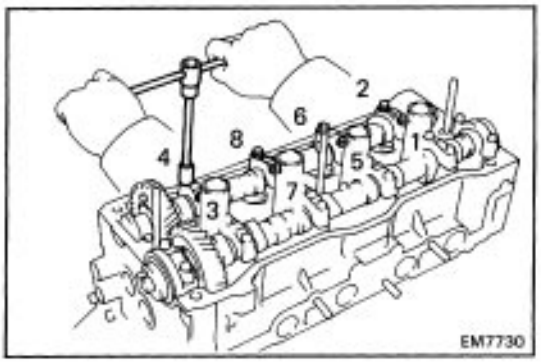

(d) Uniformly loosen and remove the eight bearing cap bolts in several passes in the sequence shown.

(e) Remove the four bearing caps and camshaft.

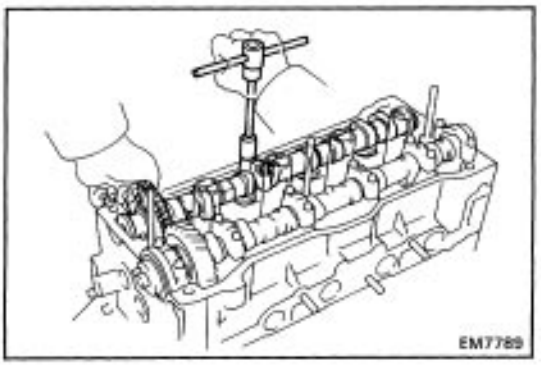

HINT: If the camshaft is not being lifted out straight and level, reinstall the bearing cap with the two bolts. Then alternately loosen and remove the bearing cap bolts with the camshaft gear pulled up.

NOTICE: Do not pry on or attempt to force the camshaft with a tool or other object.

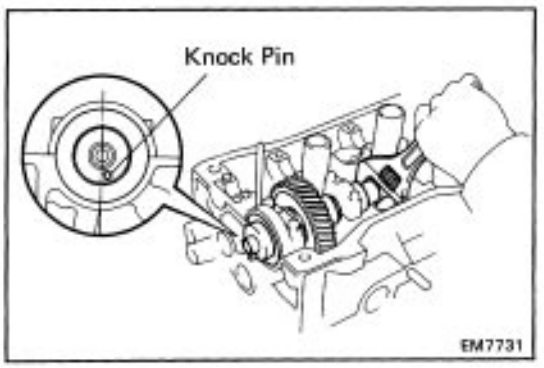

B. Remove exhaust camshaft

(a) Set the exhaust camshaft so the knock pin is located slightly counterclockwise from the vertical axis of the camshaft.

HINT: The above angle allows the No. 1 and No.3 cylinder cam loves of exhaust camshaft to push their valve lifters evenly.

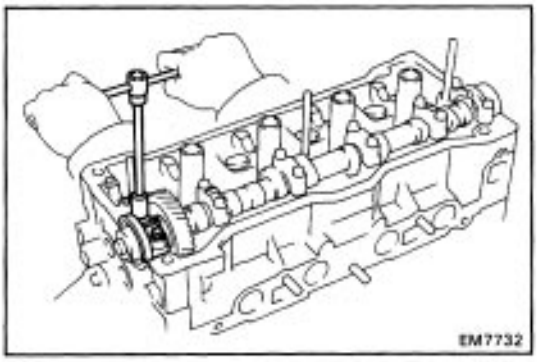

(b) Remove the two bolts, front bearing cap and oil seal.

NOTICE: If the front bearing cap is not removable by hand, do not pry to remove by force but leave as it is without bolts.

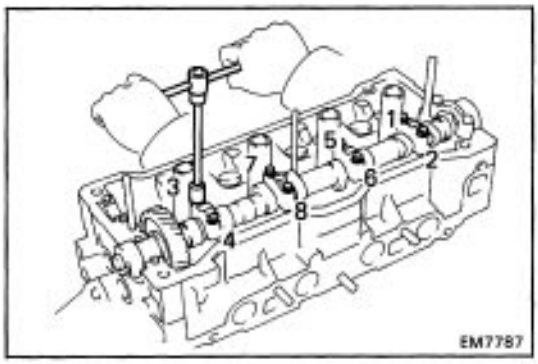

(c) Uniformly loosen and remove the eight bearing cap bolts in several passes in the sequence shown.

(d) Remove the four bearing caps and camshaft.

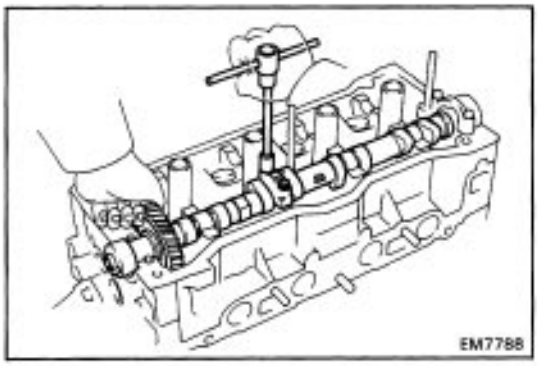

HINT: If the camshaft is not being lifted out straight and level, reinstall the No.3 bearing cap with the two bolts. Then alternately loosen and remove the two bearing cap bolts with the camshaft gear pulled up.

NOTICE: Do not pry on or attempt to force the camshaft with a tool or other object.

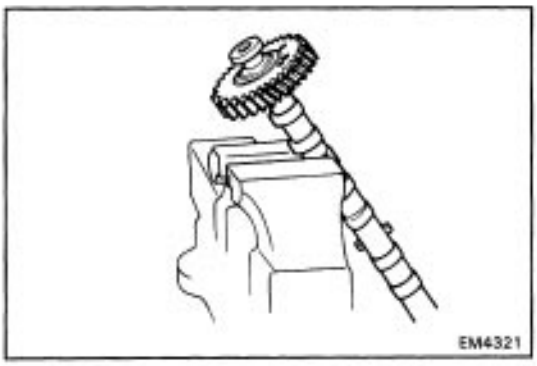

30. DISASSEMBLE INTAKE CAMSHAFT

(a) Mount the hexagonal wrench head portion of the camshaft in a vise.

NOTICE: Be careful not to damage the camshaft.

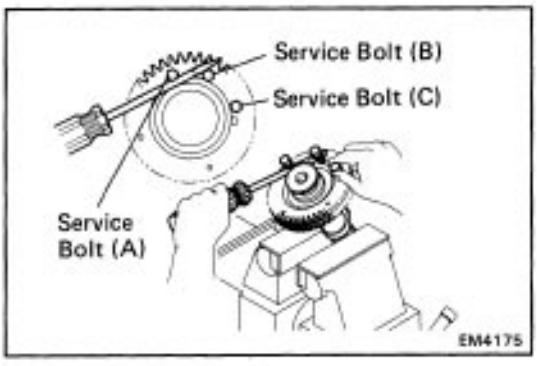

(b) Insert a service bolt (A) and (B) into the service holes of the camshaft sub–gear.

(c) Using a screwdriver, turn the sub–gear clockwise, and remove the service bolt (C).

NOTICE: Be careful not to damage the camshaft.

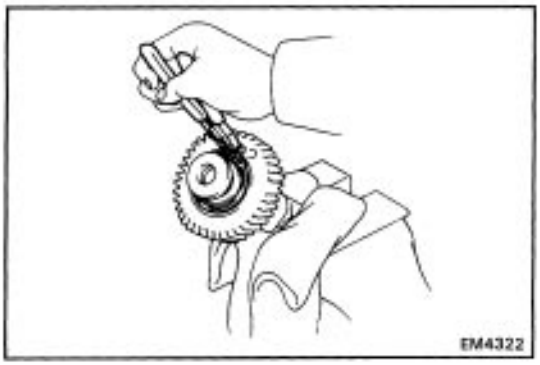

(d) Using snap ring pliers, remove the snap ring.

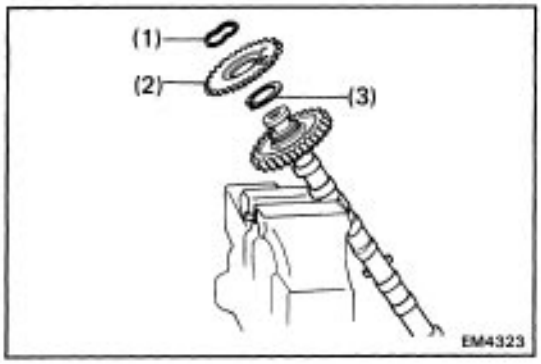

(e) Remove the following parts:
(1) Wave washer
(2) Camshaft sub–gear
(3) Camshaft gear spring

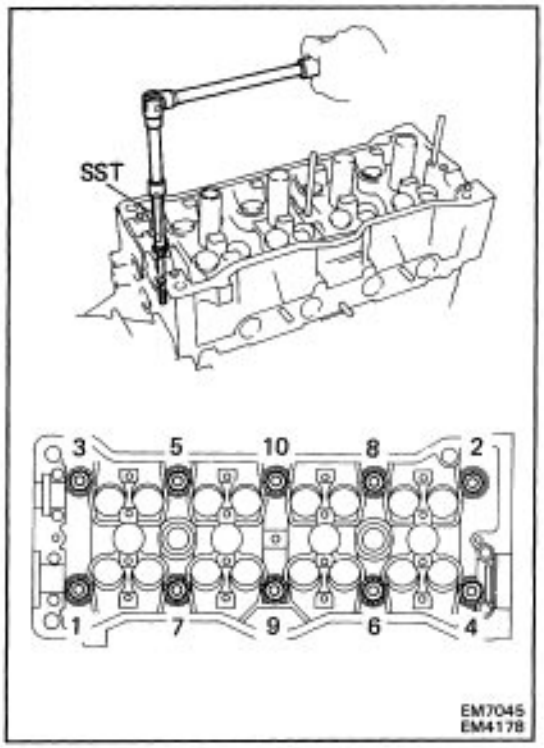

31. REMOVE CYLINDER HEAD

(a) Using SST, uniformly loosen and remove the ten cylinder head bolts in several passes in the sequence shown.

SST 09205–16010

NOTICE: Head warpage or cracking could result from removing bolts in an incorrect order.

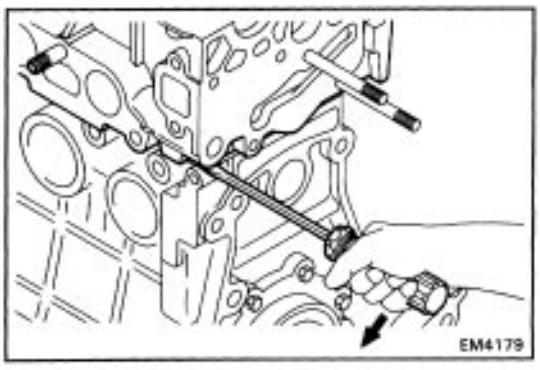

(b) Lift the cylinder head from the dowels on the cylinder block and place the head on wooden blocks on a bench.

HINT: If the cylinder head is difficult to lift off, pry with a screwdriver between the cylinder head and block saliences.

NOTICE: Be careful not to damage the cylinder head and cylinder block surfaces of the cylinder head gasket side.

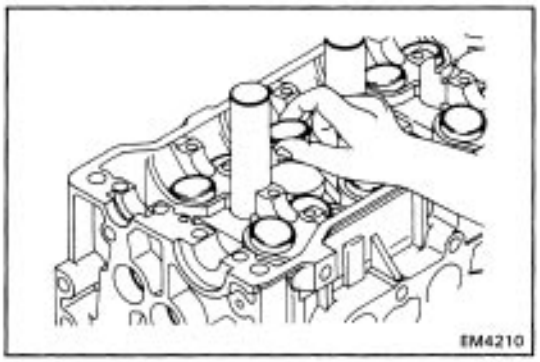

DISASSEMBLY OF CYLINDER HEAD

(See page EM–54)

1. REMOVE VALVE LIFTERS AND SHIMS

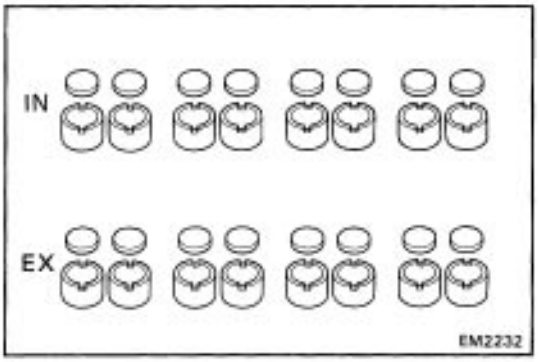

HINT: Arrange the valve lifters and shims in correct order.

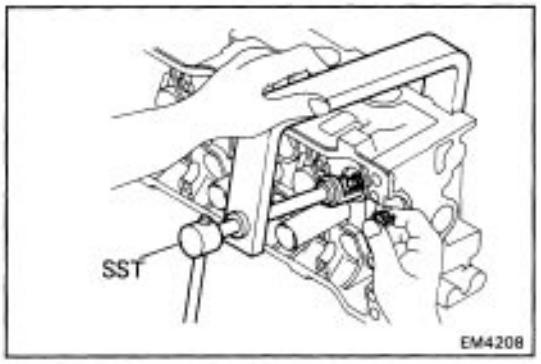

2. REMOVE VALVES

(a) Using SST, compress the valve spring and remove the two keepers.

SST 09202–70010

(b) Remove the spring retainer, valve spring, valve and spring seat.

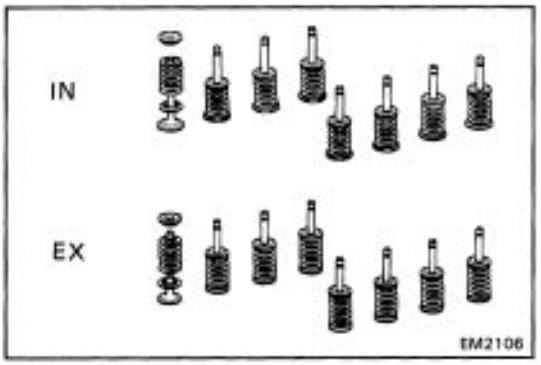

HINT: Arrange the valves, valve springs, spring seats and spring retainers in correct order.

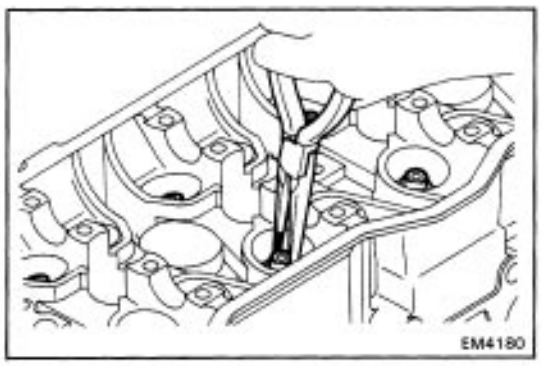

(c) Using needle–nose pliers, remove the oil seal.

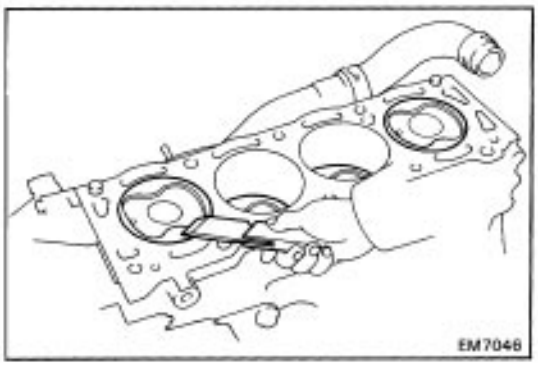

INSPECTION, CLEANING AND REPAIR OF CYLINDER HEAD COMPONENTS

1. CLEAN TOP SURFACES OF PISTONS AND BLOCK

(a) Turn the crankshaft and bring each piston to the top dead center (TDC). Using a gasket scraper, remove all the carbon from the piston top surface.

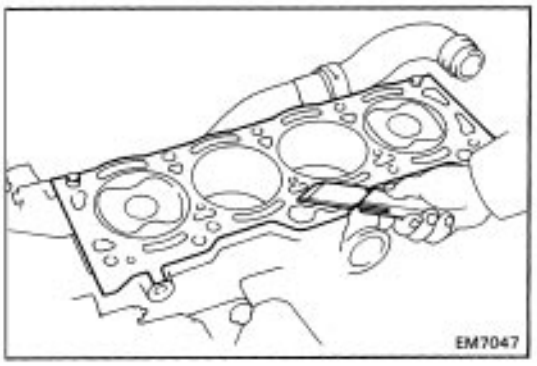

(b) Using a gasket scraper, remove all the gasket material from the top surfaces of the cylinder block.

(c) Using compressed air, blow carbon and oil from the bolt holes.

CAUTION: Protect your eyes when using high pressure compressed air.

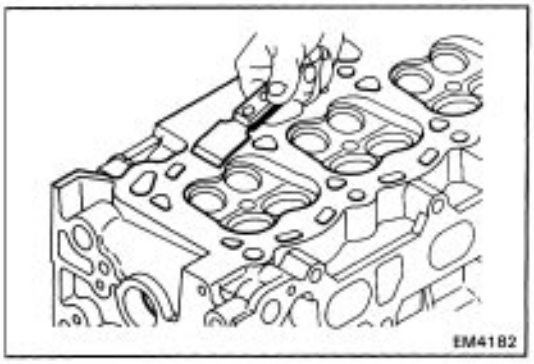

2. CLEAN CYLINDER HEAD

A. Remove gasket material

Using a gasket scraper, remove all the gasket material from the cylinder head surface.

NOTICE: Be careful not to scratch the cylinder block contact surface.

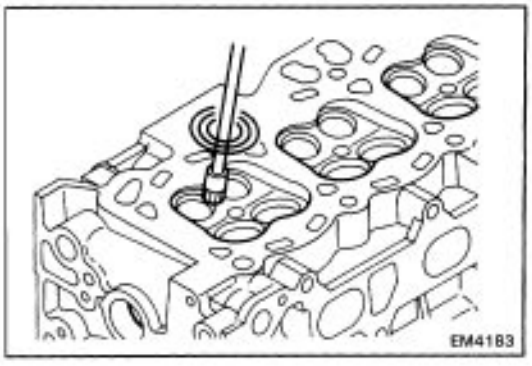

B. Clean combustion chambers

Using a wire brush, remove all the carbon from the combustion chambers.

NOTICE: Be careful not to scratch the cylinder block contact surface.

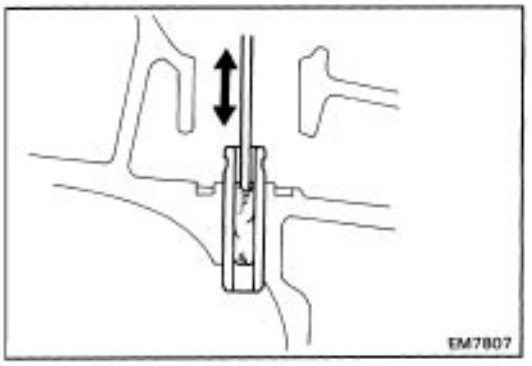

C. Clean valve guide bushings

Using a valve guide bushing brush and solvent, clean all the guide bushings.

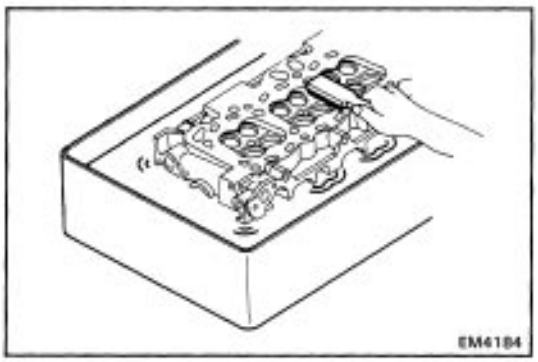

D. Clean cylinder head

Using a soft brush and solvent, thoroughly clean cylinder head.

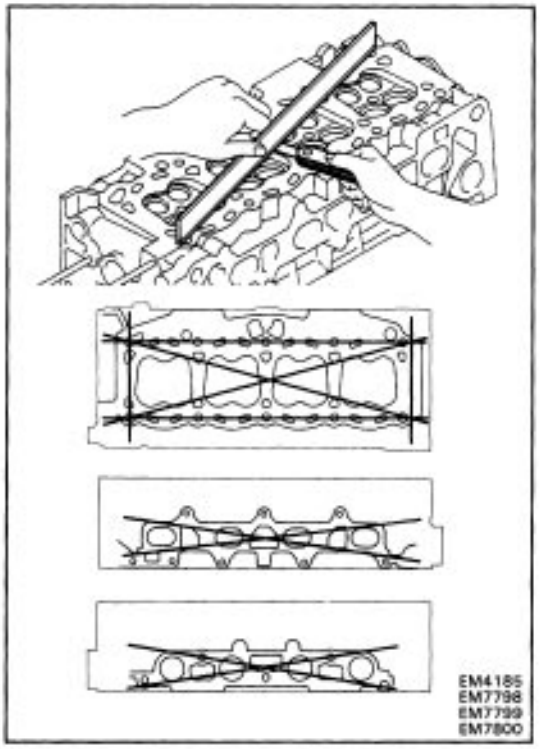

3. INSPECT CYLINDER HEAD

A. Inspect for flatness

Using a precision straight edge and feeler gauge, measure the surfaces contacting the cylinder block and manifolds for warpage.

Maximum warpage:

Cylinder block side 0.05 mm (0.0020 in.)

Manifold side 0.10 mm (0.0039 in.)

If warpage is greater than maximum, replace the cylinder head.

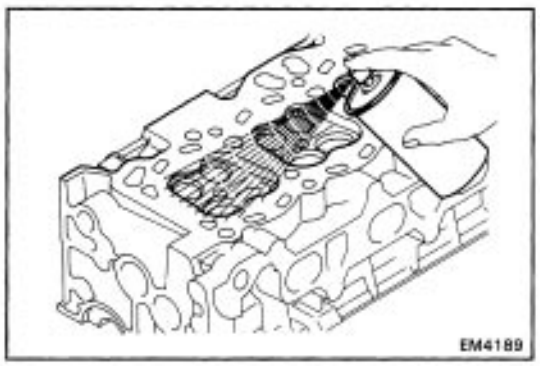

B. Inspect for cracks

Using a dye penetrant, check the combustion chamber, intake and exhaust ports, head surface and the top of the head for cracks.

If cracked, replace the cylinder head.

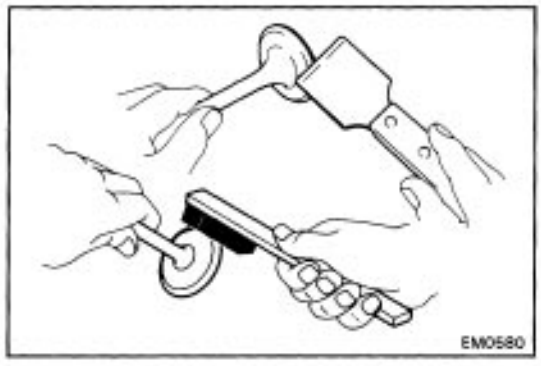

4. CLEAN VALVES

(a) Using a gasket scraper, chip off any carbon from the valve head.

(b) Using a wire brush, thoroughly clean the valve.

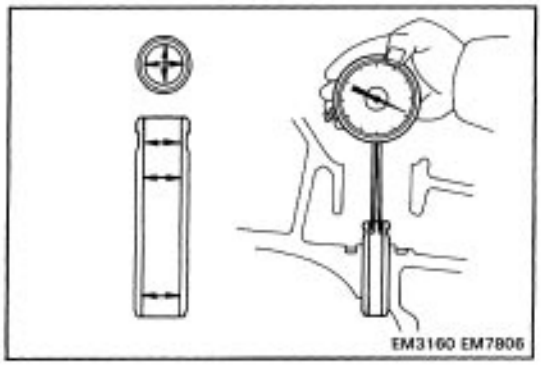

5. INSPECT VALVE STEMS AND GUIDE BUSHINGS

(a) Using a caliper gauge, measure the inside diameter of the guide bushing.

Bushing inside diameter:

6.01 – 6.03 mm (0.2366 – 0.2374 in.)

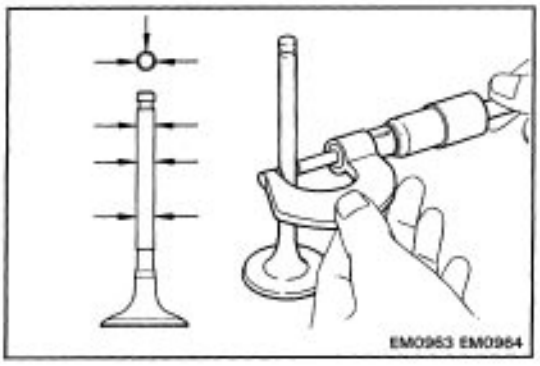

(b) Using a micrometer, measure the diameter of the valve stem.

Valve stem diameter:

Intake 5.970 – 5.985 mm (0.2350 – 0.2356 in.)

Exhaust 5.965 – 5.980 mm (0.2348 – 0.2354 in.)

(c) Subtract the valve stem diameter measurement from the guide bushing inside diameter measurement.

Standard oil clearance:

Intake 0.025 – 0.060 mm (0.0010 – 0.0024 in.)

Exhaust 0.030 – 0.065 mm (0.0012 – 0.0026 in.)

Maximum oil clearance:

Intake 0.08 mm (0.0031 in.)

Exhaust 0.10 mm (0.0039 in.)

If the clearance is greater than maximum, replace the valve and guide bushing.

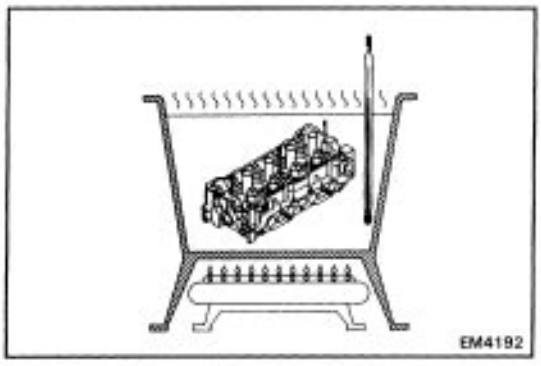

6. IF NECESSARY, REPLACE VALVE GUIDE BUSHINGS

(a) Gradually heat the cylinder head to 80 – 100°C (176 – 212 °F).

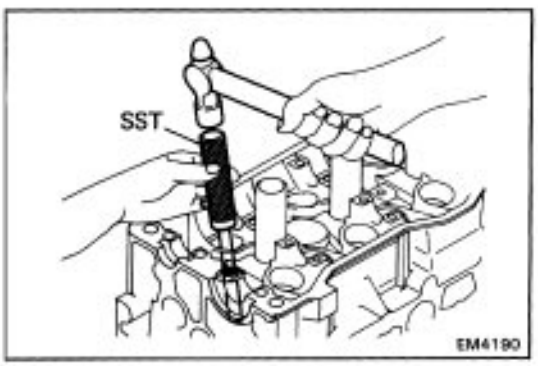

(b) Using SST and a hammer, tap out the guide bushing.

SST 09201–70010

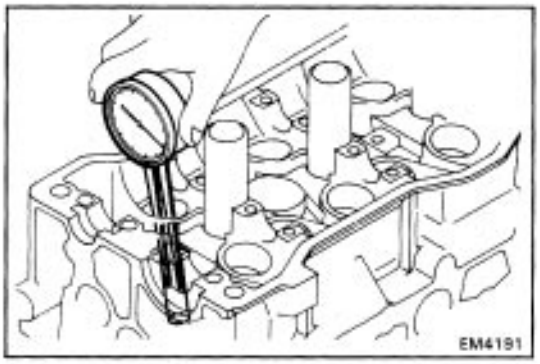

(c) Using a caliper gauge, measure the bushing bore diameter of the cylinder head.

Standard valve guide bore (cold):

11.000 – 11.027 mm (0.4331 – 0.4341 in.)

Both intake and exhaust

Bushing bore diameter mm (in.)	Bushing size
11.000 – 11.027 (0.4331 – 0.4342)	Used STD
11.050 – 11.077 (0.4350 – 0.4361)	Used O/S 0.05

(d) Select a new guide bushing (STD size or O/S 0.05). If the bushing bore diameter of the cylinder head is greater than 11.027 mm (0.4341 in.), machine the bushing bore to the following dimension:

Rebored cylinder head bushing bore dimension:

11.050 – 11.077 mm (0.4350 – 0.4361 in.)

If the bushing bore diameter of the cylinder head is greater than 11.077 mm (0.4361 in.), replace the cylinder head.

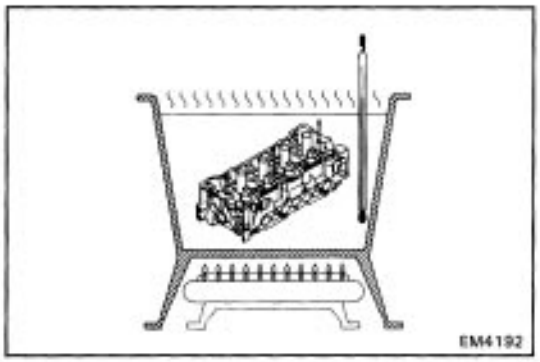

(e) Gradually heat the cylinder head to 80 – 100°C (176–212°F).

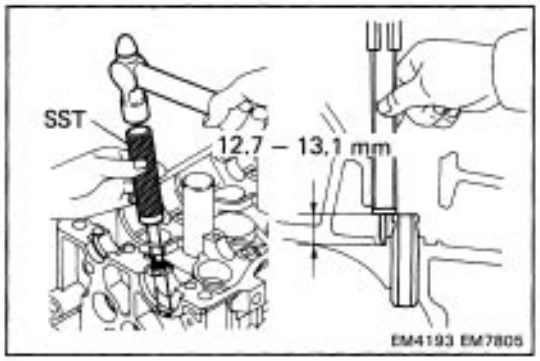

(f) Using SST and a hammer, tap in a new guide bushing until there is 12.7 – 13.1 mm (0.500 – 0.516 in.) protruding from the cylinder head.

SST 09201–70010

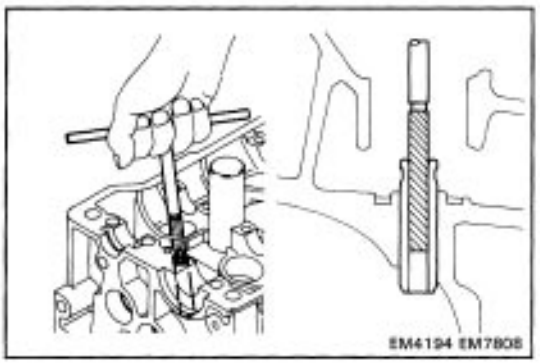

(g) Using a sharp 6 mm reamer, ream the guide bushing to obtain the standard specified clearance (See page EM–67) between the guide bushing and valve stem.

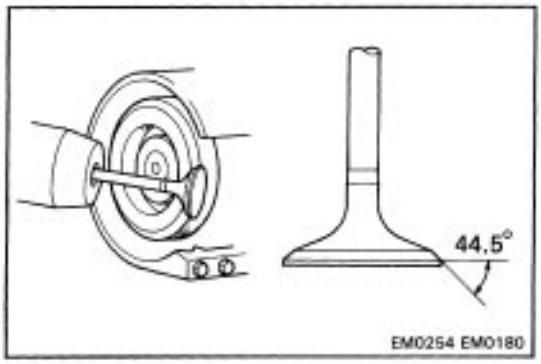

7. INSPECT AND GRIND VALVES

(a) Grind the valve enough to remove pits and carbon.

(b) Check that the valve is ground to the correct valve face angle.

Valve face angle: 44.5°

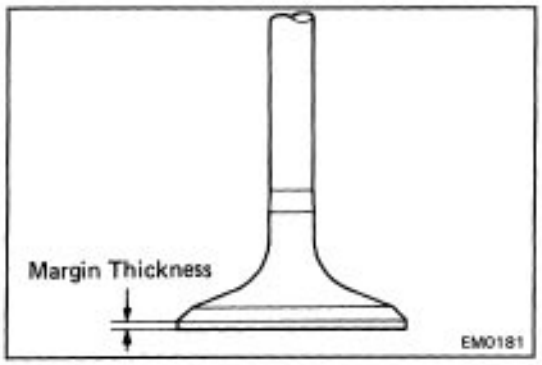

(c) Check the valve head margin thickness.

Standard margin thickness:

Intake 1.05 – 1.45 mm (0.0413 – 0.0571 in.)

Exhaust 1.19 – 1.59 mm (0.0469 – 0.0629 in.)

Minimum margin thickness: 0.5 mm (0.020 in.)

If the margin thickness is less than minimum, replace the valve.

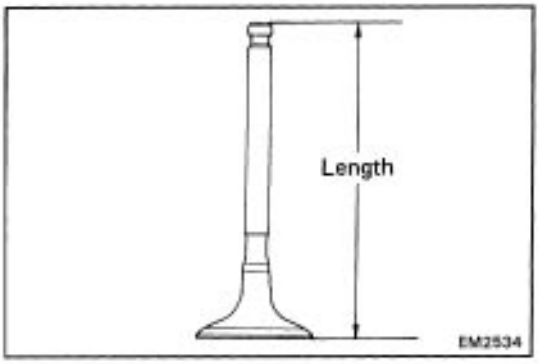

(d) Check the valve overall length.

Standard overall length:

Intake 91.45 mm (3.6004 in.)

Exhaust 91.90 mm (3.6181 in.)

Minimum overall length:

Intake 90.95 mm (3.5807 in.)

Exhaust 91.40 mm (3.5984 in.)

If the overall length is less than minimum, replace the valve.

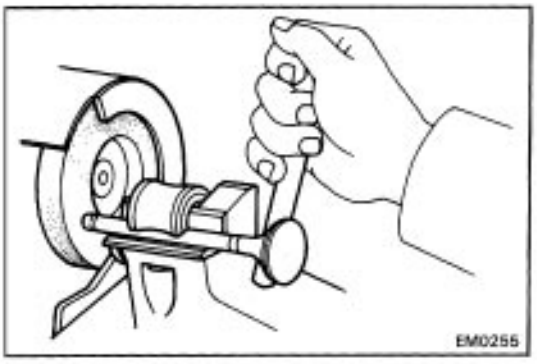

(e) Check the surface of the valve stem tip for wear.

If the valve stem tip is worn, resurface the tip with a grinder or replace the valve.

NOTICE: Do not grind off more than minimum.

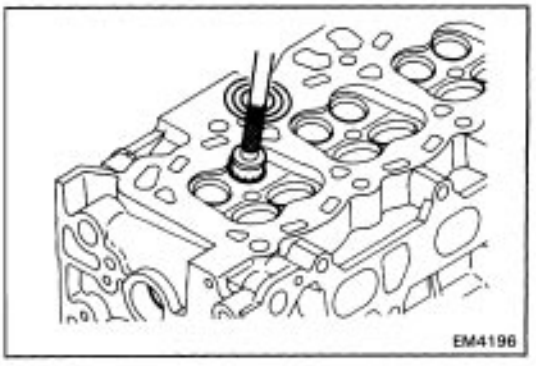

8. INSPECT AND CLEAN VALVE SEATS

(a) Using a 45° carbide cutter, resurface the valve seats.

Remove only enough metal to clean the seats.

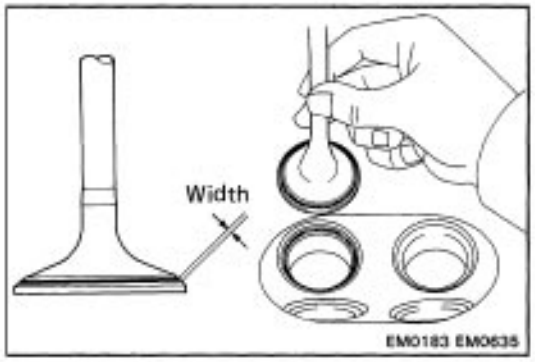

(b) Check the valve seating position.

Apply a thin coat of prussian blue (or white lead) to the valve face. Lightly press the valve against the seat.

Do not rotate the valve.

(c) Check the valve face and seat for the following:

- If blue appears 360˚ around the face, the valve is concentric. If not, replace the valve.
- If blue appears 360˚ around the valve seat, the guide and seat are concentric. If not, resurface the seat.
- Check that the seat contact is in the middle of the valve face with the following width:

1.2 – 1.6 mm (0.047 – 0.063 in.)

If not, correct the valve seats as follows:

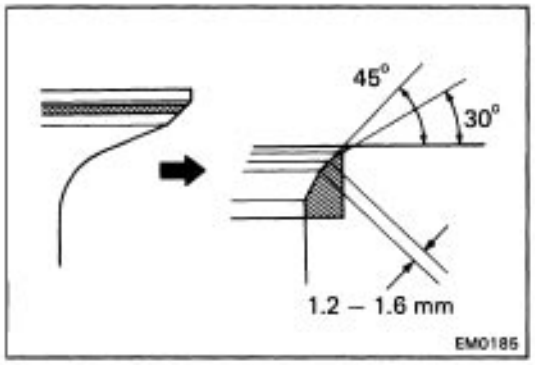

(1) If the seating is too high on the valve face, use 30˚ and 45˚ cutters to correct the seat.

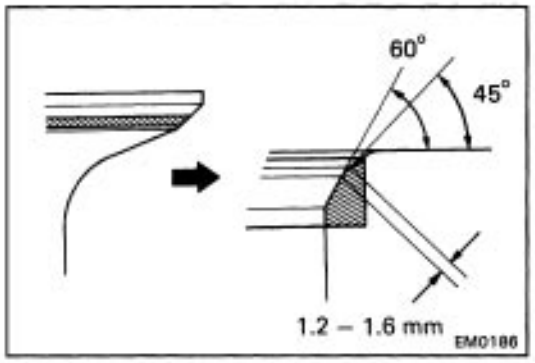

(2) If the seating is too low on the valve face, use 60˚ and 45˚ cutters to correct the seat.

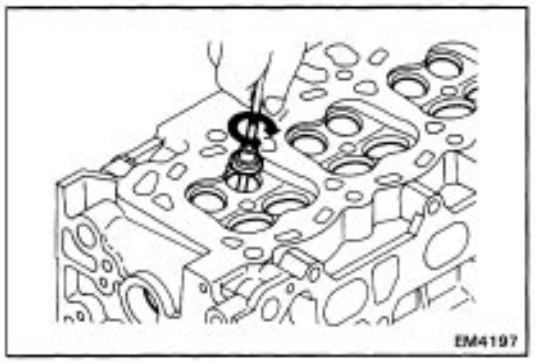

(d) Hand–lap the valve and valve seat with an abrasive compound.

(e) After hand–lapping, clean the valve and valve seat.

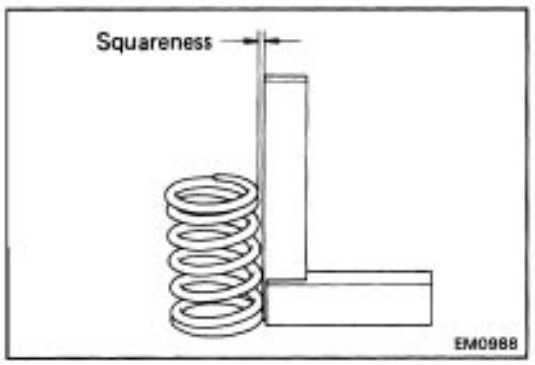

9. INSPECT VALVE SPRINGS

(a) Using a steel square, measure the squareness of the valve spring.

Maximum squareness: 2.0 mm (0.075 in.)

If squareness is greater than maximum, replace the valve spring.

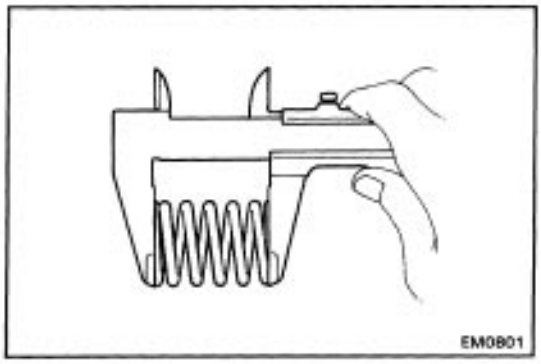

(b) Using vernier calipers, measure the free length of the valve spring.

Free length: 43.8 mm (1.724 in.)

If the free length is not as specified, replace the valve spring.

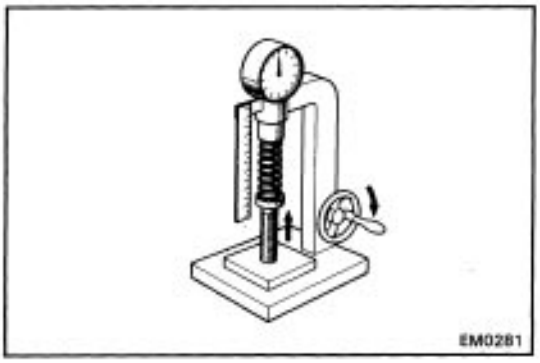

(c) Using a spring tester, measure the tension of the valve spring at the specified installed length.

Installed tension:

14.6 – 15.8 kg (32.2 – 34.8 1b, 143 – 155 N)
at 34.7 mm (1.366 in.)

If the installed tension is not as specified, replace the valve spring.

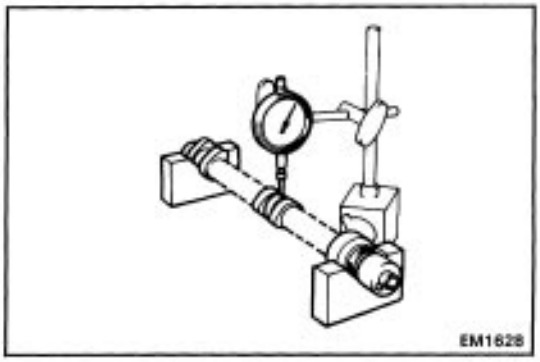

10. INSPECT CAMSHAFTS AND BEARINGS

A. Inspect camshaft for runout

(a) Place the camshaft on V–blocks.

(b) Using a dial indicator, measure the circle runout at the center journal.

Maximum circle runout: 0.04 mm (0.0016 in.)

If the circle runout is greater than maximum, replace the camshaft.

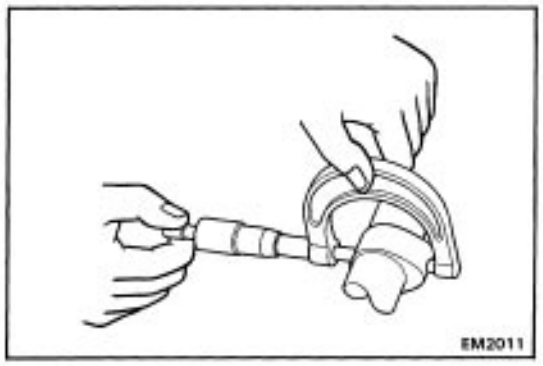

B. Inspect cam lobes

Using a micrometer, measure the cam lobe height.

Standard cam lobe height:

Intake 35.21 – 35.31 mm
(1.3862 – 1.3902 in.)
Exhaust 34.91 – 35.01 mm
(1.3744 – 1.3783 in.)

Minimum cam lobe height:

Intake 34.81 mm (1.3705 in.)
Exhaust 34.51 mm (1.3587 in.)

If the cam lobe height is greater than minimum, replace the camshaft.

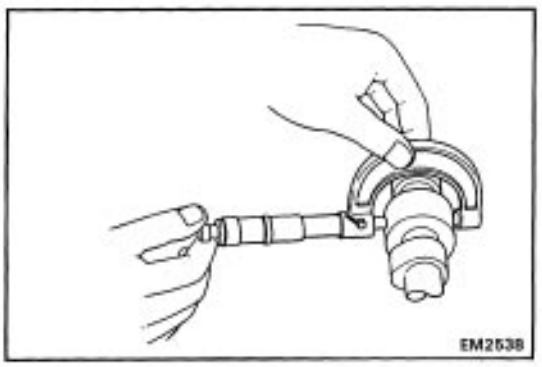

C. Inspect camshaft journals

Using a micrometer, measure the journal diameter.

Journal diameter:

Exhaust No.1 24.949 – 24.965 mm
(0.9822 – 0.9829 in.)
Others 22.949 – 22.965 mm
(0.9035 – 0.9041 in.)

If the journal diameter is not as specified, check the oil clearance.

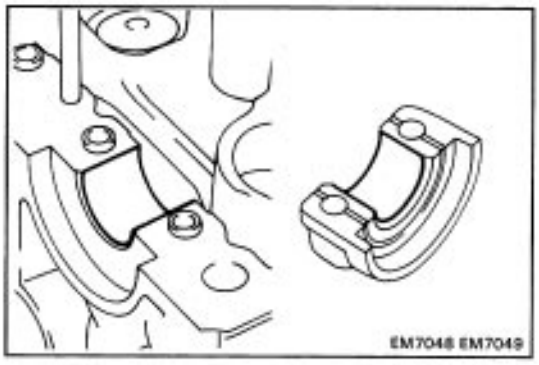

D. Inspect camshaft bearings

Check the bearings for flaking and scoring.

If the bearings are damaged, replace the bearing caps and cylinder head as a set.

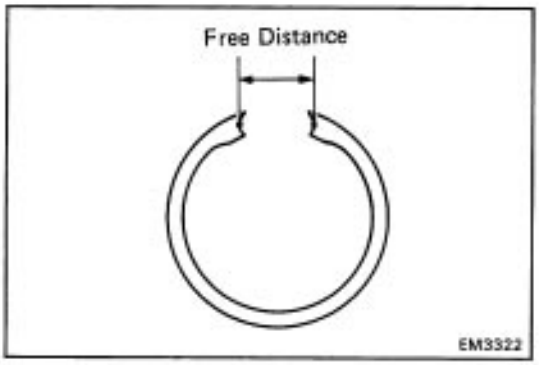

E. Inspect camshaft gear spring

Using vernier calipers, measure the free distance between the spring ends.

Free distance: 17.1 – 17.5 mm (0.673 – 0.689 in.)

If the free distance is not as specified, replace the gear spring.

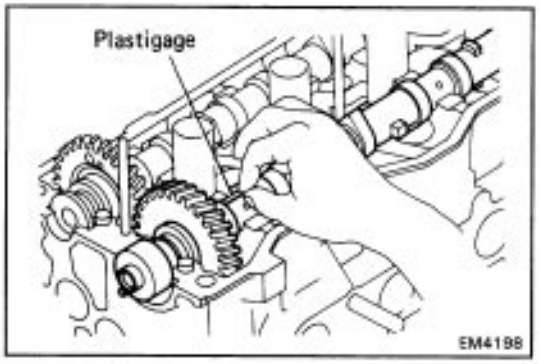

F. Inspect camshaft journal oil clearance

(a) Clean the bearing caps and camshaft journals.

(b) Place the camshafts on the cylinder head.

(c) Lay a strip of Plastigage across each of the camshaft journals.

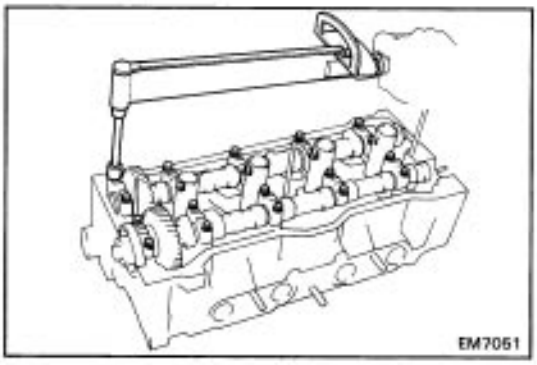

(d) Install the bearing caps.

(See step 3 on pages EM–78 to 81)

Torque: 130 kg–cm (9 ft–lb, 13 N–m)

NOTICE: Do not turn the camshaft.

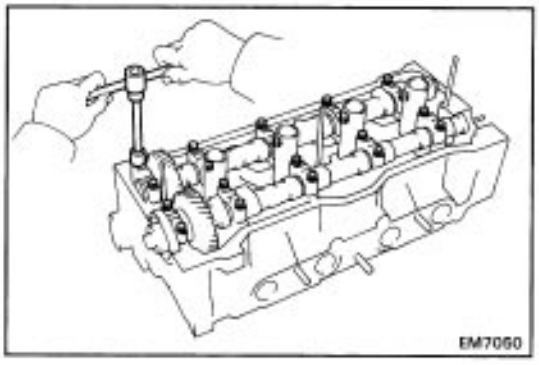

(e) Remove the bearing caps.

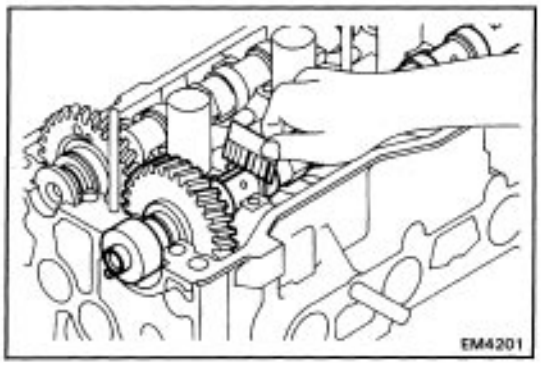

(f) Measure the Plastigage at its widest point.

Standard oil clearance: 0.035 – 0.072 mm (0.0014 – 0.0028 in.)

Maximum oil clearance: 0.10 mm (0.0039 in.)

If the oil clearance is greater than maximum, replace the camshaft. If necessary, replace the bearing caps and cylinder head as a set.

(g) Completely remove the Plastigage.

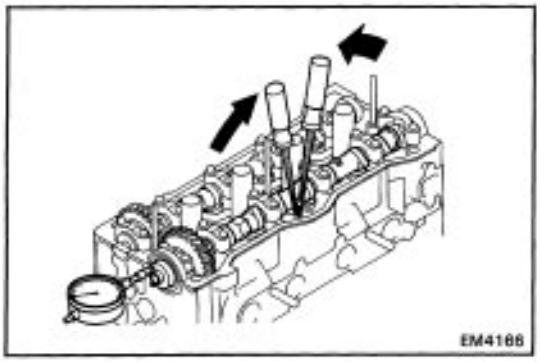

G. Inspect camshaft thrust clearance

(a) Install the camshafts.

(See step 3 on pages EM–78 to 81)

(b) Using a dial indicator, measure the thrust clearance while moving the camshaft back and forth.

Standard thrust clearance:

Intake 0.030 – 0.085 mm (0.0012 – 0.0033 in.)

Exhaust 0.035 – 0.090 mm (0.0014 – 0.0035 in.)

Maximum thrust clearance: 0.11 mm (0.0043 in.)

If the thrust clearance is greater than maximum, replace the camshaft. If necessary, replace the bearing caps and cylinder head as a set.

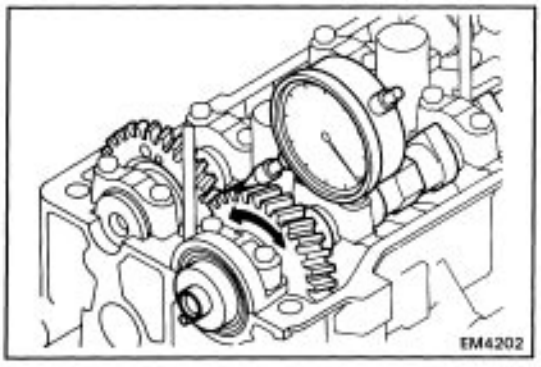

H. Inspect camshaft gear backlash

(a) Install the camshafts without installing the exhaust camshaft sub–gear.

(See step 3 on page EM–78 to 81)

(b) Using a dial indicator, measure the backlash.

Standard backlash: 0.020 – 0.200 mm (0.0008 – 0.0079 in.)

Maximum backlash: 0.30 mm (0.0188 in.)

If the backlash is greater than maximum, replace the camshafts.

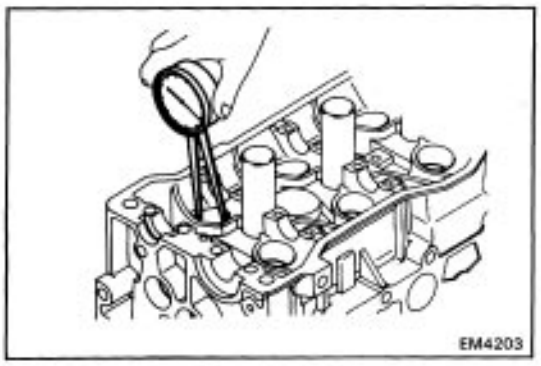

11. INSPECT VALVE LIFTERS AND LIFTER BORES

(a) Using a caliper gauge, measure the lifter bore diameter of the cylinder head.

Lifter bore diameter: 28.005 – 28.026 mm (1.1026 – 1.1034 in.)

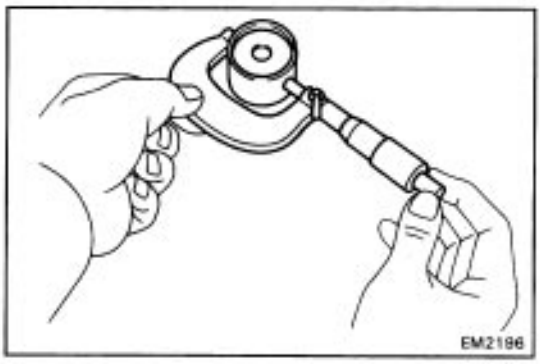

(b) Using a micrometer, measure the lifter diameter.
Lifter diameter: 27.975 – 27.985 mm (1.1014 – 1.1018 in.)

(c) Subtract the lifter diameter measurement from the lifter bore diameter measurement.
Standard oil clearance: 0.020 – 0.051 mm (0.0008 – 0.0020 in.)
Maximum oil clearance: 0.07 mm (0.0028 in.)
If the oil clearance is greater than maximum, replace the lifter. If necessary, replace the cylinder head.

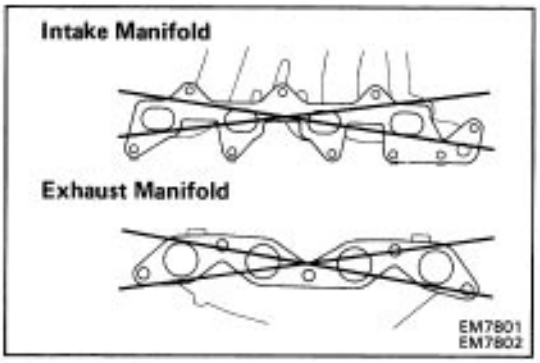

12. INSPECT INTAKE AND EXHAUST MANIFOLDS
Using precision straight edge and feeler gauge, measure the surface contacting the cylinder head for warpage.
Maximum warpage:
Intake manifold 0.20 mm (0.0079 in.)
Exhaust manifold 0.30 mm (0.0118 in.)
If warpage is greater than maximum, replace the manifold.

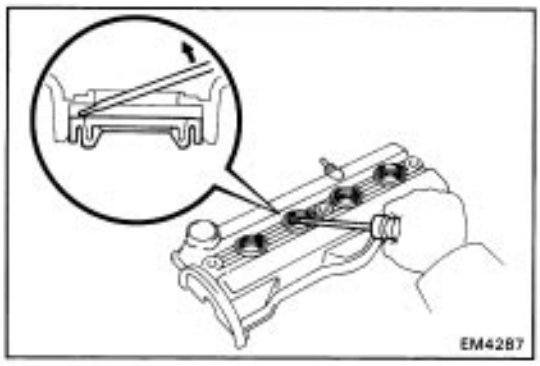

13. IF NECESSARY, REPLACE SPARK PLUG TUBE GASKET
(a) Using a screwdriver, pry out the gasket.

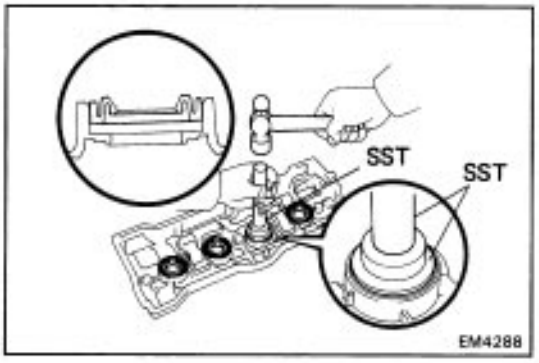

(b) Using SST, tap in a new gasket until its surface is flush with the upper edge of the cylinder head cover.
SST 09550–10012 (09552–10010, 09560–10010)
(c) Apply a light coat of MP grease to the gasket lip.

ASSEMBLY OF CYLINDER HEAD

(See page EM–54)

HINT:

- Thoroughly clean all parts to be assembled.
- Before installing the parts, apply new engine oil to all sliding and rotating surfaces.
- Replace all gaskets and oil seals with new ones.

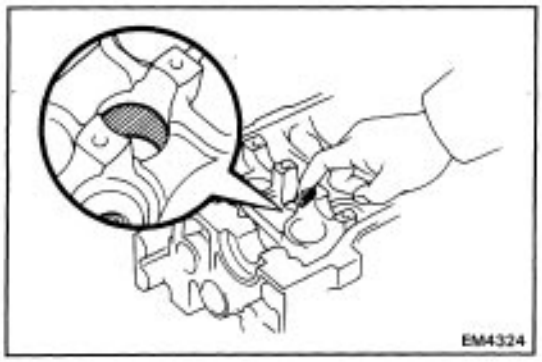

1. INSTALL SPARK PLUG TUBES

HINT: When using a new cylinder lead, spark plug tubes must be installed.

(a) Apply adhesive to the spark plug tube hole of the cylinder head.

Adhesive: Part No.08833–00070, THREE BOND 1324 or equivalent

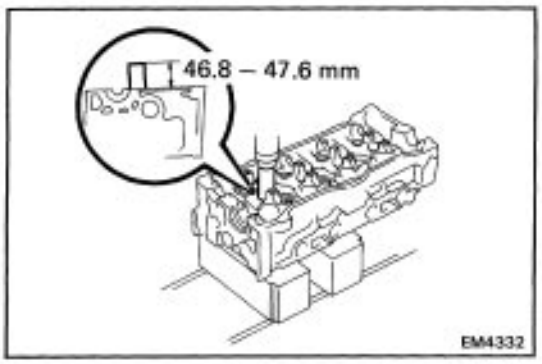

(b) Using a press, press in a new spark plug tube until there is 46.8 – 47.6 mm (1.843 – 1.874 in.) protruding from the cylinder head.

NOTICE: Avoid tapping a new spark plug tube in too far by measuring the amount of protrusion while pressing.

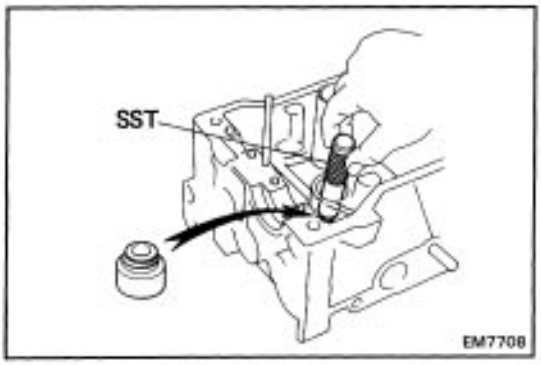

2. INSTALL VALVES

(a) Using SST, push in a new oil seal.

SST 09201–41020

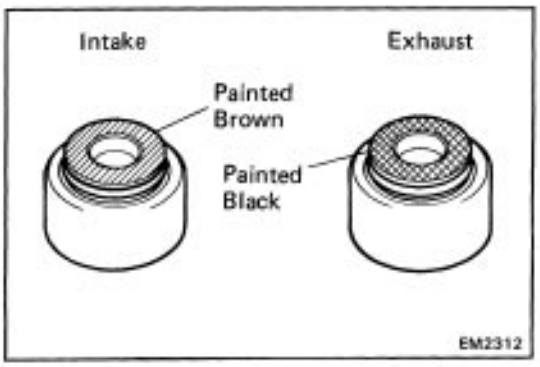

HINT: The intake valve oil seal is brown and the exhaust valve oil seal is black.

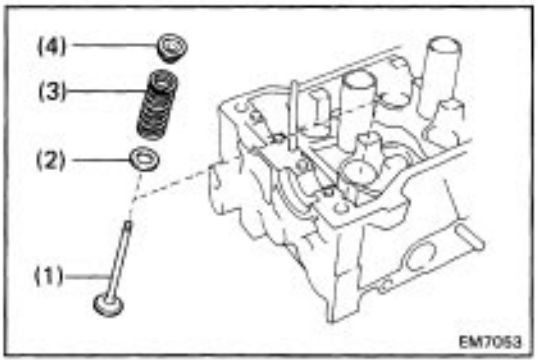

(b) Install the following parts:
(1) Valve
(2) Spring seat
(3) Valve spring
(4) Spring retainer

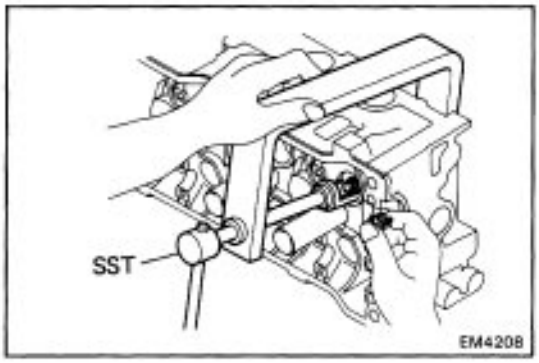

(c) Using SST, compress the valve spring and place the two keepers around the valve stem.
SST 09202–70010

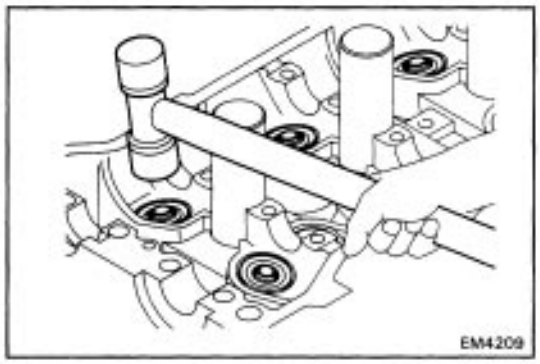

(d) Using a plastic–faced hammer, lightly tap the valve stem tip to assure proper fit.

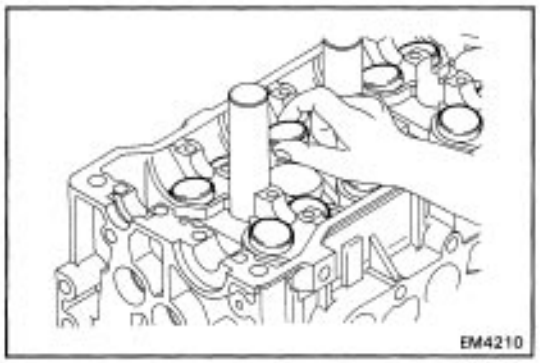

3. INSTALL VALVE LIFTERS AND SHIMS

(a) Install the valve lifter and shim.
(b) Check that the valve lifter rotates smoothly by hand.

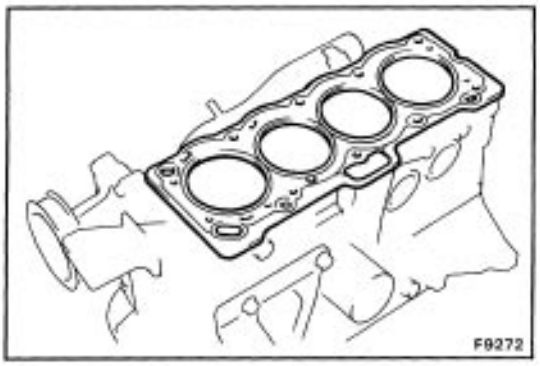

INSTALLATION OF CYLINDER HEAD

(See page EM–54)

1. INSTALL CYLINDER HEAD

(a) Place a new cylinder head gasket in position on the cylinder block.

NOTICE: Be careful of the installation direction.

(b) Place the cylinder head in position on the cylinder head gasket.

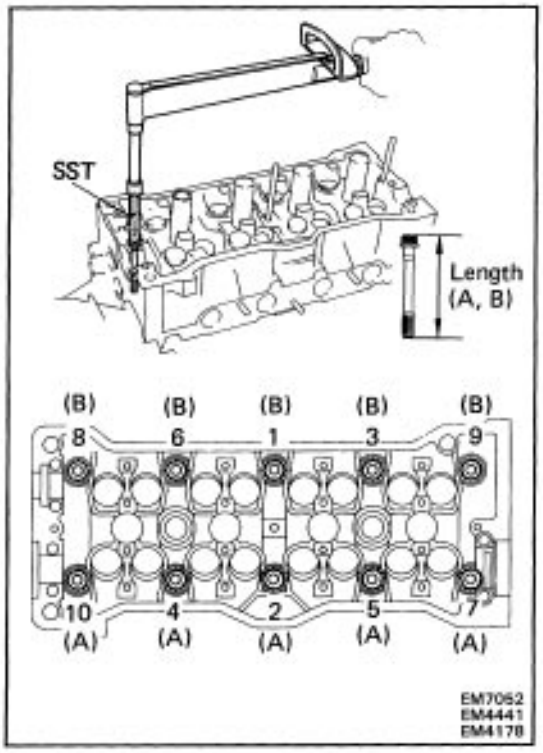

(c) Apply a light coat of engine oil on the threads and under the heads of the cylinder head bolts.

(d) Using SST, install and uniformly tighten the ten cylinder head bolts in several passes in the sequence shown.

SST 09205–16010

Torque: 610 kg–cm (44 ft–lb, 60 N–m)

HINT: Cylinder head bolts in length of 90 mm (3.54 in.) and 108 mm (4.25 in.). Install the 90 mm (3.54 in.) bolt (A) in RH side positions. Install the 108 mm (4.25 in.) bolts (B) in exhaust manifold side positions.

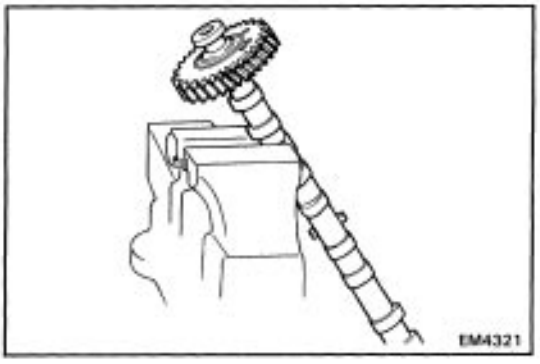

2. ASSEMBLE INTAKE CAMSHAFT

(a) Mount the hexagonal wrench head portion of the camshaft in a vise.

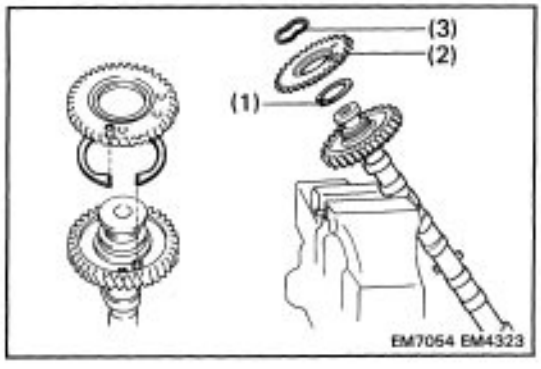

(b) Install the following parts:

(1) Camshaft gear spring
(2) Camshaft sub–gear
(3) Wave washer

HINT: Align the pins on the gears with the gear spring ends.

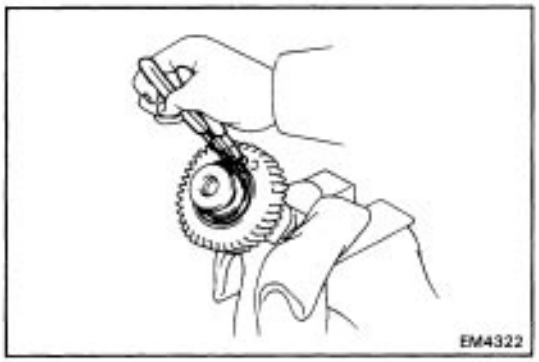

(c) Using snap ring pliers, install the snap ring.

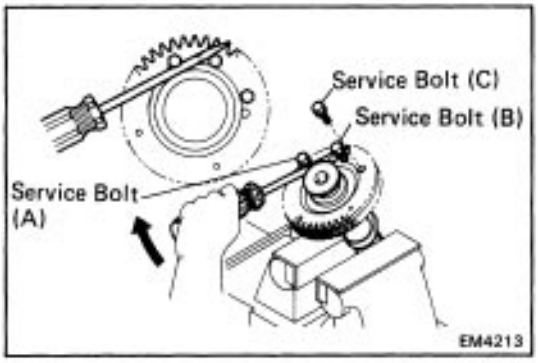

(d) Insert a service bolts (A) and (B) into the service hole of the camshaft sub–gear.
(e) Using a screwdriver, align the holes of the camshaft main gear and sub–gear by turning the camshaft subgear clockwise, and install a service bolt (C).

NOTICE: Be careful not to damage the camshaft.

3. INSTALL INTAKE AND EXHAUST CAMSHAFT

NOTICE: Since the thrust clearance of the camshaft is small, the camshaft must be kept level while it is being installed. If the camshaft is not kept level, the portion of the cylinder head receiving the shaft thrust may crack or be damaged, causing the camshaft to seize or break. To avoid this, the following steps should be carried out.

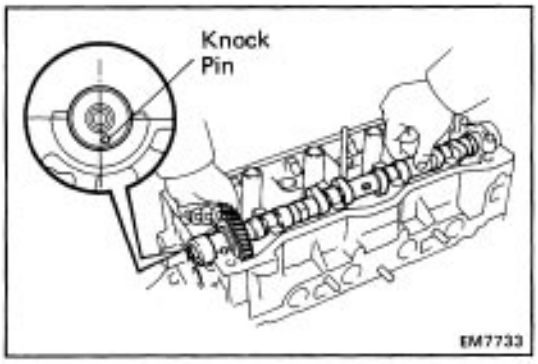

A. Install exhaust camshaft

(a) Apply MP grease to the thrust portion of the camshaft.
(b) Place the intake camshaft so the knock pin is located slightly counterclockwise from the vertical axis of the camshaft.

HINT: The above angle allows the No. 1 and No. 3 cylinder cam lobes of the exhaust camshaft to push their valve lifters evenly.

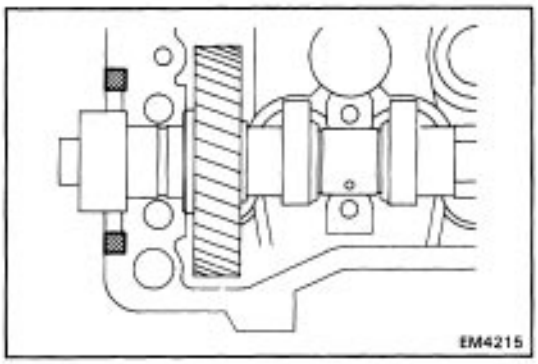

(c) Remove any old packing (FIPG) material.
(d) Apply seal packing to the cylinder head as shown in the figure.

Seal packing: Part No. 08826–00080 or equivalent

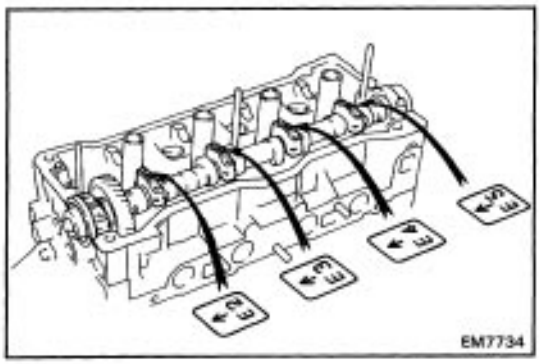

(e) Install the five bearing caps in their proper locations.

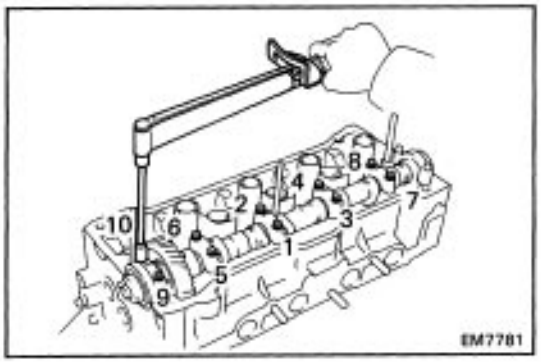

(f) Apply a light coat of engine oil on the threads and under the heads of the bearing cap bolts.
(g) Install and uniformly tighten the ten bearing cap bolts in several passes in the sequence shown.
Torque: 130 kg–cm (9 ft–lb, 13 N–m)

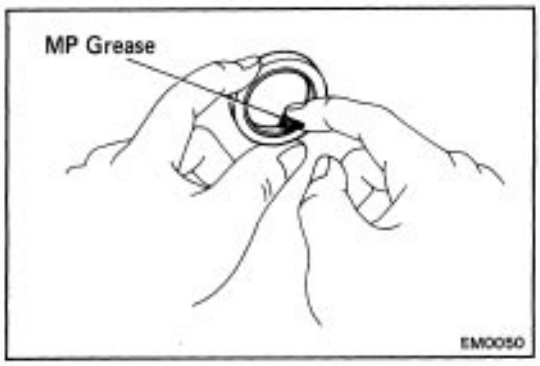

(h) Apply MP grease to a new oil seal lip.

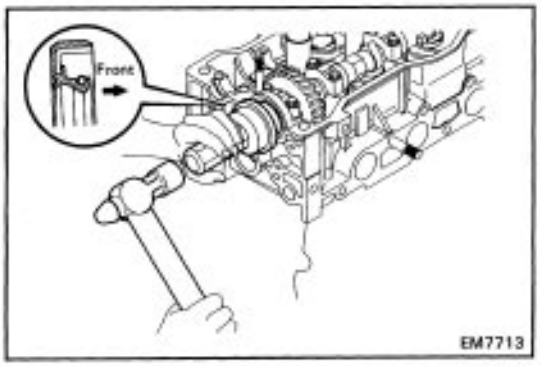

(i) Using SST, tap in the oil seal.
SST 09223–46011
HINT:
- Do not *install the oil seal with the lip facing the wrong direction.
- Insert the oil seal into the deepest part of the cylinder head.

B. Install intake camshaft

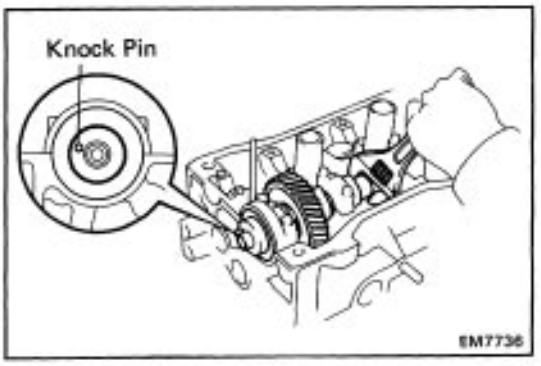

(a) Set the exhaust camshaft so that the knock pin is slightly above the top of the cylinder head.

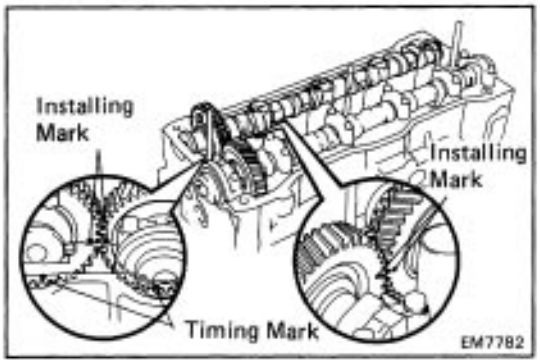

(b) Apply MP grease to the thrust portion of the camshaft.
(c) Engage the intake camshaft gear gear to the exhaust camshaft gear by matching the assembly installation marks on each gear.

NOTICE: There are also timing marks (for TDC) on each gear as shown in the illustration. Do not use these marks.

(d) Roll down the intake camshaft onto the bearing journals while engaging gears with each other.

HINT: The above angle allows the No. 1 and No. 3 cylinder cam lobes of the intake camshaft to push their valve lifters evenly.

(e) Install the four bearing caps in their proper locations.

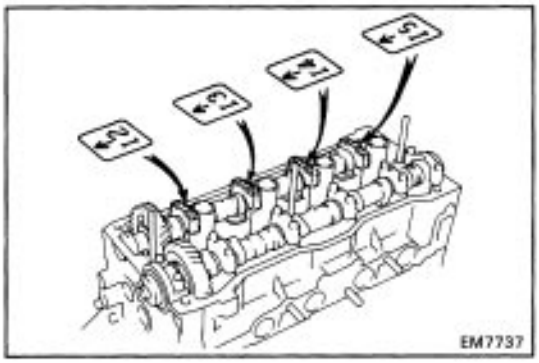

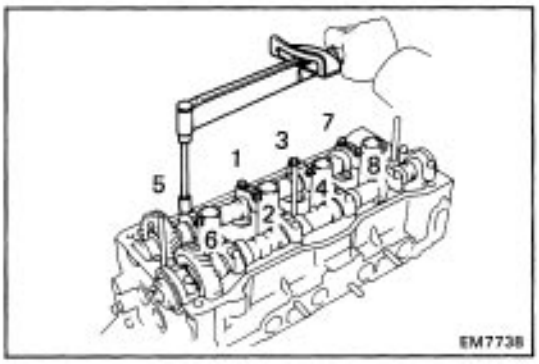

(f) Apply a light coat of engine oil on the threads and under the heads of bearing cap bolts.
(g) Install and uniformly tighten the eight bearing cap bolts in several passes in the sequence shown.

Torque: 130 kg–cm (9 ft–lb, 13 N–m)

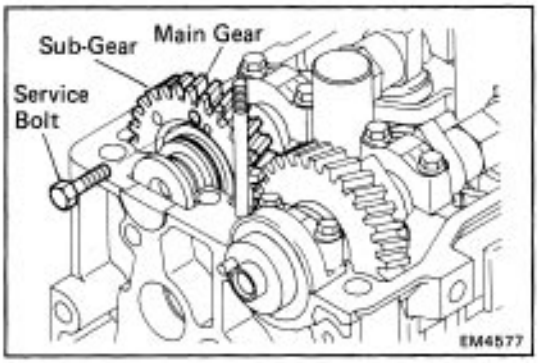

(h) Remove the service bolt (B).

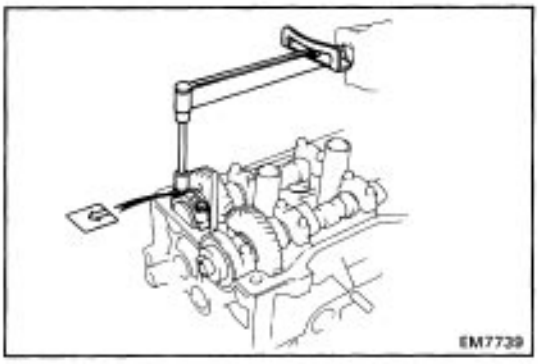

(i) Install the No. 1 bearing cap with the arrow mark facing forward.

NOTICE: If the No.1 bearing cap does not fit properly, push the camshaft gear backwards by prying apart the cylinder head and camshaft gear with a screwdriver.

(j) Apply a light coat of engine oil on the threads and under the heads of bearing cap bolts.
(k) Install and alternately tighten the two bolts in several passes.

Torque: 130 kg–cm (9 ft–lb, 13 N–m)

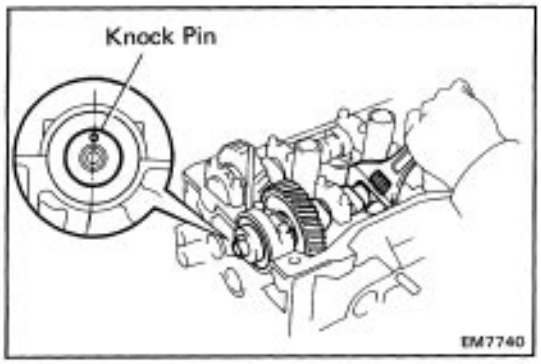

(l) Turn the exhaust camshaft clockwise, and set it with the knock pin facing upward.

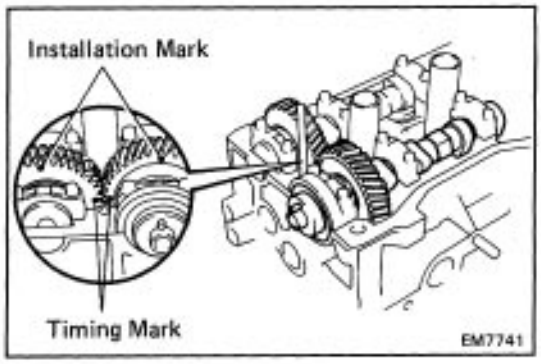

(m) Check that the timing marks of the camshaft gears are aligned.

HINT: The assembly installation marks are on the upside.

4. CHECK AND ADJUST VALVE CLEARANCE

(See page EM–16)

Turn the camshaft and position the cam lobe upward, and check and adjust the valve clearance.

Valve clearance (Cold):

Intake 0.15 – 0.25 mm (0.006 – 0.010 in.)

Exhaust 0.20 – 0.30 mm (0.008 – 0.012 in.)

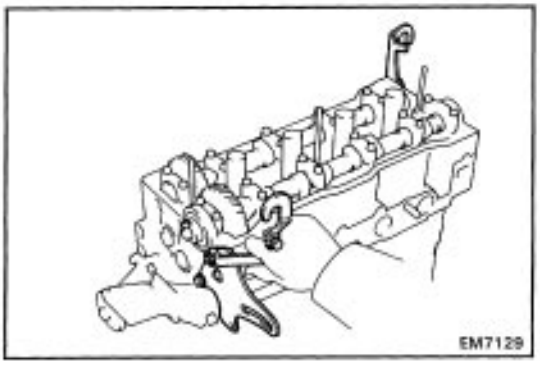

5. INSTALL ENGINE HANGERS

Install the two engine hangers with the bolts.

Torque: 280 kg–cm (20 ft–lb, 27 N–m)

6. INSTALL FAN BELT ADJUSTING BAR

Install the adjusting bar with the two bolts.

Torque: 200 kg–cm (14 ft–lb, 20 N–m)

7. INSTALL CAMSHAFT TIMING PULLEY

(See step 1 on page EM–36)

8. INSTALL TIMING BELT

Align the matchmarks of the timing belt and camshaft timing pulley.

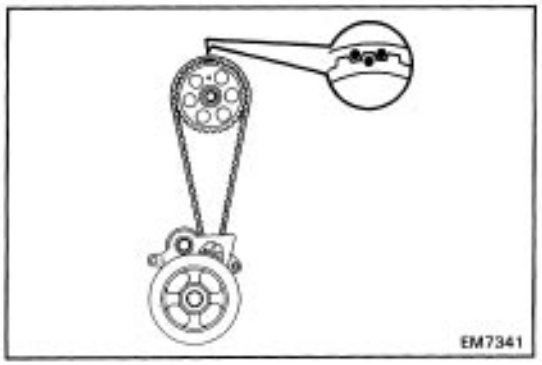

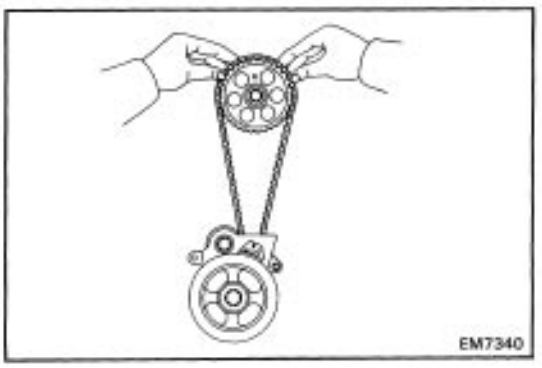

(a) Remove any oil or water on the camshaft timing pulley, and keep it clean.

(b) Install the timing belt, insuring the tension between the crankshaft timing pulley and camshaft timing pulley.

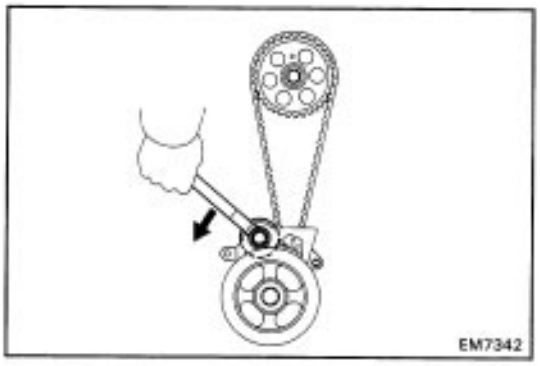

9. CHECK VALVE TIMING

(a) Loosen the idler pulley bolt 1/2 turn.

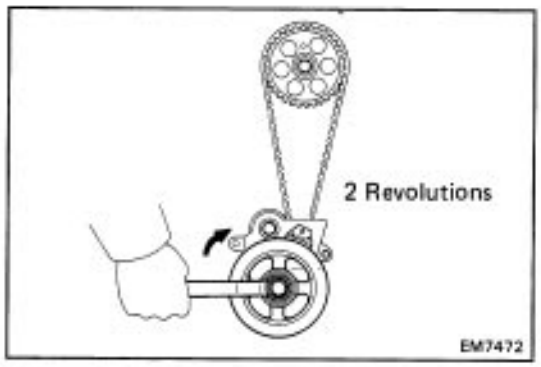

(b) Turn the crankshaft pulley two revolutions from TDC to TDC.

NOTICE: Always turn the crankshaft clockwise.

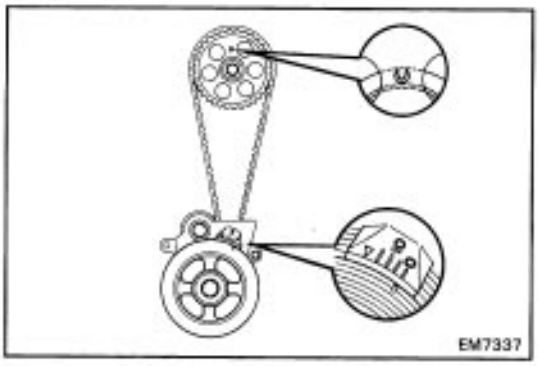

(c) Check that each pulley aligns with the timing marks as shown in the illustration.

If the timing marks does not align, remove the timing belt and reinstall it.

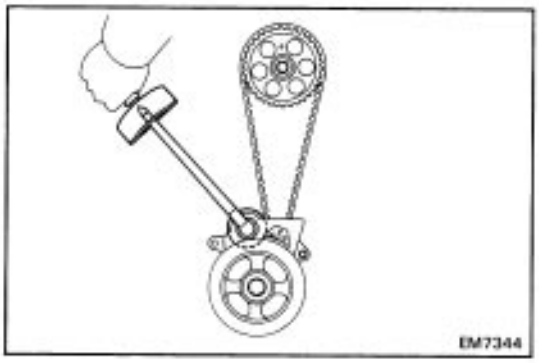

(d) Tighten the idler pulley bolt.

Torque: 375 kg–cm (27 ft–lb, 37 N–m)

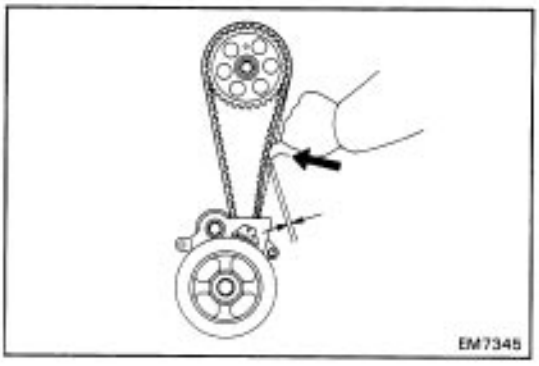

10. (REFERENCE)

INSTALL TIMING BELT DEFLECTION

Check that there is belt tension at the position indicated in the illustration.

Deflection: 5 – 6 mm (0.20 – 0.24 in.)
at 2 kg (4.4 lb, 20 N)

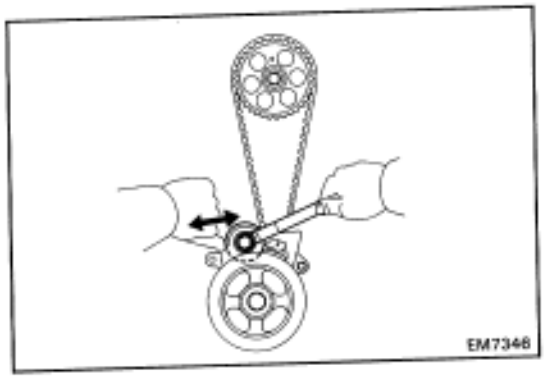

If the deflection is not as specified, adjust with the idler pulley.

11. INSTALL NO.2 AND NO.3 TIMING BELT COVERS

Install the No–2, No.3 timing belt covers and engine wire bracket with the six bolts.

12. INSTALL SPARK PLUGS (See page IG–6)

Torque: 180 kg–cm (13 ft–lb, 18 N–m)

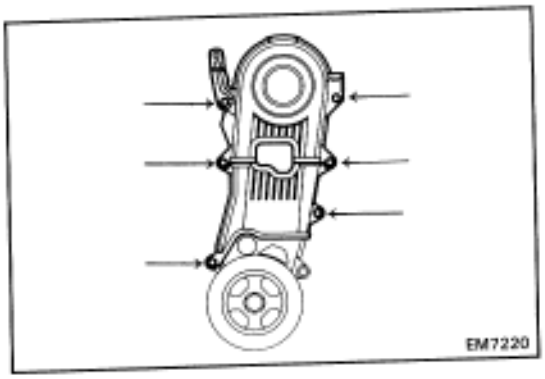

13. INSTALL SEMI–CIRCULAR PLUG

(a) Remove any old packing (F IPG) material.

(b) Apply seal packing to the circular plug.

Seal packing: Part No. 08826–00080 or equivalent

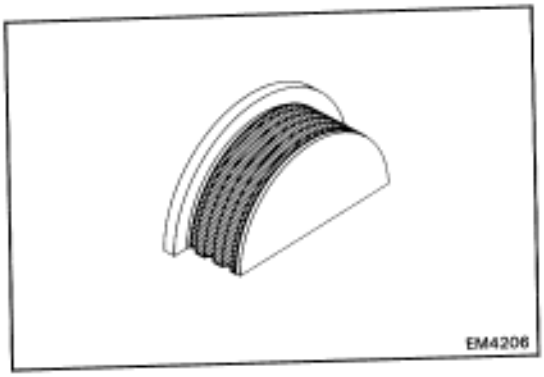

(c) Install the semi–circular plug to the cylinder head.

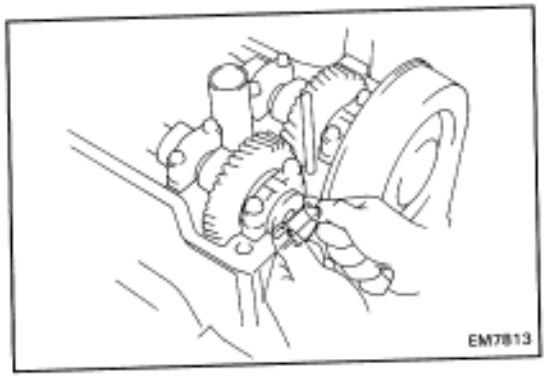

14. INSTALL CYLINDER HEAD COVER

(a) Remove any old packing (FIPG) material.

(b) Apply seal packing to the cylinder head as shown the figure.

Seal packing: Part No. 08826–00080 or equivalent

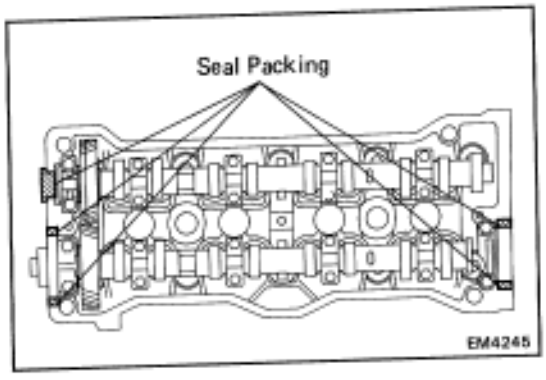

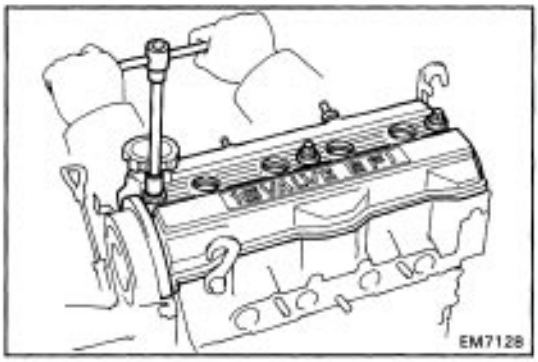

(c) Install the gasket to the head cover.
(d) Install the head cover with the three grommets and cap nuts.
Torque: 80 kg–cm (69 in.–lb, 7.8 N–m)

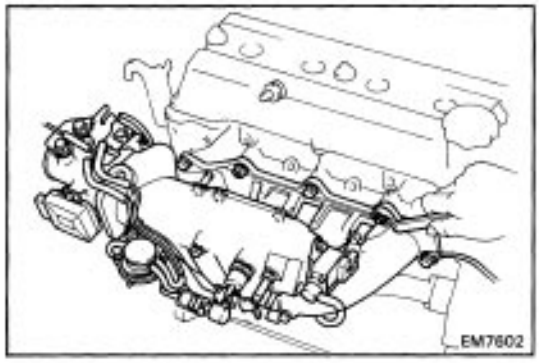

15. INSTALL INTAKE MANIFOLD
(a) Install a new gasket and the intake manifold with the six bolts, ground strap and two nuts.
Torque: 195 kg–cm (14 ft–lb, 19 N–m)

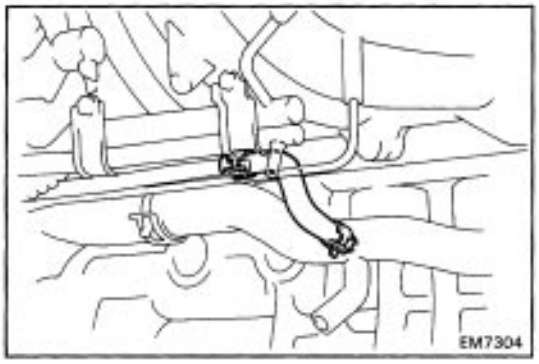

(b) Connect the water by–pass hose to the air pipe.

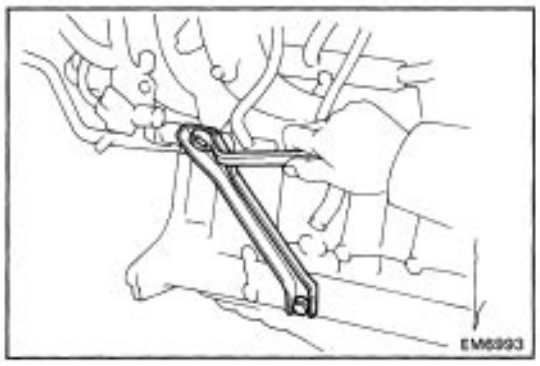

(c) Install the manifold stay with the two bolts.
Torque:
12 mm bolt head 195 kg–cm (14 ft–lb, 19 N–m)
14 mm bolt head 400 kg–cm (29 ft–lb, 39 N–m)

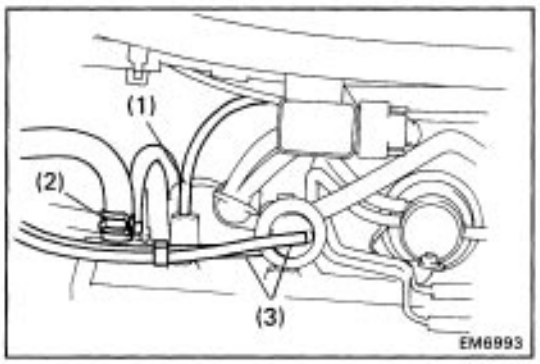

16. CONNECT FOLLOWING HOSES
(a) Connect the fuel return hose to the air pipe.
(b) (wI PS and/or with A/C)
Connect the air hoses to the air pipe.
(c) Connect the following vacuum hoses to the intake chamber:
(1) Vacuum sensor hose to gas filter.
(2) Brake booster vacuum hose
(3) (with A/C)
Two A/C vacuum hoses to actuator

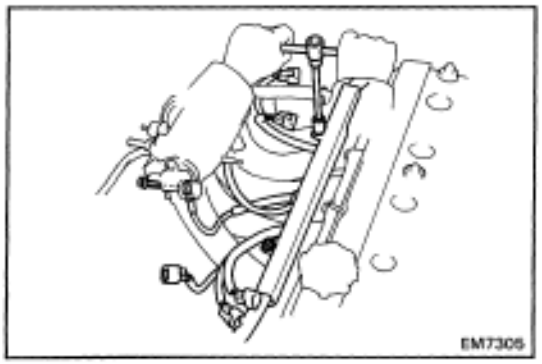

17. CONNECT ENGINE WIRE TO INTAKE MANIFOLD

(a) Connect the engine wire to the intake manifold with the two nuts.

(b) Connect the wire clamp to the vacuum pipe.

(c) Connect the following connectors and wire:

- Ground strap
- ISC valve connector
- Cold start injector connector
- Throttle position sensor connector
- (Calif. and 4WD)
  EGR VSV connector
- (California)
  EGR gas temperature sensor connector
- Vacuum sensor connector

18. CONNECT ENGINE WIRE TO NO.3 TIMING BELT COVER

(See step 13 on page EM–39)

19. INSTALL DELIVERY PIPE AND INJECTORS

(See step 2 to 5 on page FI–58)

20. INSTALL WATER INLET WITH HOUSING

(a) Remove any old packing material and be careful not to drop any oil on the contact surfaces of the water inlet housing and cylinder head.

- Using a razor blade and gasket scraper, remove all the packing (F IPG) material from the gasket surfaces.

NOTICE: Do not use a solvent which will affect painted surfaces.

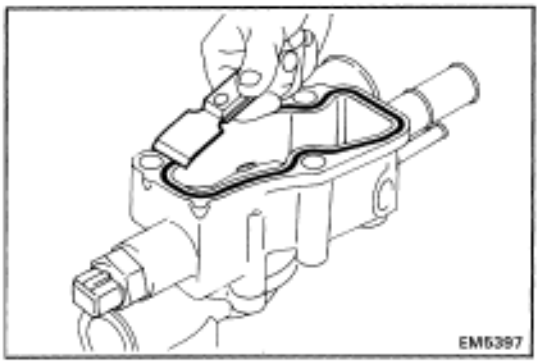

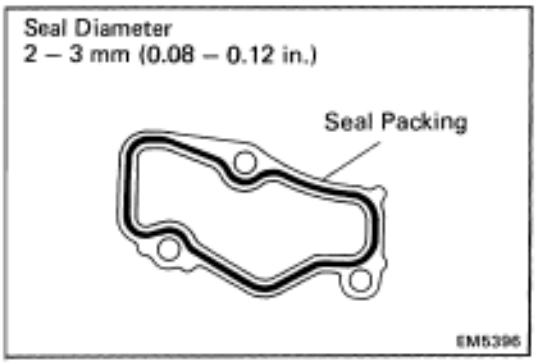

(b) Apply seal packing No. 1282–B to the water inlet housing as shown in the figure.

Seal packing: Part No. 08826–00100 or equivalent

- Install a nozzle that has been cut to a 2 mm (0.08 in.) opening.

HINT: Avoid applying an excessive amount to the surface. Be especially careful near oil passages.

- Parts must be assembled within 15 minutes of application. Otherwise, the material must be removed and reapplied.
- Immediately remove the nozzle from the tube and reinstall the cap.

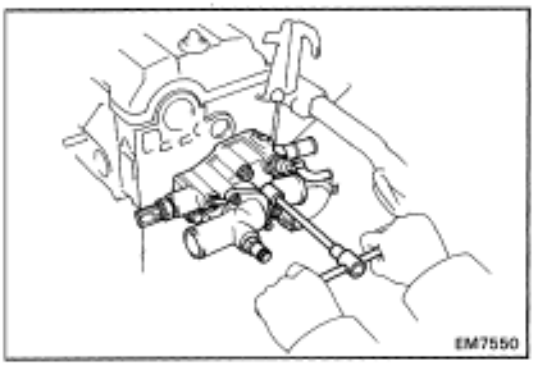

(c) Install the water inlet housing with the bolt and two nuts.

Torque: 200 kg–cm (14 ft–lb, 20 N–m)

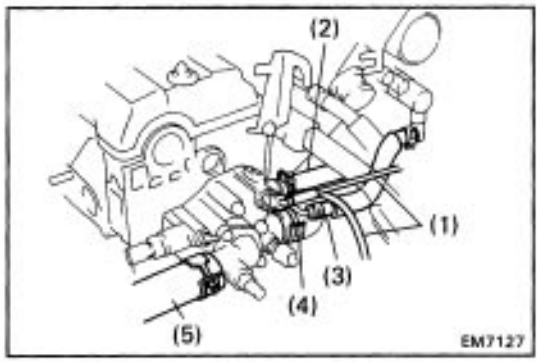

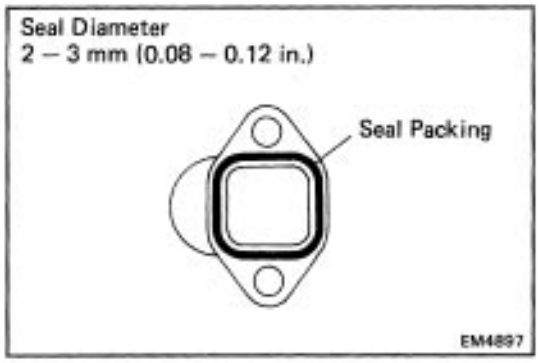

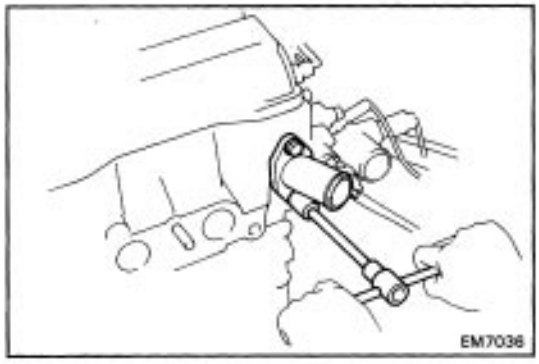

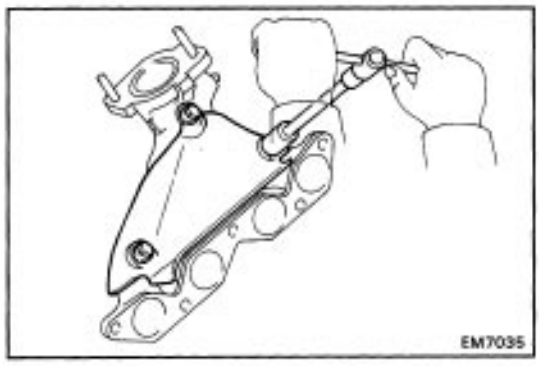

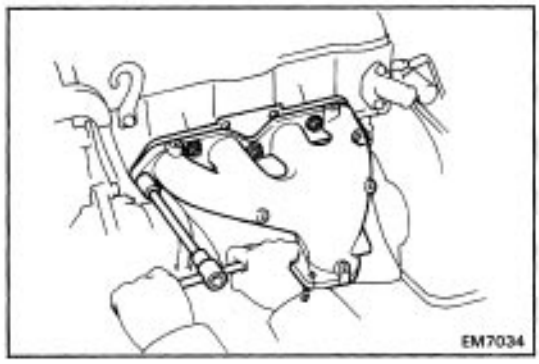

(d) Connect the following hoses:
- (1) Two EVAP BVSV vacuum hoses
- (2) Heater water hose
- (3) Water by–pass hose
- (4) Inlet water hose
- (5) Radiator outlet hose

(e) Connect the following connectors:
- Water temperature sender gauge connector
- Water temperature sensor connector
- Start injector time switch connector

21. INSTALL WATER OUTLET

(a) Remove any old packing (FIPG) material and be careful not to drop any oil on the contact surfaces of the water outlet and cylinder head.
- Using a razor blade and gasket scraper, remove all the oil packing (FIPG) material from the gasket surfaces and sealing groove.
- Thoroughly clean all components to remove all the loose material.
- Using a non–residue, clean both sealing surfaces.

(b) Apply seal packing to the water outlet groove.

Seal packing: Part No. 08826–00100 or equivalent
- **Install a nozzle that has been cut out a 2 – 3 mm (0.08 – 0.12 in.) opening.**

HINT: Avoid applying an excessive amount to the surface.
- Parts must be assembled within 15 minutes of application. Otherwise the material must be removed and reapplied.
- Immediately remove nozzle from the tube and reinstall cap.

(c) Install the water outlet with the two bolts.

Torque: 150 kg–cm (11 ft–lb, 15 N – r n)

22. INSTALL EXHAUST MANIFOLD

(a) Install the lower heat insulator to the exhaust manifold with the three bolts.

(b) Install a new gasket and the exhaust manifold with the two bolts and three new nuts.

Torque: 250 kg–cm (18 ft–lb, 25 N–m)

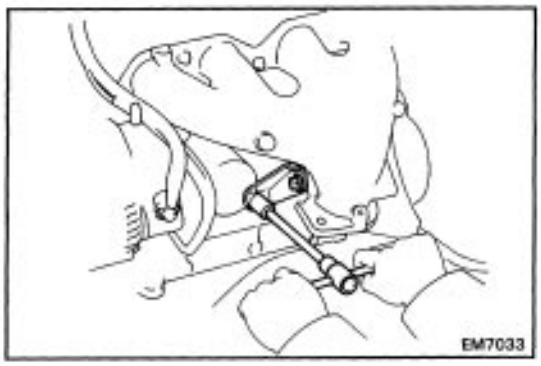

(c) Install the manifold stay with the two bolts.
Torque: 400 kg–cm (29 ft–lb, 39 N–m)

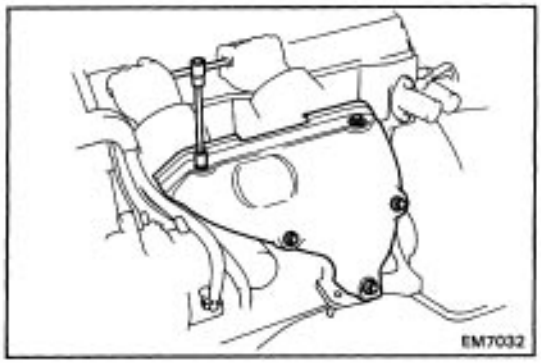

(d) Install the upper heat insulator with the five bolts.

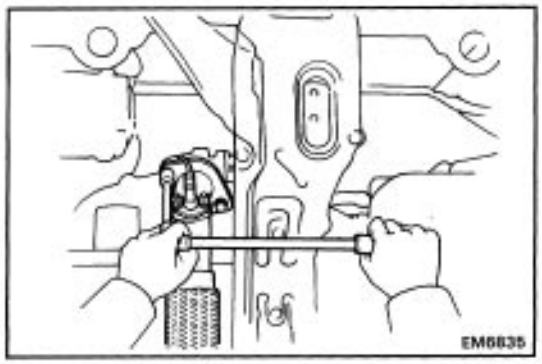

23. CONNECT EXHAUST PIPE TO EXHAUST MANIFOLD
(a) Install a new gasket to the exhaust pipe.
(b) Connect the exhaust pipe to the manifold.
Install and torque two new nuts.
Torque: 630 kg–cm (46 ft–lb, 62 N–m)



(c) Install the two nuts to the pipe clamp.
Torque: 195 kg–cm (14 ft–lb, 19 N–m)

24. INSTALL IIA (See page IG–15)

25. (w/ CRUISE CONTROL)
INSTALL CRUISE CONTROL ACTUATOR CABLE

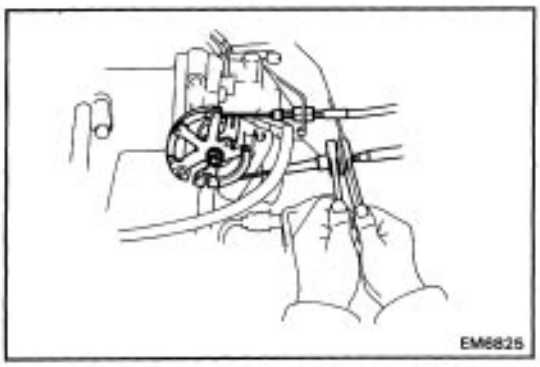

26. (A/T)
CONNECT THROTTLE CABLE

27. CONNECT ACCELERATOR WIRE

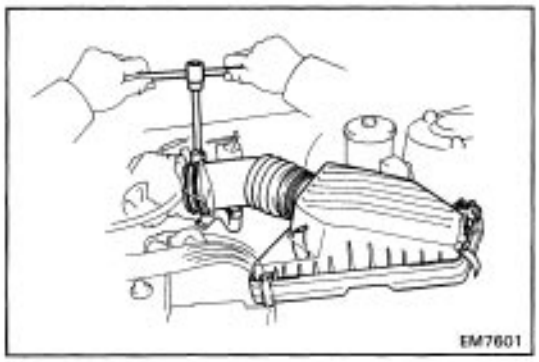

28. INSTALL AIR CLEANER HOSE WITH CAP

(a) Connect the air cleaner hose, and install the air cleaner cap with the four clips.
(b) Tighten the air cleaner hose clamp bolt.
(c) Connect the air hose to the air pipe.
(d) Connect the air intake temp. sensor connector to the air cleaner cap.
(e) Connect the vacuum hose to the charcoal canister.

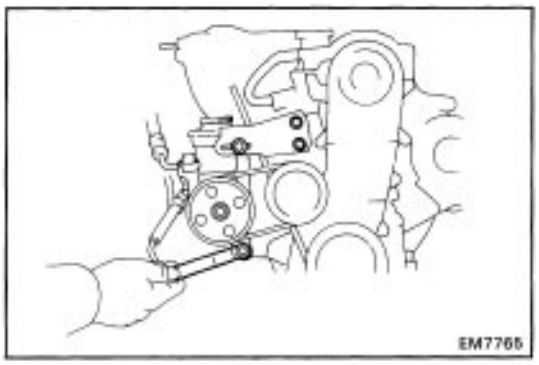

29. (w/ PS)

CONNECT PS PUMP

(a) Install the adjusting bar with the two bolts.
(b) Temporarily install the PS pump and drive belt with the adjusting bolt.
(c) Install the pivot bolt. Torque the bolts.

Torque: 400 kg–cm (29 ft–lb, 39 N–m)

30. ADJUST DRIVE BELTS

(See step on 18 page EM–40)

31. REFILL WITH COOLANT (See page CO–5)

Capacity (wl heater):
M/T (Ex. AE92L–ACMXKK)
5.6 liters (5.9 US qts, 4.9 Imp. qts)
M/T (AE92L–ACMXKK)
6.2 liters (6.5 US qts, 5.5 Imp. qts)
A/T 6.1 liters (6.4 US qts, 5.4 Imp. qts)

32. CONNECT CABLE TO NEGATIVE TERMINAL OF BATTERY

33. START ENGINE AND CHECK FOR LEAKS

Warm up the engine and inspect for leaks.

34. INSTALL RH ENGINE UNDER COVER

35. CHECK IGNITION TIMING (See page IG–16)

Ignition timing: 10° BTDC @ idle
(w/ connected TE1 and E1)

36. RECHECK COOLANT AND OIL LEVELS

CYLINDER HEAD (4A–GE)

COMPONENTS

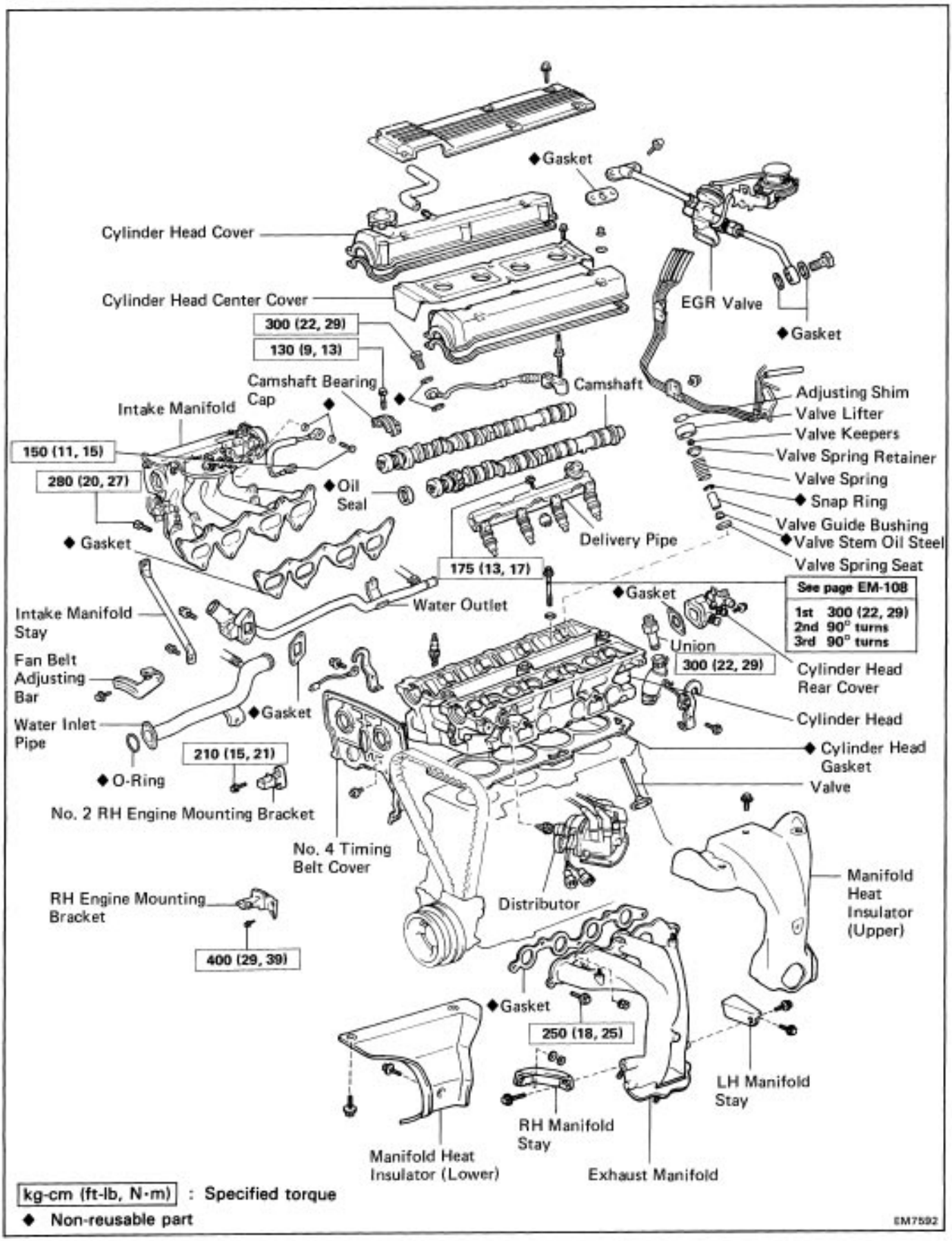

REMOVAL OF CYLINDER HEAD

(See page EM–89)

1. DISCONNECT CABLE FROM NEGATIVE TERMINAL OF BATTERY

2. REMOVE RH ENGINE UNDER COVER

3. DRAIN ENGINE COOLANT

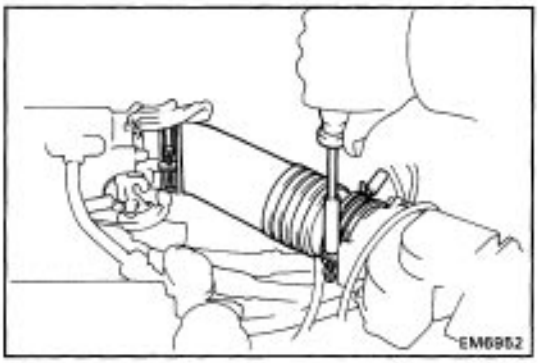

4. REMOVE AIR CLEANER HOSE

(a) Disconnect the vacuum hose from the air cleaner hose.

(b) (with A/C)

Disconnect the air hose.

(c) Loosen the two clamp bolts and remove the air cleaner hose.

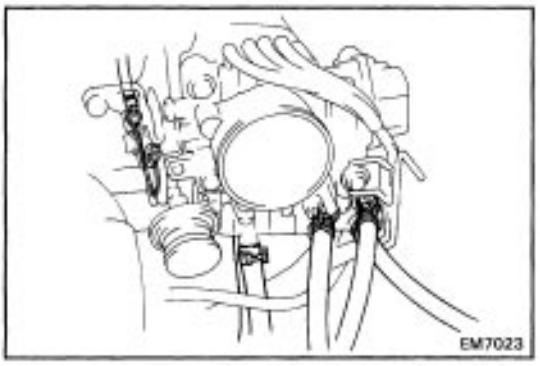

5. (w/ PS)

DISCONNECT AIR HOSES

6. DISCONNECT WATER BY–PASS HOSES

7. DISCONNECT ACCELERATOR WIRE FROM BRACKET

8. REMOVE WASHER TANK

9. DISCONNECT BRAKE VACUUM HOSE

10. (w/ CRUISE CONTROL)

REMOVE CRUISE CONTROL ACTUATOR

(See step 5 on page EM–41)

11. REMOVE RADIATOR INLET HOSE

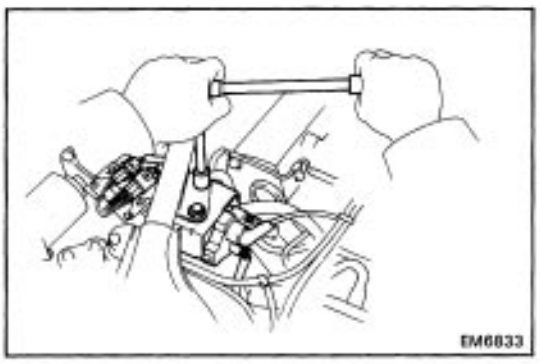

12. REMOVE IGNITION COIL

(a) Disconnect the ignition coil connectors.

(b) Disconnect the high–tension cord.

(c) Remove the two bolts and the ignition coil with bracket.

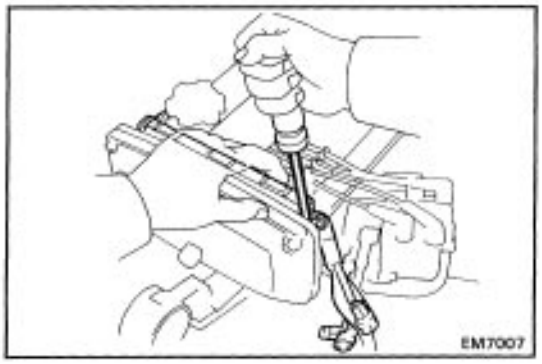

13. DISCONNECT ENGINE WIRE FROM NO.4 TIMING BELT COVER

(a) Disconnect the following connectors:

- Distributor wire connectors
- Oil pressure sender gauge connector
- (with A/C)
  Compressor connector

(b) Disconnect the engine wire from the timing belt cover.

14. REMOVE DISTRIBUTOR (Seepage IG–17)

15. REMOVE EGR VALVE AND MODULATOR

(a) (California)
Disconnect the EGR gas temp. sensor connector.

(b) Disconnect the vacuum hoses from the vacuum pipe.

(c) Remove the bolt and EGR vacuum modulator.

(d) Remove the union bolt, four bolts, the EGR valve, pipe assembly and gaskets.

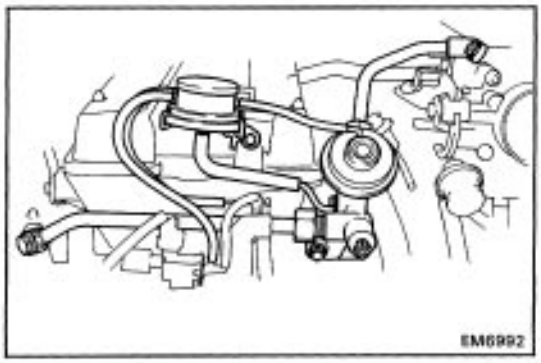

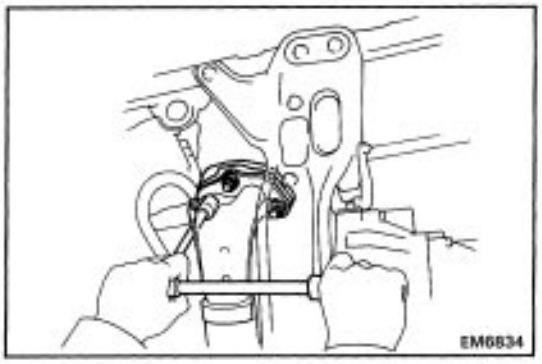

16. REMOVE FRONT EXHAUST PIPE FROM EXHAUST MANIFOLD

(a) Remove the two bolts from the pipe clamp.

(b) Remove the three nuts, and disconnect the exhaust pipe from the manifold.

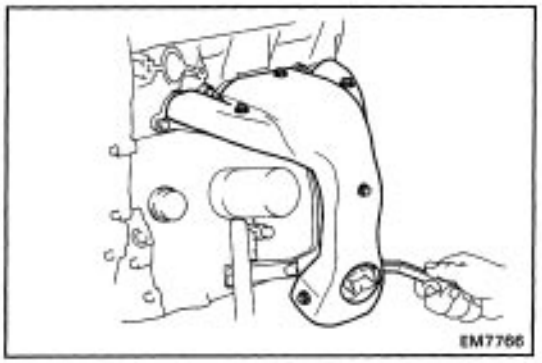

17. REMOVE EXHAUST MANIFOLD

(a) Remove the six bolts and upper heat insulator.

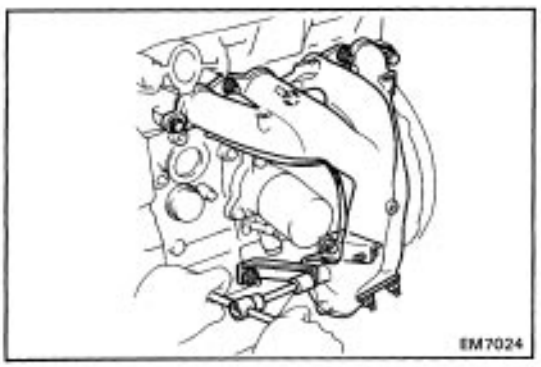

(b) Remove the three bolts, nut, RH and LH manifold stays.

(c) Remove the three bolts, two nuts exhaust manifold and gasket.

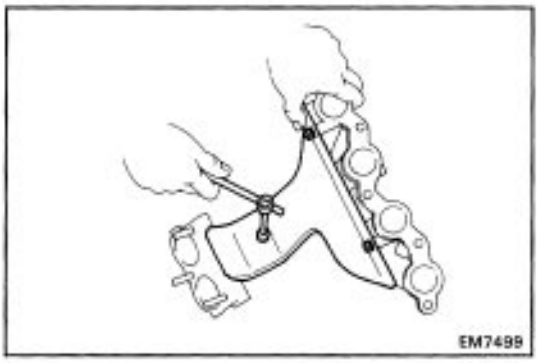

(d) Remove the three bolts and lower heat insulator.

18. REMOVE PCV HOSE

19. REMOVE COLD START INJECTOR PIPE

(See steps 2 and 3 on page FI–132)

20. REMOVE DELIVERY PIPE AND INJECTORS

(See steps 4 to 6 on page FI–137)

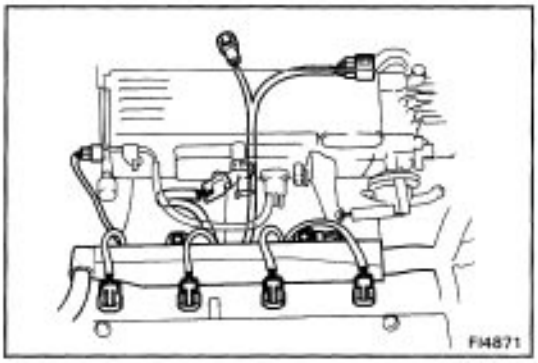

21. DISCONNECT ENGINE WIRE FROM INTAKE MANIFOLD

(a) Disconnect the following connectors:

- Knock sensor connector
- Throttle position sensor connector
- Cold start injector connector
- Fuel pressure VSV connector

(b) Remove the two bolts, and disconnect the engine wire from the intake manifold.

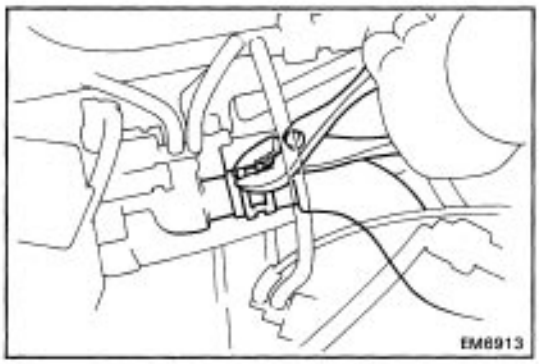

22. REMOVE VACUUM PIPE AND CYLINDER HEAD REAR COVER

(a) Disconnect heater hose from the cylinder head rear cover.

(b) Disconnect the following connectors:

- Start injector time switch connector
- Water temp. sensor connector
- EGR VSV connector

(c) Remove the vacuum hoses from the vacuum pipe.

(d) Remove the four bolts, vacuum pipe, cylinder head rear cover and wire clamp.

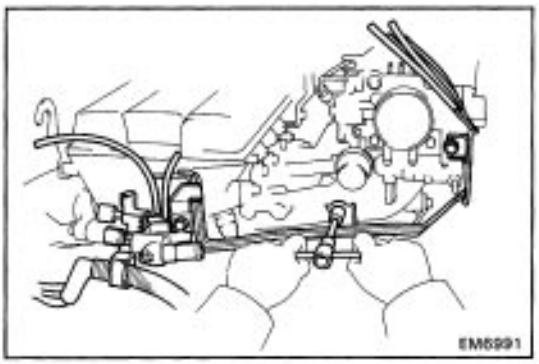

23. (w/ PS AND/OR with A/C)
REMOVE PS AND/OR A/C DRIVE BELT
(See step 10 on page EM–43)

24. LOOSEN WATER PUMP PULLEY BOLTS AND REMOVE ALTERNATOR DRIVE BELT
(See step 11 on page EM–43)

25. REMOVE WATER OUTLET AND BY–PASS PIPE

(a) Remove the three bolts and alternator drive belt adjusting bar.

(b) Remove the three bolts, the water outlet, by–pass pipe assembly and gasket.

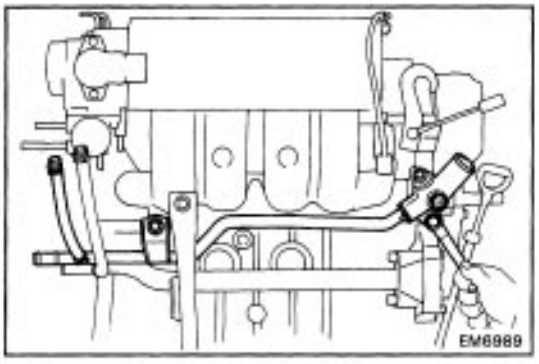

26. REMOVE WATER INLET PIPE
(See step 6 on page CO–7)

27. REMOVE RH ENGINE MOUNTING INSULATOR
(See step 12 on page EM–43)

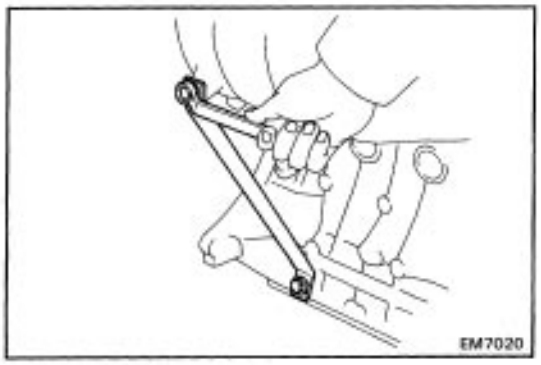

28. REMOVE INTAKE MANIFOLD

(a) Remove the two bolts and manifold stay.

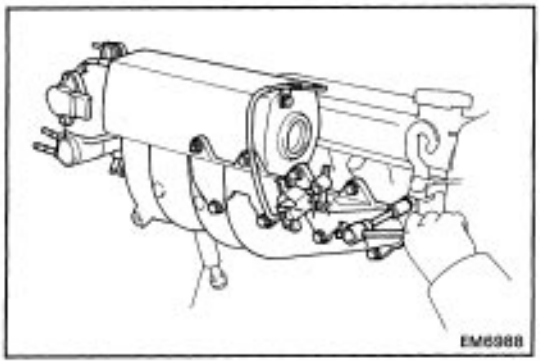

(b) Remove the seven bolts, two nuts, intake manifold and gasket.

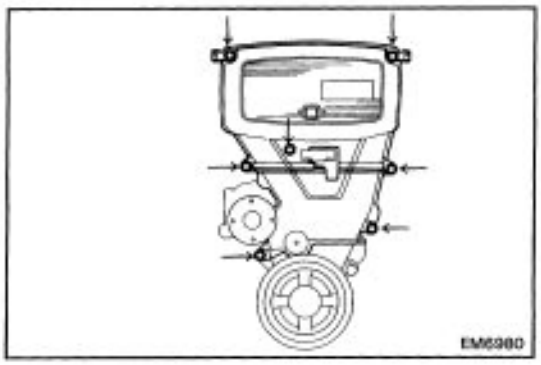

29. REMOVE WATER PUMP PULLEY

Remove the set bolts and water pump pulley.

30. REMOVE NO.3 AND NO.2 TIMING BELT COVERS

(a) (with A/C)

Remove the A/C idle pulley

(b) Remove the seven bolts cord support plate, No.3, No.2 belt covers and gaskets.

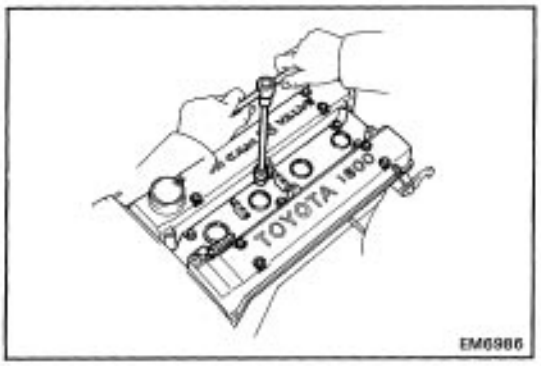

31. REMOVE CYLINDER HEAD COVERS

(a) Remove the four bolts, center cover and gasket.

(b) Remove the eight cap nuts, seal washers, two head covers and gaskets.

32. REMOVE SPARK PLUGS (See page IG–10)

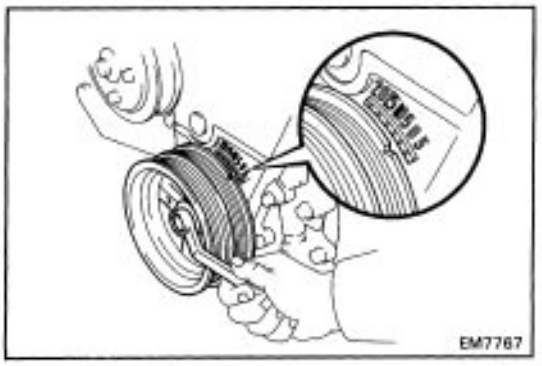

33. SET NO. 1 CYLINDER TO TDC/COMPRESSION

(a) Turn the crankshaft pulley and align its groove with the timing mark ”O” of the No. 1 timing belt cover.

(b) Check that the valve lifters on the No. 1 cylinder are loose and valve lifters on the No.4 cylinder are tight.

If not, turn the crankshaft one revolution (360˚).

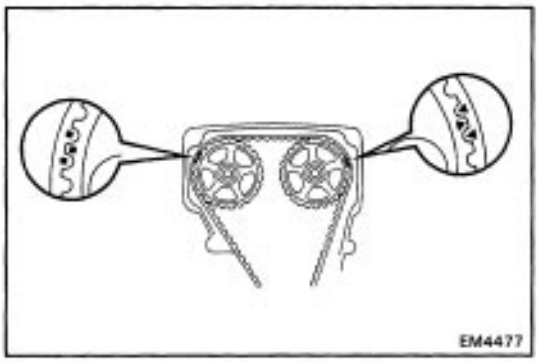

34. DISCONNECT TIMING BELT FROM CAMSHAFT TIMING PULLEYS

(a) Place matchmarks on the camshaft timing pulleys and timing belt.

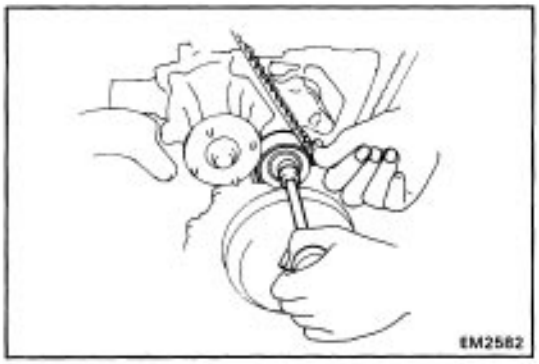

(b) Loosen the idler pulley bolt and shift the pulley toward the left as far as it will go, temporarily tighten it.

(c) Remove the timing belt from the camshaft timing pulleys.

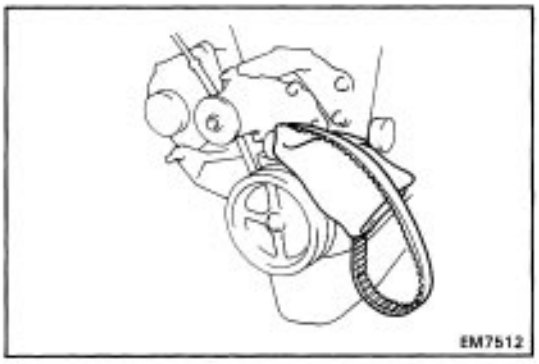

NOTICE:

- **Support the belt so that the meshing of the crankshaft timing pulley and timing belt does not shift.**
- **Be careful not to drop anything inside the timing belt cover.**
- **Do not allow the belt to come into contact with oil, water or dust.**

35. REMOVE CAMSHAFT TIMING PULLEYS

(See step 20 on page EM–45)

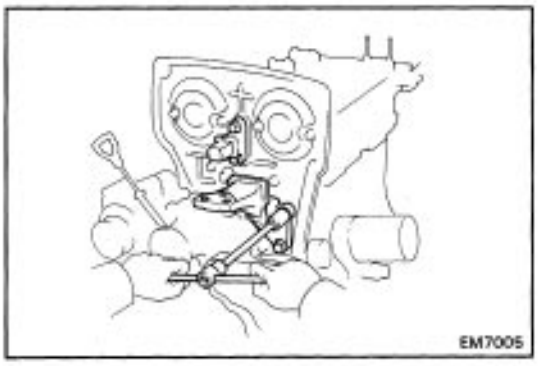

36. REMOVE RH MOUNTING BRACKETS

(a) Remove the three bolts and bracket.

(b) Remove the two bolts and No.2 bracket.

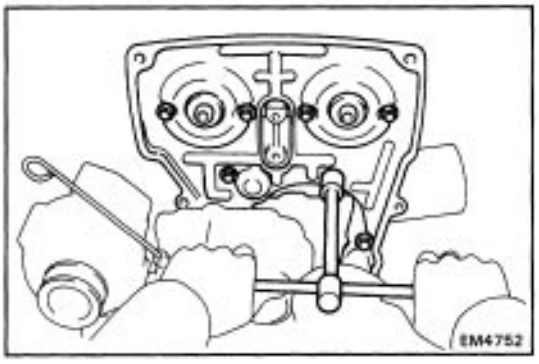

37. REMOVE NO.4 TIMING BELT COVER

Remove the seven bolts and belt cover.

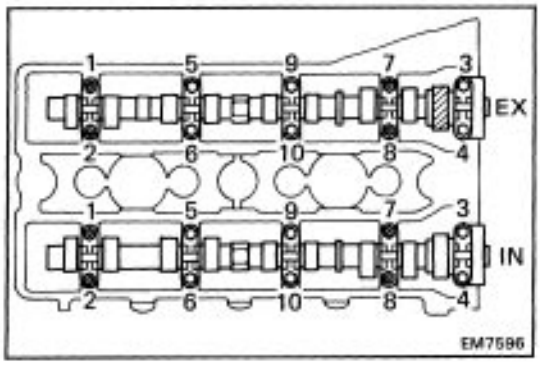

38. REMOVE CAMSHAFTS

(a) Uniformly loosen and remove the bearing cap bolts in several passes, in the sequence shown.

(b) Remove the bearing caps, oil seal and camshaft.

HINT: Arrange the intake and exhaust camshafts.

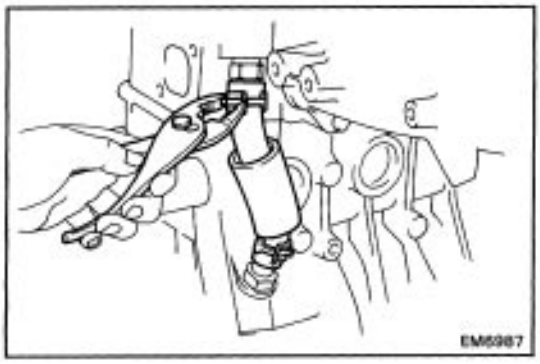

39. REMOVE NO.2 PCV HOSE

Remove the two clamps, disconnect the PCV hose from the cylinder head.

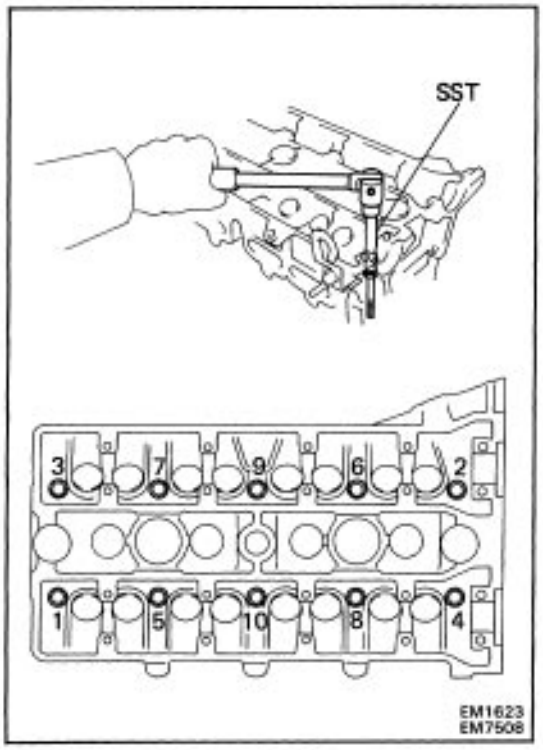

40. REMOVE CYLINDER HEAD

(a) Using SST, uniformly loosen and remove the ten cylinder head bolts in several passes, in the sequence shown.

SST 09205–16010

NOTICE: Head warpage or cracking could result from removing bolts in an incorrect order.

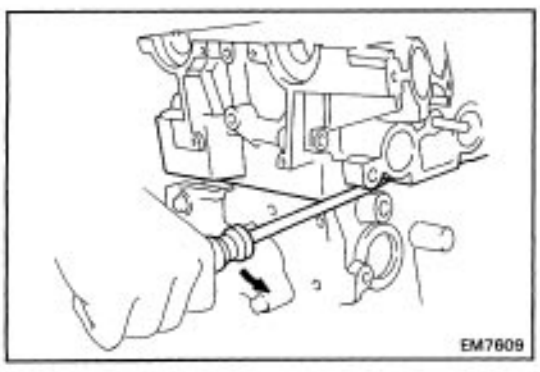

(b) Lift the cylinder head from the dowels on the cylinder block and place the head on wooden blocks on a bench.

HINT: If the cylinder head is difficult to lift off, pry with a screwdriver between the cylinder head and block saliences.

NOTICE: Be careful not to damage the cylinder head and cylinder block surfaces of the cylinder head gasket side.

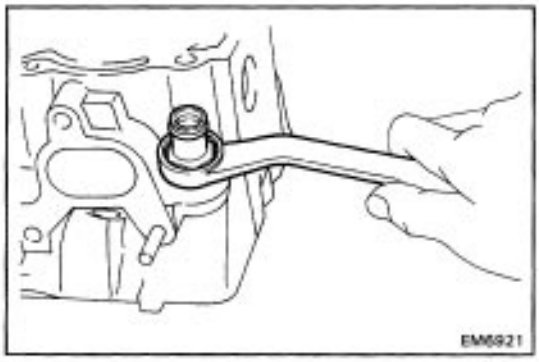

41. REMOVE ENGINE HANGERS

Remove the two bolts, ground strap connector and two hangers.

42. REMOVE UNION

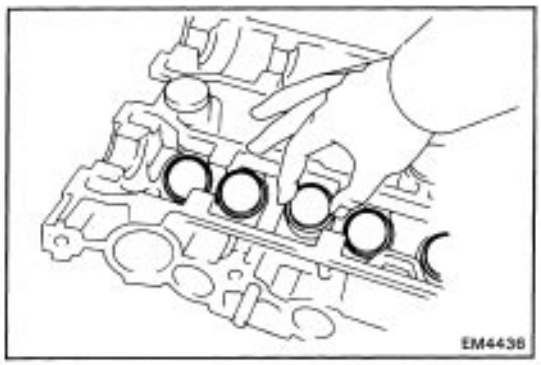

DISASSEMBLY OF CYLINDER HEAD

(See page EM–89)

1. REMOVE VALVE LIFTERS AND SHIMS

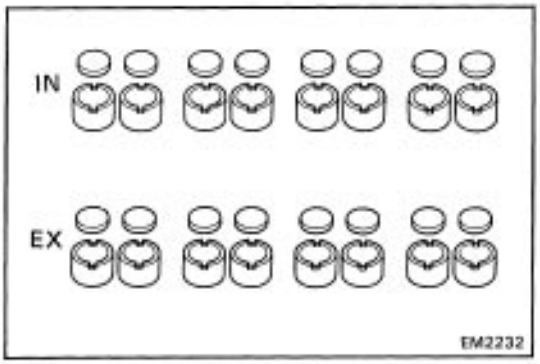

HINT: Arrange the valve lifters and shims in correct order.

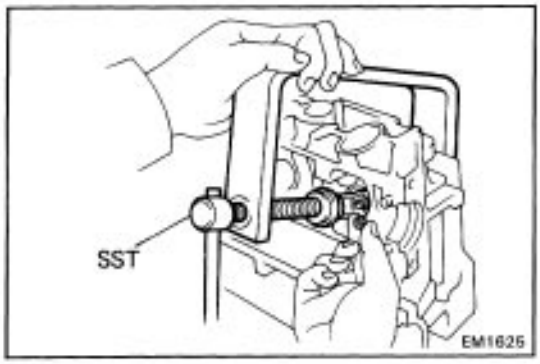

2. REMOVE VALVES

(a) Using SST, compress the valve spring and remove the two keepers.

SST 09202–70010

(b) Remove the spring retainer, valve spring, valve and spring seat.

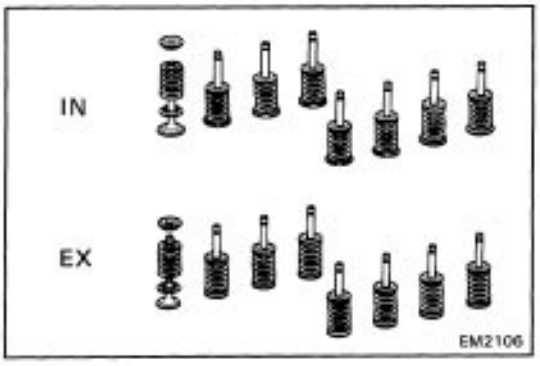

HINT: Arrange the valves, valve springs, spring seats and spring retainers in correct order.

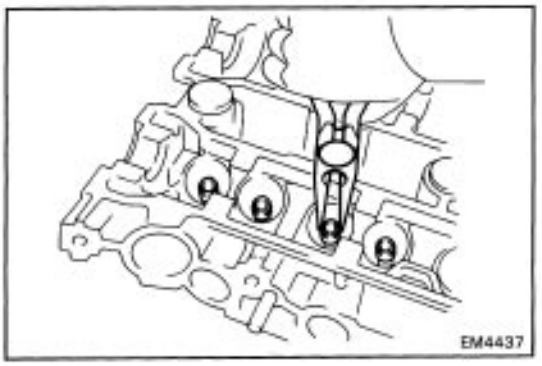

(c) Using needle–nose pliers, remove the oil seal.

INSPECTION, CLEANING AND REPAIR OF CYLINDER HEAD COMPONENTS

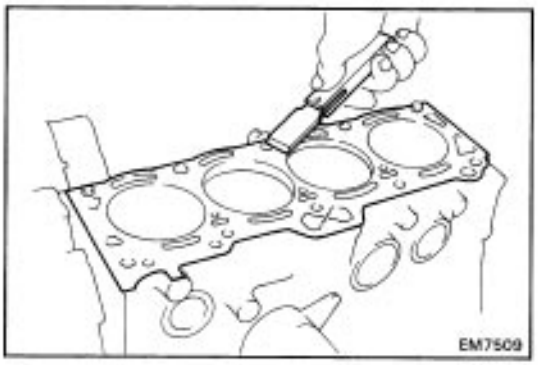

1. CLEAN TOP OF PISTONS AND TOP OF BLOCK

(a) Turn the crankshaft and bring each piston to top dead center (TDC). Using a gasket scraper, remove all the carbon from the piston top.

(b) Remove all the gasket material from the top of the cylinder block.

(c) Using compressed air, blow carbon and oil from the bolt holes.

CAUTION: Protect your eyes when using high pressure air.

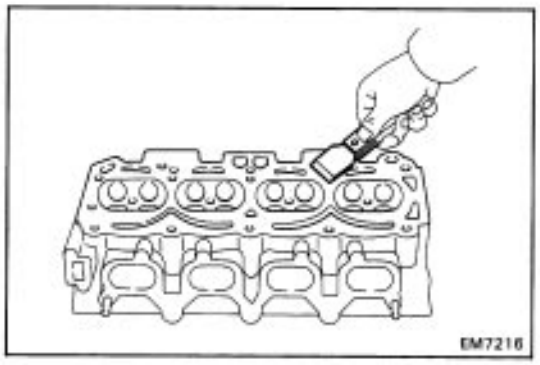

2. REMOVE GASKET MATERIAL

Using a gasket scraper, remove all the gasket material from the manifold and cylinder head surface.

NOTICE: Be careful not scratch the surfaces.

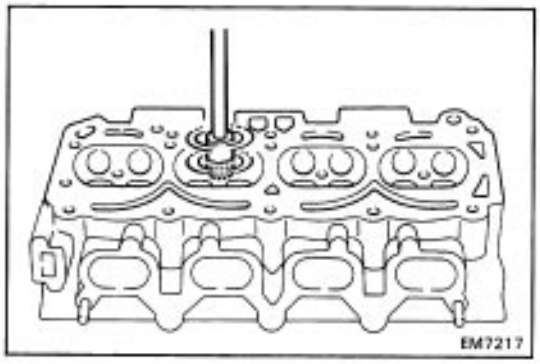

3. CLEAN COMBUSTION CHAMBERS

Using a wire brush, remove all the carbon from the combustion chambers.

NOTICE: Be careful not to scratch the head gasket contact surface.

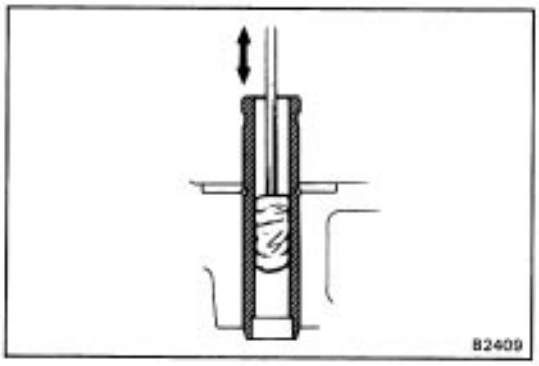

4. CLEAN VALVE GUIDE BUSHINGS

Using a valve guide bushing brush and solvent, clean all the guide bushings.

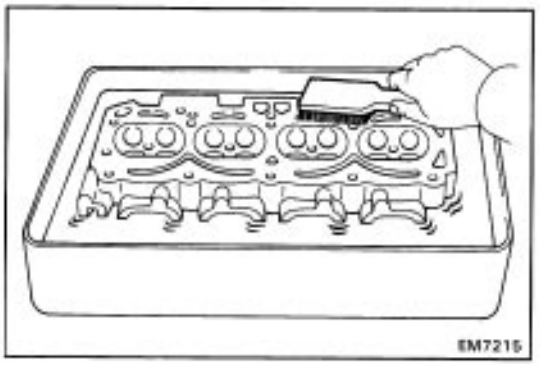

5. CLEAN CYLINDER HEAD

Using a soft brush and solvent, thoroughly clean cylinder head.

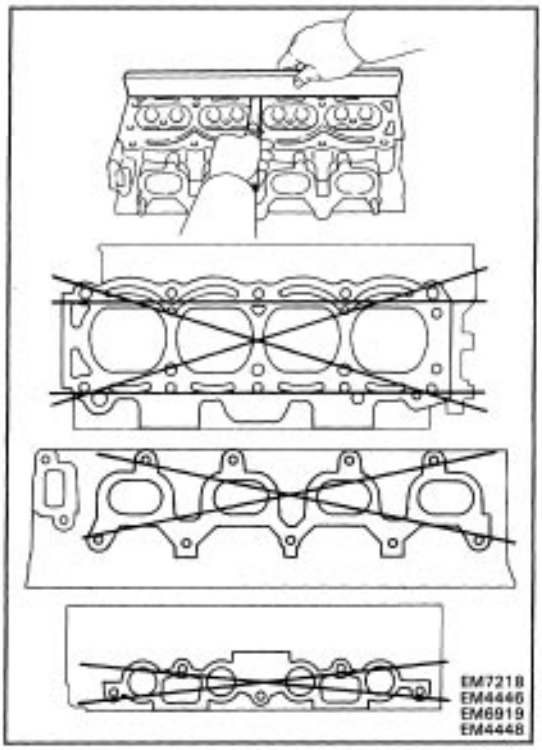

6. INSPECT CYLINDER HEAD FOR FLATNESS

Using a precision straight edge and feeler gauge, measure the surfaces contacting the cylinder block manifolds for warpage.

Maximum warpage:

Cylinder block side 0.05 mm (0.0020 in.)
Intake manifold side 0.05 mm (0.0020 in.)
Exhaust manifold side 0.10 mm (0.0039 in.)

If warpage is greater than maximum, replace the cylinder head.

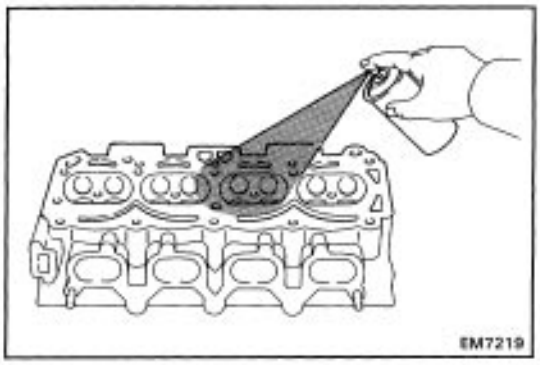

7. INSPECT CYLINDER HEAD FOR CRACKS

Using a dye penetrant, check the combustion chamber, intake and exhaust ports, head surface and the top of the head for cracks.

If cracked, replace the cylinder head.

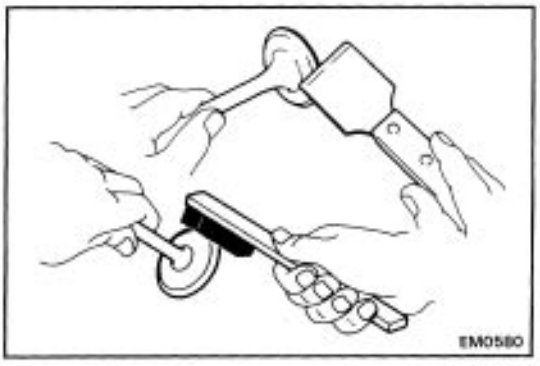

8. CLEAN VALVES

(a) Using a gasket scraper, chip any carbon from the valve head.

(b) Using a wire brush, thoroughly clean the valve.

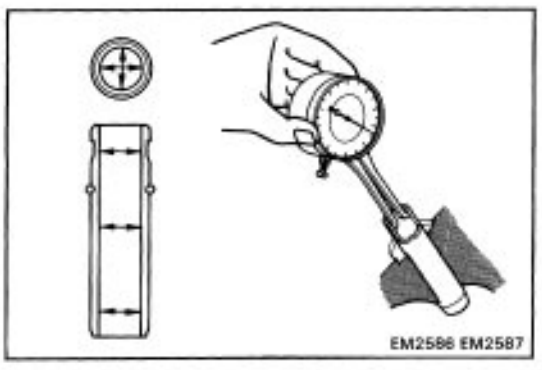

9. INSPECT VALVE STEMS AND GUIDE BUSHINGS

(a) Using a caliper gauge, measure the inside diameter of the guide bushing.

Bushing inside diameter:

6.01 – 6.03 mm (0.2366 – 0.2374 in.)

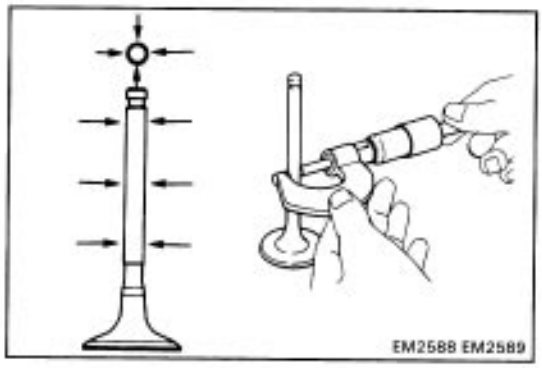

(b) Using a micrometer, measure the diameter of the valve stem.

Valve stem diameter:

Intake 5.970 – 5.985 mm (0.2350 – 0.2356 in.)

Exhaust 5.965 – 5.980 mm (0.2348 – 0.2354 in.)

(c) Subtract the valve stem diameter measurement from the guide bushing inside diameter measurement.

Standard oil clearance:

Intake 0.025 – 0.060 mm (0.0010 – 0.0024 in.)

Exhaust 0.030 – 0.065 mm (0.0030 – 0.0026 in.)

Maximum oil clearance:

Intake 0.08 mm (0.0031 in.)

Exhaust 0.10 mm (0.0039 in.)

If the clearance is greater than maximum, replace the valve and guide bushing.

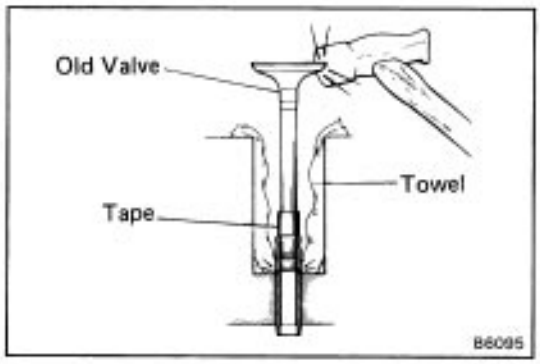

10. IF NECESSARY, REPLACE VALVE GUIDE BUSHINGS

(a) Insert an old valve wrapped with tape into the valve guide bushing, and break off the valve guide bushing by hitting it with a hammer.

NOTICE: Be careful not to damage the lifter hole.

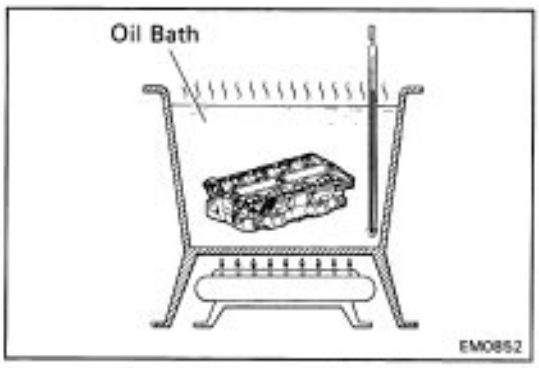

(b) Gradually heat the cylinder head to 80 – 100˚C (176 – 212˚F).

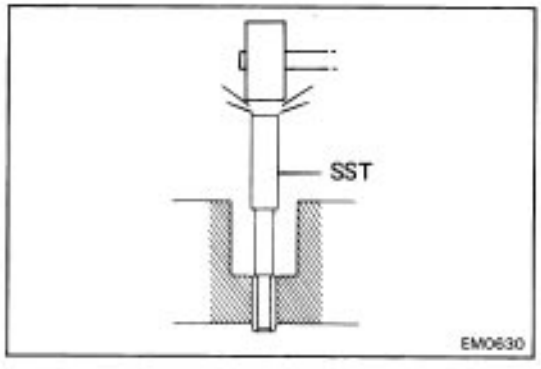

(c) Using SST and a hammer, tap out the guide bushing.

SST 09201–70010

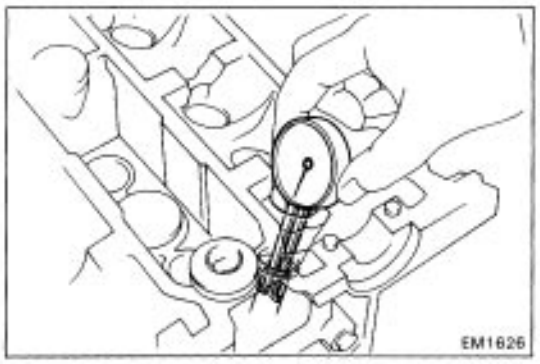

(d) Using a caliper gauge, measure the bushing bore diameter of the cylinder head.

Standard valve guide bore (cold):

11.000 – 11.027 mm (0.4331 – 0.4341 in.)

Both intake and exhaust

Bushing bore mm (in.)	Bushing size
11.000 – 11.027 (0.4331 – 0.4341)	Used STD
11.050 – 11.077 (0.4350 – 0.4361)	Used O/S 0.05

(e) Select a new guide bushing (STD size or O/S 0.05). If the bushing bore diameter of the cylinder head is greater than 11.027 mm (0.4341 in.), machine the bushing bore to the following dimension:

Rebored cylinder head bushing bore dimension:

11.050 – 11.077 mm (0.4350 – 0.436 1 in.)

If the bushing bore diameter of the cylinder head is greater than 11.077 mm (0.4361 in.), replace the cylinder head.

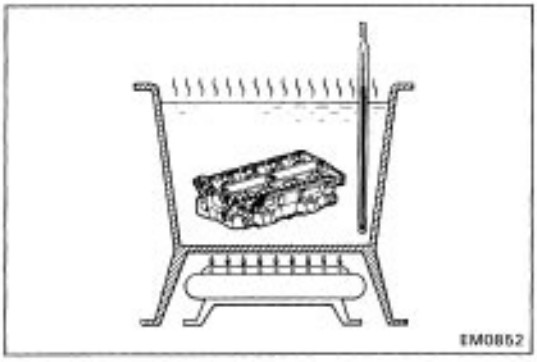

(f) Gradually heat the cylinder head to 80 – 100˚C (176 – 212˚F).

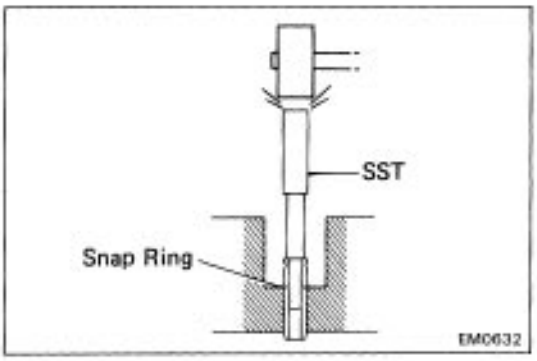

(g) Using SST and a hammer, tap in a new guide bushing until the snap ring makes contact with the cylinder head.

SST 09201–70010

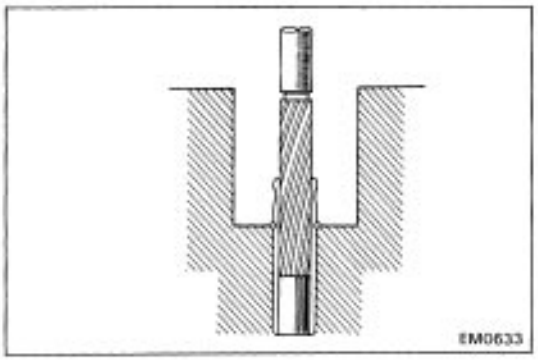

(h) Using a sharp 6 mm reamer, ream the guide bushing to obtain the standard specified clearance (See page EM–100) between the guide bushing and valve stem.

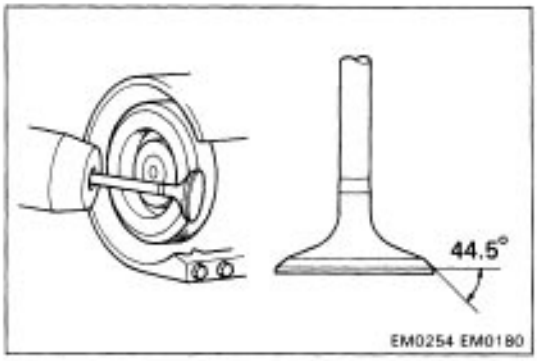

11. INSPECT AND GRIND VALVES

(a) Grind the valve enough to remove pits and carbon.

(b) Check that the valve is ground to the correct valve face angle.

Valve face angle: 44.5°

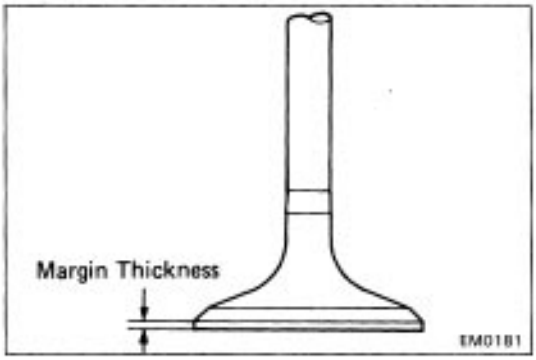

(c) Check the valve head margin thickness.

Standard margin thickness: 0.8 – 1.2 mm (0.031 – 0.047 in.)

Minimum margin thickness: 0.5 mm (0.020 in.)

If the margin thickness is less than minimum, replace the valve.

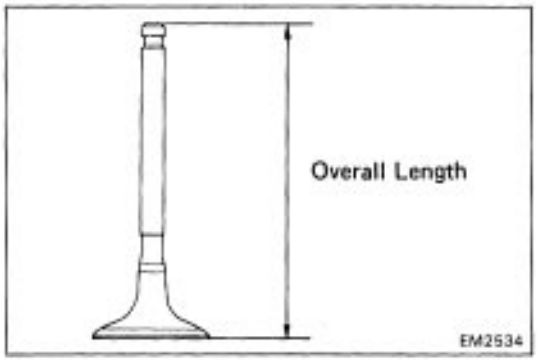

(d) Check the valve overall length.

Standard overall length:

Intake 99.60 mm (3.9213 in.)

Exhaust 99.75 mm (3.9272 in.)

Minimum overall length:

Intake 99.10 mm (3.9016 in.)

Exhaust 99.25 mm (3.9075 in.)

If the overall length is less than minimum, replace the valve.

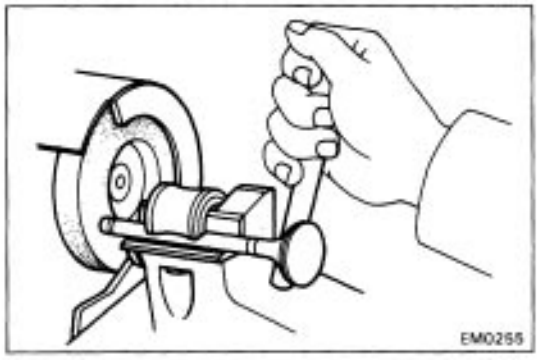

(e) Check the surface of the valve stem tip for wear.

If the valve stem tip is worn, resurface the tip with a grinder or replace the valve.

NOTICE: Do not grind off more than the minimum overall length.

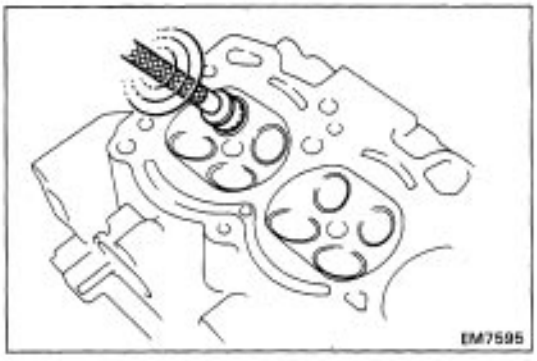

12. INSPECT AND CLEAN VALVE SEATS

(a) Using a 450 carbide cutter, resurface the valve seats. Remove only enough metal to clean the seats.



(b) Check the valve seating position.

Apply a thin coat of prussian blue (or white lead) to the valve face. Install the valve. Lightly press the valve against the seat. Do not rotate the valve.

(c) Check the valve face and seat for the following:

- If blue appears 360° around the face, the valve is concentric. If not, replace the valve.
- If blue appears 360° around the valve seat, the guide and seat are concentric. If not, resurface the seat.
- Check that the seat contact is on the middle of the valve face with the following width.

1.0 – 1.4 mm (0.039 – 0.055 in.)

If not, correct the valve seats as follows:

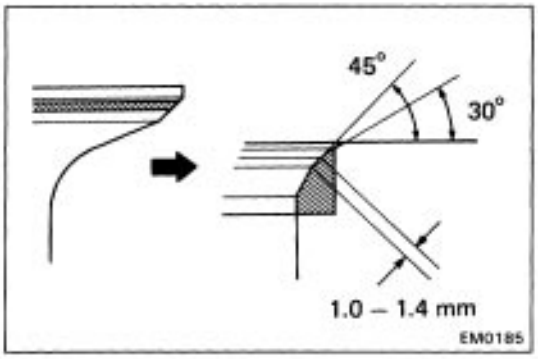

(1) If the seating is too high on the valve face, use 30° and 45° cutters to correct the seat.

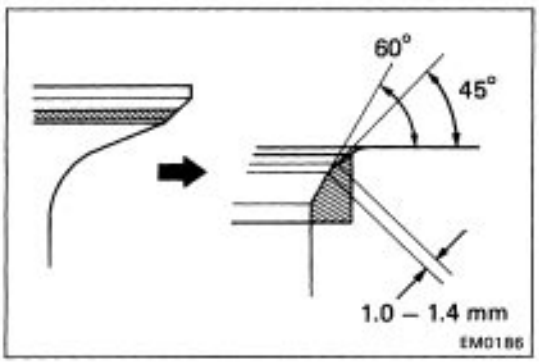

(2) If the seating is too low on the valve face, use 60° and 45° cutters to correct the seat.

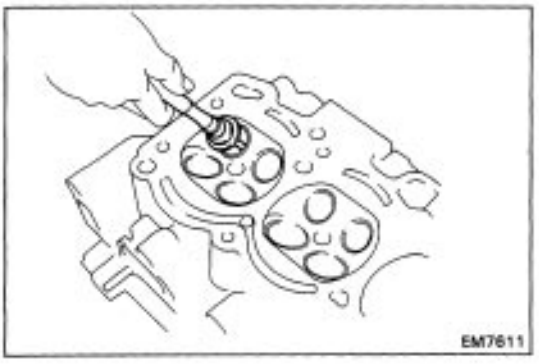

(d) Hand–lap the valve and valve seat with an abrasive compound.

(e) After hand–lapping, clean the valve and valve seat.

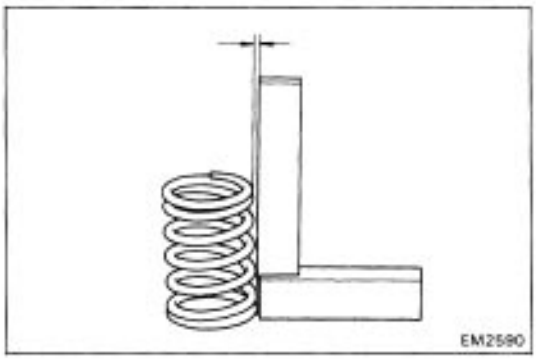

13. INSPECT VALVE SPRINGS

(a) Using a steel square, measure the squareness of the valve spring.

Maximum squareness: 1.8 mm (0.071 in.)

If squareness is greater than maximum, replace the valve spring.

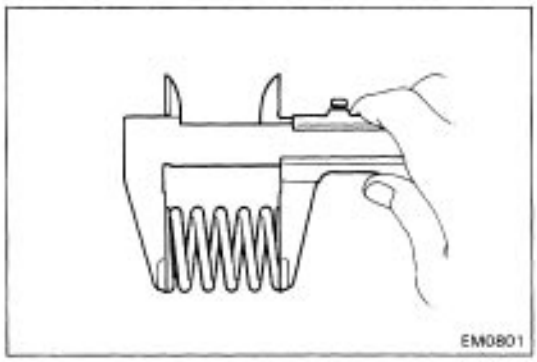

(b) Using calipers, measure the free length of the valve spring.

Free length: 41.09 mm (1.6177 in.)

If the free length is not as specified, replace the valve spring.

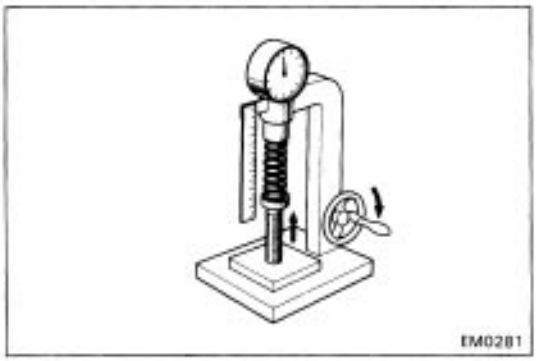

(c) Using a spring tester, measure the tension of the valve spring at the specified installed length.

Standard installed tension:

15.8 kg (34.8 lb, 155 N) at 34.7 mm (1.366 in.)

Minimum installed tension:

14.6 kg (32.2 lb, 143 N) at 34.7 mm (1.366 in.)

If the tension is less than minimum, replace the valve spring.

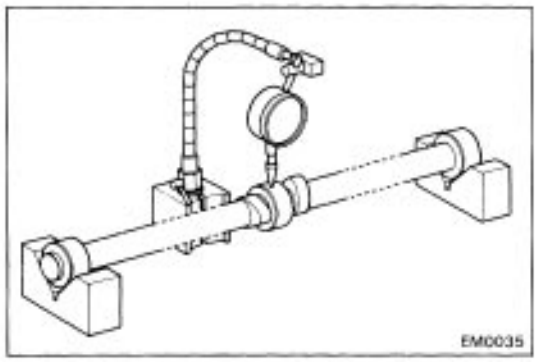

14. INSPECT CAMSHAFTS AND BEARING CAPS

(a) Place the camshaft on V–blocks and, using a dial indicator, measure the circle runout at the center journal.

Maximum circle runout: 0.04 mm (0.0016 in.)

If the circle runout is greater than the maximum, replace the camshaft.

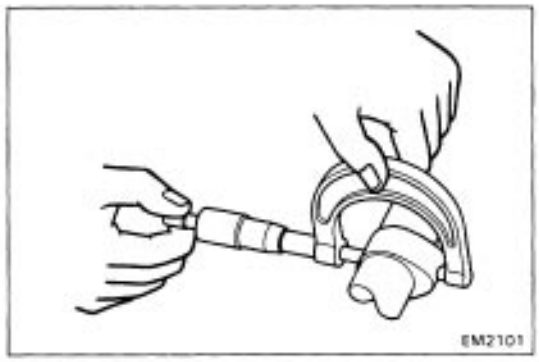

(b) Using a micrometer, measure the cam lobe height.

Standard cam lobe height: 35.410 – 35.510 mm (1.3823 – 1.3980 in.)

Minimum cam lobe height: 35.21 mm (1.3862 in.)

If the cam lobe height is less than minimum, replace the camshaft.

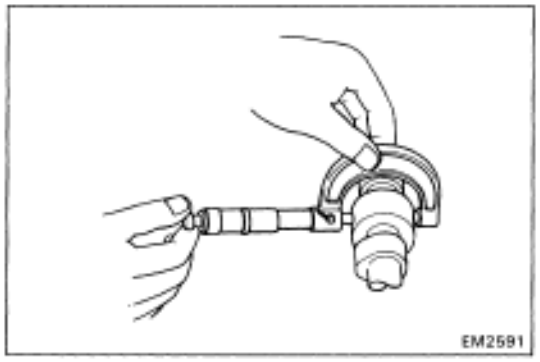

(c) Using a micrometer, measure the journal diameter.
Standard diameter: 26.949 – 26.965 mm (1.0610 – 1.0616 in.)
If the journal diameter is less than specified, replace the camshaft.

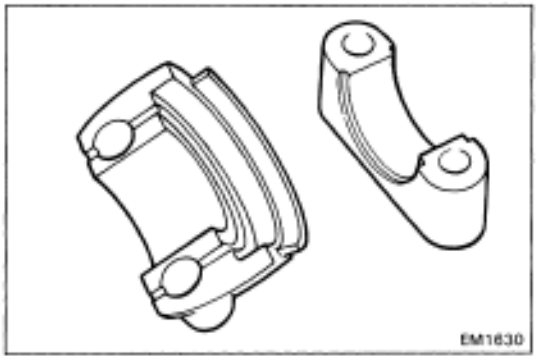

(d) Check the bearings for flaking or scoring.
If bearings are damaged, replace the bearing caps and cylinder head as a set.

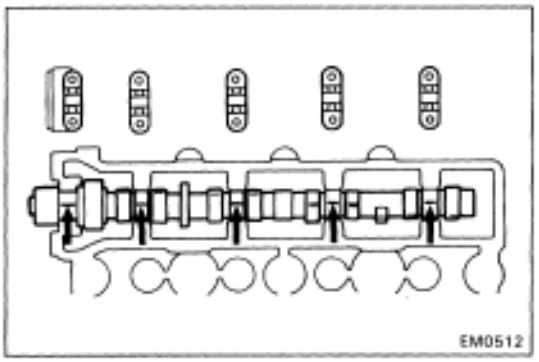

15. INSPECT CAMSHAFT OIL CLEARANCE
(a) Clean the bearing caps and camshaft journal.
(b) Place the camshaft on the cylinder head.
(c) Lay a strip of Plastigage across each journal.

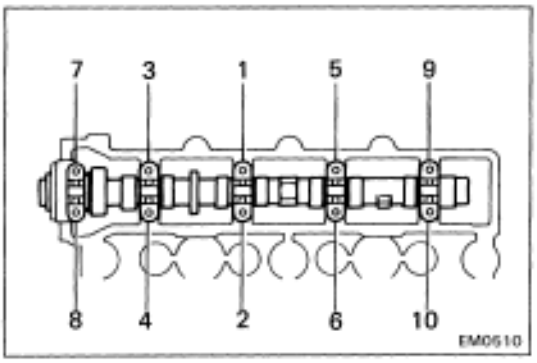

(d) Place the bearing caps on each journal with the arrows pointing toward the front.
(e) Install and torque the cap bolts gradually from the inside in three passes.
Torque: 130 kg–cm (9 ft–lb, 13 N–m)
HINT: Do not turn the camshaft while the Plastigauge is in place.

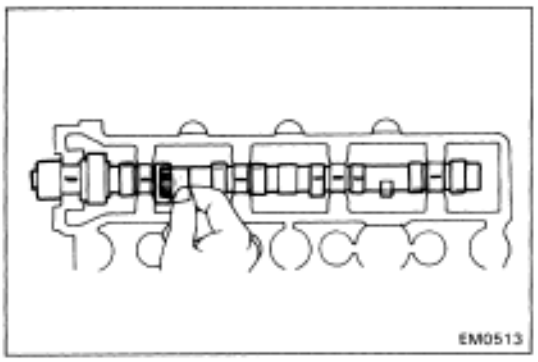

(f) Remove the caps and measure the Plastigauge at its widest point.
Standard oil clearance: 0.035 – 0.072 mm (0.0014 – 0.0028 in.)
Maximum oil clearance: 0.10 mm (0.0039 in.)
If clearance is greater than maximum, replace the cylinder head and/or camshaft.
(g) Clean out the pieces of Plastigauge from the bearing caps and journals.

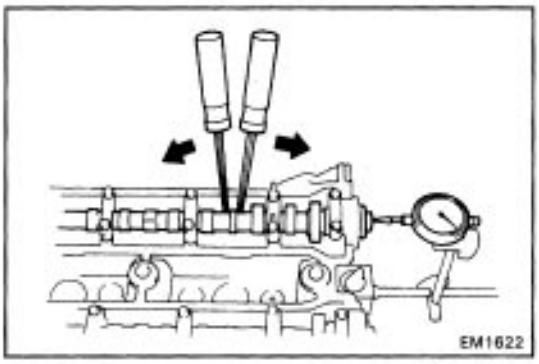

16. INSPECT CAMSHAFT THRUST CLEARANCE

(a) Install the camshafts.
(See step 5 on pages EM–109 and 110)

(b) Using a dial indicator, measure the thrust clearance while moving the camshaft back and forth.

Standard thrust clearance: 0.080 – 0.190 mm (0.0031 – 0.0075 in.)

Maximum thrust clearance: 0.25 mm (0.0098 in.)

If the thrust clearance is greater than maximum, replace the camshaft. If necessary, replace the bearing caps and cylinder head as a set.

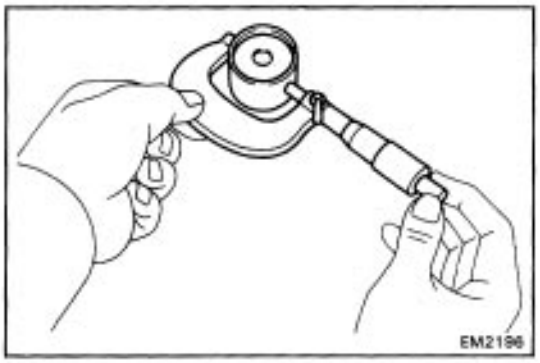

17. INSPECT VALVE LIFTERS AND LIFTER BORES

(a) Using a micrometer, measure the lifter diameter.

Lifter diameter: 27.975 – 27.985 mm (1.1014 – 1.1018 in.)

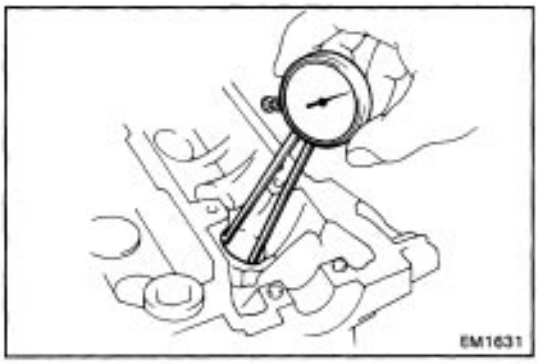

(b) Using a caliper gauge, measure the lifter bore diameter of the cylinder head.

Lifter bore diameter: 28.000 – 28.021 mm (1.1024 – 1.1032 in.)

(c) Subtract the lifter diameter measurement from the lifter bore diameter measurement.

Standard oil clearance: 0.015 – 0.046 mm (0.0006 – 0.0018 in.)

Maximum oil clearance: 0.10 mm (0.0039 in.)

If the oil clearance is greater than maximum, replace the lifter. If necessary, replace the cylinder head.

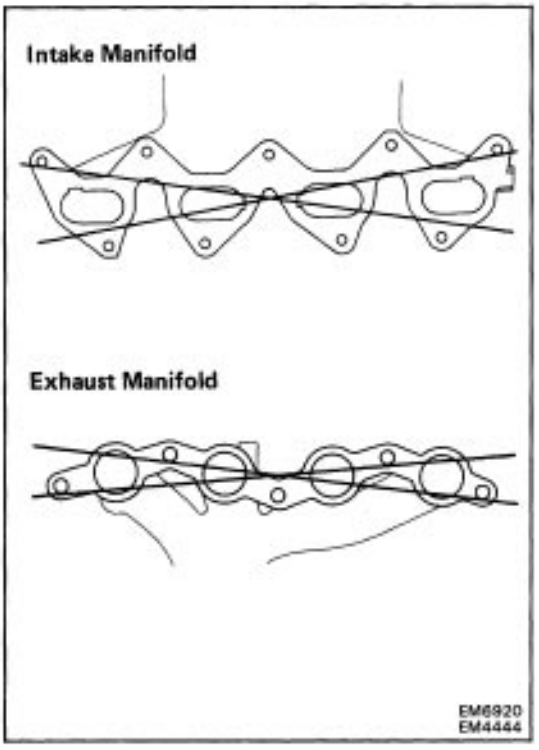

18. INSPECT INTAKE AND EXHAUST MANIFOLDS

Using a precision straight edge and feeler gauge, measure the surface contacting the cylinder head for warpage.

Maximum warpage:

Intake manifold 0.05 mm (0.0020 in.)

Exhaust manifold 0.30 mm (0.0118 in.)

If warpage is greater than maximum, replace the manifold.

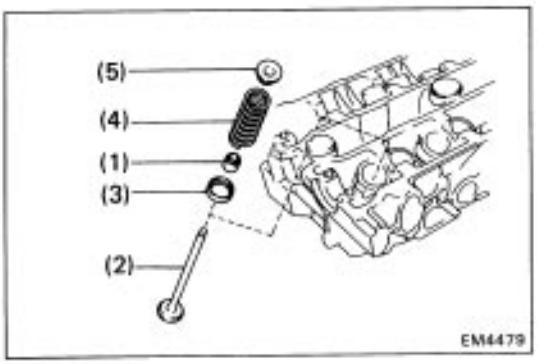

ASSEMBLY OF CYLINDER HEAD

(See page EM–89)

HINT:

- Thoroughly clean all parts to be assembled.
- Before installing the parts, apply new engine oil to all sliding and rotating surfaces.
- Replace all gaskets and oil seals with new ones.

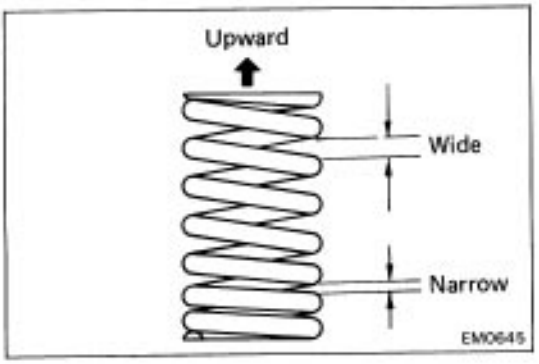

1. INSTALL VALVES

(a) Install the following parts:
(1) New oil seal
(2) Valve
(3) Spring seat
(4) Valve spring
(5) Spring retainer

NOTICE: Confirm the correct direction of the valve spring.

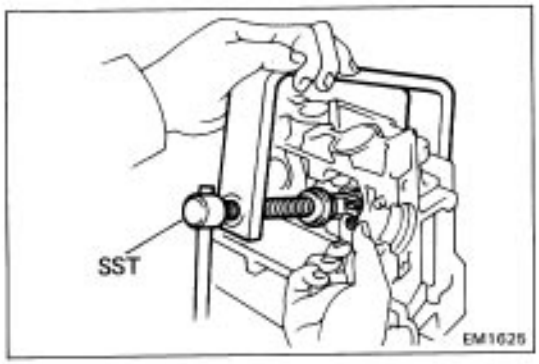

(b) Using SST, compress the valve spring and place the two keepers around the valve stem.
SST 09202–70010

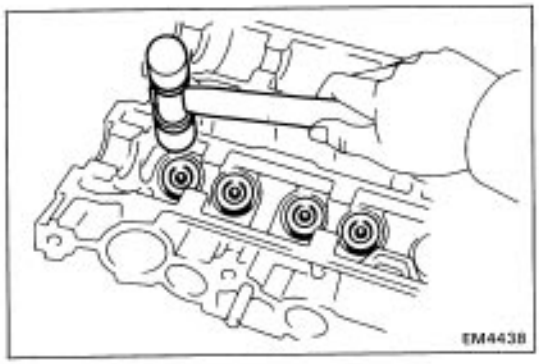

(c) Using a plastic–faced hammer, lightly tap the valve stem tip to assure proper fit.

2. INSTALL VALVE LIFTERS AND SHIMS

(a) Install the valve lifter and shim.
(b) Check the valve lifter rotates smoothly by hand.
HINT: Make sure the valve lifters with their shims are installed in the correct order.

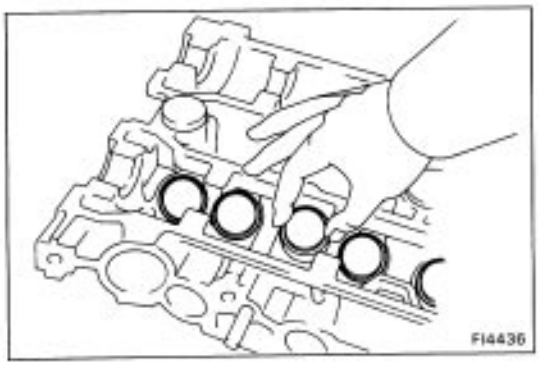

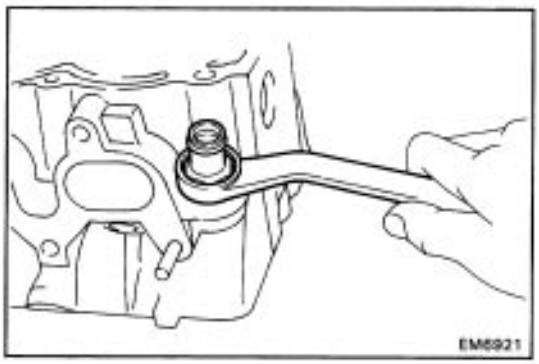

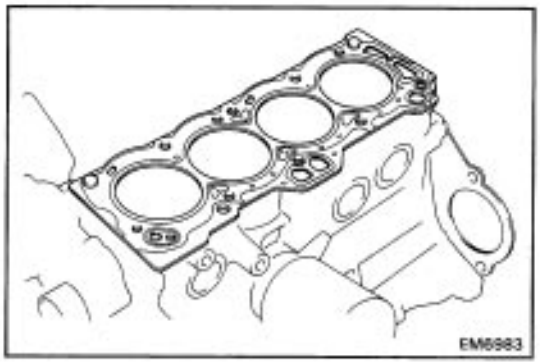

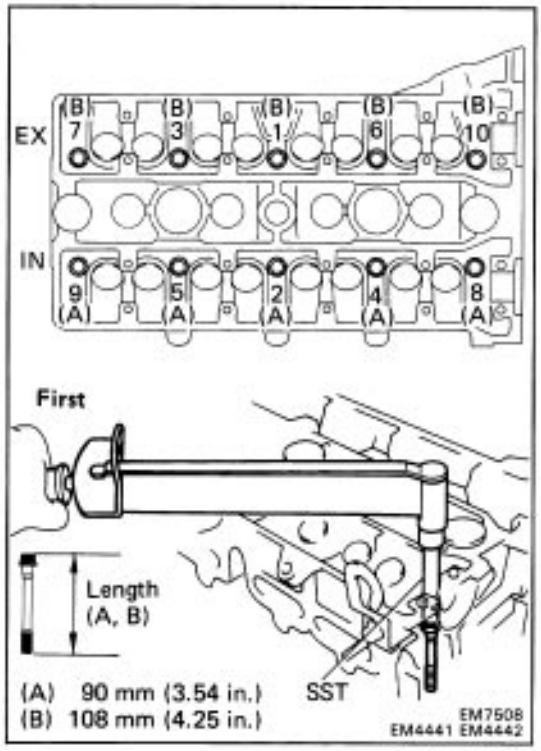

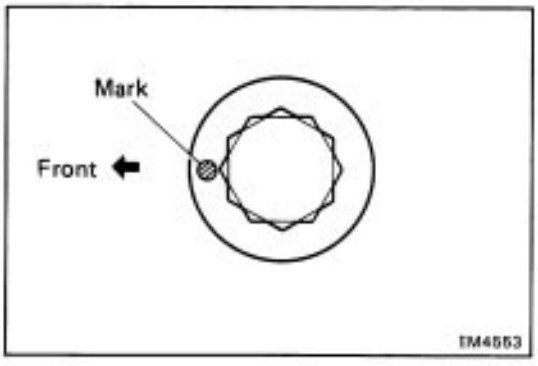

INSTALLATION OF CYLINDER HEAD

(See page EM–89)

1. INSTALL UNION

(a) Apply adhesive to two or three threads.

Adhesive: Part No.08833–00080, THREE BOND 1344, LOCTITE 242 or equivalent

(b) Install and torque the union.

Torque: 300 kg–cm (22 ft–lb, 29 N–m)

2. INSTALL ENGINE HANGERS

Install the engine hanger and ground strap connector with the bolt. Install the two engine hangers.

Torque: 250 kg–cm (18 ft–lb, 25 N–m)

3. INSTALL CYLINDER HEAD

HINT:

- The cylinder head bolts are tighten in three progressive steps.
- If any of the bolts break or deform, replace them.

(a) Place the cylinder head with a new cylinder head gasket on the cylinder block.

NOTICE: Be careful of the installation direction.

(b) Place the cylinder head in position on the cylinder head gasket.

HINT: Apply a light coating of engine oil on the bolt threads and under the bolt head before installing.

(c) First, using SST, install and uniformly tighten the ten cylinder head bolts in several passes, in the sequence shown.

SST 09205–16010

Torque: 300 kg–cm (22 ft–lb, 29 N–m)

HINT: Each bolt length is indicated in the illustration.

If any one of the bolts does not meet the torque specification, replace the bolt.

(d) Mark the front of the cylinder head bolt head with paint.

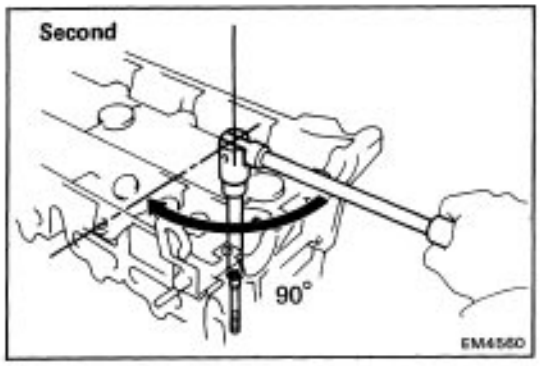

(e) Second, retighten the ten cylinder head bolts 90° in the numerical order shown.

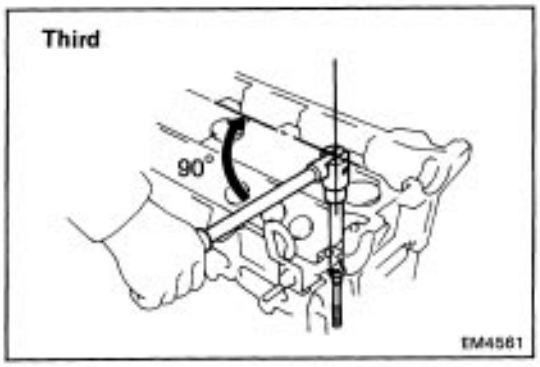

(f) Third, retighten the ten cylinder head bolts by an additional 90°.

(g) Check that the paint mark is now facing rearward.

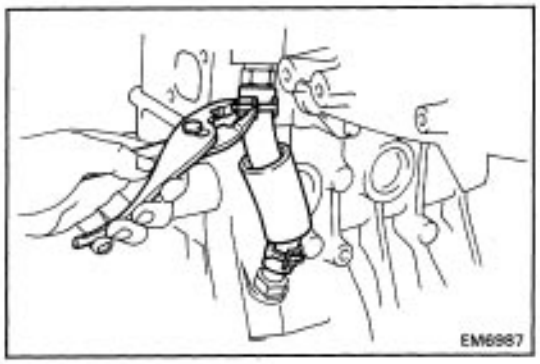

4. INSTALL NO.2 PCV HOSE

Connect the PCV hose to the cylinder head. Install the two clamps.

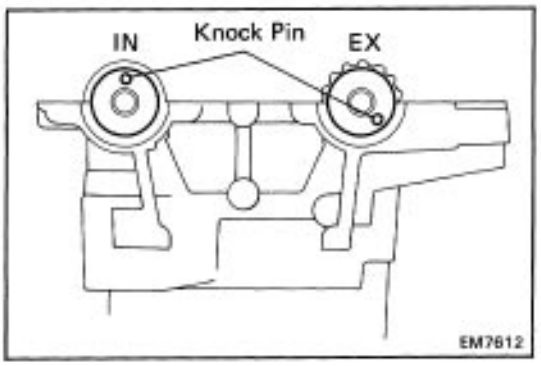

5. INSTALL CAMSHAFTS AND BEARING CAPS

(a) Place the camshafts on the cylinder head as shown in the illustration.

HINT: The exhaust camshaft has a distributor drive gear.

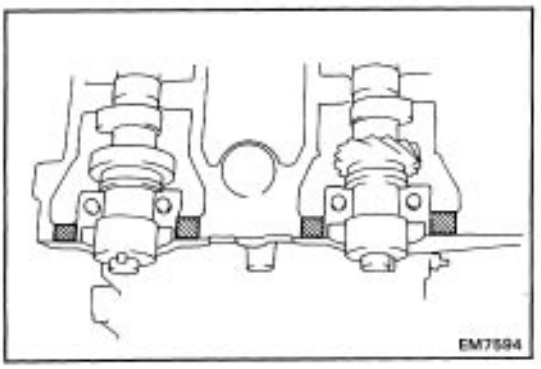

(b) Apply seal packing to the head as shown in the illustration.

Seal packing: Part No. 08826–00080 or equivalent

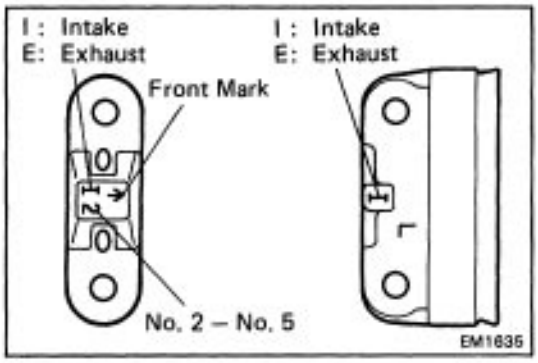

(c) Install the bearing caps in their proper locations.
HINT: Each bearing cap has a number and front mark.

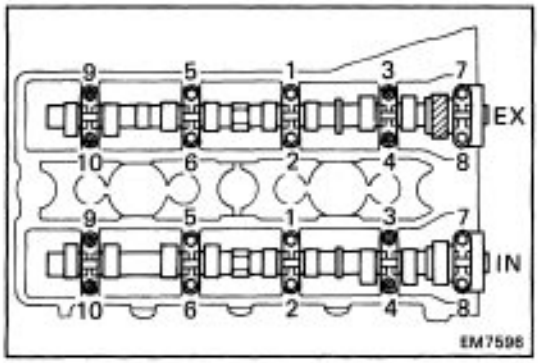

(d) Apply a light coat of engine oil on the threads and under the heads of the bearing cap bolts.
(e) Install and uniformly tighten the bearing cap bolts in several passes, in the sequence shown.
Torque: 130 kg–cm (9 ft–lb, 13 N–m)

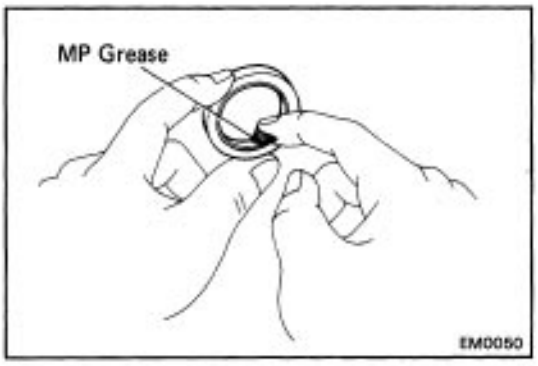

(f) Apply MP grease to the new camshaft oil seal lip.

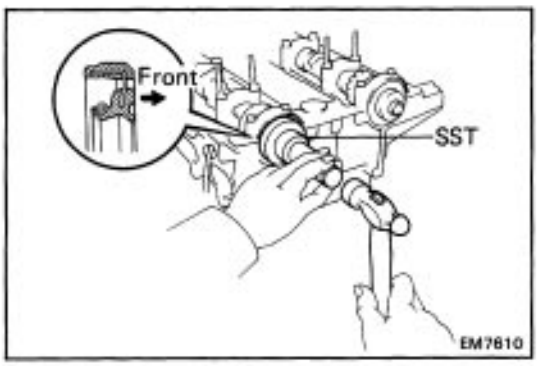

(g) Using SST, tap in new camshaft oil seals.
SST 09223–50010
HINT:
- Do not install the oil seal with the lip facing the wrong direction.
- Insert the oil seal into the deepest part of the cylinder head.

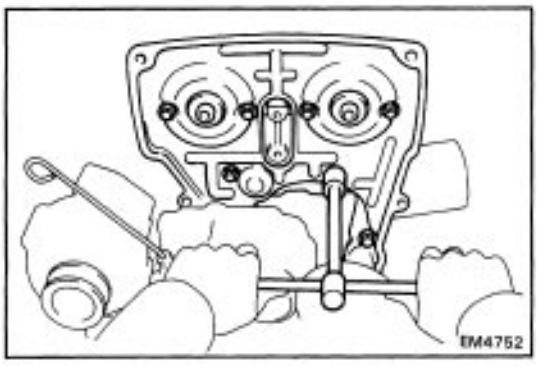

6. INSTALL NO.4 TIMING BELT COVER
Install the belt cover with the seven bolts.
Torque: 95 kg–cm (82 in–lb, 9.3 N–m)

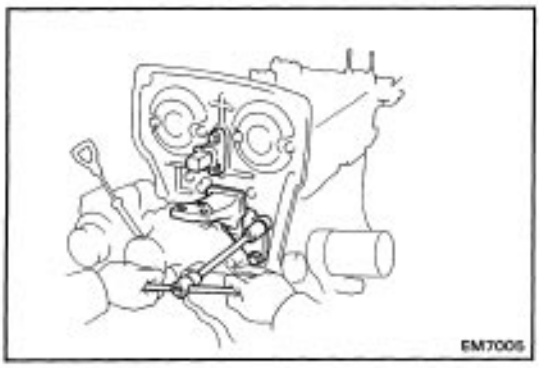

7. INSTALL RH MOUNTING BRACKETS

(a) Install the bracket with the three bolts.

Torque: 400 kg–cm (29 ft–lb, 39 N–m)

(b) Install the No.2 bracket with the two bolts.

Torque: 210 kg–cm (15 ft–lb, 21 N–m)

8. INSTALL CAMSHAFT TIMING PULLEYS

(See step 1 on page EM–48)

Torque: 600 kg–cm (43 ft–lb, 59 N–m)

9. INSTALL TIMING BELT

Align the matchmarks of the camshaft timing pulleys and timing belt, and install the timing belt.

NOTICE: Be careful not to shift the meshing of the crankshaft timing pulley and timing belt.

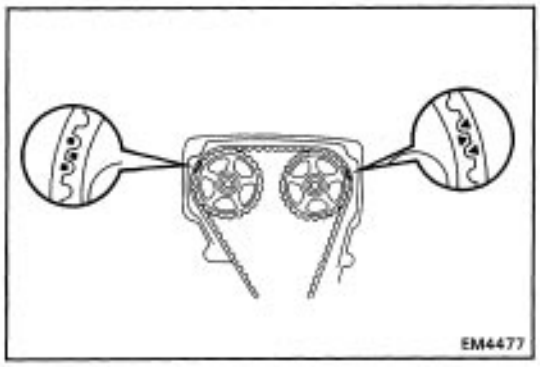

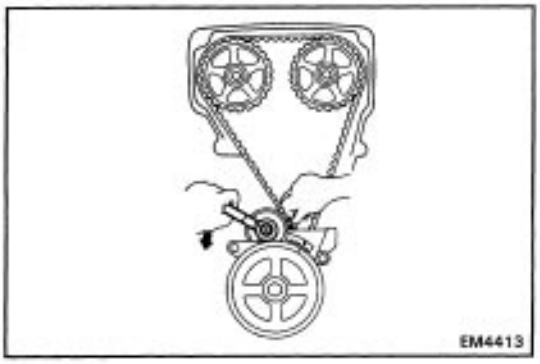

10. CHECK VALVE TIMING AND TIMING BELT DEFLECTION

(a) Slowly loosen the idler pulley bolt.

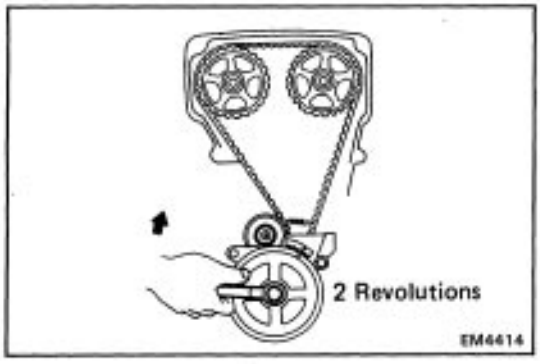

(b) Turn the crankshaft pulley two revolutions from TDC to TDC .

HINT: Always turn the crankshaft clockwise.

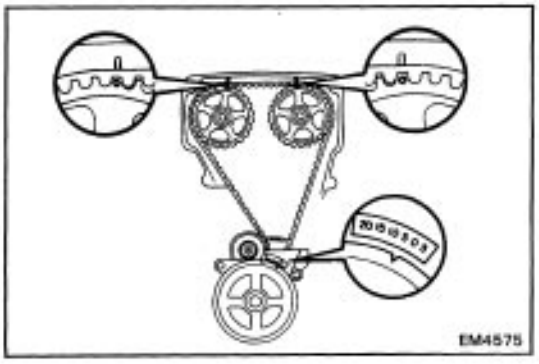

(c) Check that each pulley aligns with the timing marks as shown in the illustration.

If the marks do not align, shift the meshing of the timing belt and timing pulley and readjust according to steps 9, 10.

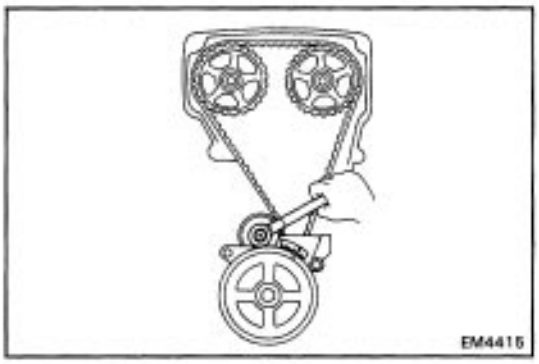

(d) Torque the idler pulley bolt.
Torque: 375 kg–cm (27 ft–lb, 37 N–m)

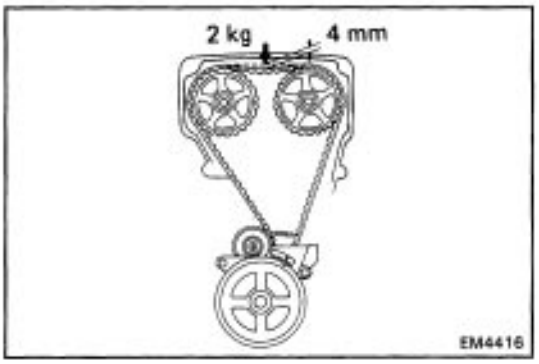

(e) Check that there is belt deflection at the position indicated in the illustration.
Deflection: 4 mm (0.16 in.)
at 2 kg (4.4 lb, 20 N)

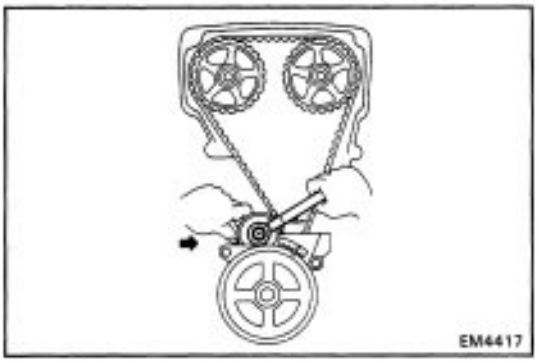

If the deflection is not as specified, adjust with the idler pulley.

11. INSTALL SPARK PLUGS (See page IG–12)
Torque: 180 kg–cm (13 ft–lb, 18 N–m)

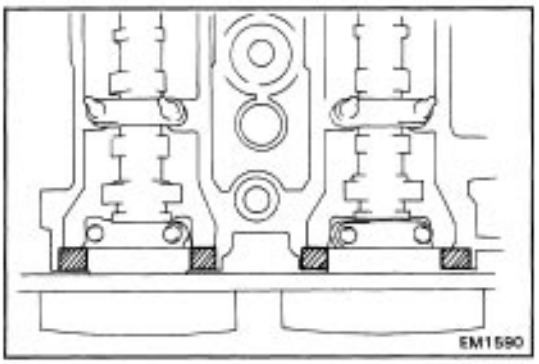

12. INSTALL CYLINDER HEAD COVERS
(a) Apply seal packing to the cylinder head as shown in the illustration.
Seal packing: Part No. 08826–00080 or equivalent

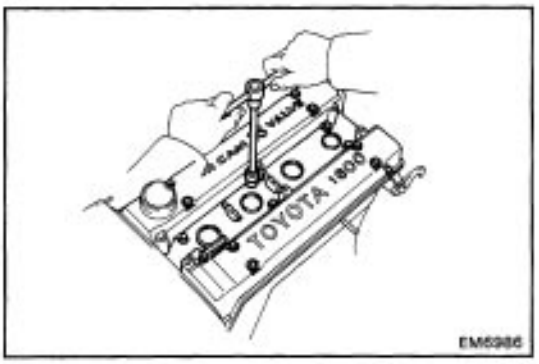

(b) Install the gaskets to the head covers.
(c) Install the two head covers with the four seal washers and cap nuts.
Torque: 80 kg–cm (5.8 ft–lb, 7.8 N–m)
(d) Install the gasket to the center cover.
(e) Install the center cover with the four bolts.

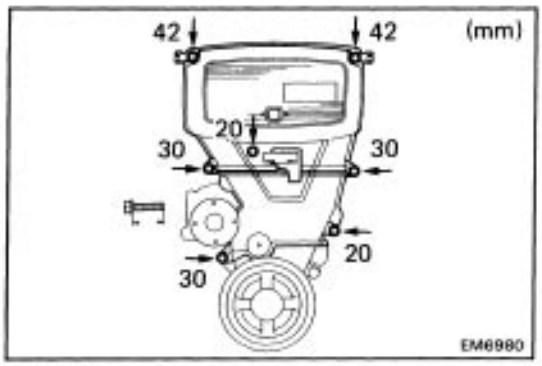

13. INSTALL NO.2 AND NO.3 TIMING BELT COVERS

(a) Install the gaskets to the belt covers.

(b) Install the No.2, No.3 belt covers and cord support plate with the seven bolts.

HINT: Each bolt length is indicated in the illustration.

(c) (A/C)

Install the A/C idle pulley.

14. TEMPORARILY INSTALL WATER PUMP PULLEY

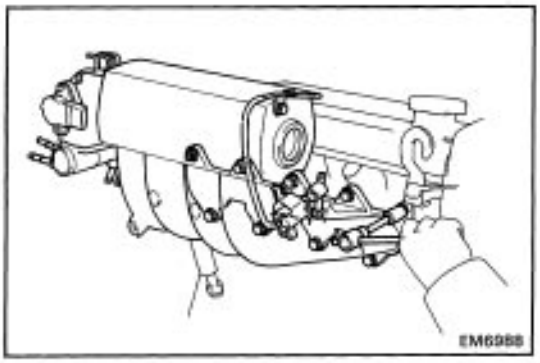

15. INSTALL INTAKE MANIFOLD

(a) Install a new gasket and the intake manifold with the seven bolts and two nuts.

Torque: 280 kg–cm (20 ft–lb, 27 N–m)

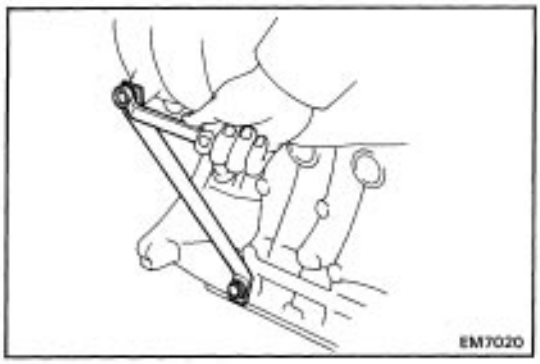

(b) Install the manifold stay with the two bolts.

Torque:

14 mm bolt head 400 kg–cm (29 ft–lb, 39 N–m)

12 mm bolt head 220 kg–cm (16 ft–lb, 22 N – m)

16. INSTALL RH ENGINE MOUNTING INSULATOR

(See step 12 on page EM–51)

17. INSTALL WATER INLET PIPE

(See step 4 on page CO–9)

18. INSTALL WATER OUTLET AND BY–PASS PIPE

(a) Install a new gasket, the water outlet and by–pass pipe assembly with the three bolts.

Torque:

Cylinder head side

280 kg–cm (20 ft–lb, 27 N–m)

Intake manifold side

130 kg–cm (9 ft–lb, 13 N–m)

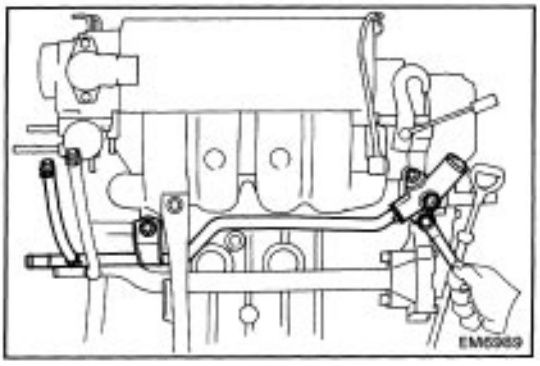

(b) Install the alternator drive belt adjusting bar with the three bolts.

Torque: 185 kg–cm (13 ft–lb, 18 N–m)

19. (w/ PS AND/OR with A/C)

INSTALL PS AND/OR A/C DRIVE BELT

(See step 15 on page EM–52)

20. INSTALL ALTERNATOR DRIVE BELT AND TIGHTEN WATER PUMP PULLEY BOLTS

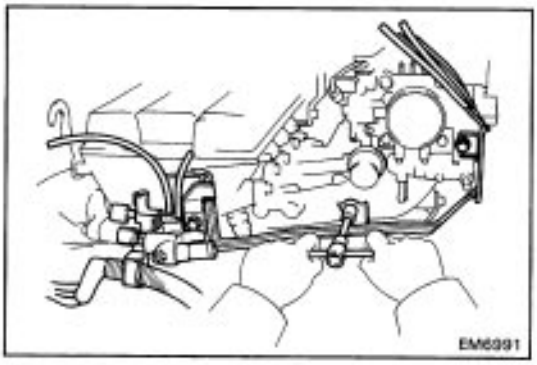

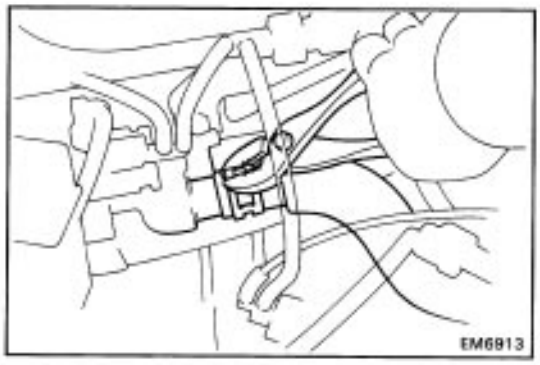

21. INSTALL CYLINDER HEAD REAR COVER AND VACUUM PIPE

(a) Using a new gasket, temporarily install the cylinder head rear cover and wire clamp.
(b) Install the vacuum pipe, and tighten the four bolts.
(c) Connect the vacuum hoses to the vacuum pipe.
(d) Connect the following connectors:
- Start injector time switch connector
- Water temp. sensor connector
- (wI EGR system)
  EGR VSV connector

(e) Connect the heater hose to the cylinder head rear cover.

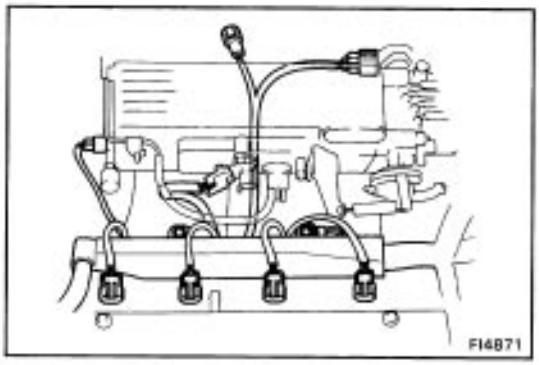

22. CONNECT ENGINE WIRE TO INTAKE MANIFOLD

(a) Connect the engine wire to the intake manifold with the two bolts.
(b) Connect the following connectors:
- Fuel pressure VSV connector
- Cold start injector connector
- Throttle position sensor connector
- Knock sensor connector

23. INSTALL INJECTOR AND DELIVERY PIPE
(See steps 1 to 4 on pages FI–140 and 141)

24. INSTALL COLD START INJECTOR PIPE
(See steps 2 and 3 on page FI–134)

25. INSTALL PCV HOSE

26. INSTALL EXHAUST MANIFOLD

(a) Install the lower heat insulator to the manifold with the three bolts.

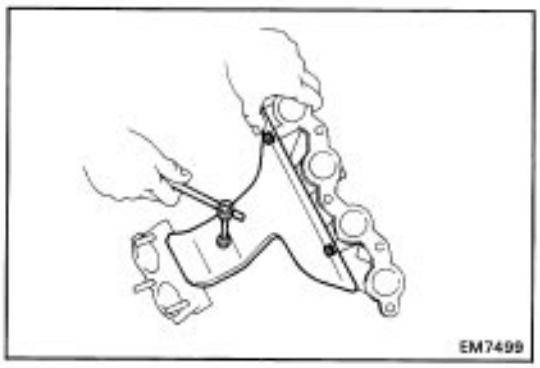

(b) Install a new gasket and the manifold with the three bolts and two nuts.
Torque: 250 kg–cm (18 ft–lb, 25 N–rn)
(c) Install the RH and LH manifold stay with the three bolt and nut.
Torque: 400 kg–cm (29 ft–lb, 39 N–m)

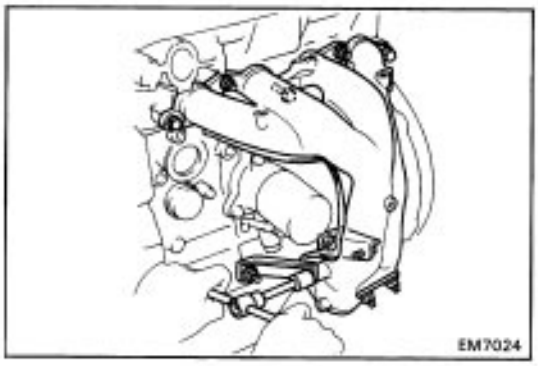

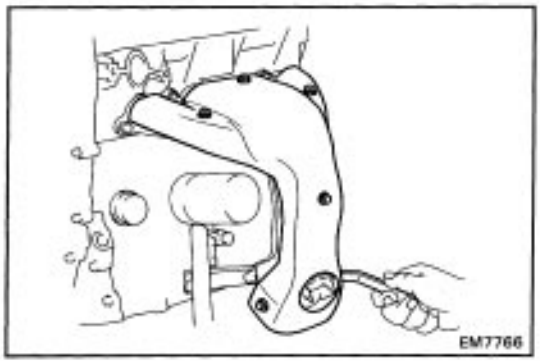

(d) Install the upper heat insulator with the six bolts.

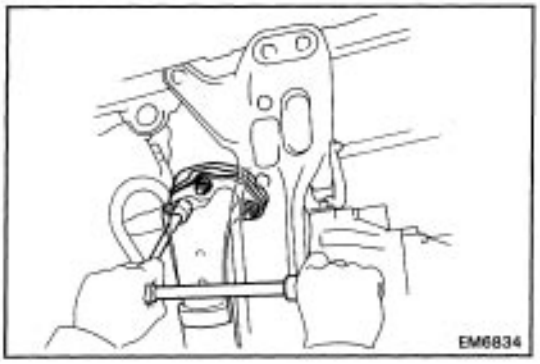

27. CONNECT EXHAUST PIPE TO EXHAUST MANIFOLD

(a) Install two new gaskets to the exhaust pipe.

(b) Connect the exhaust pipe to the manifold.
Install and torque with three new nuts.

Torque: 630 kg–cm (46 ft–lb, 62 N–m)

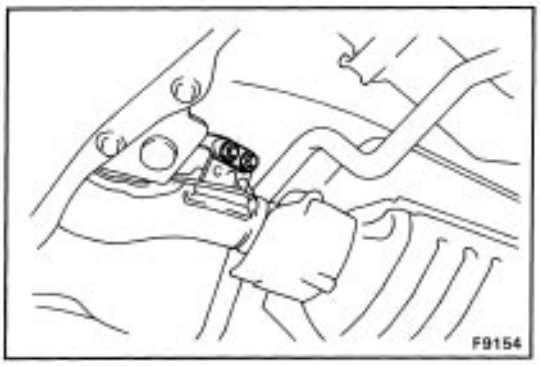

(c) Install the two bolts to the pipe clamp.

Torque: 195 kg–cm (14 ft–lb, 19 N–m)

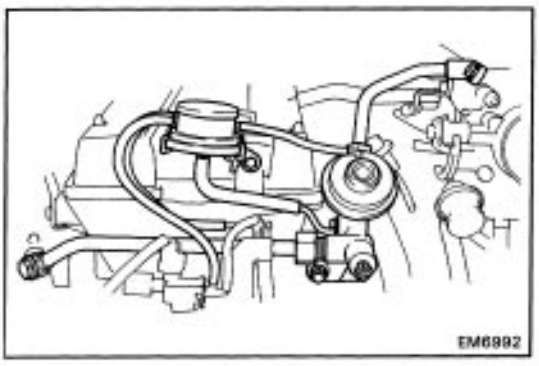

28. INSTALL EGR VALVE AND MODULATOR

(a) Install a new gasket, the EGR valve and pipes assembly with the four bolts.

Torque:

Union bolt	**700 kg–cm (51 ft–lb, 69 N–m)**
Bolt	**190 kg–cm (14 ft–lb, 19 N–m)**

(b) Install the EGR vacuum modulator with the bolt.

(c) Install the vacuum hoses.

(d) (California)
Connect the EGR gas temp. sensor connector.

29. INSTALL DISTRIBUTOR (See page IG–18)

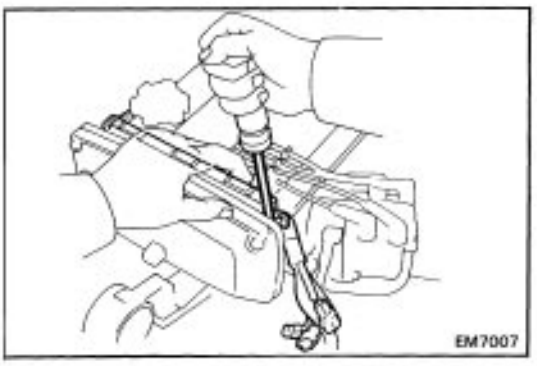

30. CONNECT ENGINE WIRE TO NO.4 TIMING BELT COVER

(a) Connect the engine wire to the timing belt cover.

(b) Connect the following connectors:

- Oil pressure sender gauge connector
- Distributor wire connectors
- (with A/C)
  Compressor connector

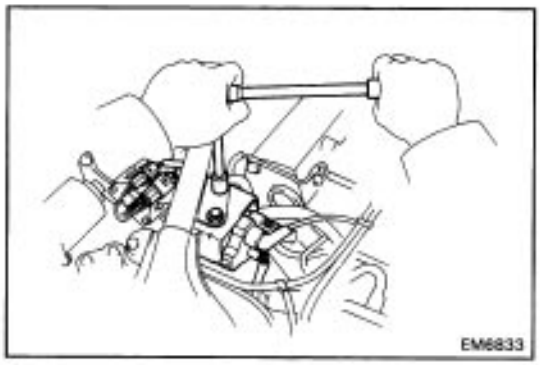

31. INSTALL IGNITION COIL

(a) Install the ignition coil with the bracket and two bolts.

(b) Connect the high–tension wire.

(c) Connect the two ignition connectors.

32. INSTALL REDIATOR INLET HOSE

33. (w/ CRUISE CONTROL)

INSTALL CRUISE CONTROL ACTUATOR

(See step 19 on page EM–53)

34. CONNECT BRAKE VACUUM HOSE

35. INSTALL WASHER TANK

36. CONNECT ACCELERATOR WIRE TO BRACKET

37. CONNECT WATER BY–PASS HOSES

38. (w/ PS)

CONNECT AIR HOSES

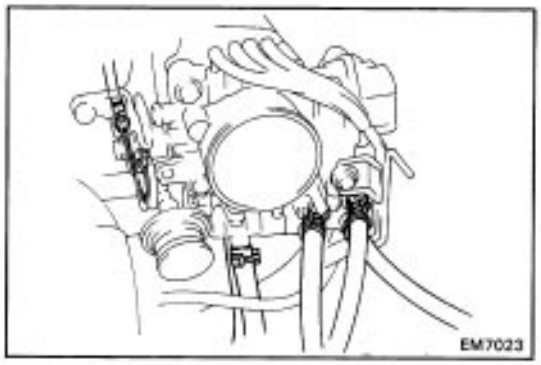

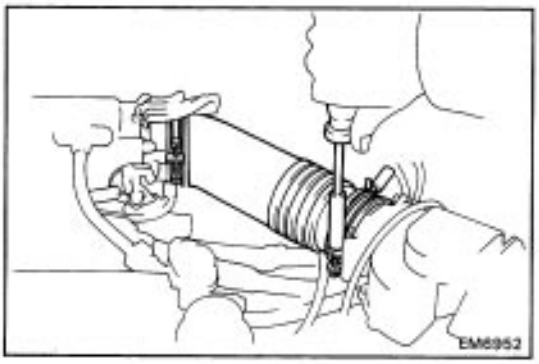

39. INSTALL AIR CLEANER HOSE

(a) Install the air cleaner hose with the two clamp bolts.

(b) (with A/C)

Connect the air hose.

(c) Connect the vacuum hose to the air cleaner hose.

40. REFILL WITH COOLANT (See page CO–5)

Capacity (wI heater)

6.0 liter (6.3 US qts, 5.3 Imp. qts)

41. CONNECT CABLE TO NEGATIVE TERMINAL OF BATTERY

42. START ENGINE AND CHECK FOR LEAKS

Warm up the engine and inspect for leaks.

43. INSTALL RH ENGINE UNDER COVER

44. CHECK IGNITION TIMING (See page IG–19)

Ignition timing:

10 ° BTHEC @ idle

(w/ connected TE 1 and El)

45. RECHECK ENGINE COOLANT LEVEL AND OIL LEVEL

CYLINDER BLOCK

COMPONENTS

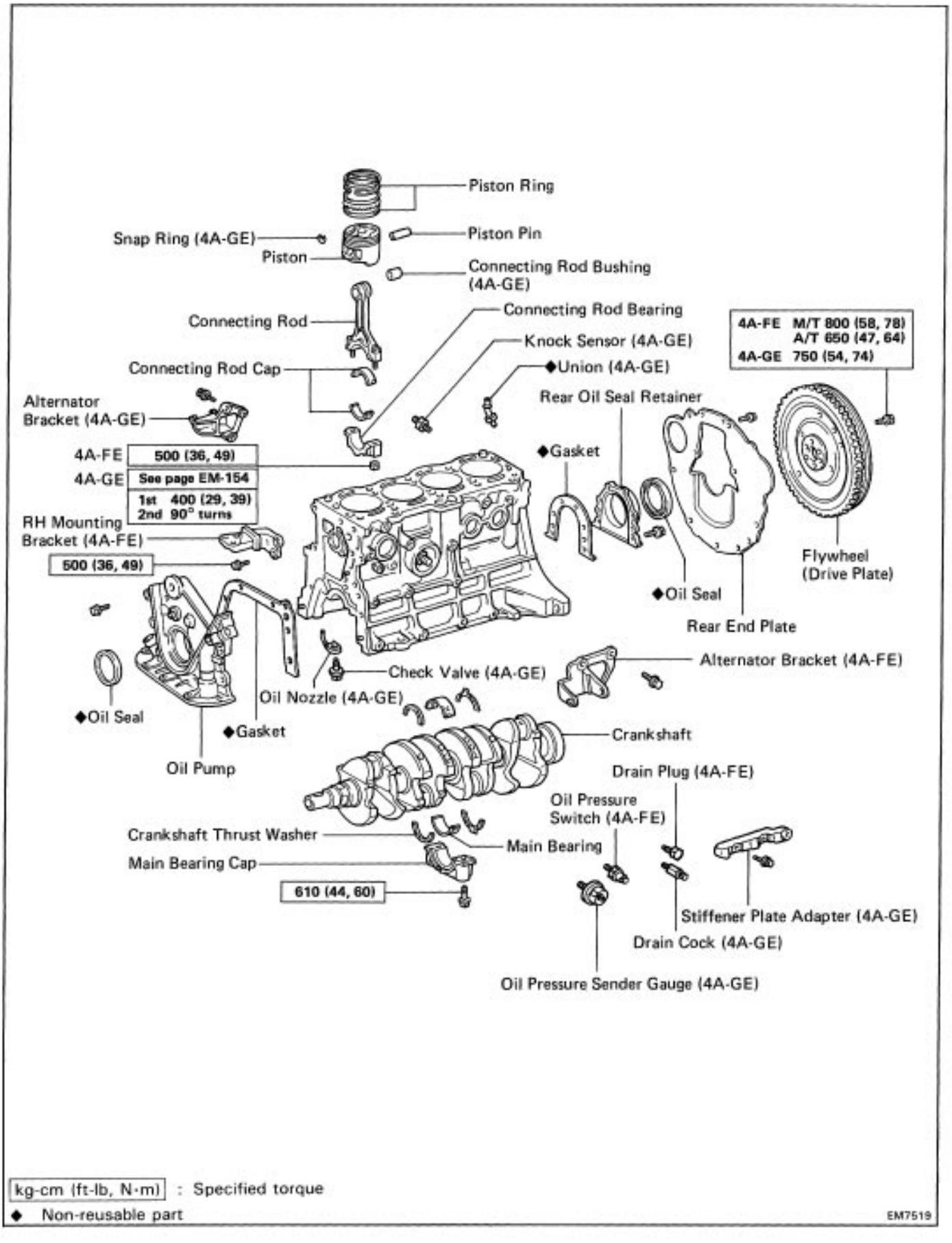

kg-cm (ft-lb, N·m) : Specified torque

◆ Non-reusable part

EM7519

REMOVAL OF ENGINE (4A–FE)

1. REMOVE BATTERY AND HOOD

2. REMOVE RH AND LH ENGINE UNDER COVER

3. DRAIN ENGINE OIL

4. DRAIN ENGINE COOLANT

5. DRAIN GEAR OIL (M/T) OR FLUID (A/T)

6. REMOVE RADIATOR WITH COOLING FAN

(See page CO–13)

7. DISCONNECT ACCELERATOR WIRE FROM BRACKET

8. (A/T)

DISCONNECT THROTTLE CABLE FROM BRACKET

9. (w/ CRUISE CONTROL)

REMOVE CRUISE CONTROL ACTUATOR

10. REMOVE AIR CLEANER ASSEMBLY

(a) Disconnect the vacuum hose from the charcoal canister.

(b) Disconnect the air intake temp. sensor connector from the air cleaner cap.

(c) Disconnect the air hose from the air pipe.

(d) Loosen the air cleaner hose clamp bolt.

(e) Disconnect the air cleaner cap clips.

(f) Remove the air cleaner cap with air cleaner hose.

(g) Remove the air cleaner filter element.

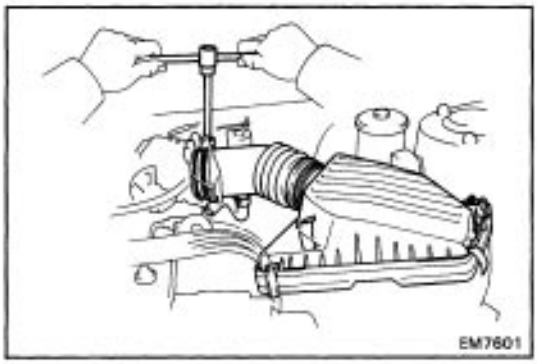

(h) Disconnect the harness clamp from the boss, and remove the three bolts and air cleaner case.

(i) Remove the two bolts and air cleaner support bracket.

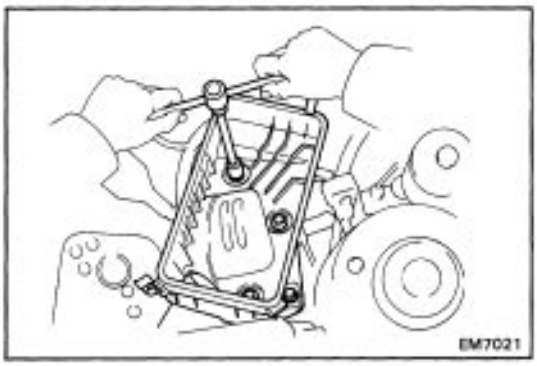

11. REMOVE WASHER TANK

12. DISCONNECT FOLLOWING HOSES:

(a) Disconnect the following vacuum hoses from the intake chamber:

(1) Vacuum sensor hose from gas filter

(2) Brake booster vacuum hose

(3) (with A/C)

Two A/C vacuum hoses from actuator.

(b) (w/ PS and/or with A/C)

Disconnect the air hose from the air pipe.

(c) Disconnect the fuel return hose from the air pipe.

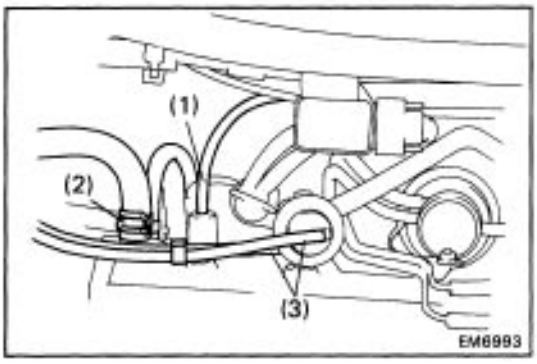

13. DISCONNECT ENGINE WIRE

(a) Remove the three nuts, No–2 junction block and No.5 relay block.

(b) Disconnect the following connectors:

- Ground strap connector and bolt
- Check connector
- Vacuum sensor connector
- (with A/C)
  A/C wire connector

(c) Remove the front and rear console boxes.

(d) Remove the center cover in front of the console box.

(e) Disconnect the four connectors from the cowl wire and ECU .

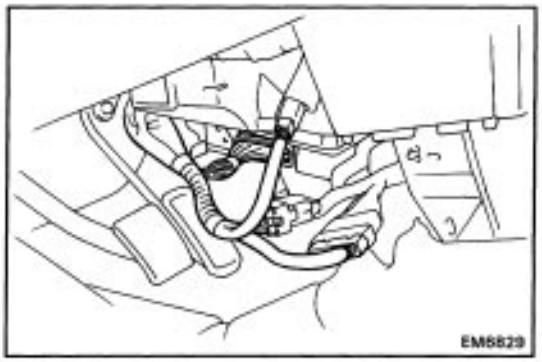



(f) Pull out the engine wire from the cowl panel.

14. DISCONNECT HEATER WATER HOSES

(a) Disconnect the heater hose from the water inlet housing.

(b) Disconnect the hose from the water inlet pipe.

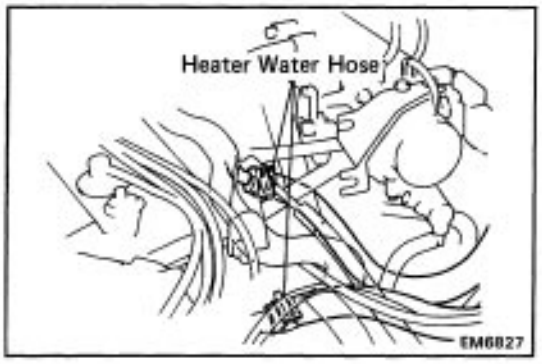

15. DISCONNECT INLET FUEL HOSE FROM FUEL FILTER

16. DISCONNECT FUEL RETURN HOSE FROM AIR PIPE

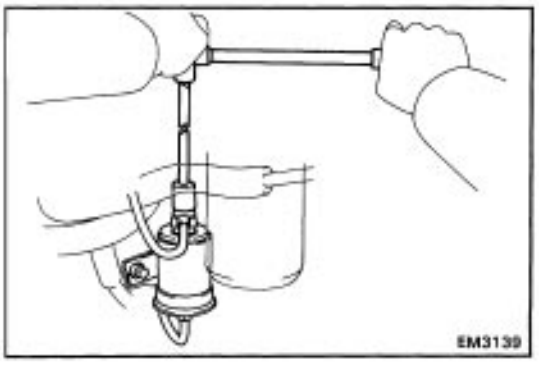

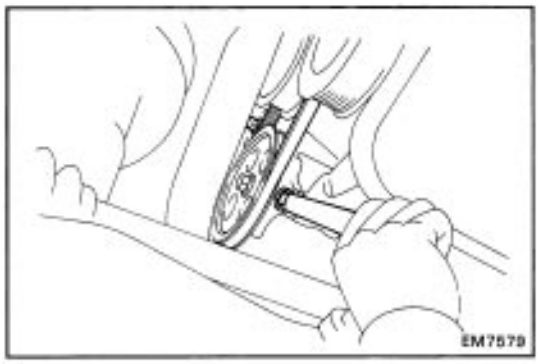

17. (w/ PS)

DISCONNECT PS PUMP

(a) Loosen the adjusting bolt, pivot bolt, and remove the drive belt.

(b) Remove the adjusting bolt, pivot bolt and PS pump.

(c) Suspend the PS pump.

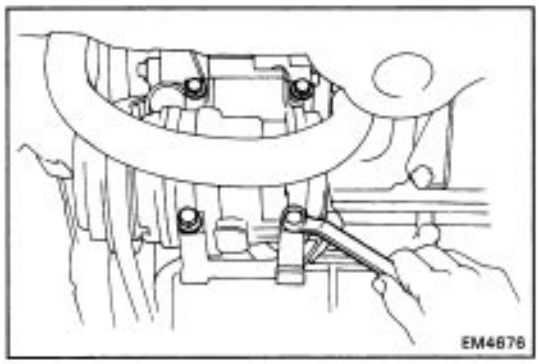

18. (with A/C)

DISCONNECT A/C COMPRESSOR

(a) Loosen the adjusting bolt and remove the drive belt.

(b) Remove the four compressor mounting bolts.

(c) Move the compressor aside and suspend it.

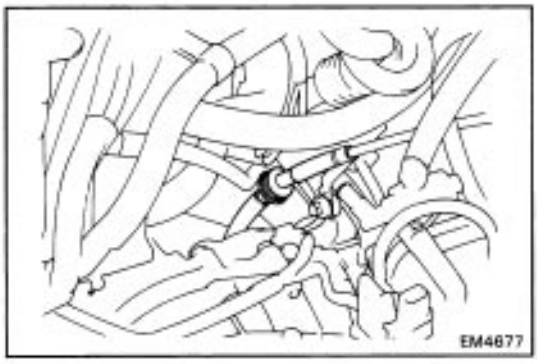

19. DISCONNECT SPEEDOMETER CABLE FROM TRANSAXLE

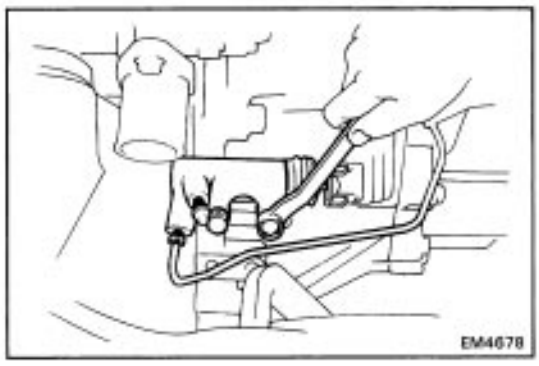

20. (M/T)

REMOVE CLUTCH RELEASE CYLINDER WITHOUT DISCONNECTING PIPE AND HOSE

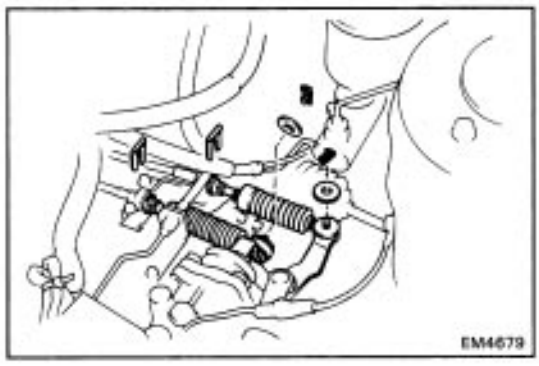

21. (M/T)

DISCONNECT CONTROL CABLES

(a) Remove the two clips, washers and retainers.

(b) Disconnect the control cables from the shift outer lever and select outer lever.

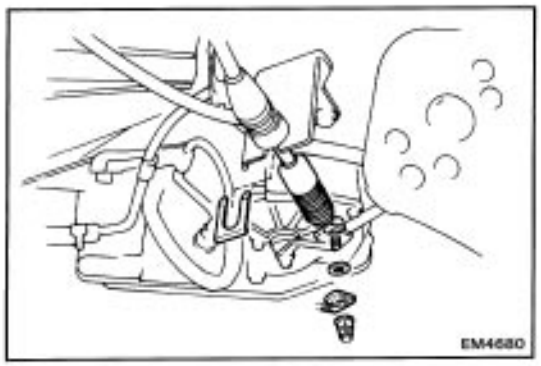

22. (A/T)

DISCONNECT CONTROL CABLE

(a) Remove the clip and retainer.

(b) Disconnect the control cable from the shift lever.

23. RAISE VEHICLE

NOTICE: Be sure the vehicle is securely supported.

24. (4WD)

DISCONNECT OIL COOLER HOSES

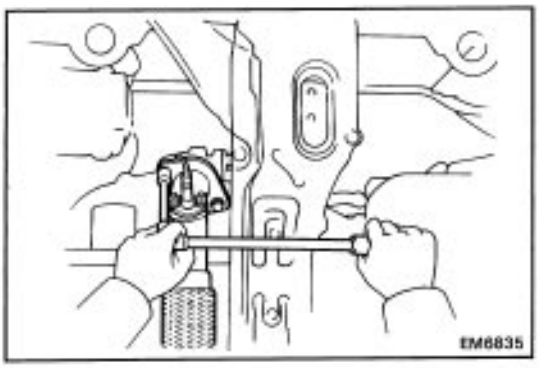

25. REMOVE FRONT EXHAUST PIPE

(a) Disconnect the oxygen sensor connector.

(b) Remove the two bolts and disconnect pipe from the catalyst converter.

(c) Remove the two nuts and exhaust pipe.

26. DISCONNECT DRIVE SHAFTS FROM TRANSAXLE

27. (4WD)

DISCONNECT PROPELLER SHAFT

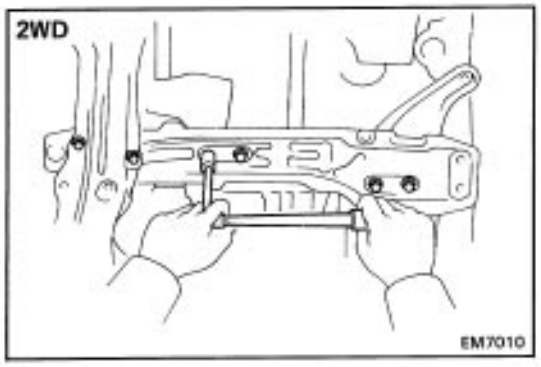

28. DISCONNECT FRONT, CENTER (2WD) AND REAR MOUNTING FROM CENTER MEMBER

(a) Remove the two hole covers.

(b) Remove the six bolts (2WD) or two bolts and two nuts (4WD) from each mounting.

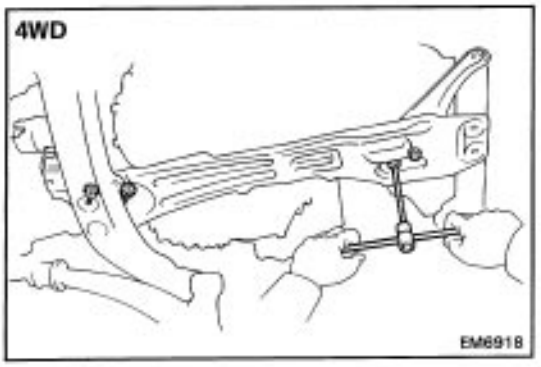

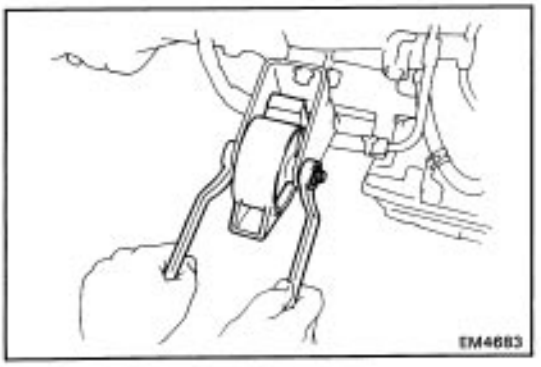

(c) Remove the front mounting bolt and mounting.

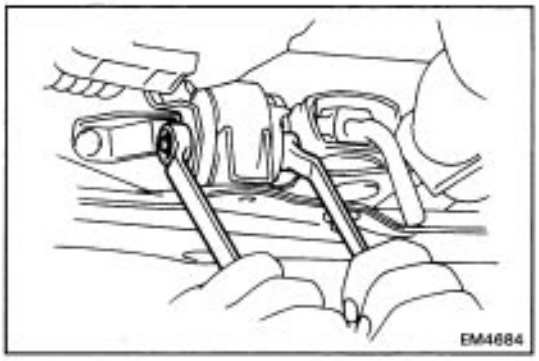

(d) Remove the rear mounting bolt and mounting.

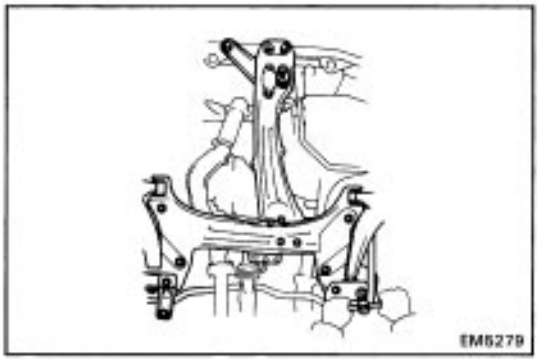

29. (4WD)

REMOVE FRONT SUSPENSION CROSSMEMBER

Remove the eight bolts from the front suspension crossmember.

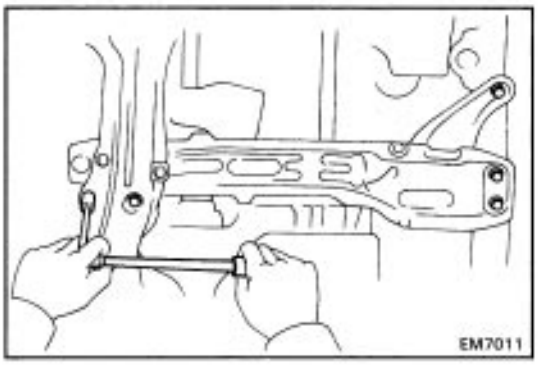

30. REMOVE ENGINE MOUNTING CENTER MEMBER

Remove five bolts (2WD) or four bolts (4WD), insulators and member.

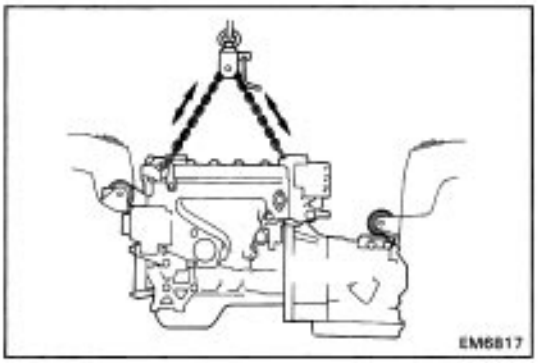

31. REMOVE ENGINE WITH TRANSAXLE FROM VEHICLE

(a) Attach the engine chain hoist to the lifting bracket on the engine.

HINT: Hang the engine wires and hoses on the chain.

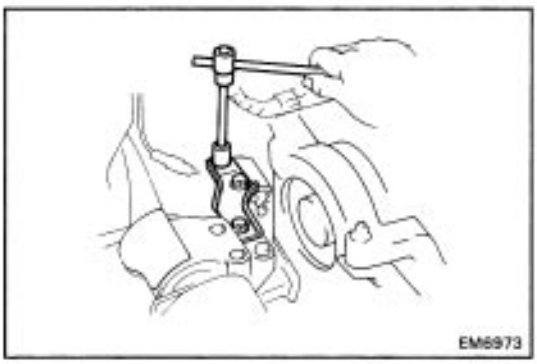

(b) Remove the three bolts and mounting stay.

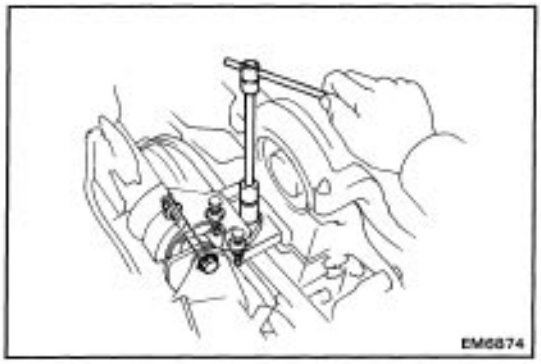

(c) Remove the bolt, two nuts, through bolt and RH mounting.

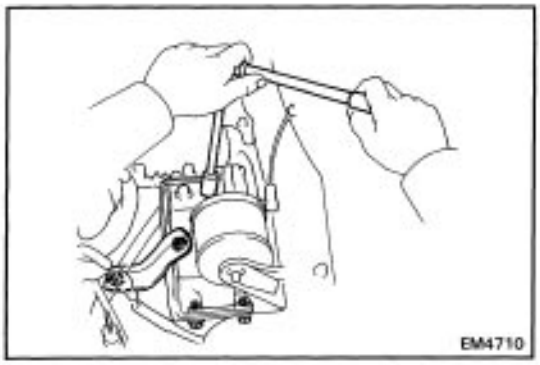

(d) Remove the two bolts and mounting stay.
(e) Remove the three bolts and disconnect the LH mounting bracket from the transaxle bracket.

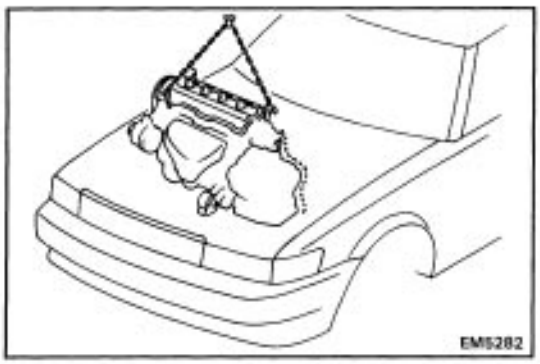

(f) Lift the engine out of the vehicle slowly and carefully.
- Clear the RH mounting while lowering the transaxle.

NOTICE: Be careful not to hit the power steering gear housing and throttle position sensor.

(g) Make sure the engine is clear of all wiring, hoses and cables.
(h) Place the engine with the transaxle onto the stand.

32. DISCONNECT FOLLOWING CONNECTORS:
(a) Back–up lamp switch (M/T)
(b) Neutral start switch (A/T)
33. REMOVE HOLE PLUG FROM REAR END PLATE
34. (A/T)
REMOVE SIX TORQUE CONVERTER MOUNTING BOLTS
35. REMOVE STARTER (See page ST–5)
36. REMOVE TRANSAXLE FROM ENGINE

REMOVAL OF ENGINE (4A–GE)

1. REMOVE BATTERY AND HOOD

2. REMOVE RH AND LH ENGINE UNDER COVER

3. DRAIN ENGINE OIL

4. DRAIN ENGINE COOLANT

5. DRAIN GEAR OIL

6. REMOVE RADIATOR WITH COOLING FAN

(See page CO–13)

7. DISCONNECT ACCELERATOR WIRE FROM BRACKET

8. (w/ CRUISE CONTROL)

REMOVE CRUISE CONTROL ACTUATOR

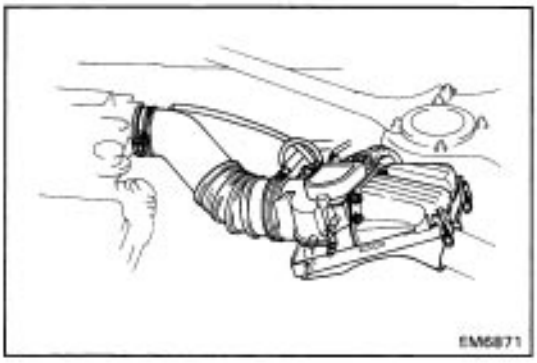

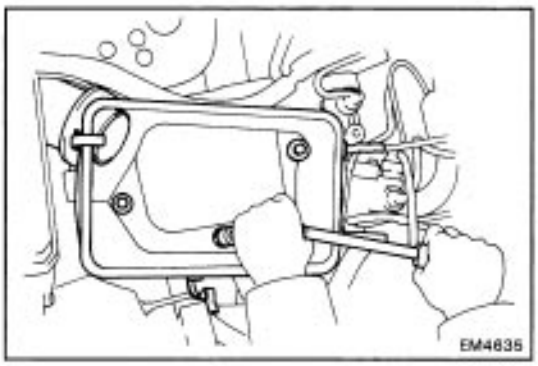

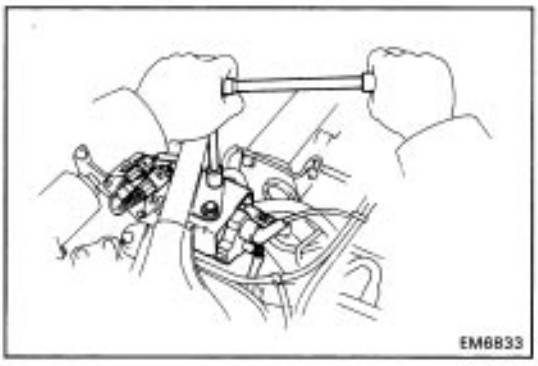

9. REMOVE AIR CLEANER ASSEMBLY

(a) Disconnect the air flow meter connector.

(b) Disconnect the VSV connector.

(c) Disconnect the vacuum hoses from VSV.

(d) (with A/C)

Disconnect the air hose.

(e) Loosen the air cleaner hose clamp bolt.

(f) Disconnect the air cleaner cap clips.

(g) Remove the air cleaner cap and air flow meter with air cleaner hose.

(h) Remove the air cleaner filter element.

(i) Disconnect the harness clamp from the boss, and remove the three bolts and air cleaner case.

(j) Remove the two bolts and air cleaner support bracket.

10. REMOVE WASHER TANK

11. DISCONNECT FOLLOWING HOSES:

(a) Brake booster vacuum hose

(b) Charcoal canister vacuum hose

12. REMOVE IGNITION COIL

(a) Disconnect the ignition coil connectors.

(b) Disconnect the high–tension cord.

(c) Remove the two bolts and the ignition coil with bracket.

13. DISCONNECT ENGINE WIRE

(a) Remove the three nuts, No.2 junction block and No.5 relay block.

(b) Disconnect the following connector:

- Noise filter connector
- Ground strap connector and bolt
- Check connector
- (with A/C)
  A/C wire connector

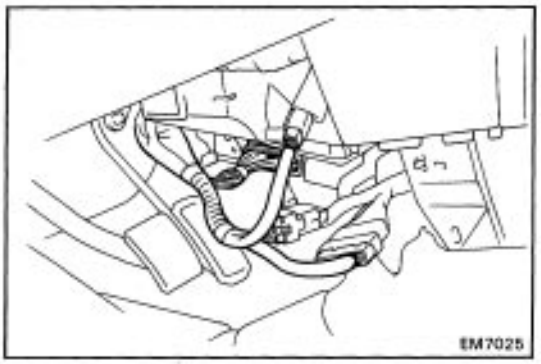

(c) Remove the front and rear console boxes.

(d) Remove the center cover in front of the console box.

(e) Disconnect the five connectors from the cowl wire and ECU .



(f) Pull out the engine wire from the cowl panel.

14. DISCONNECT HEATER WATER HOSES

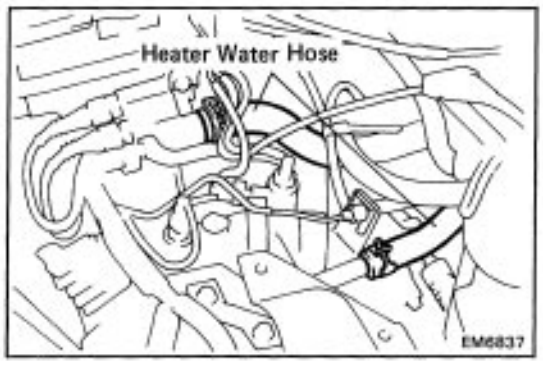

(a) Disconnect the heater hose from the water inlet housing.

(b) Disconnect the heater hose from the cylinder head rear cover.

15. DISCONNECT INLET FUEL HOSE FROM FUEL FILTER

16. DISCONNECT RETURN FUEL HOSE FROM PRESSURE REGULATOR

17. DISCONNECT HEATER AND AIR HOSES FROM AIR VALVE

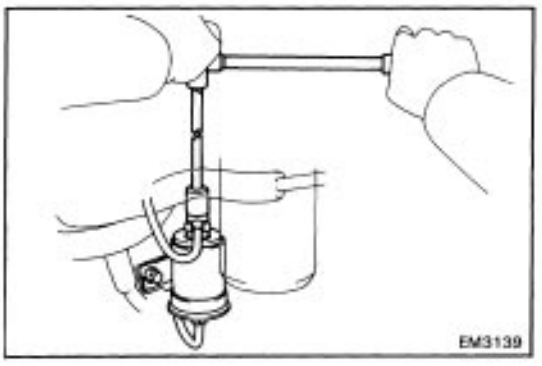

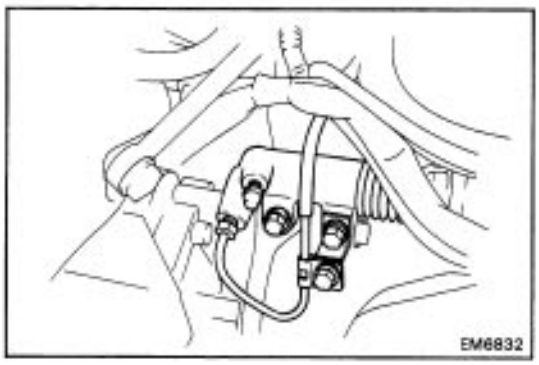

18. REMOVE RELEASE CYLINDER

(a) Remove the three bolts and release tube clamp bolt.
(b) Move the release cylinder aside and suspend it.

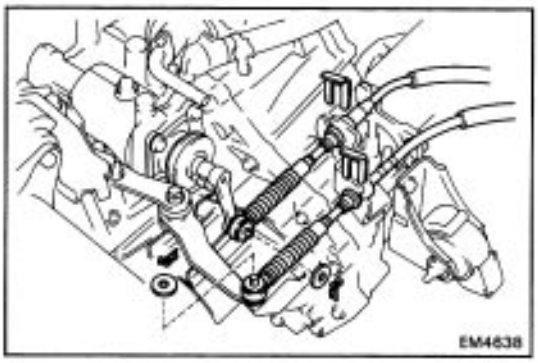

19. DISCONNECT CONTROL CABLES

(a) Remove the two clips, washers and retainers.
(b) Disconnect the control cables from the shift outer lever and select lever.

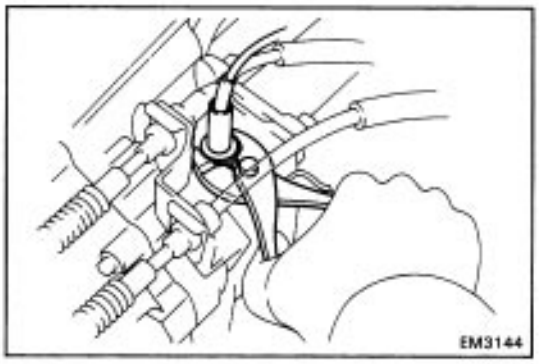

20. DISCONNECT SPEEDOMETER CABLE

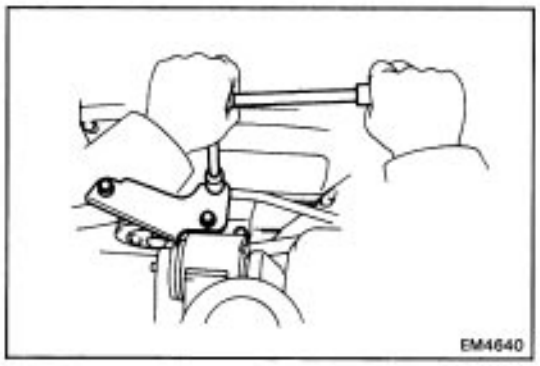

21. (with A/C AND/OR PS)
DISCONNECT A/C COMPRESSOR AND PS PUMP

(a) Remove the three bolts and RH mounting stay.
(b) Remove the PS pump pipe clamp bolt.
(c) Disconnect the two A/C connectors.

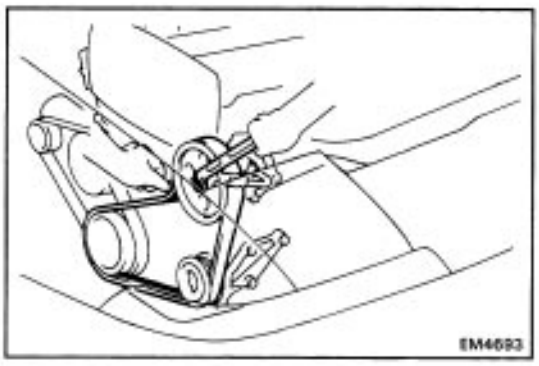

(d) Remove the PS pump pulley nut.

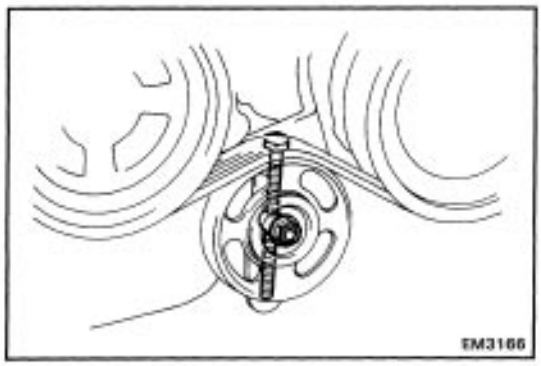

(e) Loosen the idler pulley adjusting bolt and pulley bolt.
(f) Remove the drive belt.

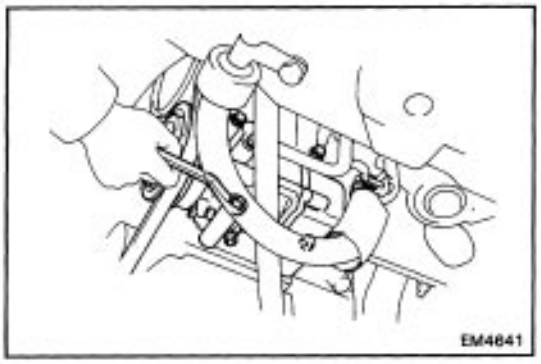

(g) Remove the four compressor mounting bolts.
(h) Move the compressor aside and suspend it.
(i) Loosen the bolts and nut of compressor bracket.
(j) Disconnect oil pressure connector.

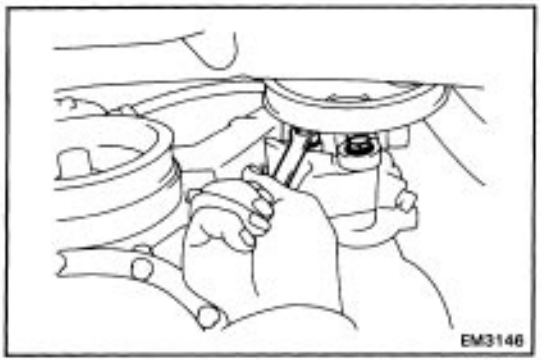

(k) Loosen the PS pump lock bolt and pivot bolts.
(l) Remove the PS pump with the bracket aside and suspend it.

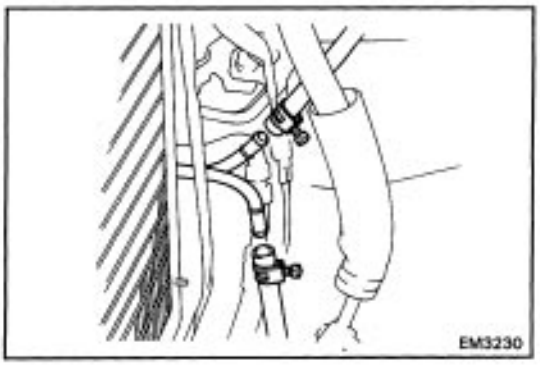

22. DISCONNECT OIL COOLER HOSES

23. RAISE VEHICLE

NOTICE: Be sure the vehicle is securely supported.

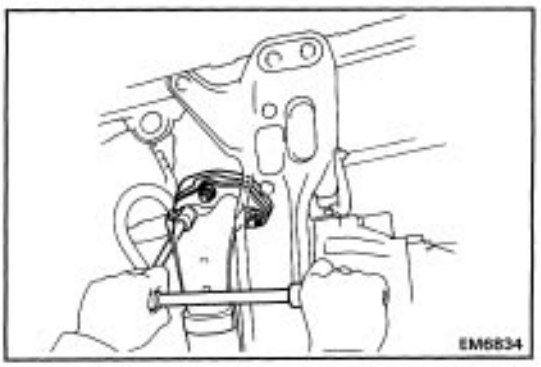

24. REMOVE EXHAUST FRONT PIPE

(a) Disconnect the oxygen sensor connector.
(b) Remove the two bolts from the pipe clamp.
(c) Remove the two bolts, and disconnect the exhaust pipe from the catalyst converter.
(d) Remove the three nuts and exhaust pipe.

25. DISCONNECT RH AND LH DRIVE SHAFTS FROM TRANSAXLE

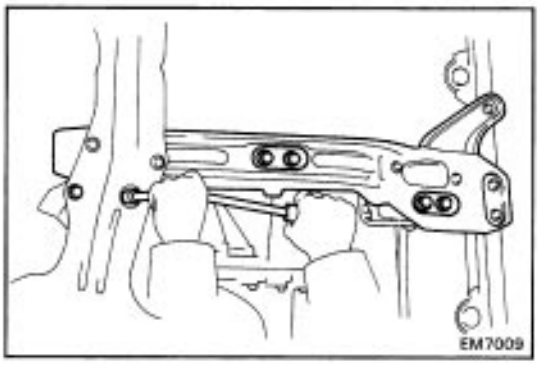

26. DISCONNECT FRONT, CENTER AND REAR MOUNTING FROM MEMBER

(a) Remove the two hole covers.

(b) Remove the six bolts from each mounting.

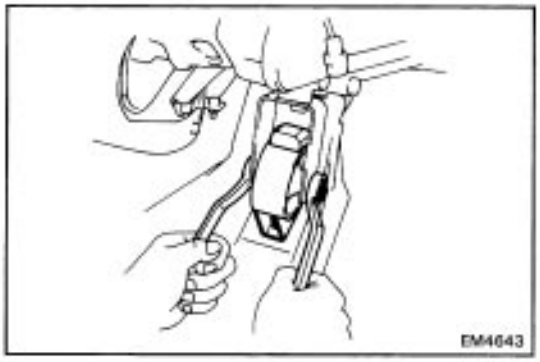

(c) Remove the front mounting bolt and mounting.

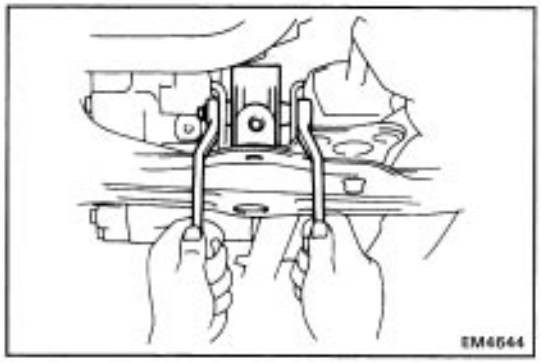

(d) Remove the rear mounting bolt and mounting.

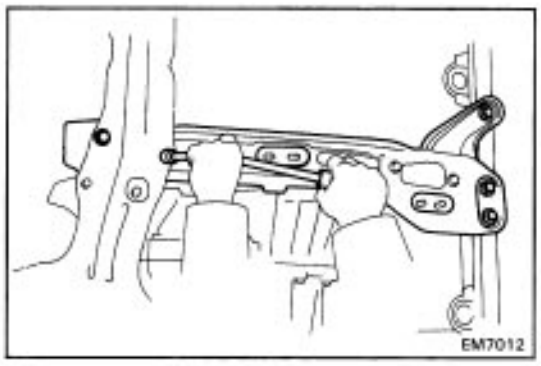

27. REMOVE ENGINE MOUNTING CENTER MEMBER

Remove the five bolts, insulators and center member.

28. LOWER VEHICLE

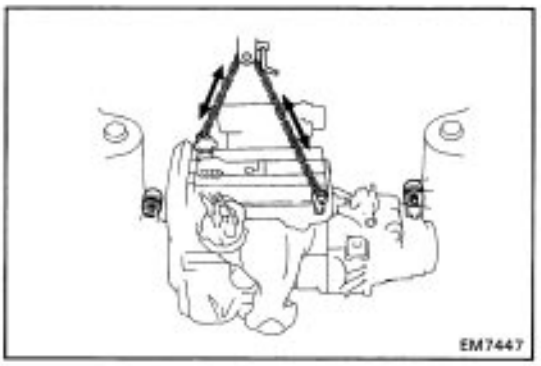

29. REMOVE ENGINE WITH TRANSAXLE FROM VEHICLE

(a) Attach the engine hoist chain to the lifting bracket on the engine.

HINT: Hang the engine wires and hoses on the chain.

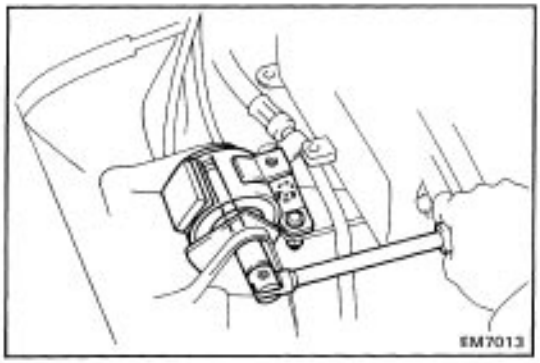

(b) Remove the two nuts, through bolt and RH mounting.

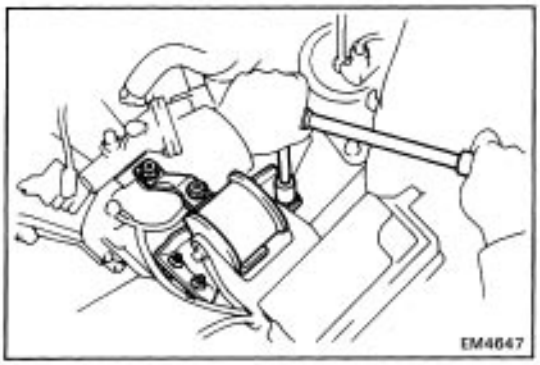

(c) Remove the two bolts and mounting stay.
(d) Remove the three bolts and disconnect the LH mounting bracket from transaxle bracket.

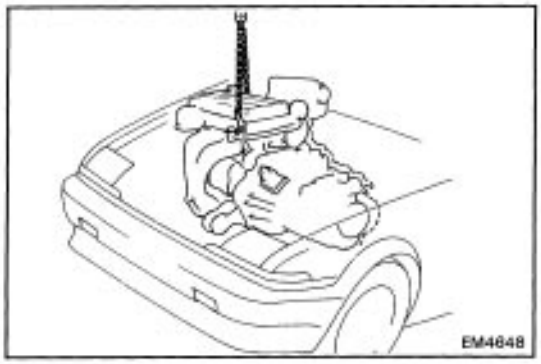

(e) Lift the engine out of the vehicle slowly and carefully.
- Clear the RH mounting while lowering the transaxle.

NOTICE: Be careful not to hit the power steering gear housing and throttle position sensor.

(f) Make sure the engine is clear of all wiring, hoses and cables.
(g) Place the engine with the transaxle onto the stand.

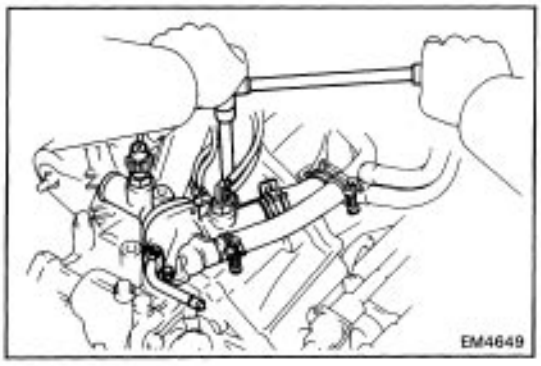

30. REMOVE WATER INLET HOUSING

(a) Disconnect the radiator fan temperature switch connector and start injector time switch connector.
(b) Disconnect the vacuum hose from BVSV.
(c) Remove the water inlet housing mounting bolts and nut.
(d) Disconnect the two hoses from the No. 1 and No.2 water by–pass pipes, and remove the water inlet housing.

31. DISCONNECT FOLLOWING CONNECTORS:

(a) Back–up lamp switch
(b) Water temperature sensor

32. REMOVE FLYWHEEL HOUSING UNDER COVER

33. REMOVE STARTER (See page ST–5)

34. REMOVE TRANSAXLE FROM ENGINE

PREPARATION FOR DISASSEMBLY (4A–FE)

1. (M/T)
   REMOVE CLUTCH COVER AND DISC
2. REMOVE FLYWHEEL OR DRIVE PLATE
3. REMOVE REAR END PLATE
4. INSTALL ENGINE ASSEMBLY TO ENGINE STAND FOR DISASSEMBLY
5. (w/ PS)
   REMOVE PS PUMP BRACKET
6. (with A/C)
   REMOVE A/C COMPRESSOR MOUNT
7. REMOVE ALTERNATOR AND BRACKET
8. REMOVE TIMING BELT AND TIMING PULLEY
   (See page EM–30)
9. REMOVE RH MOUNTING BRACKET
10. REMOVE CYLINDER HEAD
    (See page EM–54)
11. REMOVE WATER PUMP
    (See page CO–6)
12. REMOVE OIL PAN, OIL STRAINER AND OIL PUMP
    (See page LU–9)
13. REMOVE OIL FILTER
    (See page LU–7)
14. REMOVE OIL PRESSURE SWITCH

PREPARATION FOR DISASSEMBLY (4A–GE)

1. REMOVE CLUTCH COVER AND DISC
2. REMOVE FLYWHEEL
3. REMOVE REAR END PLATE
4. INSTALL ENGINE ASSEMBLY TO ENGINE STAND FOR DISASSEMBLY
5. REMOVE OIL COOLER HOSES AND UNION PIPES
6. REMOVE TIMING BELT AND TIMING PULLEYS
   (See page EM–41)
7. REMOVE ALTERNATOR AND BRACKET
8. REMOVE CYLINDER HEAD
   (See page EM–89)
9. REMOVE WATER PUMP
   (See page CO–6)
10. REMOVE OIL PAN, STRAINER, BAFFLE PLATE AND OIL PUMP
    (See page LU–9)
11. REMOVE OIL FILTER BRACKET
    (See page LU–7)
12. REMOVE OIL PRESSURE SENDER GAUGE
    (See page LU–5)
13. REMOVE KNOCK SENSOR
14. REMOVE STIFFENER PLATE ADAPTER

DISASSEMBLY OF CYLINDER BLOCK

(See page EM–117)

1. REMOVE REAR OIL SEAL RETAINER

Remove the six bolts, retainer and gasket.

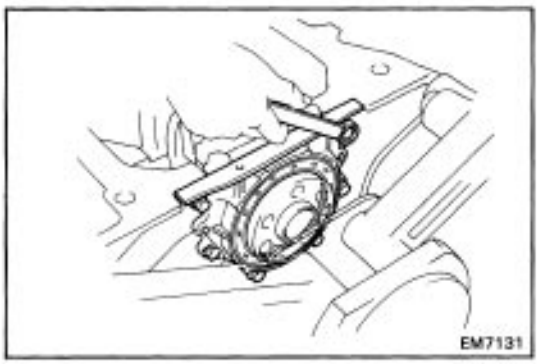

2. CHECK CONNECTING ROD THRUST CLEARANCE

Using a dial indicator, measure the thrust clearance while moving the connecting rod back and forth.

Standard thrust clearance: 0.150 – 0.250 mm (0.0059 – 0.0098 in.)

Maximum thrust clearance: 0.30 mm (0.0118 in.)

If the thrust clearance in greater than maximum, replace the connecting rod assembly. If necessary, replace the crankshaft.

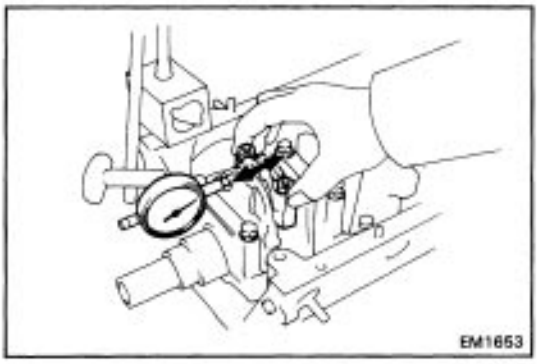

3. REMOVE CONNECTING ROD CAPS AND CHECK OIL CLEARANCE

(a) Using a punch or numbering stamp, place the match-marks on the connecting rod and cap to ensure correct reassembly.

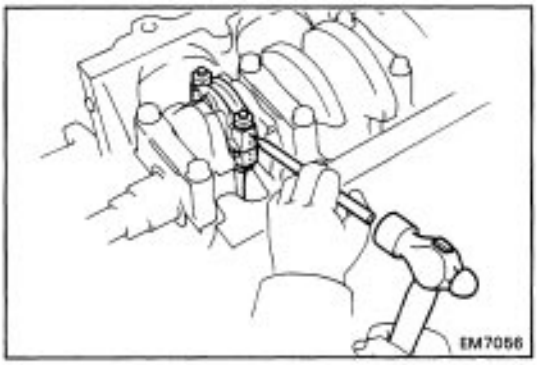

(b) Remove the connecting rod cap nuts.

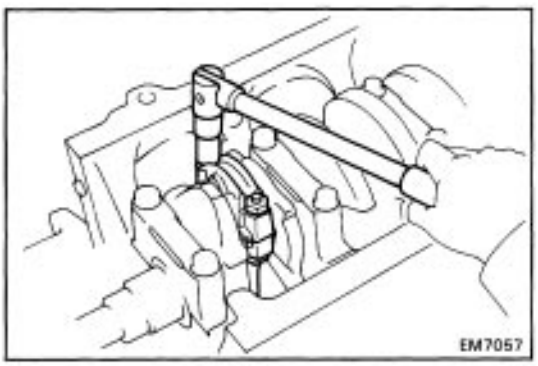

(c) Using a plastic–faced hammer, lightly tap the connecting rod bolts and lift off the connecting rod cap.

HINT: Keep the lower bearing inserted with the connecting cap.

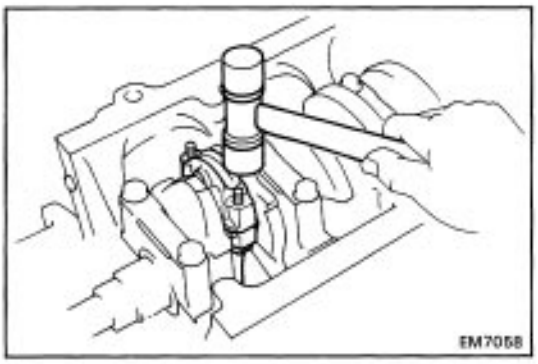

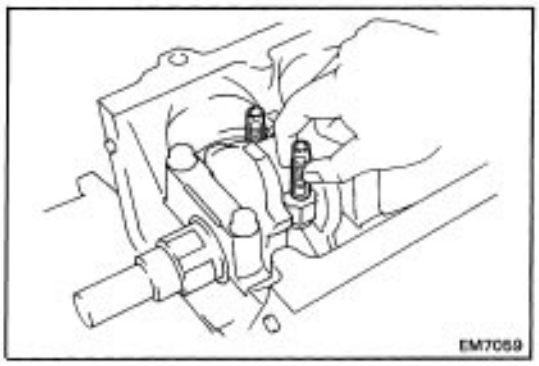

(d) Cover the connecting rod bolts with a short piece of hose to protect the crankshaft from damage.

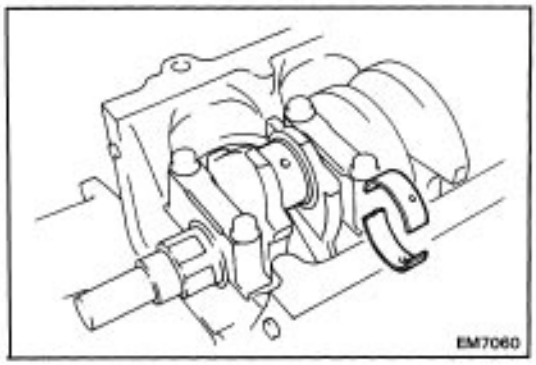

(e) Clean crank pin and bearing.
(f) Check the crank pin and bearing for pitting and scratches.

If the crank pin or bearing is damaged, replace the bearings. If necessary, grind or replace the crankshaft.

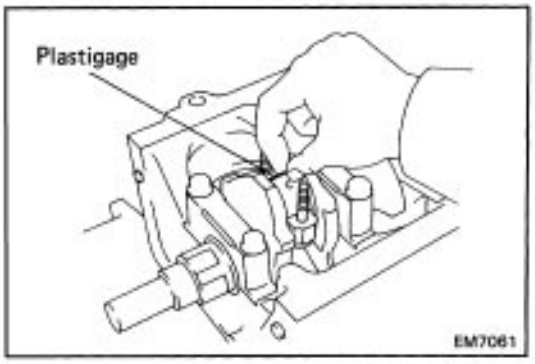

(g) Lay a strip of Plastigage across the crank pin.

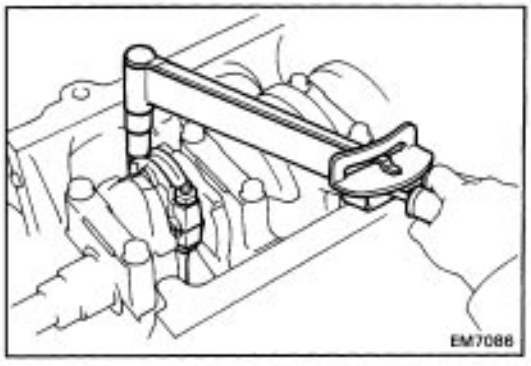

(h) Install the connecting rod cap.
(See step 7 on page EM–1 54)

NOTICE: Do not turn the crankshaft.

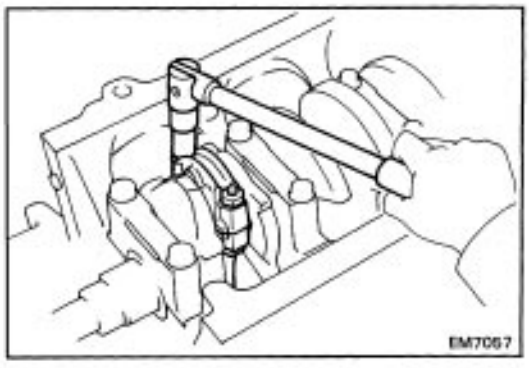

(i) Remove the connecting rod cap.
(See procedure (b) and (c) above)

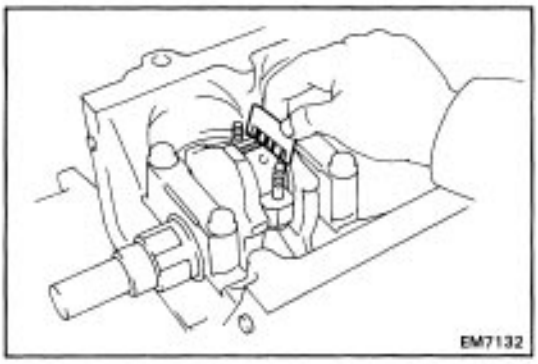

(j) Measure the Plastigage at its widest point.

Standard oil clearance:

STD	**0.020 – 0.051 mm (0.0008 – 0.0020 in.)**
U /S 0.25	**0.019 – 0.065 mm (0.0007 – 0.0026 in.)**
Maximum oil clearance:	**0.08 mm (0.0o31 in.)**

If the oil clearance is greater than maximum, replace the bearings. If necessary, grind or replace the crankshaft.

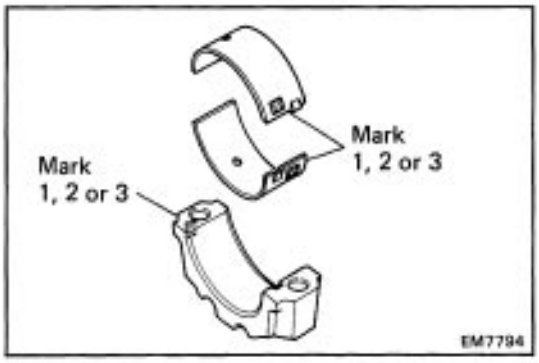

HINT: If using a standard bearing, replace it with one having the same number marked on the connecting rod cap. There are three sizes of standard bearings, marked ”l,” ”2” and ”3” accordingly.

(Reference)

Standard sized bearing center wall thickness:

Mark ”1 ”	**1.486 – 1.490 mm (0.0585 – 0.0587 in.)**
Mark ”2”	**1.490 – 1.494 mm (0.0587 – 0.0588 in.)**
Mark ”3”	**1.494 – 1.498 mm (0.0588 – 0.0590 in.)**

(k) Completely remove the Plastigage.

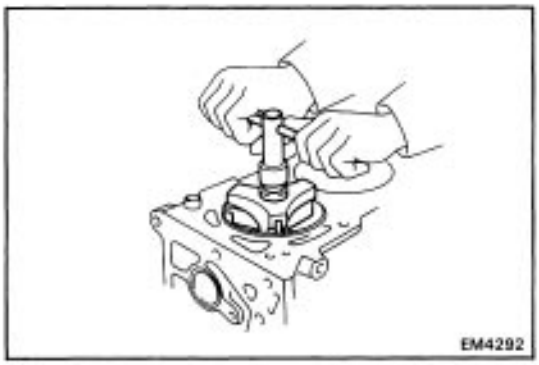

4. REMOVE PISTON AND CONNECTING ROD ASSEMBLIES

(a) Using a ridge reamer, remove all the carbon from the top of the cylinder.

(b) Cover the connecting rod bolts.

(See page EM–133)

(c) Push the piston, connecting rod assembly and upper bearing through the top of the cylinder block.

HINT:

- Keep the bearings, connecting rod and cap together.
- Arrange the piston and connecting rod assemblies in correct order.

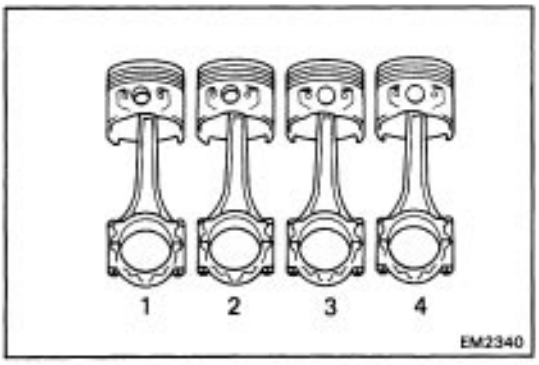

5. CHECK CRANKSHAFT THRUST CLEARANCE

Using a dial indicator, measure the thrust clearance while prying the crankshaft back and forth with a screwdriver.

Standard thrust clearance: 0.020 – 0.220 mm (0.0008 – 0.0087 in.)

Maximum thrust clearance: 0.30 mm (0.0118 in.)

If the thrust clearance is greater than maximum, replace the thrust washers as a set.

Thrust washer thickness: 2.440 – 2.490 mm (0.0961 – 0.0980 in.)

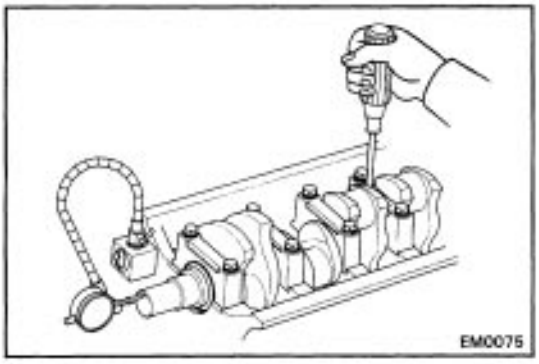

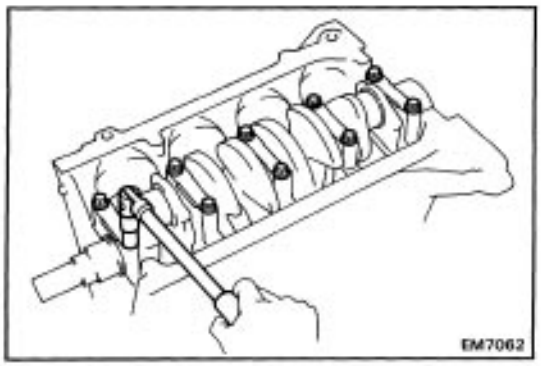

6. REMOVE MAIN BEARING CAPS AND CHECK OIL CLEARANCE

(a) Remove the main bearing cap bolts.

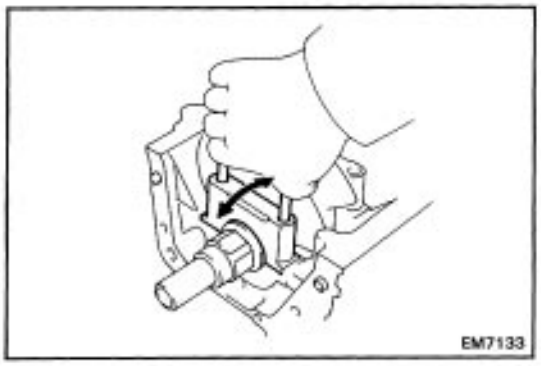

(b) Using the removed main bearing cap bolts, pry the main bearing cap back and forth, and remove the main bearing caps, lower bearings and lower thrust washers (No–3 main bearing cap only).

HINT:

- Keep the lower bearing and main bearing cap together.
- Arrange the main bearing caps and lower thrust washers in correct order.

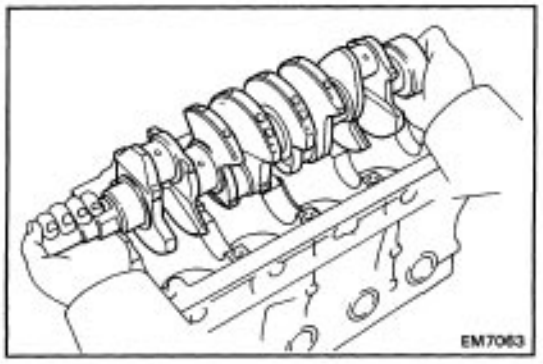

(c) Lift out the crankshaft.

HINT: Keep the upper bearing and upper thrust washers together with the cylinder block.

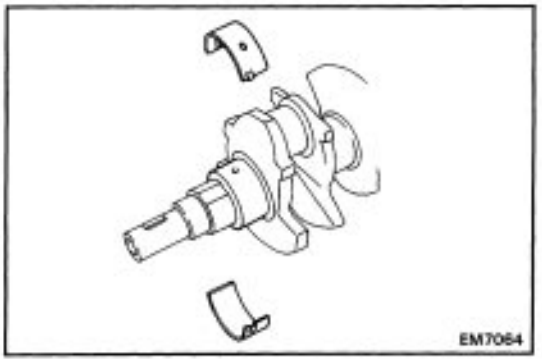

(d) Clean each main journal and bearing.

(e) Check each main journal and bearing for pitting and scratches.

If the journal or bearing is damaged, replace the bearings.

If necessary, grind or replace the crankshaft.

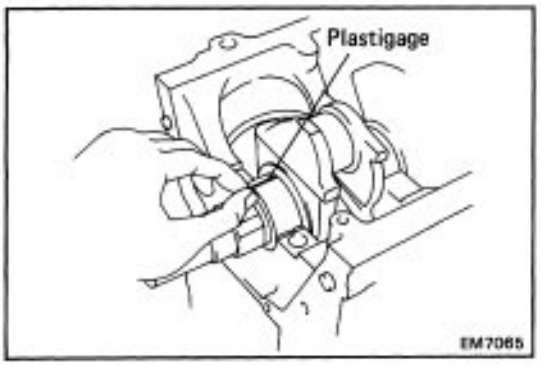

(f) Place the crankshaft on the cylinder block.

(g) Lay a strip of Plastigage across each journal.

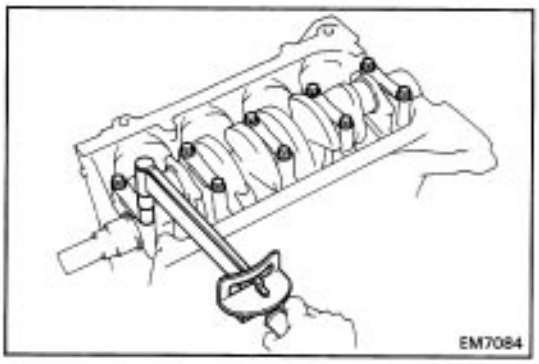

(h) Install the main bearing caps.
(See step 5 on page EM–1 53)
Torque: 610 kg–cm (44 ft–lb, 60 N–m)
NOTICE: Do not turn the crankshaft.

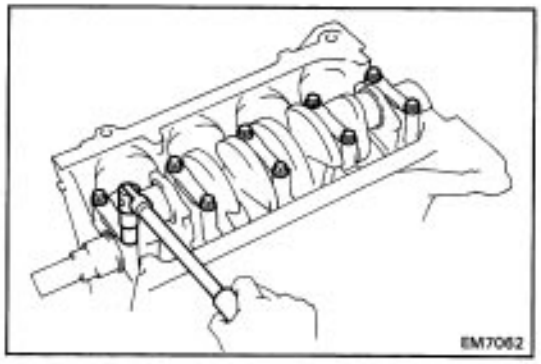

(i) Remove the main bearing caps.
(See procedure (a) and (b) above)

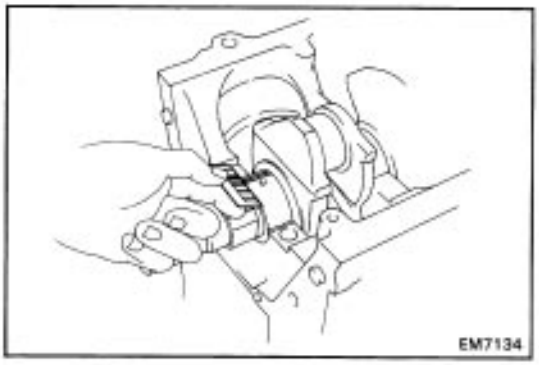

(j) Measure the Plastigage at its widest point.
Standard clearance:

STD	**0.015 – 0.033 mm (0.0006 – 0.0013 in.)**
U/S 0.25	**0.018 – 0.056 mm (0.0007 – 0.0022 in.)**

Maximum clearance: 0.10 mm (0.0039 in.)
HINT: If replacing the cylinder block subassembly, the bearing standard clearance will be:
0.015 – 0.045 mm
(0.0006 – 0.0018 in.)
If the oil clearance is greater than maximum, replace the bearings. If necessary, grind or replace the crankshaft.
HINT: If using a standard bearing, replace with one having the same number. If the number of the bearing cannot be determined, select the correct bearing by adding together the numbers imprinted on the cylinder block and crankshaft, then select the bearing with the same number as the total. There are five sizes of standard bearings, marked “1,” “2,” “3,” “4” and “5” accordingly.

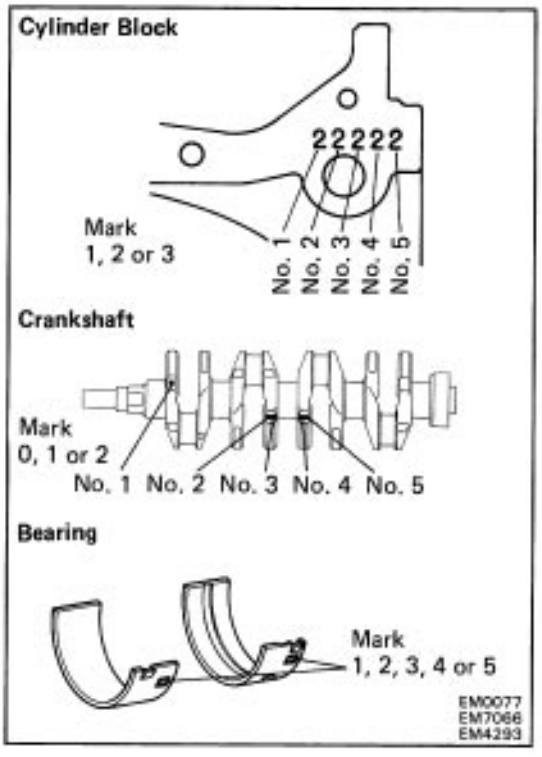

	Number marked								
Cylinder block	1			2			3		
Crankshaft	0	1	2	0	1	2	0	1	2
Bearing	1	2	3	2	3	4	3	4	5

EXAMPLE: Cylinder block “2” + Crankshaft “1”
= Bearing ”3”

(Reference)

Cylinder block main journal bore diameter:

Mark ”1 ”	**52.025 – 52.031 mm (2.0482 – 2.0485 in.)**
Mark ”2”	**52.031 – 52.037 mm (2.0485 – 2.0487 in.)**
Mark ”3’	**52.037 – 52.043 mm (2.0487 – 2.0489 in.)**

Crankshaft journal diameter:

Mark ”0”	**47.994 – 48.000 mm (1.8895 – 1.8898 in.)**
Mark ”1”	**47.988 – 47.994 mm (1.8893 –1.8895 in.)**
Mark ”2”	**47.982 – 47.988 mm (1.8891 – 1.8893 in.)**

Standard sized bearing center wall thickness:

Mark ”1 ”	**2.002 – 2.005 mm (0.0788 – 0.0789 in.)**
Mark ”2”	**2.005 – 2.008 mm (0.0789 – 0.0791 in.)**
Mark ”3”	**2.008 – 2.011 mm (0.0791 – 0.0792 in.)**
Mark ”4”	**2.011 – 2.014 mm (0.0792 – 0.0793 in.)**
Mark ”5”	**2.014 – 2.017 mm (0.0793 – 0.0794 in.)**

(k) Completely remove the Plastigage.

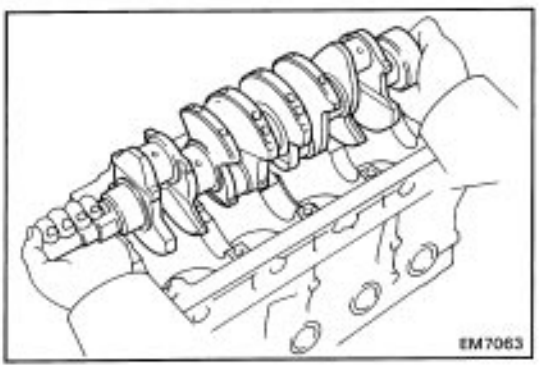

7. REMOVE CRANKSHAFT

(a) Lift out the crankshaft.

(b) Remove the upper bearings and upper thrust washers from cylinder block.

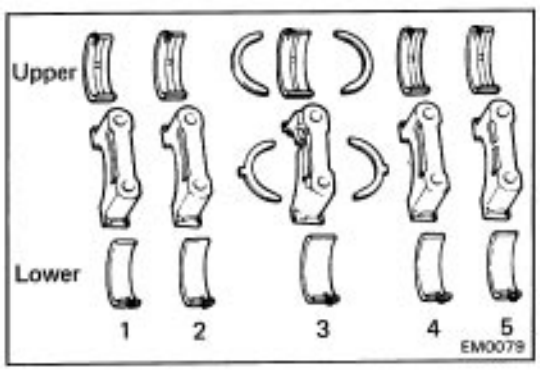

HINT: Arrange the main bearing caps, bearings and thrust washers in correct order.

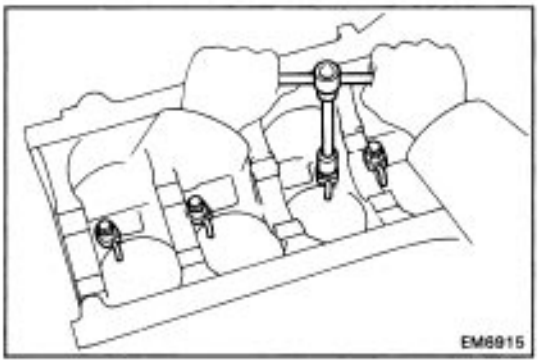

8. (4A–GE)

REMOVE CHECK VALVE AND OIL NOZZLES

Remove the four check valves and oil nozzles.

INSPECTION OF CYLINDER BLOCK

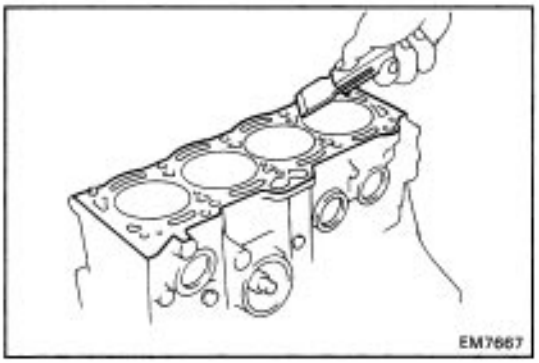

1. CLEAN CYLINDER BLOCK

A. Remove gasket material

Using a gasket scraper, remove all the gasket material from the top surface of the cylinder block.

B. Clean cylinder block

Using a soft brush and solvent, thoroughly clean the cylinder block.

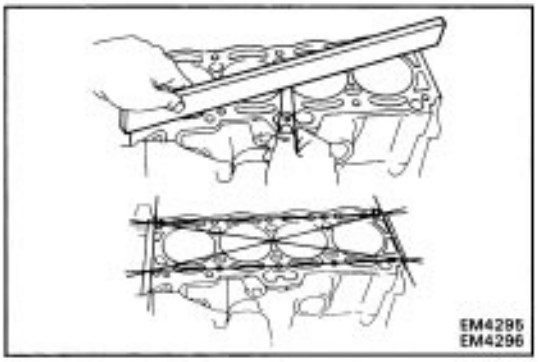

2. INSPECT TOP SURFACE OF CYLINDER BLOCK FOR FLATNESS

Using a precision straight edge and feeler gauge, measure the surfaces contacting the cylinder head gasket for warpage.

Maximum warpage: 0.05 mm (0.0020 in.)

If warpage is greater than maximum, replace the cylinder block.

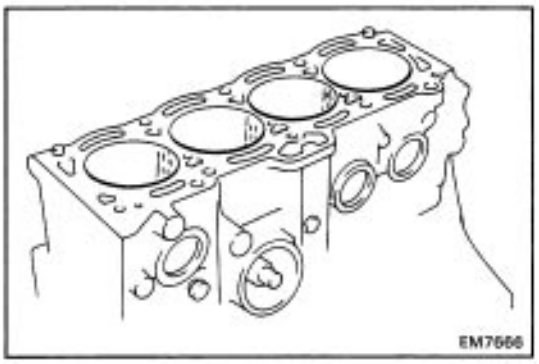

3. INSPECT CYLINDER FOR VERTICAL SCRATCHES

Visually check the cylinder for vertical scratches.

If deep scratches are present, rebore all the four cylinders. If necessary, replace the cylinder block.

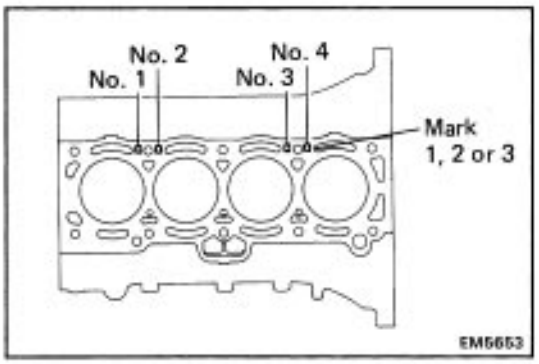

4. INSPECT CYLINDER BORE DIAMETER

HINT: There are three sizes of the standard cylinder bore diameter, marked “1”, “2” and “3” accordingly. The mark is stamped on the top of the cylinder block.

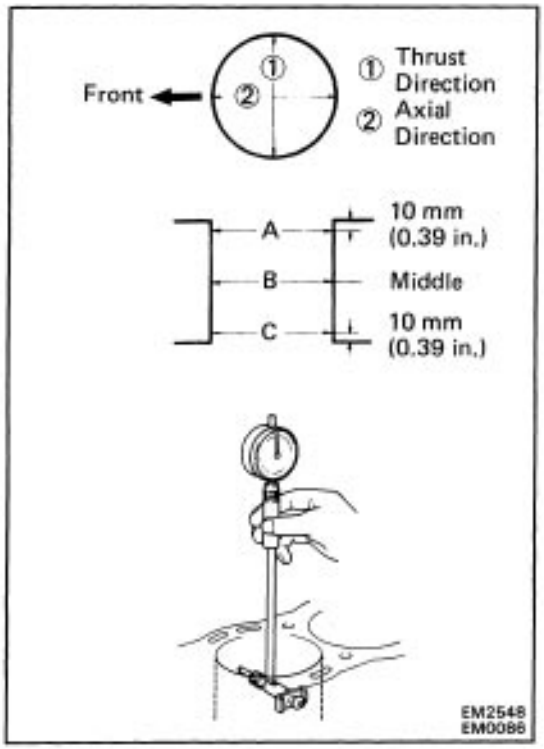

Using a cylinder gauge, measure the cylinder bore diameter at positions A, B and C in the thrust axial directions.

Standard diameter:

STD Mark "1"	**81.000 – 81.010 mm (3.1890 – 3.1894 in.)**
Mark "2"	**81.010 – 81.020 mm (3.1894 – 3.1902 in.)**
Mark "3"	**81.020 – 81.030 mm (3.1898 – 3.1264 in.)**
Maximum diameter:	
STD	**81.23 mm (3.1980 in.)**
O/S 0.50	**81.73 mm (3.2177 in.)**

If the diameter is greater than maximum, rebore all the four cylinders. If necessary, replace the cylinder block.

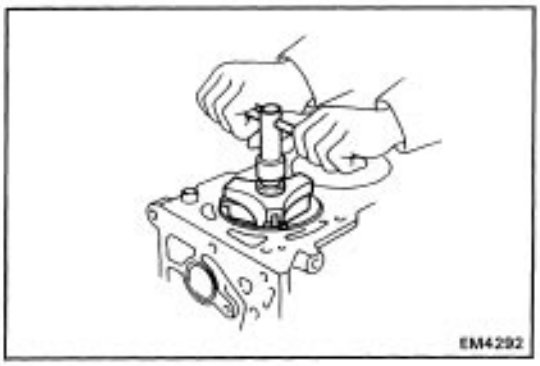

5. REMOVE CYLINDER RIDGE

If the wear is less than 0.2 mm (0.008 in.), using a ridge reamer, grind the top of the cylinder.

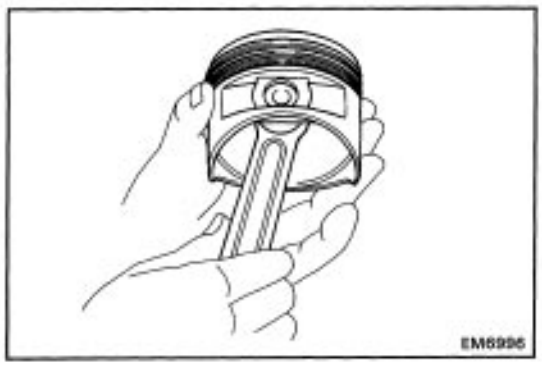

DISASSEMBLY OF PISTON AND CONNECTING ROD ASSEMBLIES

1. CHECK FIT BETWEEN PISTON AND PISTON PIN

Try to move the piston back and forth on the piston pin. If the piston does not move at all, replace the piston and pin as a set.

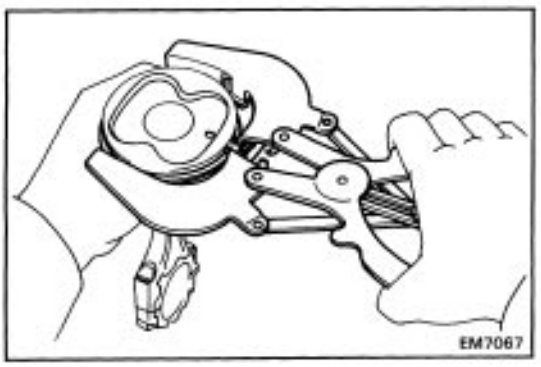

2. REMOVE PISTON RINGS

(a) Using a piston ring expander, remove the two compression rings.

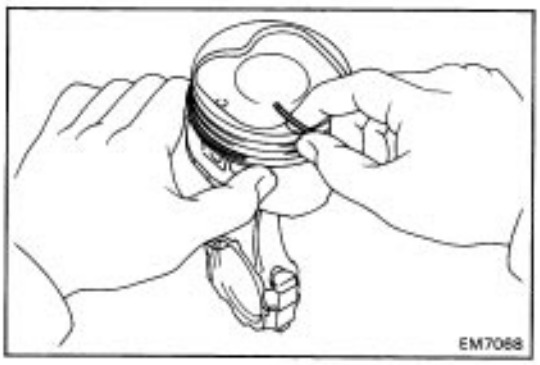

(b) Remove the two side rails and oil ring expander by hand.

HINT: Arrange the rings in correct order only.

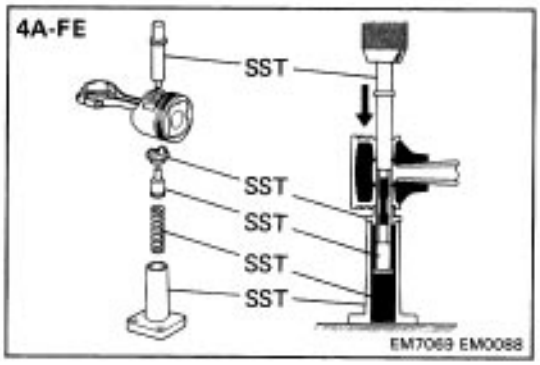

3. DISCONNECT CONNECTING ROD FROM PISTON

(4A–FE)

Using SST, press out the piston pin from the piston. Remove the connecting rod.

SST 09221–25024 (09221–00020, 09221–00030, 09221–00050, 09221–00130, 09221–00140)

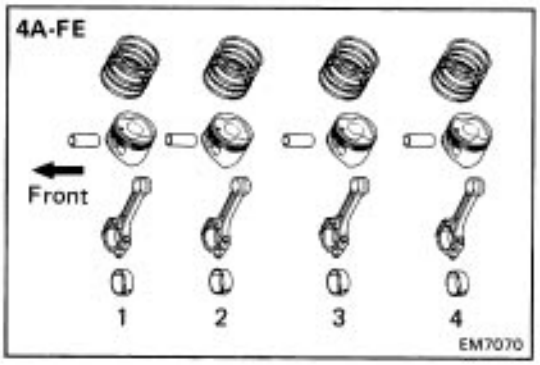

HINT:

- The piston and pin are a matched set.
- Arrange the pistons, pins, rings, connecting rods and bearings in correct order.

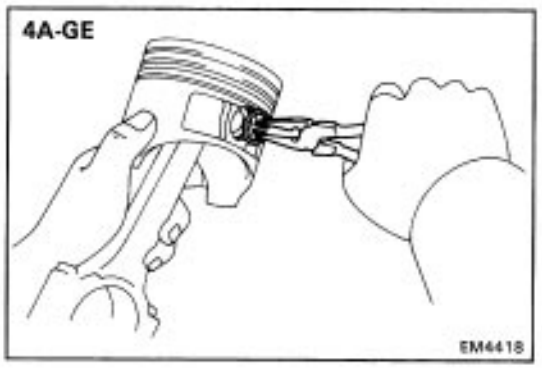

(4A–GE)

(a) Using needle–nose pliers, remove the snap rings.

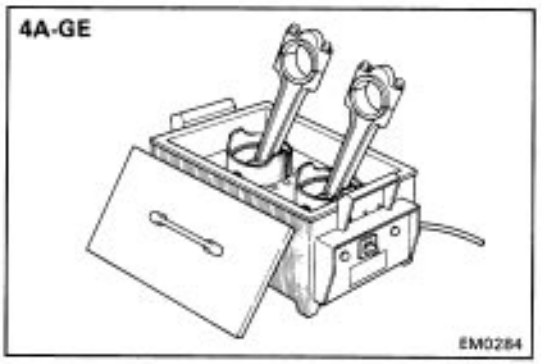

(b) Gradually heat the piston to 70 – 80˚C (158 – 176˚F).

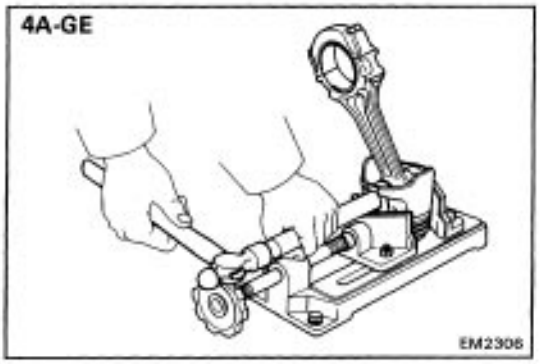

(c) Using a plastic–faced hammer and brass bar, lightly tap out the piston pin and remove the connecting rod.

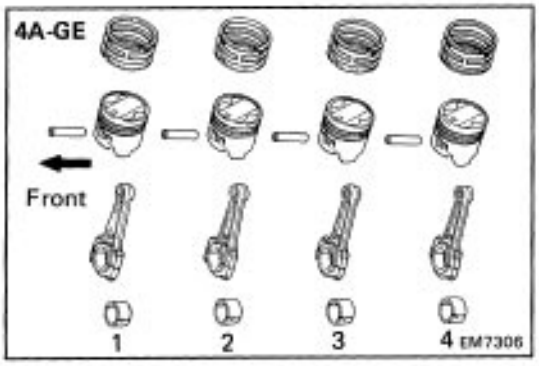

HINT:
- The piston and pin are a matched set.
- Arrange the pistons, pins, rings, connecting rods and bearings in correct order.

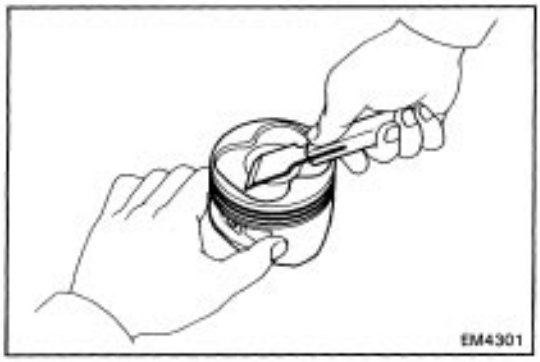

INSPECTION OF PISTON AND CONNECTING ROD ASSEMBLIES

1. CLEAN PISTON

(a) Using a gasket scraper, remove the carbon from the piston top.

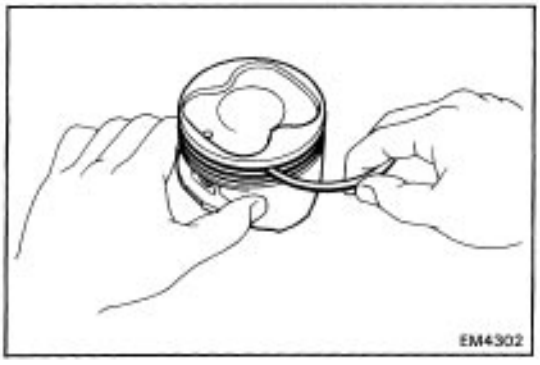

(b) Using a groove cleaning or broken ring, clean the piston ring grooves.

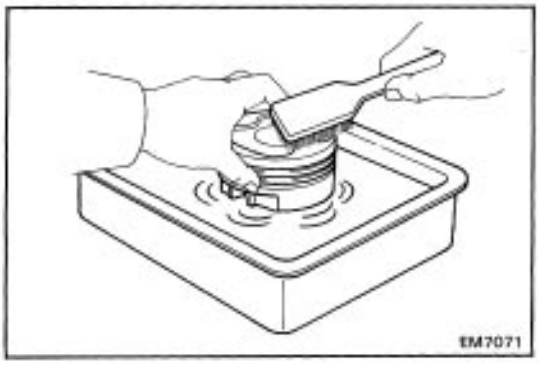

(c) Using solvent and a brush, thoroughly clean the piston.
NOTICE: Do not use a wire brush.

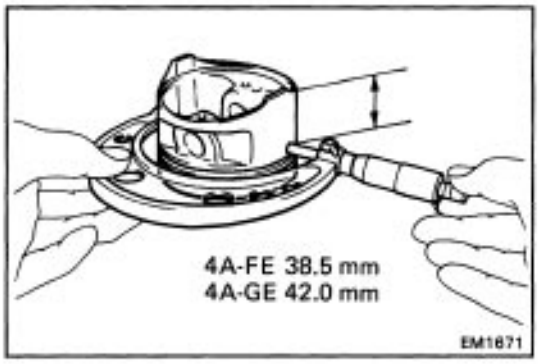

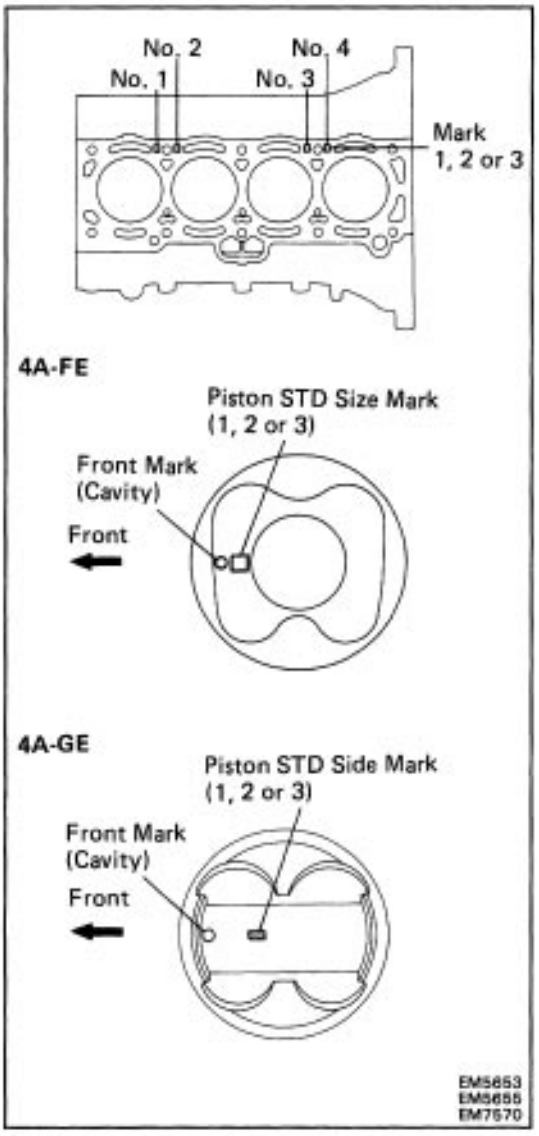

2. INSPECT PISTON

A. Inspect piston oil clearance

HINT: There are three sizes of the standard piston diameter, marked ” 1 ”, ”2” and ”3” accordingly. The mark is stamped on the piston top.

(a) Using a micrometer and with the piston upside down, measure the piston diameter at a right angle to the piston pin hole center line, the indicated distance from the skirt of the bottom edge.

4A–FE 38.5 mm 0.576 in.)

4A–GE 42.0 mm (1.654 in.)

Piston diameter:

4A–FE

STD	**Mark ”1”**	**80.93 – 80.94 mm (3.1862 – 3.1866 in.)**
	Mark ”2”	**80.94 – 80.950 mm (3.1866 – 3.187 in.)**
	Mark ”3”	**80.95 – 80.96 mm (3.1870 – 3.1874 in.)**
O/S 0.50		**81.43 – 81.46 mm (3.2059 – 3.2071 in.)**

4A–GE

STD	**Mark ”1”**	**80.89 – 80.90 mm (3.1846 – 3.1850 in.)**
	Mark ”2”	**80.90 – 80.91 mm (3.1850 – 3.1854 in.)**
	Mark ”3”	**80.91 – 80.92 mm (3.1854 – 3.1858 in.)**
O/S 0.50		**81.39 – 81.42 mm (3.2043 – 3.2055 in.)**

(b) Measure the cylinder bore diameter in the thrust directions.

(See step 4 on page EM–1 38)

(c) Subtract the piston diameter measurement from the cylinder bore diameter measurement.

Standard oil clearance:

4A–FE 0.06 – 0.08 mm (0.0024 – 0.031 in.)

4A–GE 0.10 – 0.12 mm (0.0039 – 0.0047 in.)

Maximum oil clearance:

4A–FE 0.10 mm (0.0039 in.)

4A–GE 0.15 mm (0.0059 in.)

If the oil clearance is greater than maximum, replace all the four pistons and rebore all the four cylinders. If necessary, replace the cylinder block.

HINT: (Use new cylinder block): Use a piston with the same number mark as the cylinder bore diameter marked on the cylinder block.

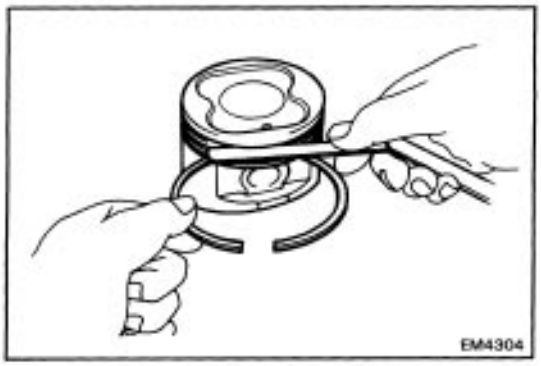

B. Inspect piston ring groove clearance

Using a feeler gauge, measure the clearance between new piston ring and the wall of the piston ring groove.

Ring groove clearance:

4A–FE	**No.1**	**0.04 – 0.08 mm (0.0016 – 0.0031 in.)**
	No.2	**0.03 – 0.07 mm (0.0012 – 0.0028 in.)**
4A–GE	**No.1**	**0.03 – 0.08 mm (0.0012 – 0.0031 in.)**
	No.2	**0.03 – 0.07 mm (0.0012 – 0.0028 in.)**

If the clearance is greater than maximum, replace the piston.

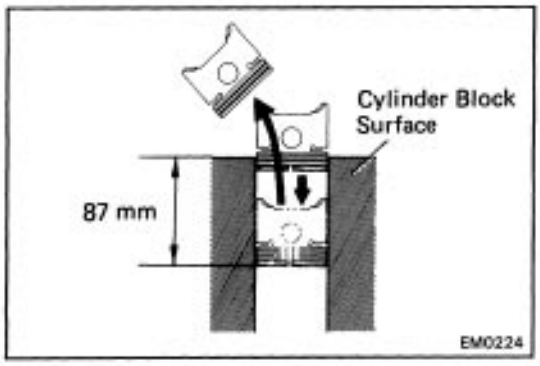

C. Inspect piston ring end gap

(a) Insert the piston ring into the cylinder bore.

(b) Using a piston, push the piston ring a little beyond the bottom of the ring travel, 87 mm (3.43 in.) from the top of the cylinder block.

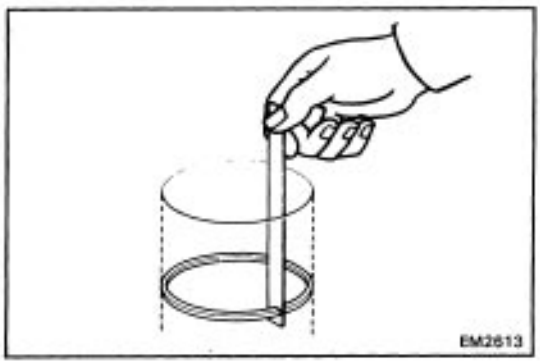

(c) Using a feeler gauge, measure the end gap.

Standard piston ring end gap:

4A–FE	**No.1**	**0.25 – 0.45 mm (0.0098 – 0.0177 in.)**
	No.2	**0.15 – 0.40 mm (0.0059 – 0.0118 in.)**
	Oil	**0.10 – 0.70 mm (0.0039 – 0.0276 in.)**
4A–GE	**No.1**	**0.25 – 0.47 mm (0.0098 – 0.0185 in.)**
	No.2	**0.20 – 0.42 mm (0.0079 – 0.0165 in.)**
	Oil	**0.15 – 0.52 mm (0.0059 – 0.0205 in.)**

Maximum piston ring end gap:

4A–FE	**No.1**	**1.05 mm (0.0413 in.)**
	No.2	**1.00 mm (0.0394 in.)**
	Oil	**1.30 mm (0.0512 in.)**
4A–GE	**No.1**	**1.07 mm (0.0421 in.)**
	No.2	**1.02 mm (0.0402 in.)**
	Oil	**1.12 mm (0.0441 in.)**

If the end gap is greater than maximum, replace the piston ring. If the end gap is greater than maximum, even with a new piston ring, rebore all the four cylinders or replace the cylinder block.



3. (4A–GE)

INSPECT PISTON PIN FIT

At 80°C (176°F) you should be able to push the piston pin into the piston pin hole with your thumb.

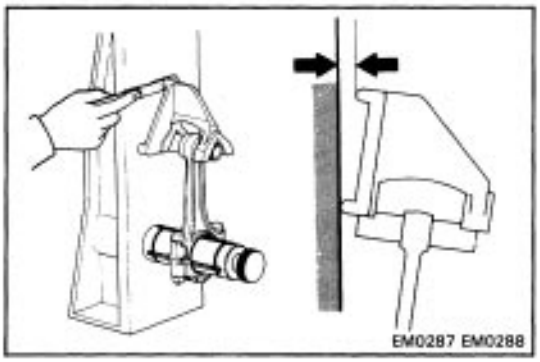

4. INSPECT CONNECTING ROD

(a) Using rod aligner and feeler gauge, check the connecting rod alignment.

- Check for bending.

Maximum bend:

4A–FE 0.05 mm (0.0020 in.) per 100 mm (3.94 in.)

4A–GE 0.03 mm (0.0012 in.) per 100 mm (3.94 in.)

If bend is greater than maximum, replace the connecting rod and connecting rod cap as a set.

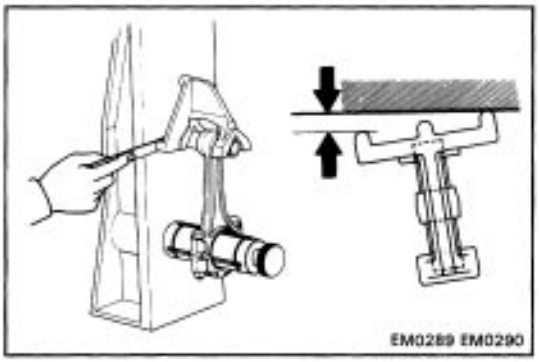

- Check for twist.

Maximum twist:

0.05 mm (0.0020 in.) per 100 mm (3.94 in.)

If twist is greater than maximum, replace the connecting rod and connecting rod cap as a set.

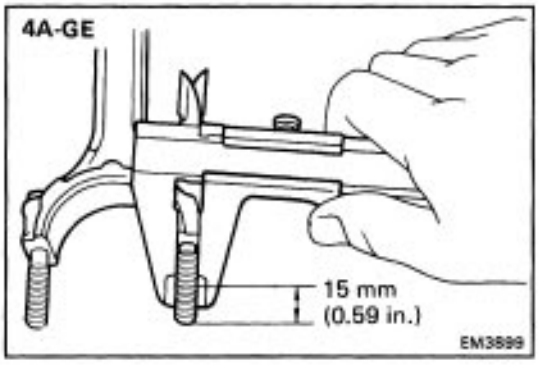

(4A–GE)

(b) Inspect connecting rod bolts.

- Fix a nut to each of the connecting rod bolts and check that the nut can be turned by hand to the end of the thread.
- If a nut cannot be moved all the way down the thread, measure the compressed thread outer diameter with a measuring gauge.
- If the location of this area cannot be judged by visual inspection, use the dimension locations in the illustration and measure the outer diameter.

Standard diameter: 8.860 – 9.000 mm (0.3488 – 0.3543 in.)

Minimum diameter: 8.600 mm (0.3386 in.)

If the diameter is not within specifications, replace the nut and connecting rod bolt.

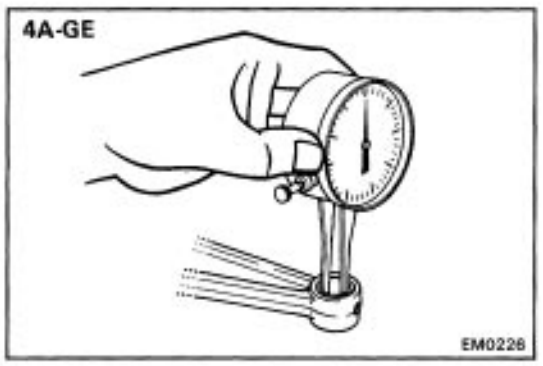

5. (4A–GE)

INSPECT PISTON PIN OIL CLEARANCE

(a) Using a caliper gauge, measure the inside diameter of the connecting rod bushing.

Bushing inside diameter: 20.012 – 20.022 mm (0.7879 – 0.7883 in.)

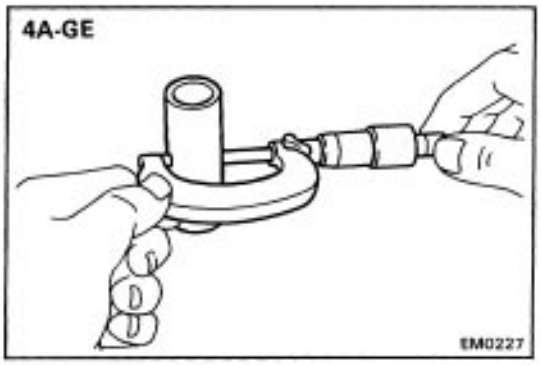

(b) Using a micrometer, measure the piston pin diameter.
Piston pin diameter: 20.006 – 20.016 mm
(0.7876 – 0.7880 in.)
(c) Subtract the piston pin diameter measurement from the bushing inside diameter measurement.
Standard oil clearance: 0.004 – 0.008 mm
(0.0002 – 0.0003 in.)
Maximum oil clearance: 0.05 mm (0.0020 in.)
If clearance is greater than maximum, replace the bushing. If necessary, replace the piston and piston pin assembly.

6. (4A–GE)

IF NECESSARY, REPLACE CONNECTING ROD BUSHINGS

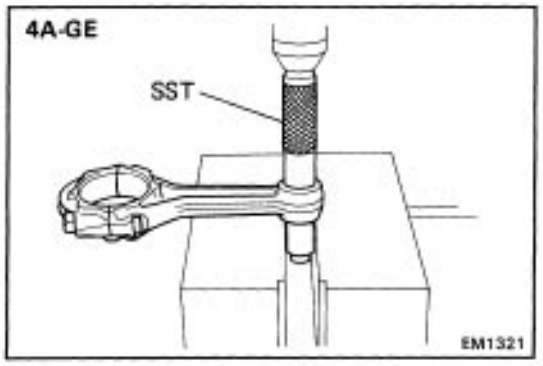

(a) Using SST and a press, push out the bushing.
SST 09222–30010

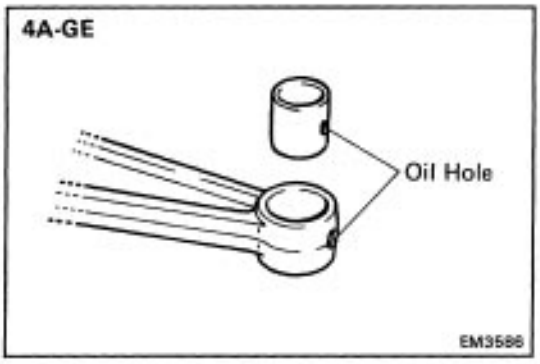

(b) Align the oil holes of the bushing and connecting rod.
(c) Using SST and a press, press in the bushing.
SST 09222–30010

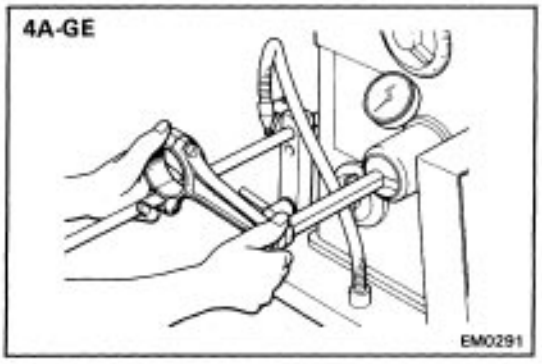

(d) Using a pin hole grinder, hone the bushing to obtain the standard specified clearance (See step 4) between the bushing and piston pin.

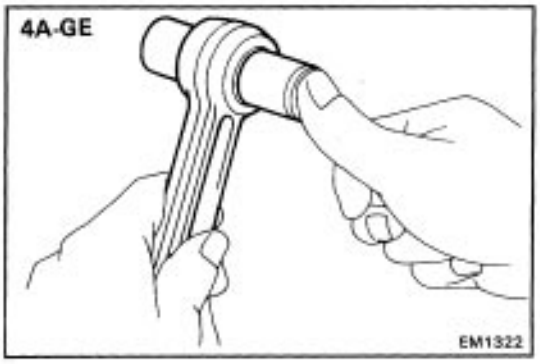

(e) Check the piston pin fit at normal room temperature. Coat the piston pin with engine oil and push it into the connecting rod with your thumb.

BORING OF CYLINDERS

HINT:

- Bore all four cylinders for the oversized piston outside diameter.
- Replace the piston rings with ones to match the oversized pistons.

1. KEEP OVERSIZED PISTON

Oversized piston diameter:

4A–FE	**O/S 0.50**	**81.43 – 81.46 mm (3.2059 – 3.2071 in.)**
4A–GE	**O/S 0.50**	**81.39 – 81.42 mm (3.2043 – 3.2055 in.)**

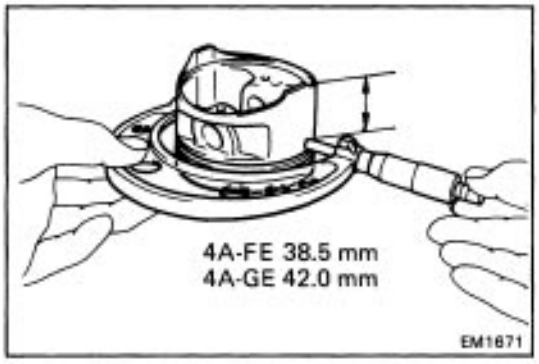

2. CALCULATE AMOUNT TO BORE CYLINDER

(a) Using a micrometer and with the piston upside down, measure the piston diameter at a right angles to the piston pin hole center line, the indicated distance from the skirt of the bottom edge.

4A–FE 38.5 mm (1.576 in.)
4A–GE 42.0 mm (1.654 in.)

(b) Calculate the amount each cylinder is to be rebored as follows:

Size to be rebored = P + C – H

P = Piston diameter

C = Piston clearance

4A–FE	**0.06 – 0.08 mm (0.0024 – 0.0031 in.)**
4A–GE	**0.10 – 0.12 mm (0.0039 – 0.0047 in.)**

H = Allowance for honing.

Less than 0.02 mm (0.0008 in.)

3. BORE AND HONE CYLINDERS TO CALCULATED DIMENSIONS

Amount of honing: 0.02 mm (0.0008 in.) maximum

NOTICE: Excess honing will destroy the finished roundness.

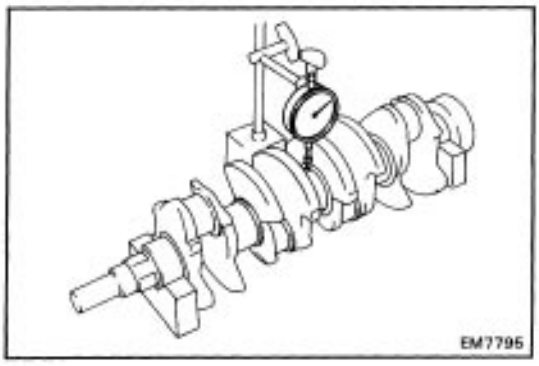

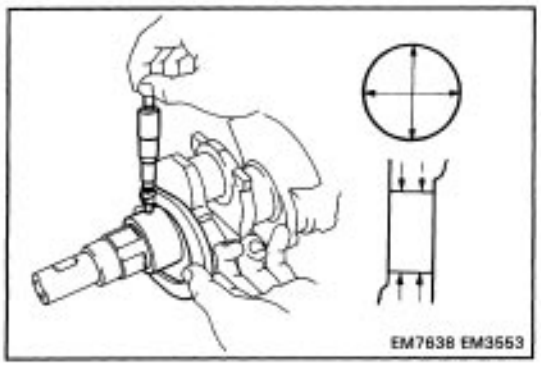

INSPECTION AND REPAIR OF CRANKSHAFT

1. INSPECT CRANKSHAFT FOR RUNOUT

(a) Place the crankshaft on V–blocks.

(b) Using a dial indicator, measure the circle runout at the center journal.

Maximum circle runout: 0.06 mm (0.0024 in.)

If the circle runout is greater than maximum, replace the crankshaft.

2. INSPECT MAIN JOURNALS AND CRANK PINS

(a) Using a micrometer, measure the diameter of each main journal and crank pin.

Main journal diameter:

STD	**47.982 – 48.000 mm**	
	(1.8891 – 1.8898 in.)	
U/S	**0.25 47.745 – 47.755 mm**	
	(1.8797 – 1.8881 in.)	

Crank pin diameter:

4A–FE	**STD**	**39.985 – 40.000 mm**
		(1.5742 – 1.5748 in.)
	U/S 0.25	**39.745 – 39.755 mm**
		(1.5648 – 1.5652 in.)
4A–GE	**STD**	**41.985 – 42.000 mm**
		(1.6529 – 1.6535 in.)
	U/S 0.25	**41.745 – 41.755 mm**
		(1.6435 – 1.6439 in.)

If the diameter is not as specified, check the oil clearance (See pages EM–132 to 136). If necessary, grind or replace the crankshaft.

(b) Check each main journal and crank pin for taper and out–of–round as shown.

Maximum taper and out–of–round: 0.02 mm (0.0008 in.)

If the taper and out–of–round is greater than maximum, replace the crankshaft.

3. IF NECESSARY, GRIND AND HONE MAIN JOURNALS AND/OR CRANKPINS

Grind and hone the main journals and/or crank pins to the finished undersized diameter.

(See procedure step 2 above).

Install new main journal and/or crank pin undersized bearings.

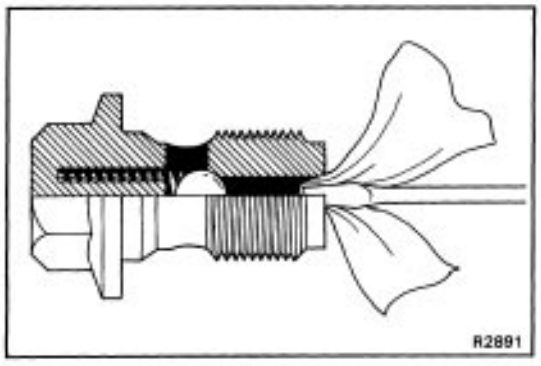

INSPECTION OF CHECK VALVES (4A–GE)

INSPECT CHECK VALVES

Push the valve with a screwdriver to check if it is stuck.

If stuck, replace the check valve.

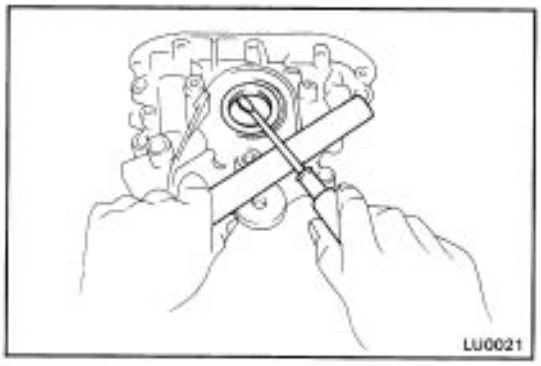

REPLACEMENT OF CRANKSHAFT OIL SEALS

HINT: There are two methods (A and B) to replace the oil seal which are as follows:

1. REPLACE CRANKSHAFT FRONT OIL SEAL

A. If oil pump is removed from cylinder block:

(a) Using a screwdriver, pry out the oil seal.

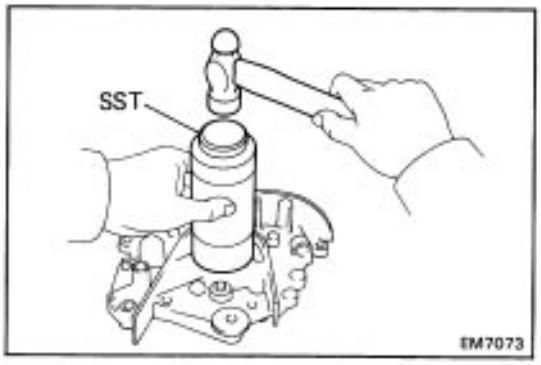

(b) Using SST and a hammer, tap in a new oil seal until its surface is flush with the oil pump case edge.

SST 09309–37010

(c) Apply MP grease to the oil seal lip.

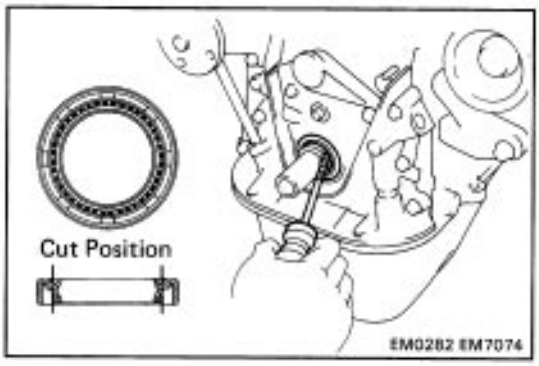

B. If oil pump is installed to the cylinder block:

(a) Using a knife, cut off the oil seal lip.

(b) Using a screwdriver, pry out the oil seal.

NOTICE: Be careful not to damage the crankshaft.

Tape the screwdriver tip.

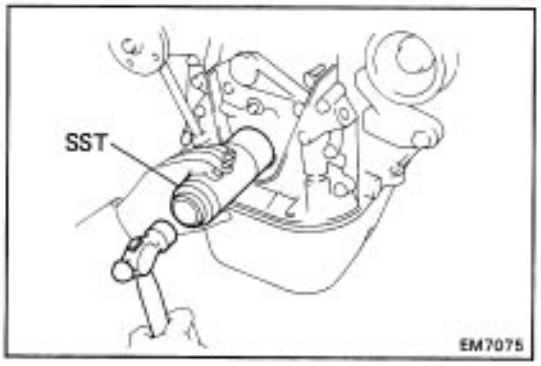

(c) Apply MP grease to a new oil seal lip.

(d) Using SST and a hammer, tap in the oil seal until its surface is flush with the oil pump case edge.

SST 09309–37010

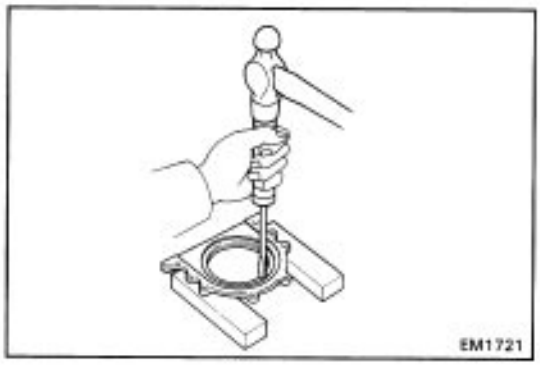

2. REPLACE CRANKSHAFT REAR OIL SEAL

A. If rear oil seal retainer is removed from cylinder block:

(a) Using screwdriver and hammer, tap out the oil seal.

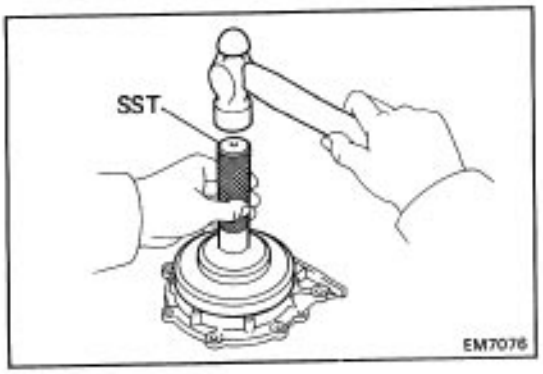

(b) Using SST and a hammer, tap in a new oil seal until its surface is flush with the rear oil seal edge.
SST 09223–41020
(c) Apply MP grease to the oil seal lip.

B. If rear oil seal retainer is installed to cylinder block:

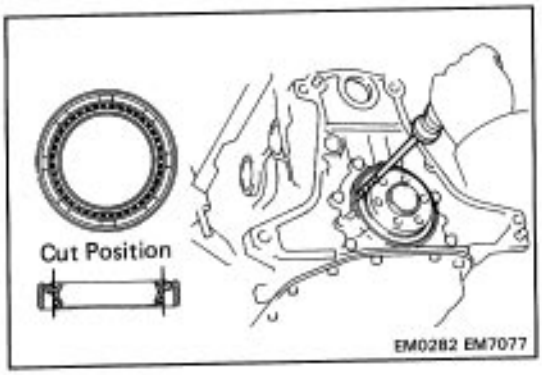

(a) Using a knife, cut off the oil seal lip.
(b) Using a screwdriver, pry out the oil seal.
NOTICE: Be careful not to damage the crankshaft. Tape the screwdriver tip.

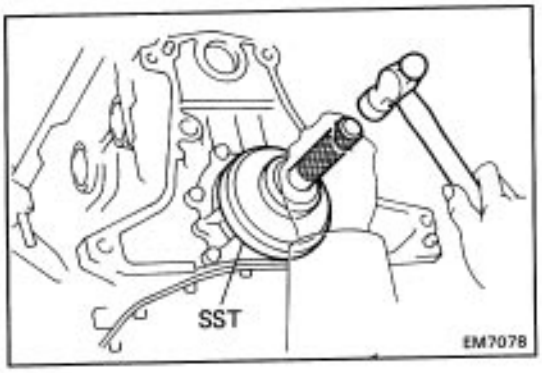

(c) Apply MP grease to a new oil seal lip.
(d) Using SST and a hammer, tap in the oil seal until its surface is flush with the rear oil seal retainer edge.
SST 09223–41020

REPLACEMENT OF UNION (4A–GE)

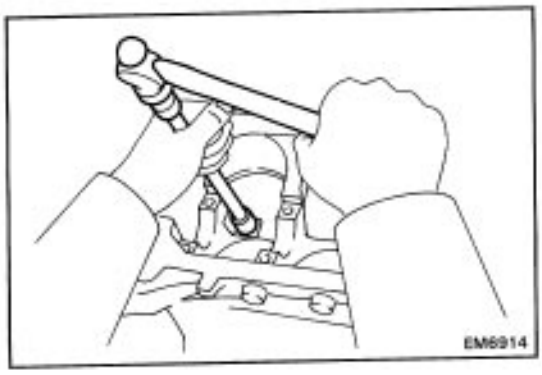

1. REMOVE UNION

Using a 12mm socket wrench and a hammer, tap out the union.

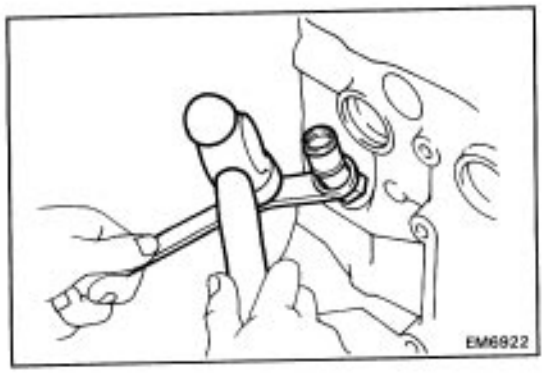

2. INSTALL UNION

Using an offset wrench and a hammer, tap in new union

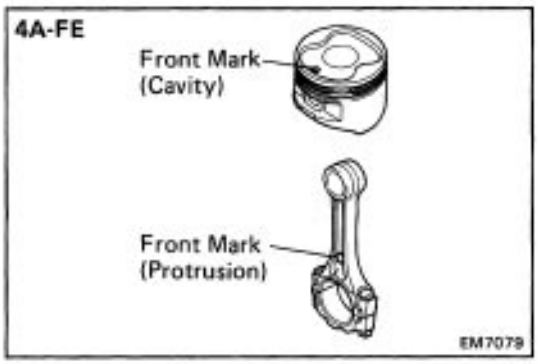

ASSEMBLY OF PISTON AND CONNECTING ROD

(See page EM–117)

1. ASSEMBLE PISTON AND CONNECTING ROD

(a) Align the front marks of the piston and connecting rod.

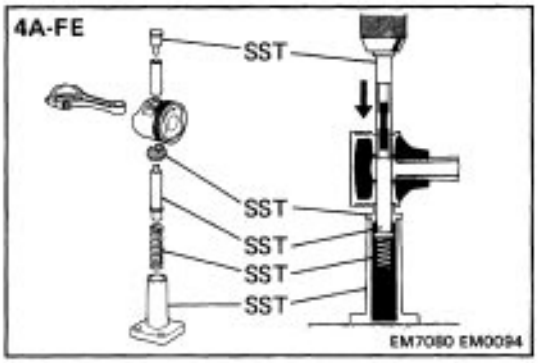

(b) Coat the piston pin and piston hole of the piston with engine oil.

(c) Using SST, press in the piston pin.

SST 09221–25024 (09221–00020, 09221–00030, 09221–00050, 09221–00130, 09221–00140)

(d) Check that the piston smoothly moves back and forth on the piston pin.

(e) Check that the connecting rod and piston pin are positioned in the middle of the piston.

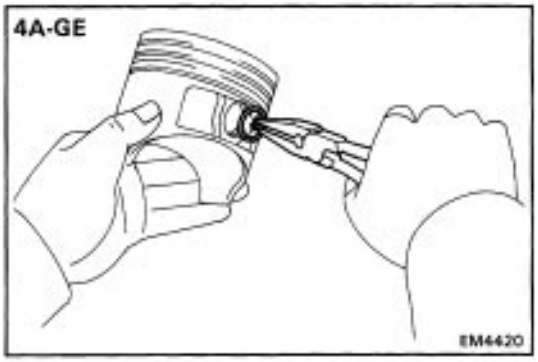

(4A–GE)

(a) Install a new snap ring one side of the piston pin hole.

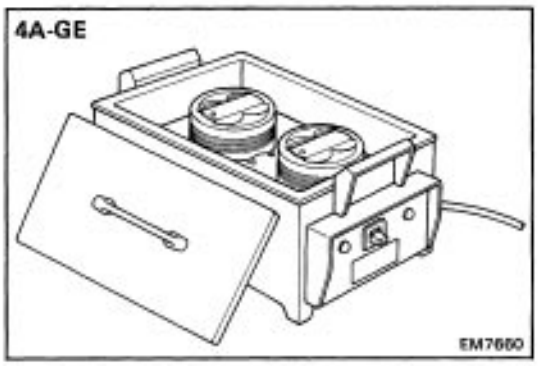

(b) Gradually heat the piston to 70 – 80°C (158 – 176°F)

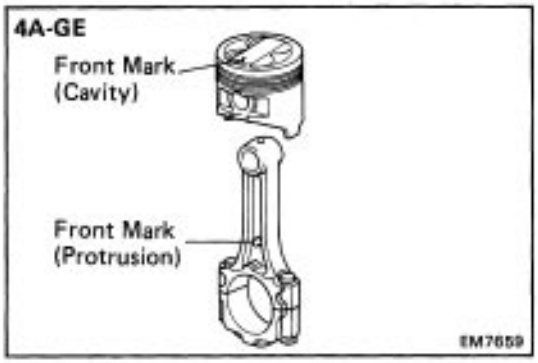

(c) Coat the piston pin with engine oil.

(d) Align the front marks of the piston and connecting rod, and push in the piston pin with your thumb.

(e) Install a new snap ring on the other side of the piston pin hole.

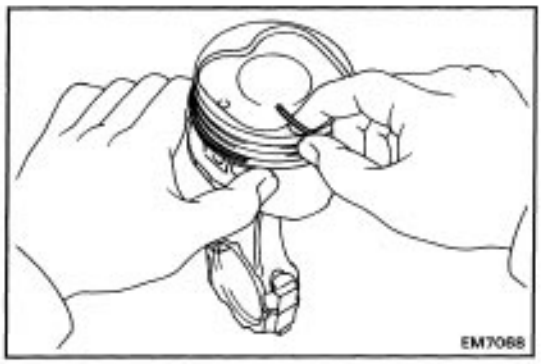

2. INSTALL PISTON RINGS

(a) Install the oil ring expander and two side rails by hand.

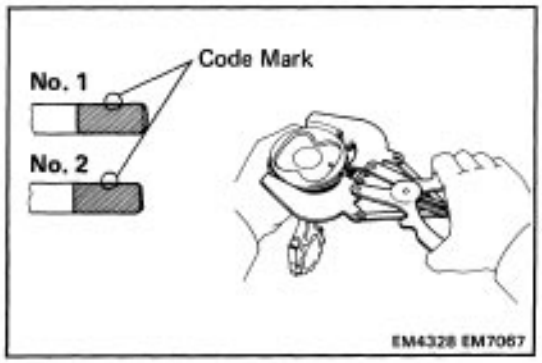

(b) Using a piston ring expander, install the two compression rings with the code mark facing upward.

Code mark: No.1 R or T (4A–GE only)
No.2 R or T

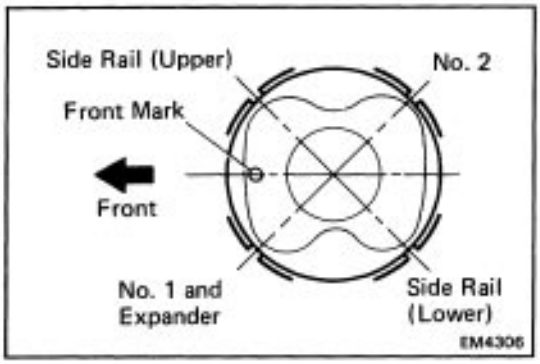

(c) Position the piston rings so that the ring end gaps are as shown.

NOTICE: Do not align the end gaps.

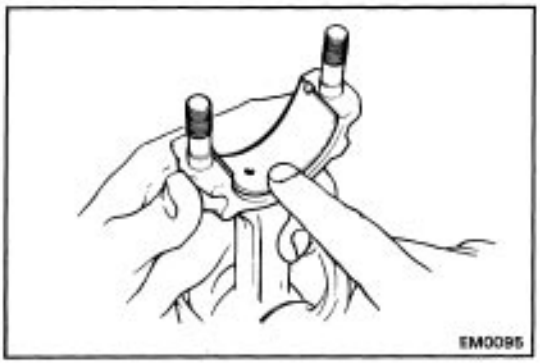

3. INSTALL CONNECTING ROD BEARINGS

(a) Align the bearing claw with the groove of the connecting rod or connecting rod cap.

(b) Install the bearings in the connecting rod and connecting rod cap.

NOTICE: Install the bearing with the oil hole in the connecting rod.

ASSEMBLY OF CYLINDER BLOCK

(See page EM–117)

HINT:

- Thoroughly clean all parts to be assembled.
- Before installing the parts, apply new engine oil to all sliding and rotating surfaces.
- Replace all gaskets, 0–rings and oil seals with new parts.

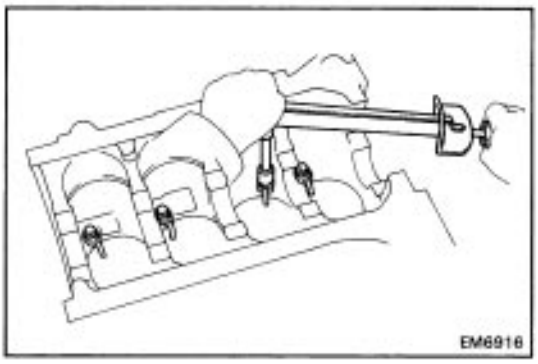

1. (4A–GE)

INSTALL OIL NOZZLE AND CHECK VALVES

Install the nozzle with the bolt. Install the four oil nozzles. Torque the bolts.

Torque: 250 kg–cm (18 ft–lb, 25 N–m)

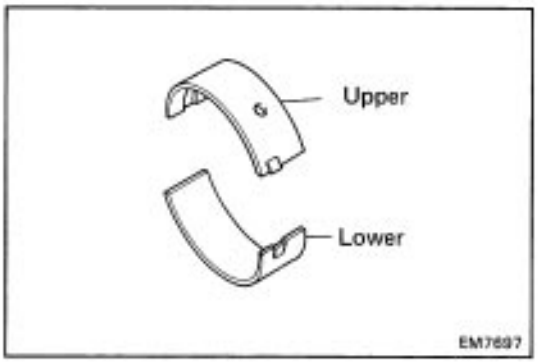

2. INSTALL MAIN BEARINGS

HINT: Upper bearings have an oil groove and oil holes; lower bearings do not.

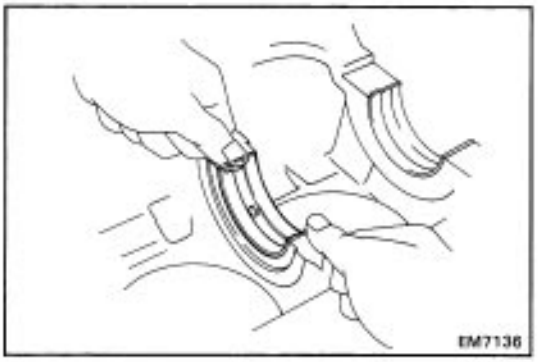

(a) Align the bearing claw with the claw groove of the main bearing cap or cylinder block.

(b) Install the bearings in the cylinder block and main bearing caps.

NOTICE: Install the bearing with the oil hole in the cylinder block.

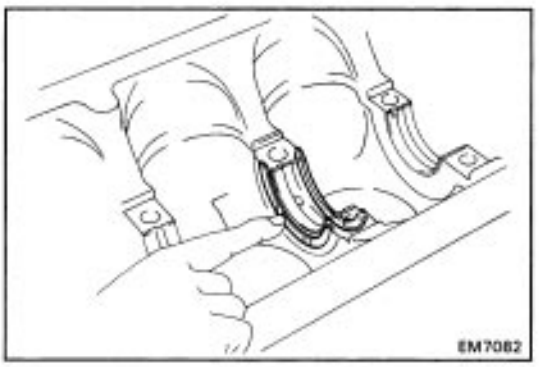

3. INSTALL UPPER THRUST WASHERS

Install the thrust washers under the No. 3 main bearing cap position of the block with the oil grooves facing outward.

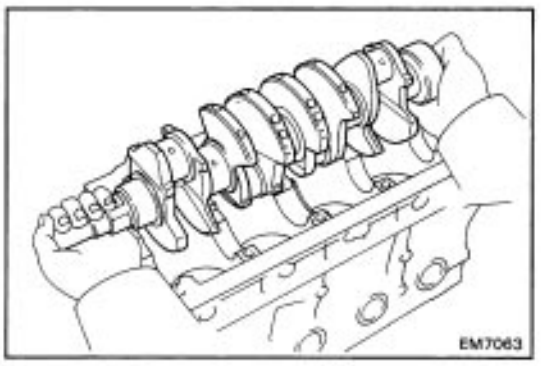

4. PLACE CRANKSHAFT ON CYLINDER BLOCK

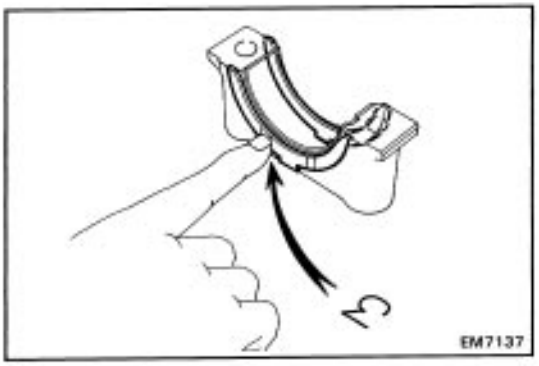

5. INSTALL MAIN BEARING CAPS AND LOWER THRUST WASHERS

(a) Install the thrust washers on the No.3 bearing cap with the grooves facing outward.

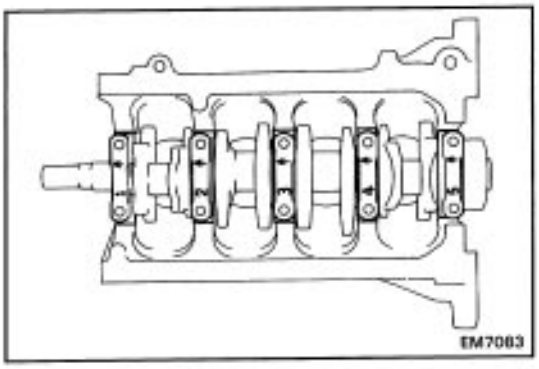

(b) Install the five main bearing caps in their proper locations.

HINT: Each bearing cap has a number and front mark.

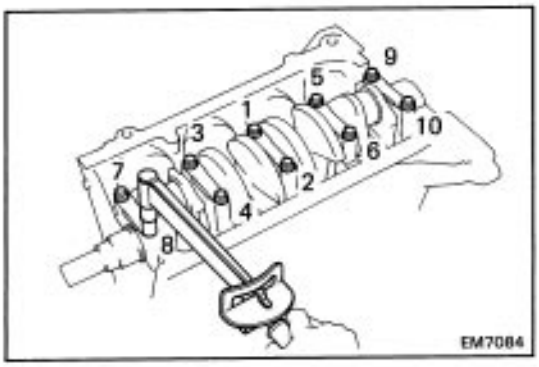

(c) Apply a light coat of engine oil on the threads and under the heads of the main bearing caps.

(d) Install and uniformly tighten the ten bolts of the main bearing caps in several passes, in the sequence shown.

Torque: 610 kg–cm (44 ft–lb, 60 N–m)

(e) Check that the crankshaft turns smoothly.

(f) Check the crankshaft thrust clearance.

(See step 5 on page EM–134)

6. INSTALL PISTON AND CONNECTING ROD ASSEMBLIES

(a) Cover the connecting rod bolts with a short piece of hose to protect the crankshaft from damage.

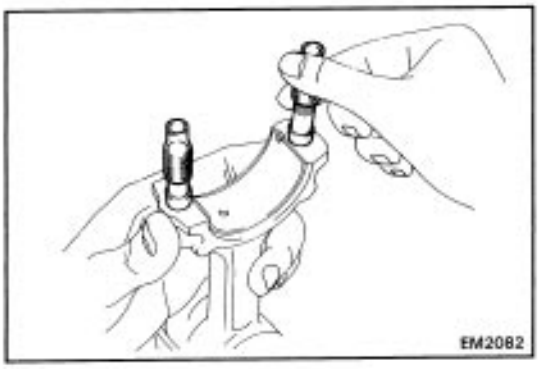

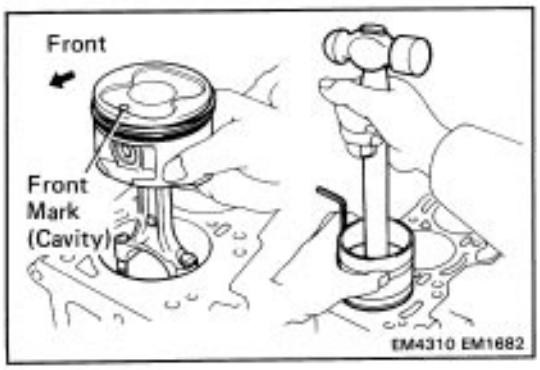

(b) Using a piston ring compressor, push the correctly numbered piston and connecting rod assemblies into each cylinder with the front mark of the piston facing forward.

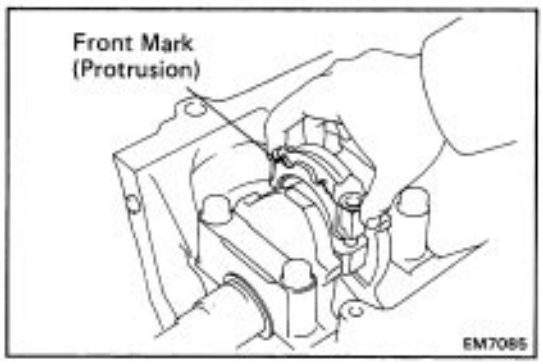

7. INSTALL CONNECTING ROD CAPS

(a) Match the numbered connecting rod cap with the connecting rod.

(b) Install the connecting rod cap with front mark facing forward.

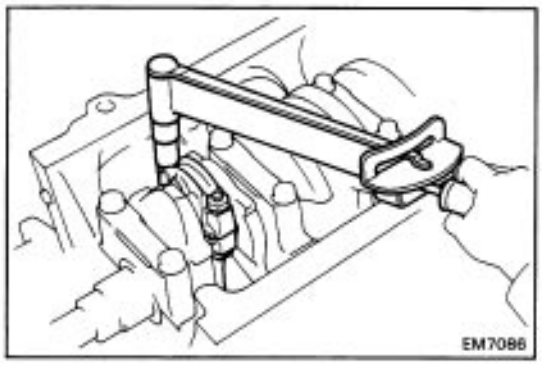

(4A–FE)

(c) Apply a light coat of engine oil on the threads and under the cap nuts.

(d) Install and alternately tighten the connecting rod cap nuts in several passes.

Torque: 500 kg–cm (36 ft–lb, 49 N–m)

(e) Check that the crankshaft turns smoothly.

(f) Check the connecting rod thrust clearance.

(See step 2 on page EM–1 32)

(4A–GE)

HINT:

- The connecting rod cap nuts are tightened in two progressive steps.
- If any of the cap bolts break or deform, replace them.

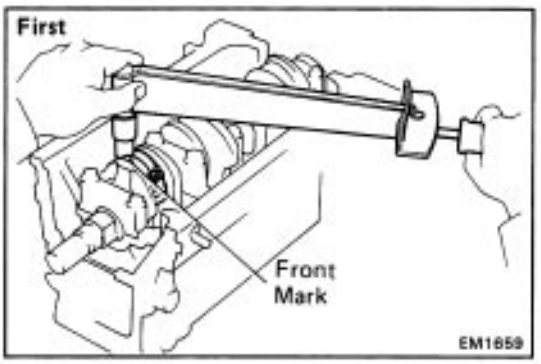

(c) Apply a light coat of engine oil on the threads and under the nuts of the connecting rod cap.

(d) First, alternately tighten the cap nuts in several passes.

Torque: 400 kg–cm (29 ft–lb, 39 N–m)

If any one of the nuts does not meet the torque specification, replace the bolt.

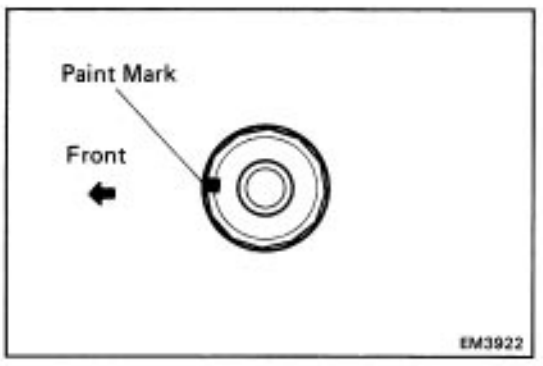

(e) Mark the front side of the top of cap nut with paint.

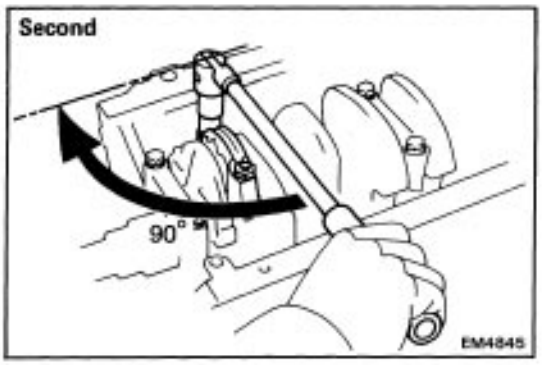

(f) Second, alternately retighten the cap nuts by an additional 90°.
(g) Check that the paint mark is turned by 90°.
(h) Check that the crackshaft turns smoothly.
(i) Check the connecting rod thrust clearance.
(See step 2 on page EM–132)

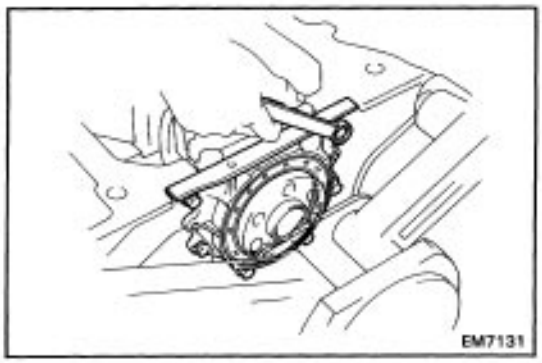

8. INSTALL REAR OIL SEAL RETAINER

Install a new gasket and the retainer with the six bolts.
Torque: 95 kg–cm (82 in.–lb, 9.3 N–m)

ASSEMBLY OF ENGINE(4A–FE)

1. INSTALL OIL PRESSURE SWITCH

2. INSTALL OIL FILTER

(See page LU–7)

3. INSTALL OIL PUMP, OIL STRAINER AND OIL PAN

(See page LU–9)

4. INSTALL WATER PUMP

(See page CO–6)

5. INSTALL CYLINDER HEAD

(See page EM–54)

6. INSTALL TIMING PULLEY AND TIMING BELT

(See page EM–30)

7. INSTALL BRACKET AND ALTERNATOR

Torque (Bracket): 500 kg–cm (36 ft–lb, 49 N–m)

8. (with A/C)

INSTALL A/C COMPRESSOR MOUNT

Torque: 480 kg–cm (35 ft–lb, 47 N–m)

9. (w/ PS)

INSTALL PS PUMP BRACKET

Torque: 400 kg–cm (29 ft–lb, 39 N–m)

10. REMOVE ENGINE ASSEMBLY FROM ENGINE STAND

11. INSTALL REAR END PLATE

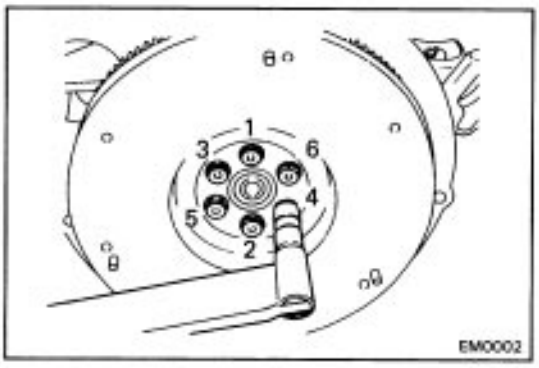

12. INSTALL FLYWHEEL (M/T) OR DRIVE PLATE (A/T)

Install the flywheel or drive plate on the crankshaft. Tighten the bolts to the specified torque in two or three passes in the sequence shown.

Torque:

Flywheel	**800 kg–cm**	**(58 ft–lb, 78 N–m)**
Drive plate	**650 kg–cm**	**(47 ft–lb, 64 N–m)**

13. (M/T)

INSTALL CLUTCH DISC AND COVER

HINT: If necessary, inspect the clutch unit before installation.

ASSEMBLY OF ENGINE (4A–GE)

1. INSTALL STIFFENER PLATE ADAPTER

Torque: 400 kg–cm (29 ft–lb, 39 N–m)

2. INSTALL KNOCK SENSOR

3. INSTALL OIL PRESSURE SENDER GAUGE

(See page LU–5)

4. INSTALL OIL FILTER BRACKET

(See page LU–7)

5. INSTALL OIL PUMP, BAFFLE PLATE, STRAINER AND OIL PUMP

(See page LU–9)

6. INSTALL WATER PUMP

(See page CO–6)

7. INSTALL CYLINDER HEAD

(See page EM–89)

8. INSTALL BRACKET AND ALTERNATOR

Torque (Bracket): 500 kg–cm (36 ft–lb, 49 N–m)

9. INSTALL TIMING PULLEYS AND TIMING BELT

(See page EM–41)

10. INSTALL UNION PIPES AND OIL COOLER HOSES

Torque: 250 kg–cm (18 ft–lb, 25 N–m)

11. REMOVE ENGINE ASSEMBLY FROM ENGINE STAND

12. INSTALL REAR END PLATE

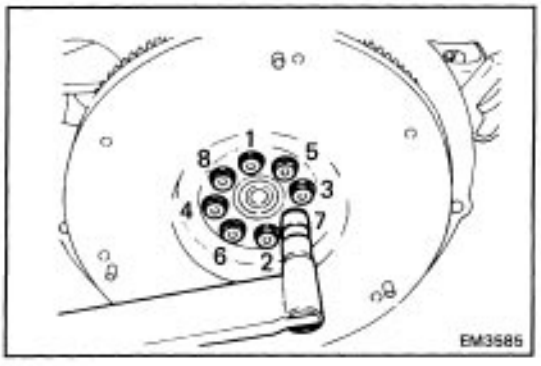

13. INSTALL FLYWHEEL

Install the flywheel or drive plate on the crankshaft. Tighten the bolts to the specified torque in two or three passes in the sequence shown.

Torque: 750 kg–cm (54 ft–lb, 74 N–m)

14. INSTALL CLUTCH DISC AND COVER

HINT: If necessary, inspect the clutch unit before installation.

INSTALLATION OF ENGINE (4A–FE)

1. INSTALL TRANSAXLE TO ENGINE

2. INSTALL STARTER (See page ST–14)

3. (A/T)

INSTALL SIX TORQUE CONVERTER MOUNTING BOLTS

4. INSTALL HOLE PLUG TO REAR END PLATE

5. CONNECT FOLLOWING CONNECTORS:

- Back–up lamp switch (M/T)
- Neutral start switch (A/T)

6. INSTALL ENGINE WITH TRANSAXLE TO VEHICLE

(a) Attach the engine hoist chain to the lifting bracket on the engine.

HINT: Hang the engine wires and hoses on the chain.

(b) Lower the engine into the engine compartment.

- Tilt the transaxle downward, lower the engine and clear the left mounting.

NOTICE: Be careful not to hit the power steering gear housing and throttle position sensor.

(c) Keep the engine level, and align each mounting with the bracket.

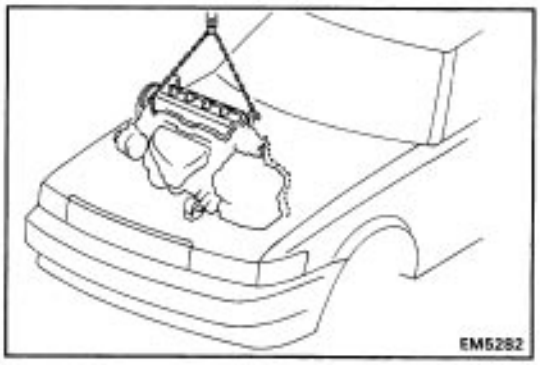

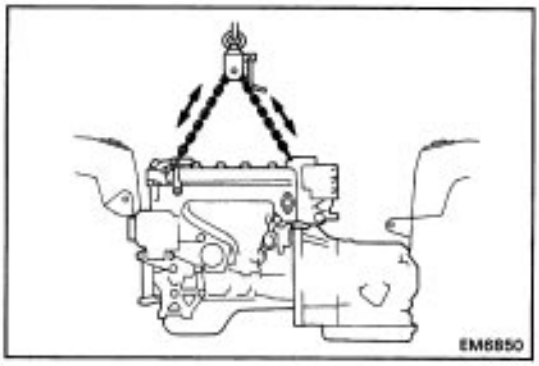

(d) Install the RH mounting insulator to the engine mounting bracket with the two nuts and bolt.

Torque: Bolt 650 kg–cm (47 ft–lb, 64 N–m)
Nut 530 kg–cm (38 ft–lb, 52 N–m)

(e) Align the RH mounting insulator with the body bracket and temporarily install the mounting through bolt and nut.

Torque: 890 kg–cm (64 ft–lb, 87 N–m)

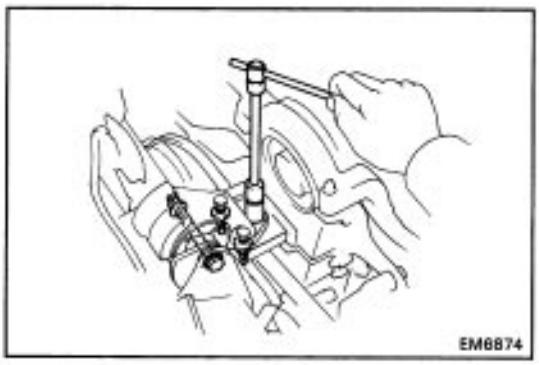

(f) Align the LH mounting insulator bracket with the transaxle case bracket. Temporarily install the three bracket bolts.

Torque: 490 kg–cm (35 ft–lb, 48 N–m)

(g) Repeat and tighten bolt from (d) to (f).

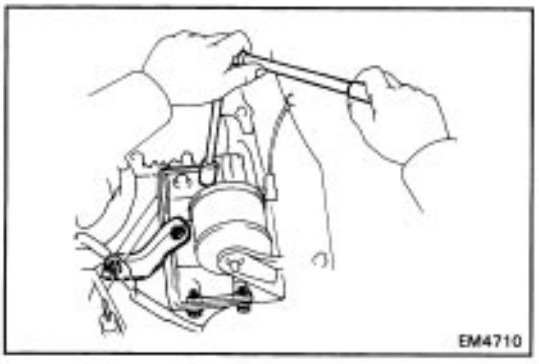

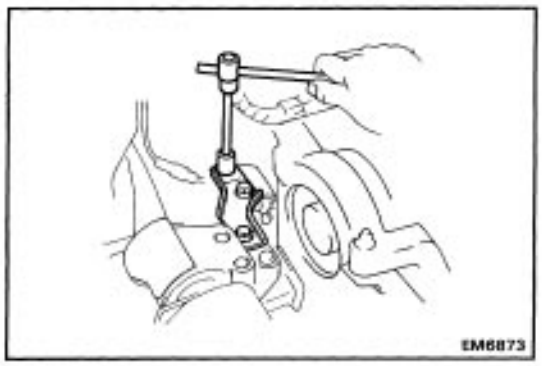

(h) Install the RH mounting stay with the three bolts.
Torque: 430 kg–cm (31 ft–lb, 42 N–m)
(i) Install the LH mounting stay with the two bolts.
Torque: 210 kg–cm (15 ft–lb, 21 N–m)
(j) Remove the hoist chain from the engine.

7. RAISE VEHICLE

NOTICE: Be sure the vehicle is securely supported.

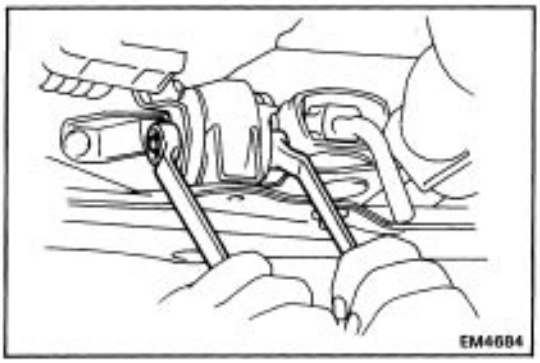

8. INSTALL ENGINE MOUNTING CENTER MEMBER

(a) Install and torque the rear mounting bolt.
Torque: 890 kg–cm (^4 ft–lb, 87 N–m)

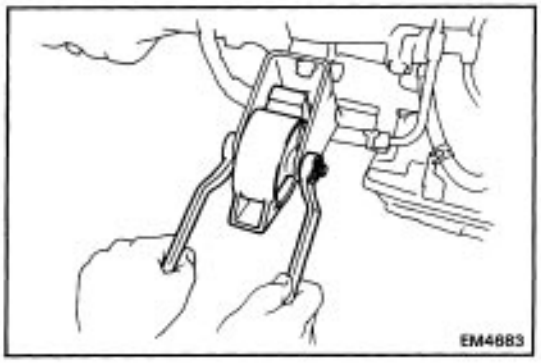

(b) Install and torque the front mounting bolt.
Torque: 890 kg–cm (64 ft–lb, 87 N–m)

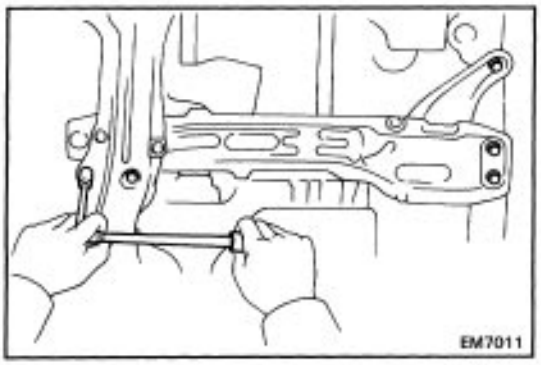

(c) Install the engine mounting member with the five bolts. Torque the bolts.
Torque: 620 kg–cm (45 ft–lb, 61 N – m)

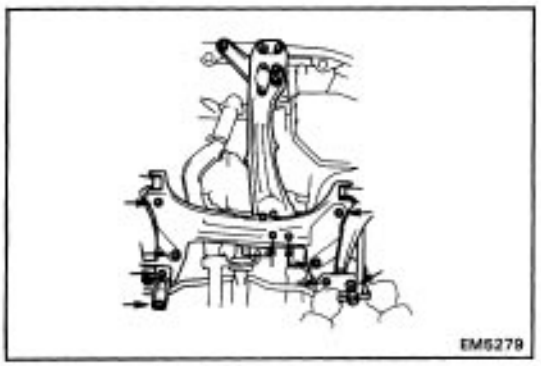

9. (4WD)

INSTALL FRONT SUSPENSION CROSSMEMBER

Install the suspension crossmember with the eight bolts.
Torque: 2,100 kg–cm (152 ft–lb, 206 N–m)
(Front lower arm bolt)
1,300 kg–cm (94 ft–lb, 127 N – m)
(Rear bolt)

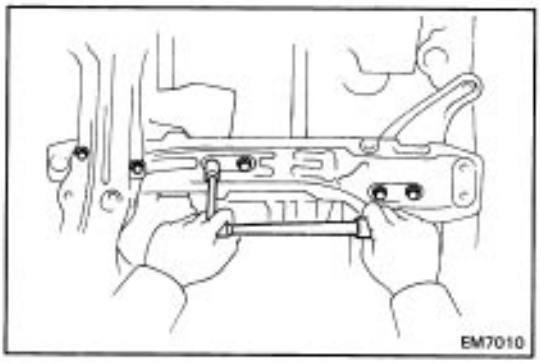

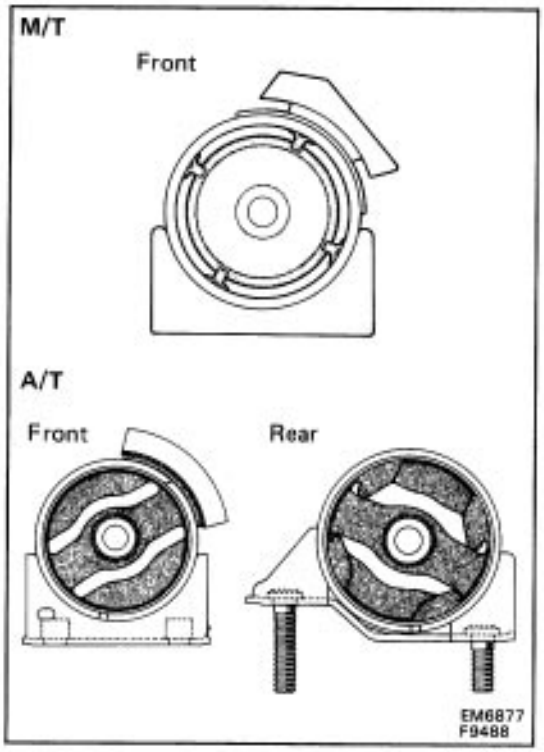

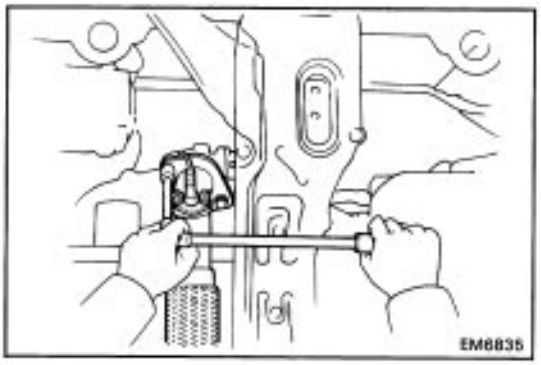

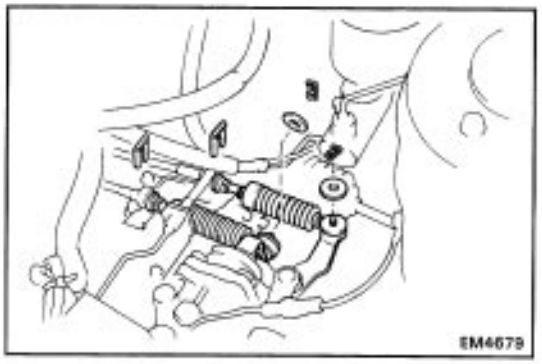

10. INSTALL FRONT, CENTER (2WD) AND REAR MOUNTING ONTO MEMBER

(a) Temporarily install the front and rear mounting and bolts.

(b) Align each bolt hole at the brackets with the member. Install and torque the bolts and nuts.

Torque:	**Front**	**490 kg–cm (35 ft–lb, 48 N–m)**
	Center (2WD)	**530 kg–cm (38 ft–lb, 52 N–m)**
	Rear (2WD)	**530 kg–cm (38 ft–lb, 52 N–m)**
	Rear (4WD)	**580 kg–cm (42 ft–lb, 57 N–m)**

(c) Install the two hole covers.

(d) Shake the engine several times to make sure that there is no load on the front and rear (A/T only) mounting insulators.

NOTICE:

- **On M/T, check that the insulator space is equal all the way around.**
- **On A/T, check that the space above and below the insulator is equal.**

HINT:

- On new insulators, the lower space is wider than the upper space.
- On M/T, it does not matter if the insulator ribs (4 places) are broken.

11. (4WD)

CONNECT PROPELLER SHAFT

12. CONNECT DRIVE SHAFTS TO TRANSAXLE

13. INSTALL FRONT EXHAUST PIPE

(a) Install both sets of a new gaskets and the front pipe.

(b) Connect the exhaust pipe to the manifold. Install and torque two new nuts.

Torque: 630 kg–cm (46 ft–lb, 62 N–m)

(c) Install the two bolts to the catalytic coverter and bracket.

(d) Connect the oxygen sensor connector.

14. (4WD)

CONNECT OIL COOLER HOSES

15. LOWER VEHICLE

16. CONNECT CONTROL CABLES

(a) Connect the control cables to the shift outer lever and select lever.

(b) Install the retainers, washers and clips.

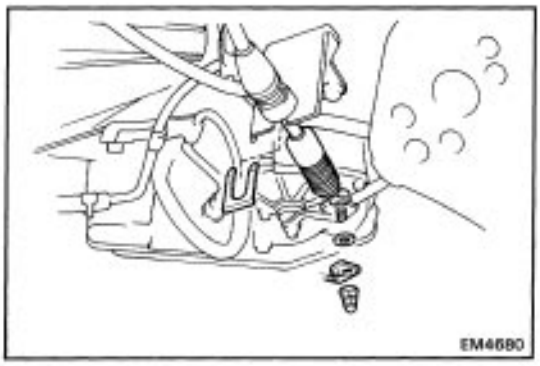

17. (A/T)

CONNECT CONTROL CABLE

(a) Connect the control cable to the shift lever.

(b) Install the retainer and clip.

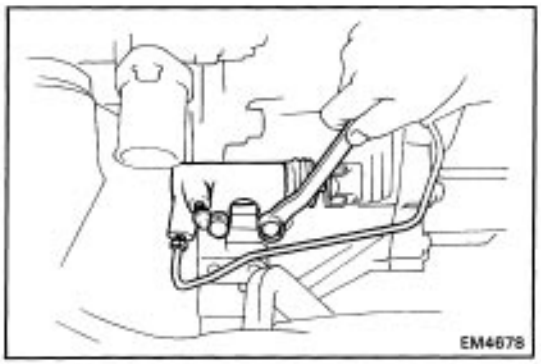

18. (M/T)

INSTALL CLUTCH RELEASE CYLINDER

(a) Install the release cylinder with the two bolts.

(b) Connect the bracket to the transaxle.

(c) Install the clip to the clutch pipe bracket.

19. CONNECT SPEEDOMETER CABLE TO TRANSAXLE

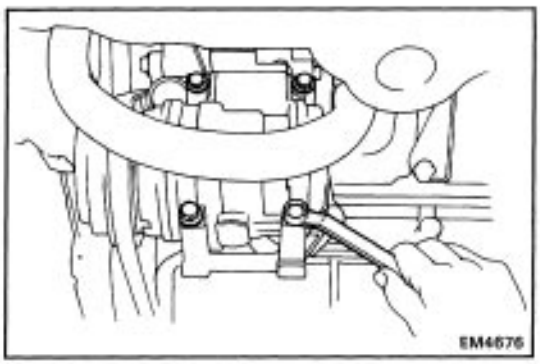

20. (with A/C)

INSTALL A/C COMPRESSOR

Install the four compressor mounting bolts.

Torque: 250 kg–cm (18 ft–lb, 25 N–m)

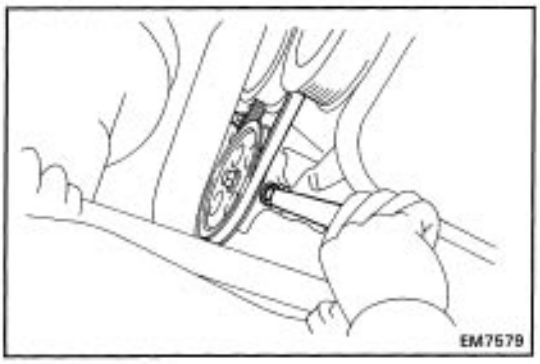

21. (w/ PS)

INSTALL PS PUMP

(a) Connect the PS pump with pivot bolt and adjusting bolts.

(b) Install the drive belt.

Torque the bolts.

Torque: 400 kg–cm (29 ft–lb, 39 N–m)

22. ADJUST DRIVE BELT (See step 18 on page EM–40)

23. CONNECT FUEL RETURN HOSE TO AIR PIPE

24. CONNECT INLET HOSE TO FUEL FILTER

Torque: 300 kg–cm (22 ft–lb, 29 N–m)

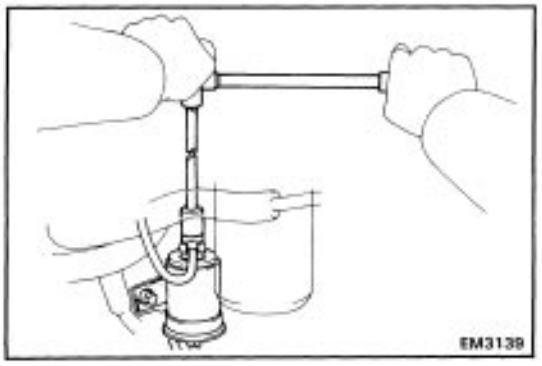

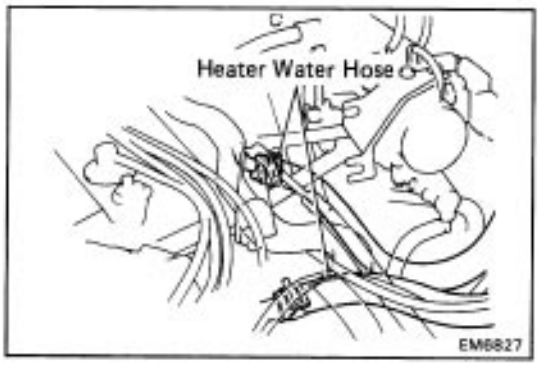

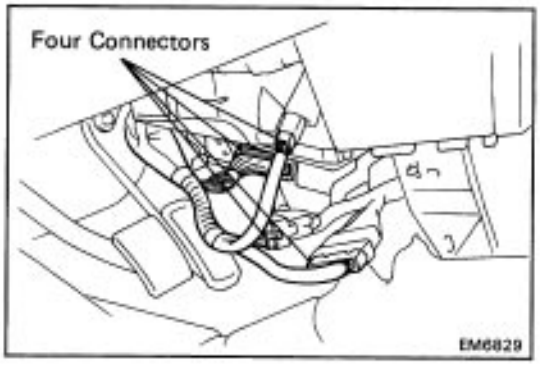

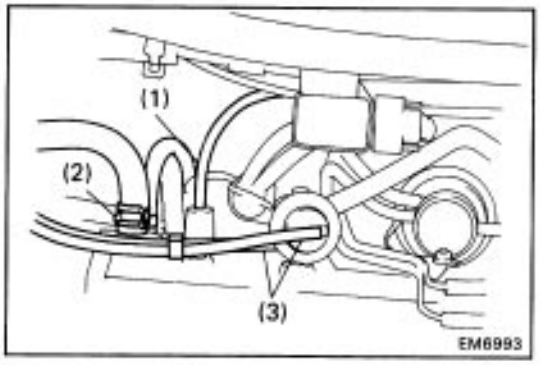

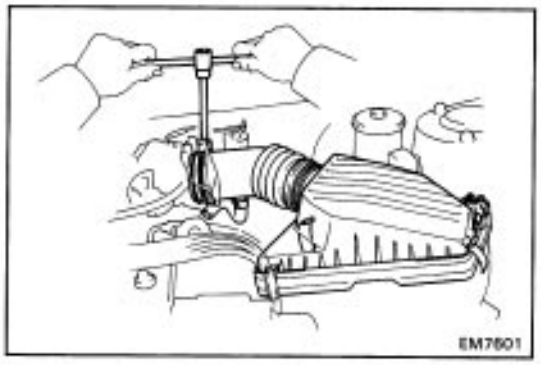

25. CONNECT HEATER WATER HOSES

(a) Connect the heater hose to the water inlet pipe.

(b) Connect the heater hose to the water inlet housing.

26. CONNECT ENGINE WIRE

(a) Push in the engine wire through the cowl panel.

(b) Connect the four connectors to the cowl wire and ECU.

(c) Install the center cover in front of the console box.

(d) Install rear and front console boxes.

(e) Connect the following connectors:

- Ground strap connector and bolt
- Check connector
- Vacuum sensor connector
- A/C wire connector

(f) Install the No. 2 junction block and No. 5 relay block with the three nuts.

27. CONNECT FOLLOWING HOSE:

(a) Connect the fuel return hose to the air pipe.

(b) (wl PS and/or with A/C)

Connect the air hoses to the air pipe.

(c) Connect the following vacuum hoses to the intake chamber:

(1) Vacuum sensor hose to gas filter

(2) Brake booster vacuum hose

(3) (with A/C)

Two A/C vacuum hoses to actuator

28. INSTALL WASHER TANK

29. INSTALL AIR CLEANER ASSEMBLY

(a) Install the air cleaner support bracket with the two bolts.

(b) Install the air cleaner case with the three bolts.

(c) Connect the harness clamp to the boss of the case.

(d) Install the air cleaner filter element.

(e) Connect the air cleaner hose, and install the air cleaner cap with the four clips.

(f) Tighten the air cleaner hose clamp bolt.

(g) Connect the air hose to the air pipe.

(h) Connect the air intake temp. sensor connector to the air cleaner cap.

(i) Connect the vacuum hose to the charcoal canister.

30. (w/ CRUISE CONTROL)

INSTALL CRUISE CONTROL ACTUATOR

31. (A/T)

CONNECT THROTTLE CABLE TO BRACKET

32. CONNECT ACCELERATOR WIRE TO BRACKET

33. INSTALL RADIATOR WITH COOLING FAN
(See page CO–19)

34. (M/T)
REFILL MANUAL TRANSAXLE AND DIFFERENTIAL WITH GEAR OIL
2WD (See page MA–9)
4WD (See page MA–10)

35. (A/T)
REFILL AUTOMATIC TRANSAXLE AND TRANSAXLE
2WD (See page MA–10)
4WD (See page MA–11)

36. REFILL WITH COOLANT
Close the radiator and engine drain cock and fill with coolant.
Total capacity (wl heater):
M/T (Ex AE92L – ACMXKK)
5.6 liters (5.9 US qts, 4.9 Imp. qts)
M/T (AE92L – ACMXKK)
6.2 liters (6.2 US qts, 5.5 Imp. qts)
A/T 6.1 liters (6.4 US qts, 5.4 Imp. qts)

37. REFILL WITH ENGINE OIL
Fill the engine with new oil API grade SG multigrade, fuel efficient and recommended viscosity oil.
Capacity: Dry fill 3.7 liters (3.9 US qts, 3.3 Imp. qts)
Drain and refill (w/o oil filter change)
3.0 liters (3.2 US qts, 2.6 Imp. qts)
Drain and refill (wl oil filter change)
3.2 liters (3.4 US qts, 2.8 Imp. qts)

38. INSTALL BATTERY

39. START ENGINE AND CHECK FOR LEAKS
Warm up engine and inspect leakage.

40. RECHECK COOLANT AND ENGINE OIL LEVEL

41. INSTALL RH AND LH ENGINE UNDER COVER

42. INSTALL HOOD

INSTALLATION OF ENGINE (4A–GE)

1. INSTALL TRANSAXLE TO ENGINE

2. INSTALL STARTER (See page ST–14)

3. INSTALL FLYWHEEL HOUSING UNDER COVER

4. CONNECT FOLLOWING CONNECTORS:

(a) Back–up light switch

(b) Water temperature sensor

5. INSTALL WATER INLET HOUSING

(a) Connect the two hoses to the No. 1 and No. 2 water by–pass pipes.

(b) Install the water inlet housing with mounting bolts and nut.

(c) Connect the vacuum hoses to BVSV.

(d) Connect the radiator fan temperature switch connector and start injector time switch connector.

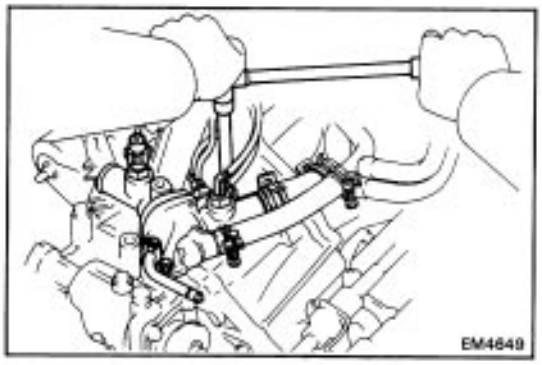

6. INSTALL ENGINE WITH TRANSAXLE TO VEHICLE

(a) Attach the engine hoist chain to the lifting bracket on the engine.

HINT: Hang the engine wires and hoses on the chain.

(b) Lower the engine into the engine compartment.

- Tilt the transaxle downward, lower the engine and clear the left mounting.

NOTICE: Be careful not to hit to the power steering gear housing and throttle position sensor.

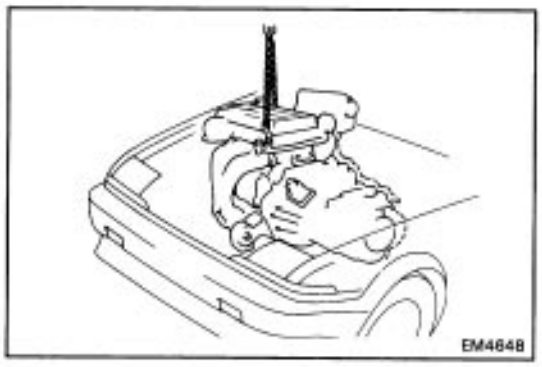

(c) Keep the engine level, and align each mounting with the bracket.

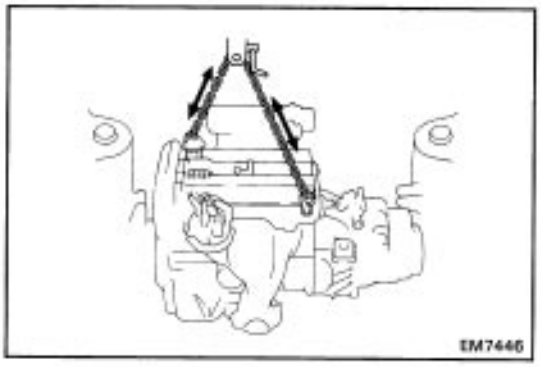

(d) Install the RH mounting insulator to the engine mounting bracket with the two nuts.

Torque: 530 kg–cm (38 ft–lb, 52 N–m)

(e) Align the RH mounting insulator with the body bracket and temporarily install the mounting through bolt and nut.

Torque: 890 kg–cm (64 ft–lb, 87 N–m)

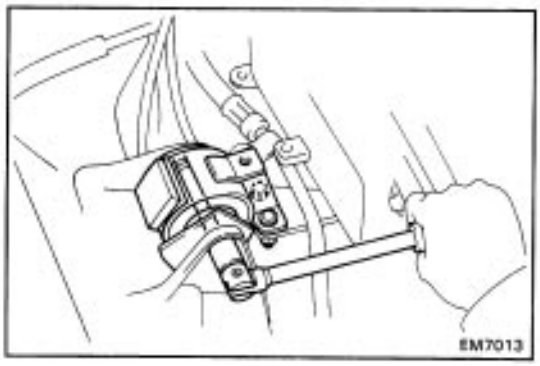

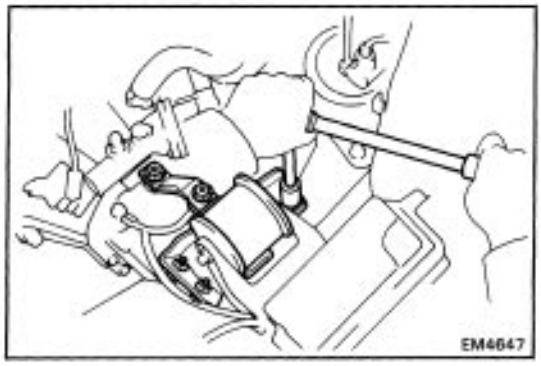

(f) Align the LH mounting insulator bracket with the transaxle case bracket. Temporarily install the three bracket bolts.

Torque: 490 kg–cm (35 ft–lb, 48 N–m)

(g) Repeat and tighten bolt from (d) to (f).

(h) Install the LH mounting stay with two bolts.

Torque: 210 kg–cm (15 ft–lb, 21 N–m)

(i) Remove the hoist chain from the engine.

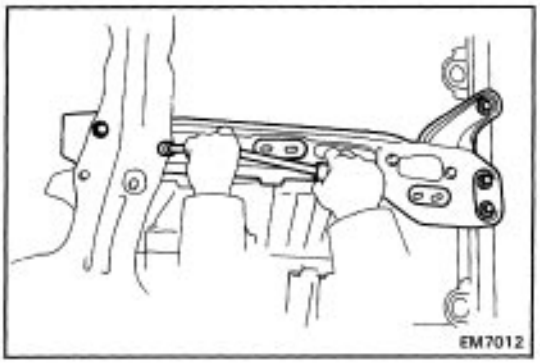

7. RAISE VEHICLE

NOTICE: Be sure the vehicle is securely supported.

8. INSTALL ENGINE MOUNTING CENTER MEMBER

Install the engine mounting center member with five bolts. Torque the bolts.

Torque: 620 kg–cm (45 ft–lb, 61 N–m)

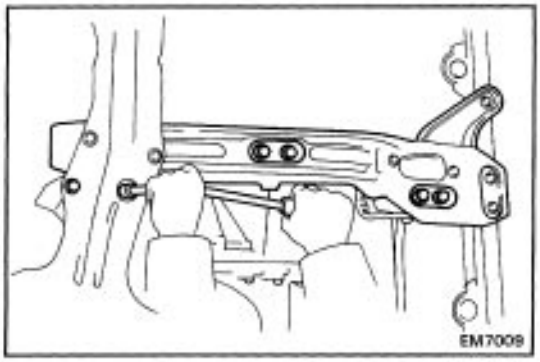

9. INSTALL FRONT, CENTER AND REAR MOUNTING ONTO MEMBER

(a) Temporarily install the front and rear mounting and bolts.

(b) Align each bolt hole at the brackets with the member. Install and torque the bolts.

Torque:	**Front**	**490 kg–cm (35 ft–lb, 48 N–m)**
	Center	**530 kg–cm (38 ft–lb, 52 N–m)**
	Rear	**580 kg–cm (42 ft–lb, 57 N–m)**

(c) Install the two hole covers.

(d) Shake the engine several times to make sure that there is no load on the front mounting insulators.

(e) Install and torque the rear mounting bolt.

Torque: 890 kg–cm (64 ft–lb, 87 N–m)

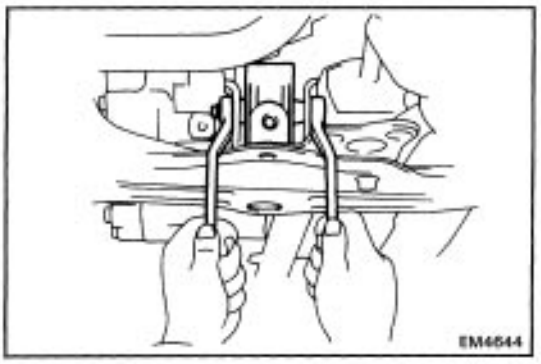

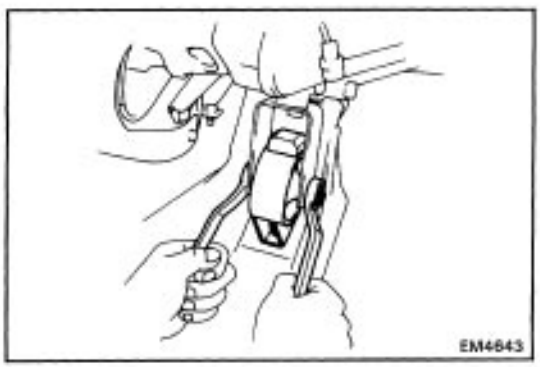

(f) Install and torque the front mounting bolt.

Torque: 890 kg–cm (64 ft–lb, 87 N–m)

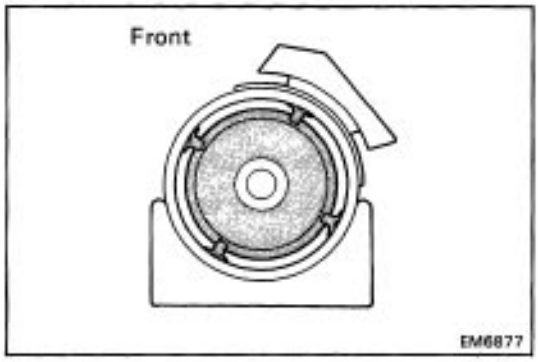

NOTICE: Check that the insulator space is equal ail the way around.

HINT:

- On new insulators, the lower space is wider than the upper space.
- It does not matter if the insulator ribs (4 places) are broken.

10. CONNECT RH AND LH DRIVE SHAFTS TO TRANSAXLE

11. INSTALL FRONT EXHAUST PIPE

(a) Install three new gaskets and the front pipe.

(b) Connect the exhaust pipe to the manifold.
Install and torque three new nuts.

Torque: 630 kg–cm (46 ft–lb, 62 N–m)

(c) Install the two bolts to the pipe clamp.

(d) Install the two bolts and nuts to the catalyic converter and bracket.

(e) Connect the oxygen connector.

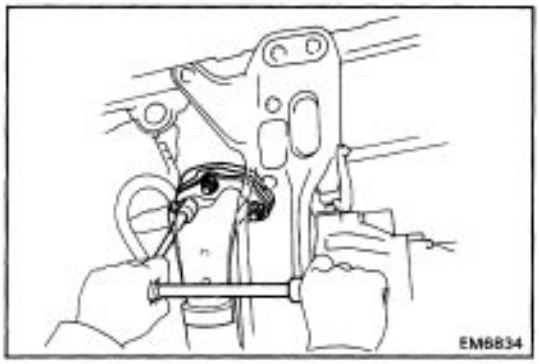

12. LOWER VEHICLE

13. CONNECT OIL COOLER HOSES



14. (w/ PS AND/OR with A/C)
CONNECT PS PUMP AND A/C COMPRESSOR

(a) Install the PS pump and pulley with the bracket.
Install and tighten the brackets bolts.

Torque: 400 kg–cm (29 ft–lb, 39 N–m)

(b) Tighten the PS pump lock bolt and pivot bolts.

(c) Connect oil pressure connector.

(d) Install the compressor bracket and tighten the bolts and nut.

Torque: Bolt 480 kg–cm (35 ft–lb, 47 N–m)
Nut 450 kg–cm (33 ft–lb, 44 N–m)

(e) Install the compressor and tighten the four mounting bolts.

Torque: 250 kg–cm (18 ft–lb, 25 N–m)

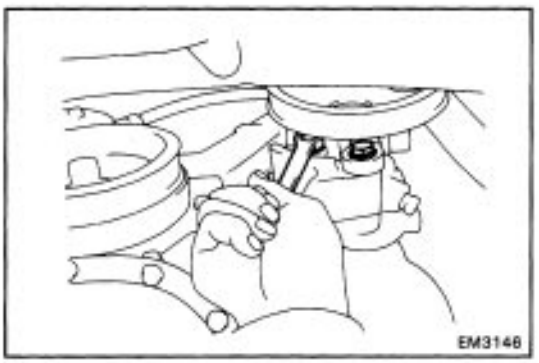

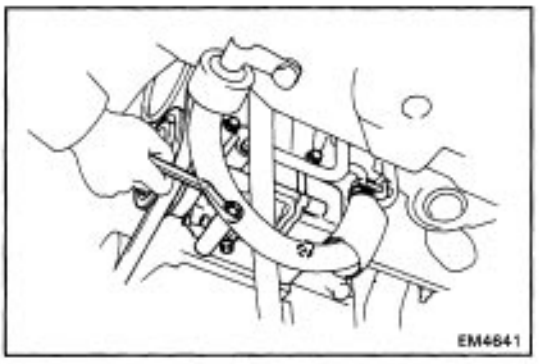

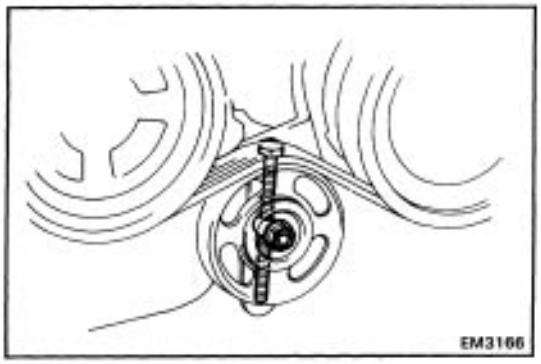

(f) Install the drive belt, and temporarily tighten the idler pulley bolt.

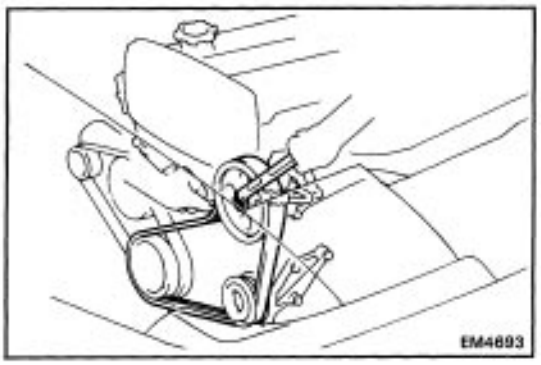

(g) Tighten the PS pump pulley nut.
Torque: 390 kg–cm (28 ft–lb, 38 N–M)
(h) Connect the two A/C connectors.

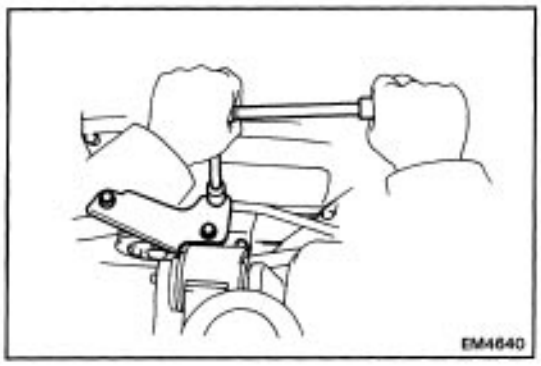

(i) Install the PS pump pipe clamp bolt.
(j) Install and tighten the RH mounting stay and three bolts with PS pipe clamp.
Torque: 430 kg–cm (31 ft–lb, 42 N–m)

15. ADJUST PS DRIVE BELT (See page EM–52)
PS drive belt tension:
New belt 175 ± 5 lb
Used belt 115 ± 20 lb

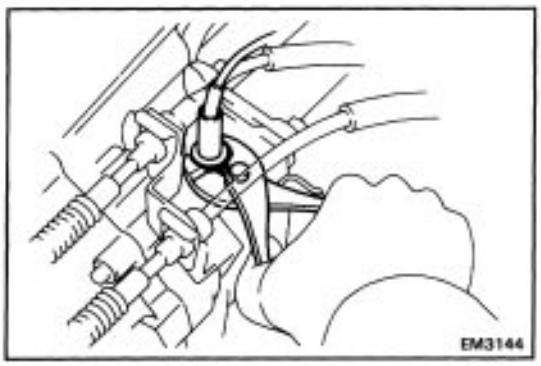

16. CONNECT SPEEDOMETER CABLE

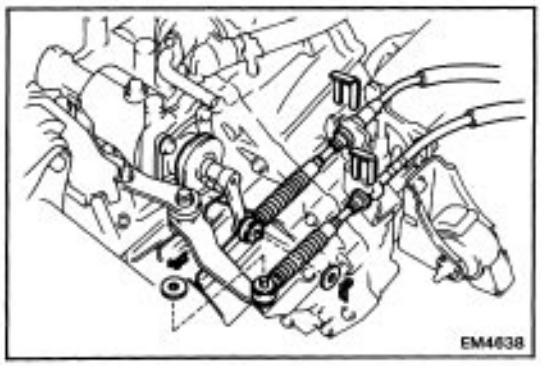

17. CONNECT CONTROL CABLES
(a) Connect the control cables to the shift outer lever and select lever.
(b) Install the retainers, washers and clips.

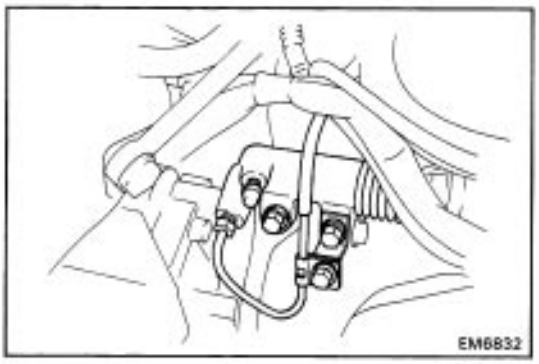

18. INSTALL RELEASE CYLINDER

(a) Install the release cylinder.

(b) Tighten the three bolts.

19. CONNECT HEATER AND AIR HOSES TO AIR VALVE

20. CONNECT FUEL RETURN HOSE TO PRESSURE REGULATOR

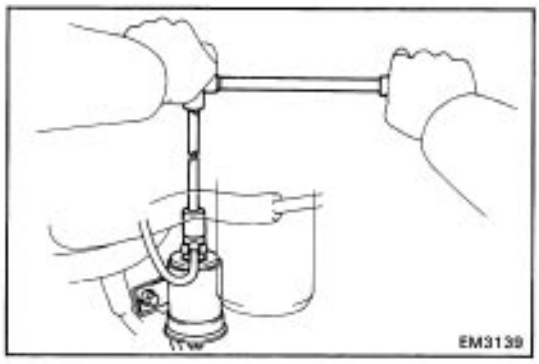

21. CONNECT INLET FUEL HOSE TO FUEL FILTER

Torque: 300 kg–cm (22 ft–lb, 29 N–m)

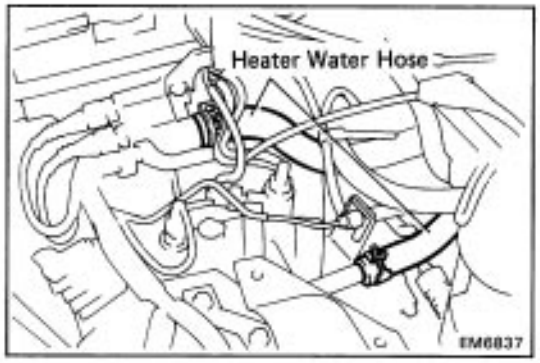

22. CONNECT HEATER WATER HOSES

(a) Connect the heater hose to the cylinder head rear cover.

(b) Connect the heater hose to the water inlet housing.

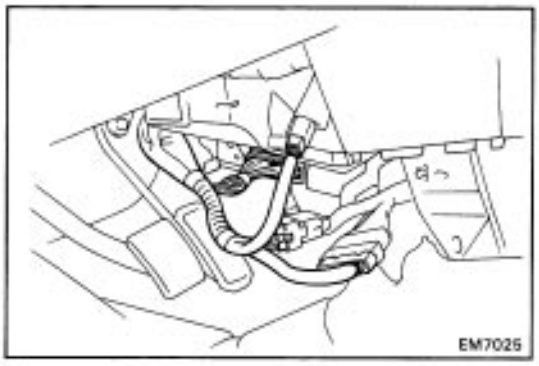

23. CONNECT ENGINE WIRE

(a) Push in the engine wire through the cowl panel.

(b) Connect the four connectors to the cowl wire and ECU.

(c) Install the center cover in front of the console box.

(d) Install rear and front console boxes.

(e) Connect the following connectors:

- Noise filter connector
- Ground strap connector and bolt
- Check connector
- (with A/C)
  A/C wire connector

(f) Install the No.2 junction block and No.5 relay block with the three nuts.

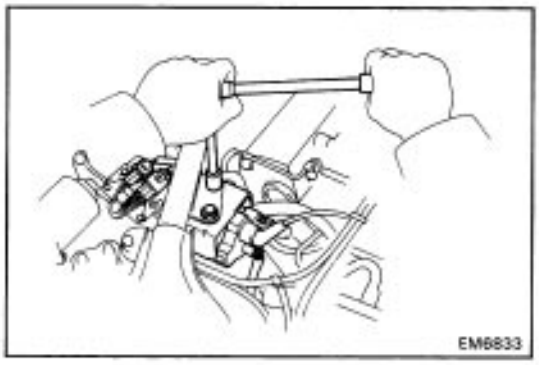

24. INSTALL IGNITION COIL

(a) Install the ignition coil with the bracket and two bolts.

(b) Connect the high–tension code.

(c) Connect the two ignition connectors.

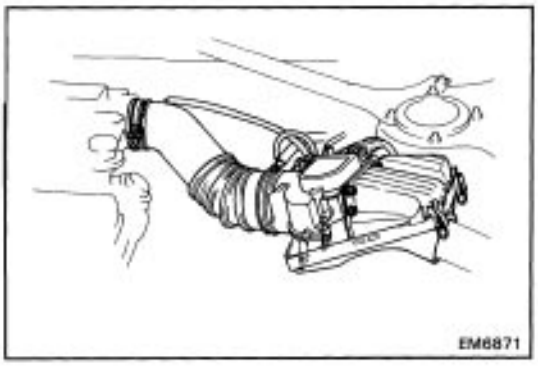

25. CONNECT FOLLOWING HOSES:

- Brake booster vacuum hose
- Charcoal canister vacuum hose

26. INSTALL WASHER TANK

27. INSTALL AIR CLEANER ASSEMBLY

(a) Install the air cleaner support bracket with two bolts.
(b) Install the air cleaner case with the three bolts.
(c) Connect the harness clamp to the boss of the case.
(d) Install the air cleaner filter element.
(e) Connect the air cleaner hose, and install the air cleaner cap and air flow meter with the four clips.
(f) Tighten the air cleaner hose clamp bolt.
(g) (with A/C)
Connect the air hoses.
(h) Connect the vacuum hoses to the VSV.
(i) Connect the VSV connector.
(j) Connect the air flow meter connector.

28. (w/ CRUISE CONTROL)
INSTALL CRUISE CONTROL ACTUATOR

29. CONNECT ACCELERATOR WIRE TO BRACKET

30. INSTALL RADIATOR WITH COOLING FAN
(See page CO–19)

31. REFILL WITH COOLANT
Total capacity (w/ heater)
6.0 liters (6.3 US qts, 5.3 Imp. qts)

32. REFILL MANUAL TRANSAXLE OIL
Oil grade : API GL–4 or GL–5
Viscosity : SAE 75W–90
Capacity : 2.6 liters (2.7 US qts, 2.3 Imp. qts)

33. REFILL WITH ENGINE OIL
Fill the engine with new oil, API grade SG multigrade, fuel efficient and recommended viscosity oil.
Capacity: Dry fill 4.1 liters (4.3 US qts, 3.6 Imp. qts)
Drain and refill (w/o oil filter change)
3.4 liters (3.6 US qts, 3.0 Imp. qts)
Drain and refill (w/ oil filter change)
3.7 liters (3.9 US qts, 3.3 Imp. qts)

34. INSTALL BATTERY

35. START ENGINE AND CHECK FOR LEAKS
Warm up the engine and inspect leakage.

36. INSTALL RH AND LH ENGINE UNDER COVER

37. INSTALL HOOD

EXHAUST SYSTEM

EXHAUST PIPE

COMPONENTS

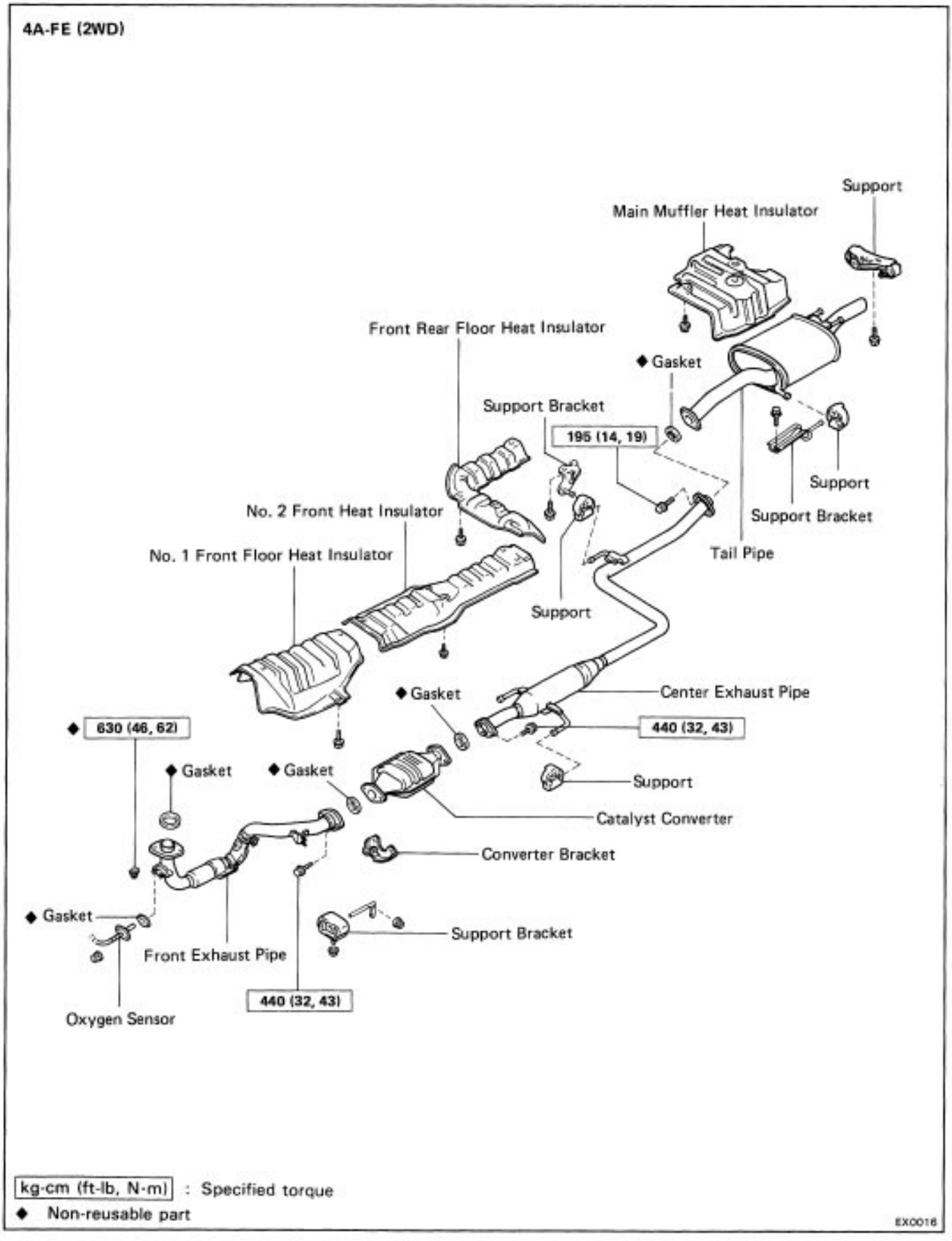

COMPONENTS (Cont'd)

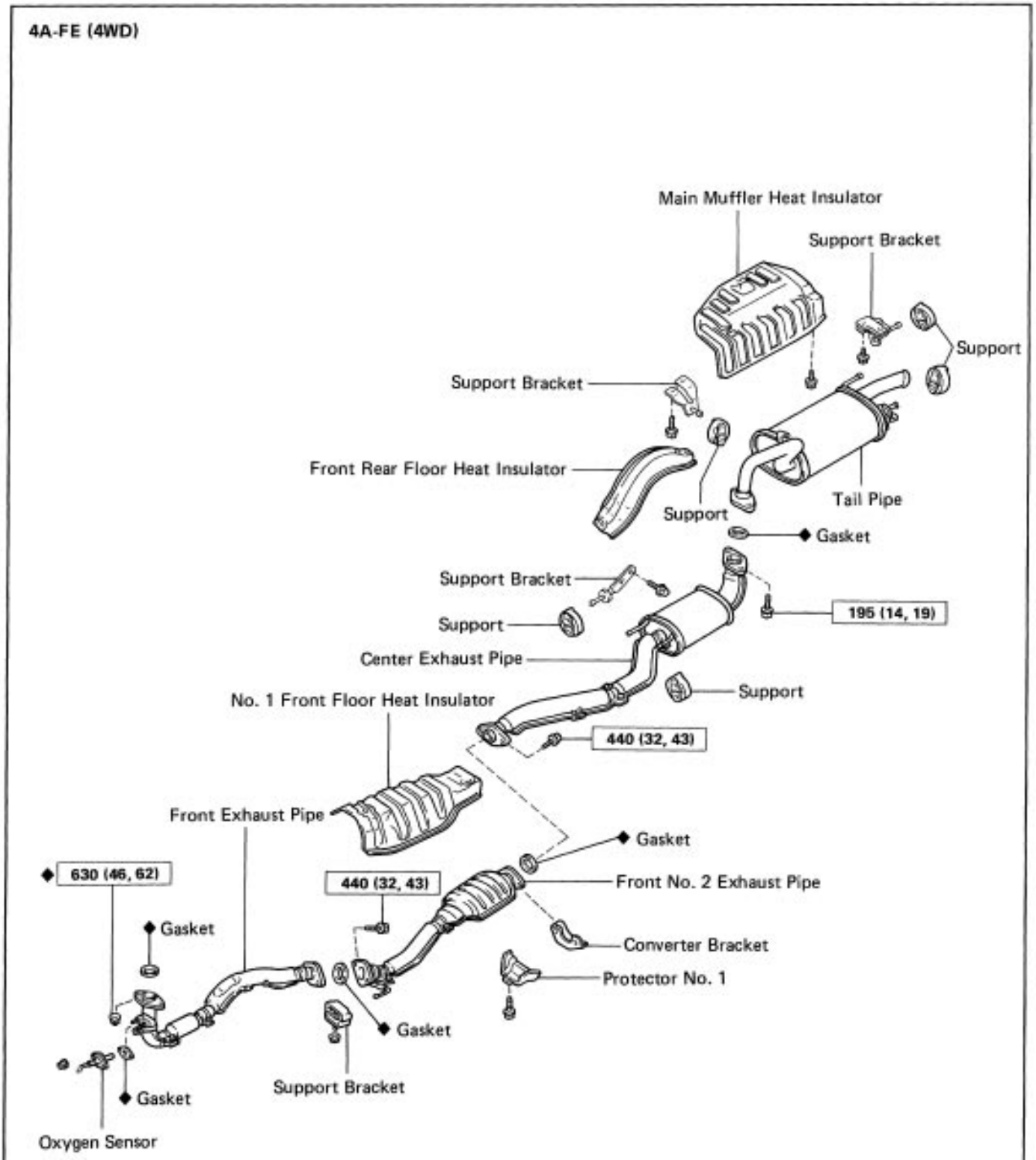

COMPONENTS (Cont'd)

4A-GE

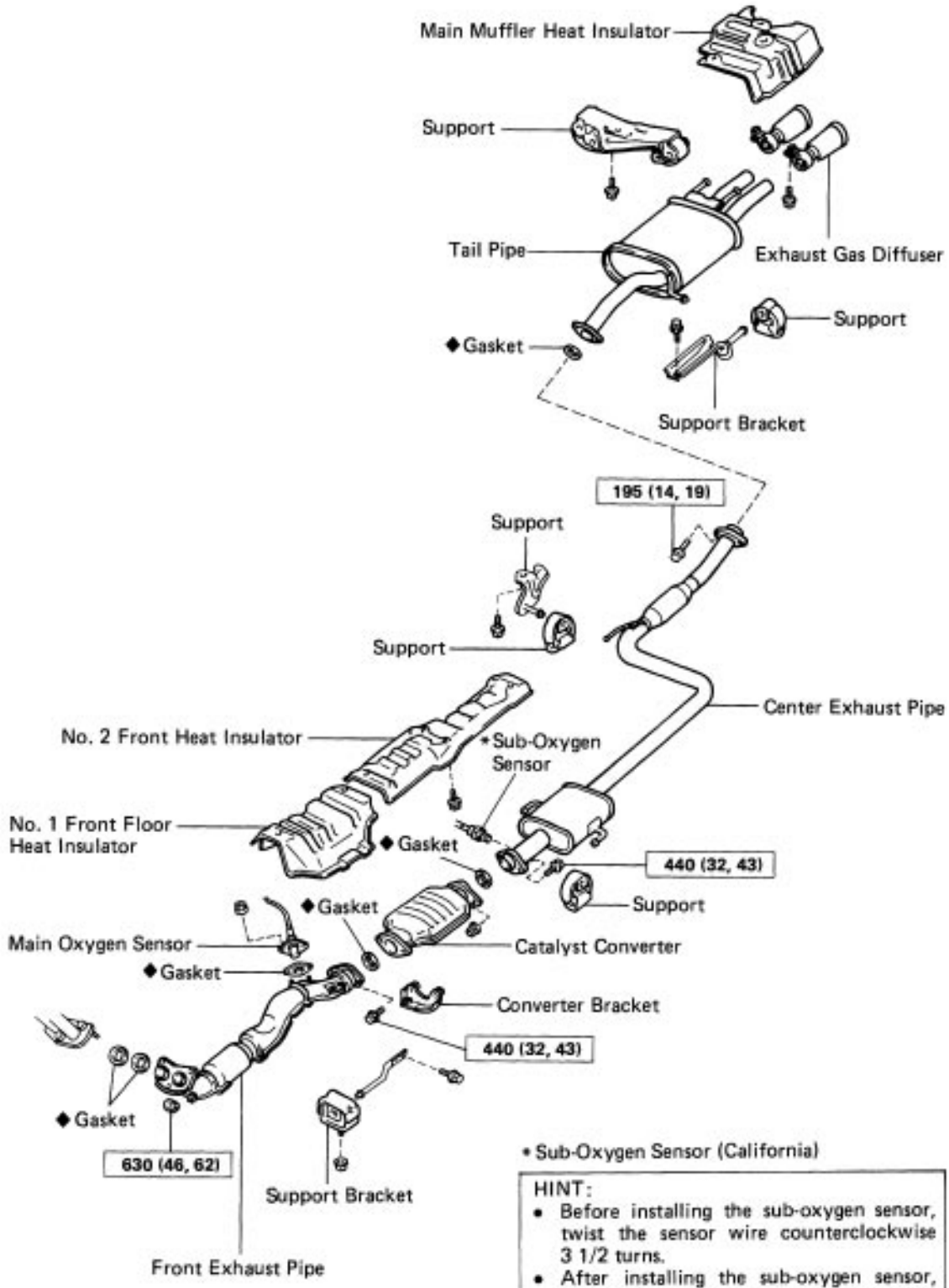

EFI SYSTEM

4A–FE ENGINE

DESCRIPTION

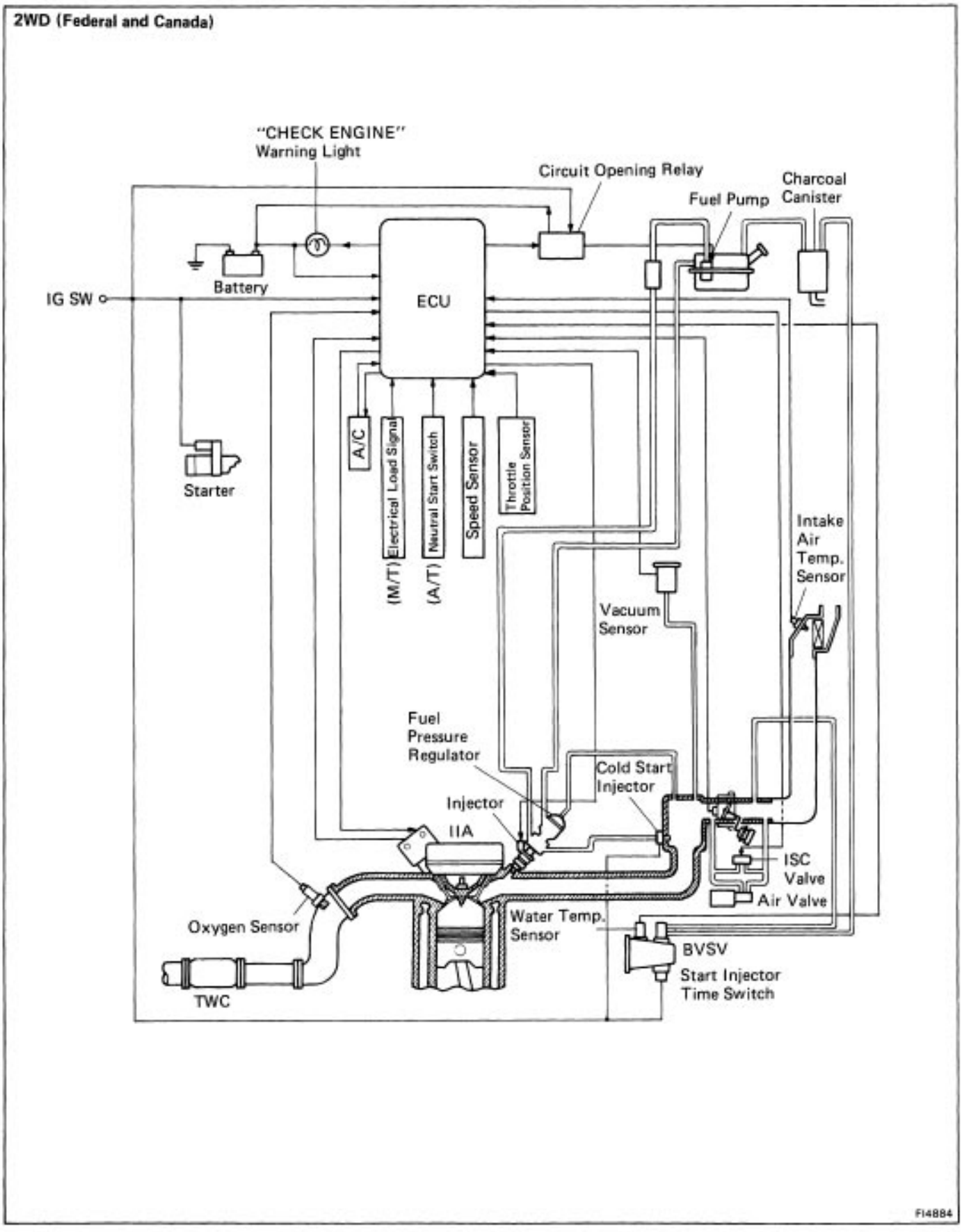

DESCRIPTION (Cont'd)

2WD (California) and 4WD

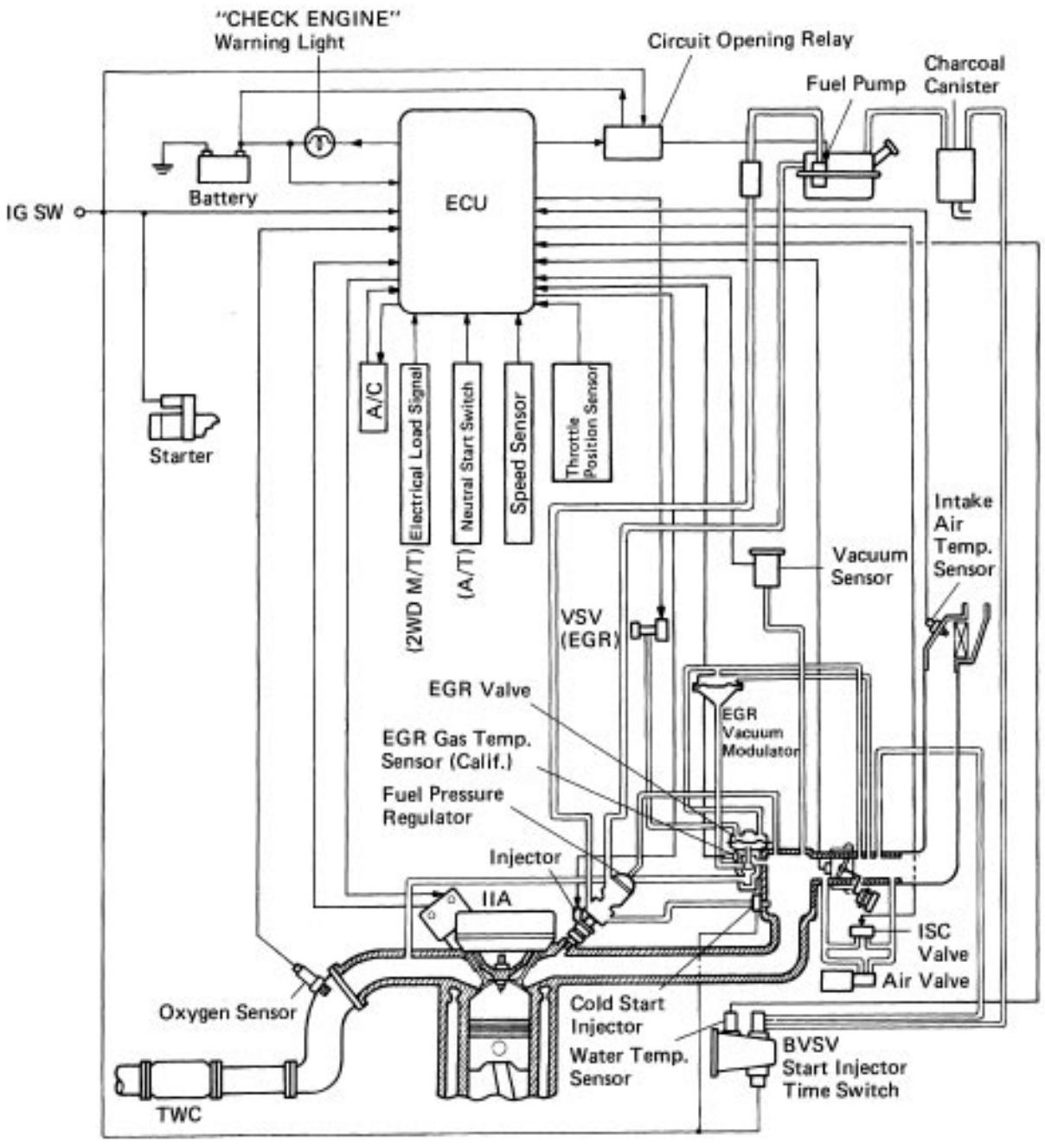

The EFI system is composed of three basic subsystems: Fuel, Air Induction and Electronic Control Systems.

FUEL SYSTEM

Fuel is supplied under constant pressure to the EFI injectors by an electric fuel pump. The injectors inject a measured quantity of fuel into the intake manifold in accordance with signals from the ECU (Electronic Control Unit).

AIR INDUCTION SYSTEM

The air induction system provides sufficient air for engine operation.

ELECTRONIC CONTROL SYSTEM

The 4A–FE engine is equipped with a Toyota Computer Control System (TCCS) which centrally controls the EFI, ESA, Diagnosis and other systems by means of an Electronic Control Unit (ECU formerly EFI computer) employing a microcomputer.

By means of the ECU, the TCCS controls the following functions:

1. Electronic Fuel Injection (EFI)

   The ECU receives signals from various sensors indicating changing engine operating conditions such as:
   Intake manifold absolute pressure
   Intake air temperature
   Coolant temperature
   Engine revolution
   Throttle valve opening angle (IDL, PSW)
   Exhaust oxygen content etc.
   These signals are utilized by the ECU to determine the injection duration necessary for an optimum air–fuel ratio.

2. Electronic Spark Advance (ESA)

   The ECU is programmed with data for optimum ignition timing under any and all operating conditions. Using data provided by sensors which monitor various engine functions (rpm, coolant temperature, etc.), the microcomputer (ECU) triggers the spark at precisely the right instant. (See IG section)

3. Diagnosis

   The ECU detects any malfunctions or abnormalities in the sensor network and lights the ”CHECK ENGINE” warning light on the instrument panel. At the same time, the trouble is identified and a diagnostic code is recorded by the ECU. The diagnostic code can be read by the number of blinks of the check engine warning light when terminals TE1 and E1 are connect–circuit. The diagnostic codes are included later on see page FI–25.

4. Fail–Safe Function

   In the event of a sensor or the ECU malfunctioning, a back–up circuit will take over to provide minimal drivability, and the ”CHECK ENGINE” warning light will light.

PRECAUTIONS

1. Before working the fuel system, disconnect the cable from the negative terminal (–) from the battery.
   HINT: Any diagnostic code retained by the computer will be erased when the battery terminal is removed. Therefore, if necessary, read the diagnostic code before removing the battery terminal.
2. Do not smoke or work using an open frame when working the fuel system.
3. Keep gasoline off rubber or leather parts.

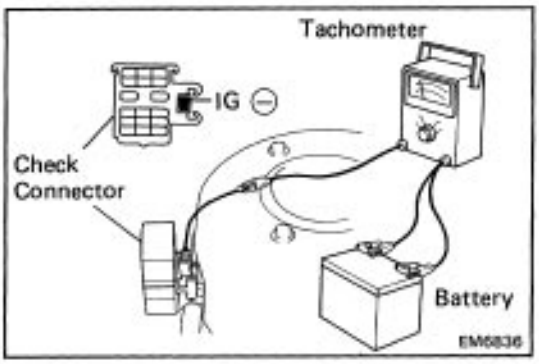

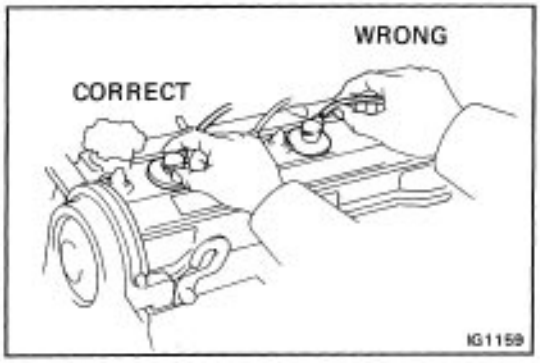

INSPECTION PRECAUTIONS

MAINTENANCE PRECAUTIONS

1. CHECK FOR CORRECT ENGINE TUNE–UP

2. PRECAUTIONS WHEN CONNECTING GAUGE

(a) Use the battery as the power source for the timing light, tachometer, etc.

(b) Connect the test probe of a tachometer to the terminal IG(–) of the check connector.

3. IN EVENT OF ENGINE MISFIRE FOLLOWING PRECAUTIONS SHOULD BE TAKEN

(a) Check proper connection of battery terminals, etc.

(b) Handle high–tension cords carefully.

(c) After repair work, check that all ignition system lines are reconnected securely.

(d) When cleaning the engine compartment, be especially careful to protect the electrical system from water.

4. PRECAUTIONS WHEN HANDLING OXYGEN SENSOR

(a) Do not allow the oxygen sensor to drop or hit against and object.

(b) Do not allow the sensor to come in contact with the water.

IF CAR IS EQUIPPED WITH MOBILE RADIO SYSTEM (HAM, CB, ETC)

The ECU has been designed so that it will not be affected by outside interference.

However, if your vehicle is equipped with a CB radio transceiver, etc. (even one with about 10 W output) it may, at times, have an effect upon ECU operation, especially if the antenna and feeder are installed nearby.

Therefore, observe the following precautions:

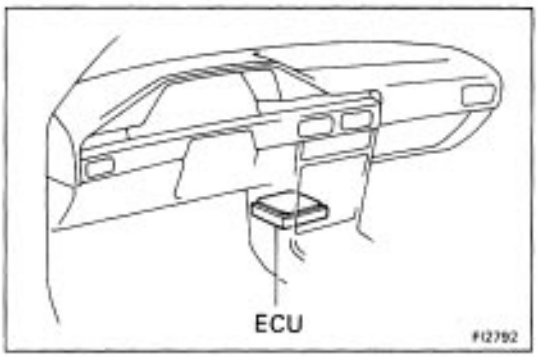

(a) Install the antenna as far as possible from the ECU. The ECU is located behind the center console, so the antenna should be installed in the rear of the vehicle.

(b) Keep the antenna feeder as far away as possible from the ECU wires at least 20 cm (7.87 in.), and especially, do not wind them together.

(e) Insure that the feeder and antenna are properly adjusted.

(d) Do not equip your vehicle with a powerful mobile radio system.

(e) Do not open the cover or the case of the ECU unless absolutely necessary. (If the IC terminals are touched, the IC may be destroyed by static electricity.)

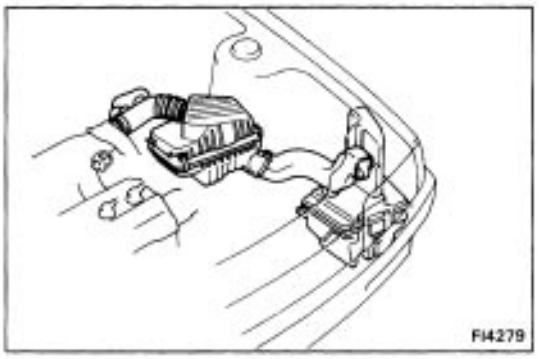

AIR INDUCTION SYSTEM

1. Make sure that oil dipstick, oil filler cap, PCV hose, etc., are all securely fitted, otherwise the engine may run out of tune.
2. Disconnection, looseness or cracks in the parts of the air intake system between the top of the air cleaner and cylinder head will allow air suction and cause the engine to run out of tune.

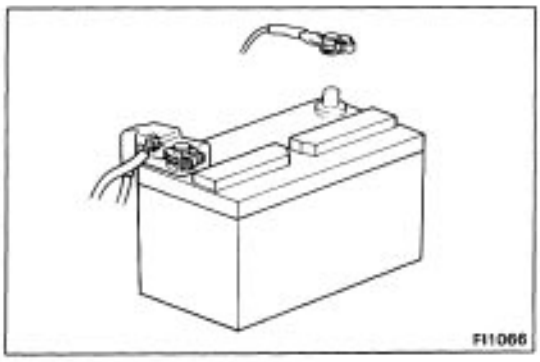

ELECTRONIC CONTROL SYSTEM

1. Before removing EFI wiring connectors, terminals, etc., first disconnect the power by either turning the ignition switch OFF or disconnecting the battery terminals.
2. When installing a battery, be especially careful not to incorrectly connect the positive and negative cables.
3. Do not jolt parts during removal or installation. Handle all EFI parts carefully especially the ECU.
4. Do not be careless during troubleshooting as there are numerous transistor circuits and contact with terminal can cause further trouble.
5. Do not open the ECU cover.
6. When inspecting during rainy weather, take care to prevent entry of water. Also, when washing the engine compartment, prevent water from getting on the EFI parts and wiring connectors.
7. Parts should be replaced as an assembly.

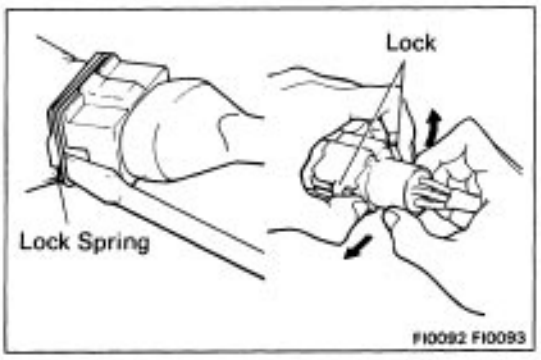

8. Care is required when pulling out the inserting wiring connectors.
   (a) Release the lock and pull out the connector.

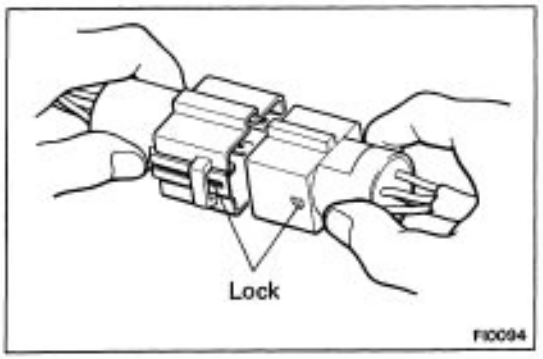

   (b) Fully insert the connector and insure that it is locked.

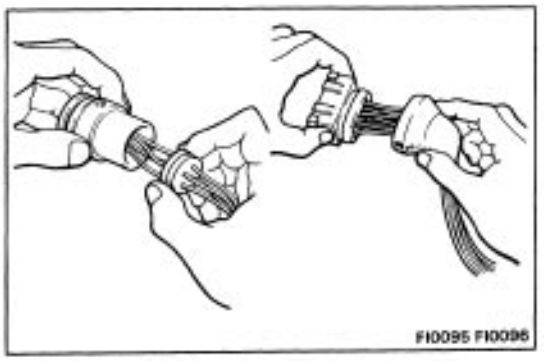

9. When inspecting a connector with a circuit tester.
   (a) Carefully take out the water–proofing rubber if it is a water–proof type connector.

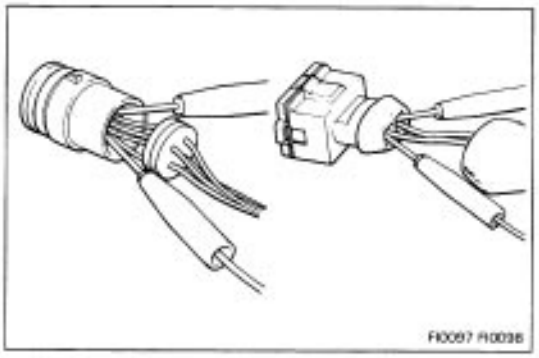

(b) Insert the tester probe into the connector from the wiring side when checking continuity, amperage or voltage.
(c) Do not apply unnecessary force to the terminal.
(d) After checking, install the water–proofing rubber on the connector securely.

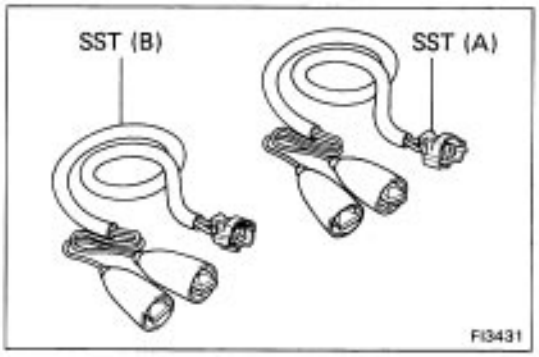

10. Use SST for inspection or testing of the injector, cold start injector of its wiring connector.
SST 09842–30055 (A) and 09842–30070 (B)

FUEL SYSTEM

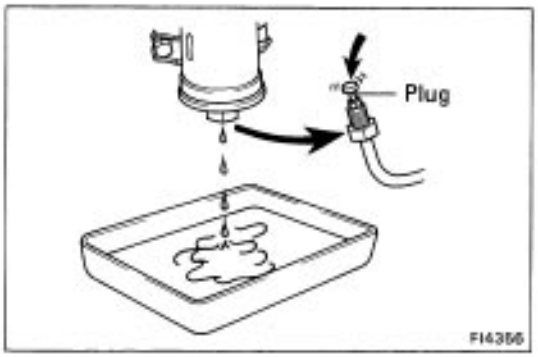

1. When disconnecting the high fuel pressure line, a large amount of gasoline will spill out, so observe the following procedure.
(a) Put a container under the connection.
(b) Slowly loosen the connection
(c) Disconnect the connection
(d) Plug the connection with a rubber plug.

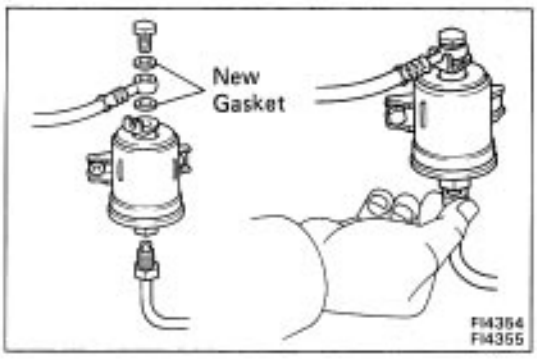

2. When connecting the flare nut or union bolt on the high pressure pipe union, observe the following procedure:
(Union bolt type)
(a) Always use a new gasket.
(b) Hand tighten the union bolt.
(c) Tighten the bolt to the specified torque.
Torque: 300 kg–cm (22 ft–lb, 29 N–m)

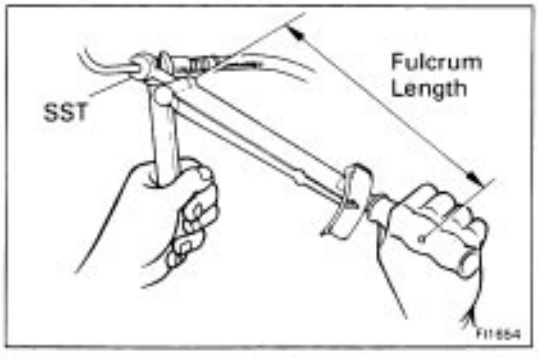

(Flare nut type)
(a) Apply a thin coat of oil to the flare and tighten the flare nut by hand.
(b) Then using SST, tighten the nut to the specified torque.
SST 09631–22020
Torque: 310 kg–cm (22 ft–lb, 30 N–m)
HINT: Use a torque wrench with a fulcrum length of 30 cm 0 1.81 in.)

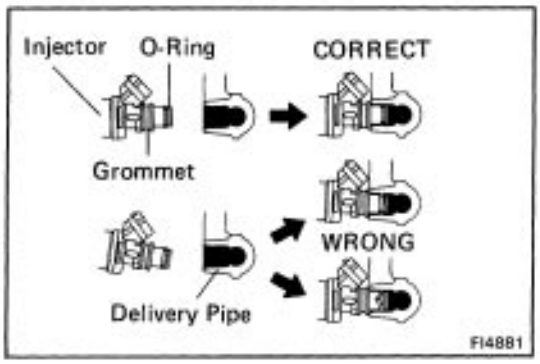

3. Observe the following precautions when removing and installing the injectors.
   (a) Never reuse a 0–ring.
   (b) When placing an O–ring on the injector, use care not to damage it in any way.
   (c) Lubricate the O–ring with spindle all or gasoline before installing – never use engine, gear or brake oil.

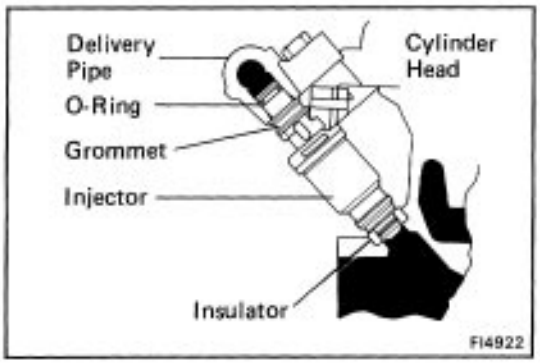

4. Install the injector to the delivery pipe and cylinder head as shown in the illustration.

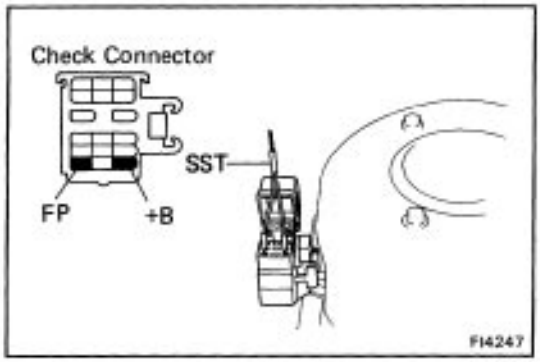

5. Check that there are no fuel leaks after performing any maintenance on the fuel system.
   (a) with engine stopped, turn the ignition switch ON.
   (b) Using SST, connect terminals + B and FP of the check connector.
   SST 09843–18020
   HINT: The check connector is located near the air cleaner.

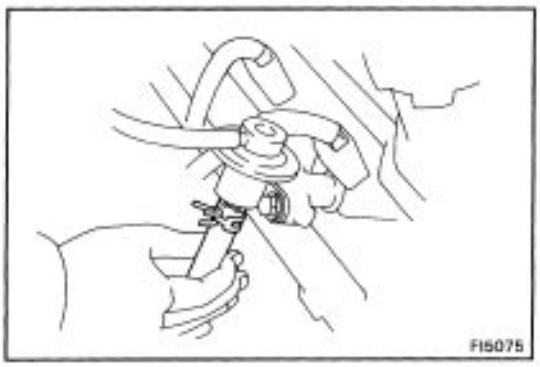

   (c) When the fuel return hose is pinched, the pressure within the high pressure line will raise to about 3 kg/cm2 (42.6 psi, 294 kPa). In this state, check to see that there are no leaks from any part of the fuel system.
   NOTICE: Always pinch the hose. Avoid bending as it may cause the hose to crack.

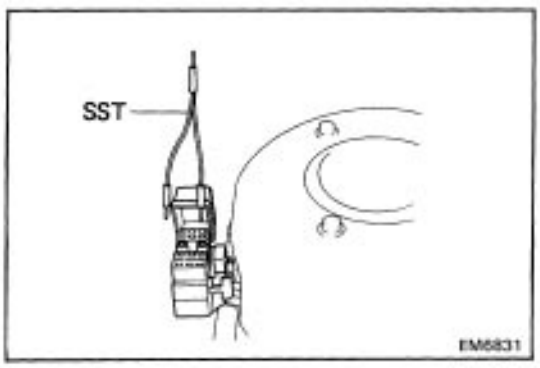

   (d) Remove SST from the check connector.

TROUBLESHOOTING

TROUBLESHOOTING HINTS

1. Engine troubles are usually not caused by the EFI system. When troubleshooting, always first check the condition of the other system.
   (a) Electronic source
   - Battery
   - Fusible links
   - Fuses

   (b) Body ground
   (c) Fuel supply
   - Fuel leakage
   - Fuel filter
   - Fuel pump

   (d) Ignition system
   - Spark plug
   - High–tension cord
   - IIA

   (e) Air induction system
   - Vacuum leaks

   (f) Emission control system
   - PCV system
   - EGR system (Calif. and 4WD)

   (g) Others
   - Ignition timing (ESA system)
   - Idle speed (ISC system)
   - etc.

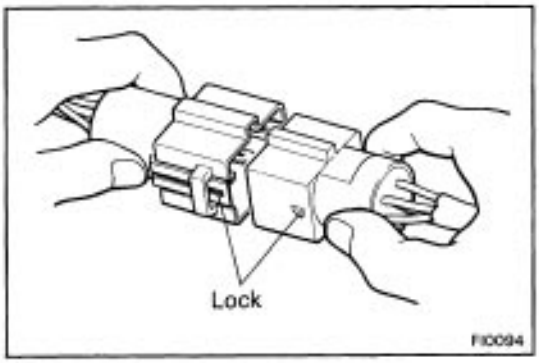

2. The most frequent cause of problems is simply a bad contact in wiring connectors. Always make sure that connections are secure.
   When inspection the connector, pay particular attention to the following points.
   (a) Check to see that the terminals are not bent.
   (b) Check to see that the connector is pushed in completely and locked.

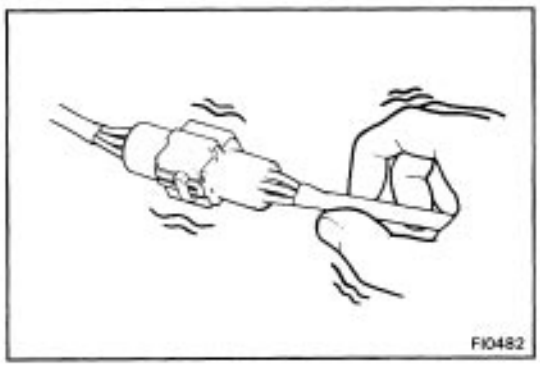

   (c) Check to see that there is no signal change when the connector is slightly tapped or wiggled.
3. Sufficiently troubleshoot for other causes before replacing the ECU. The ECU is of high quality and it is expensive.

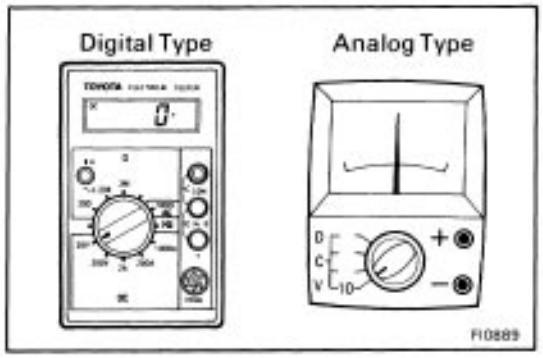

4. Use a volt / ohmmeter with high impedance (10 k Ω / V minimum) for troubleshooting of the electrical circuit. (See page FI–30)

TROUBLESHOOTING PROCEDURES

SYMPTOM – DIFFICULT TO START OR NO START (ENGINE WILL NOT CRANK OR CRANKS SLOWLY)

CHECK ELECTRIC SOURCE → BAD →
1. Battery
   (1) Connection
   (2) Gravity Drive belt charging system
   (3) Voltage
2. Fusible link

OK ↓

CHECK STARTING SYSTEM → BAD →
1. Ignition switch
2. Clutch start switch 1M/T)
   Neutral start switch (A/T)
3. Clutch starter relay (M/T)
4. Starter
5. Wiring/Connection

SYMPTOM – DIFFICULT TO START OR NO START (CRANKS OK)

CHECK DIAGNOSIS SYSTEM
Check for output of diagnostic code. (See page FI–22)
→ Malfunction code(s) →
Diagnostic code(s)
(See pages FI–25 and 26)

Normal code ↓

CHECK FOR VACUUM LEAKS IN AIR INTAKE LINE → BAD →
1. Hose connections
2. PCV hose(s)
3. EGR system – EGR valve stays open
   (Calif. and 4WD)
4. Brake booster line
5. Throttle valve adjusting (open sticky

OK ↓

CHECK IGNITION SPARK
1. Unplug connectors of injector and start injector time switch.
2. Check by holding spark plug cord 8
   10 mm (0.31 0.39 In.) away from engine block while cranking engine.
   A strong spark should be noted.

→ BAD →
1. High–tension cords
2. IIA

OK ↓

CONTINUED ON PAGE FI–12

CONTINUED FROM PAGE FI–11

OK

CHECK IGNITION TIMING
1. Connect terminals TE 1 and E 1 of the check connector.
2. Check ignition timing.
   Standard: 100 BTDC @ idle
   (w/ connected TE1 – E1)

NO → Ignition timing – Adjust
(See page IG–16)

OK

CHECK FUEL SUPPLY TO INJECTOR
1. Fuel in tank
2. Fuel pressure in fuel line
   (1) Connect terminals +13 and FP of the check connector.
   (2) Fuel pressure at fuel hose of fuel filter can be felt. (See page FI–45)

BAD →
1. Fuel line Leakage deformation
2. Fuse
3. Circuit opening relay (See page FI–72)
4. Fuel pump (See page FI–44)
5. Fuel filter
6. Fuel pressure regulator
   (See page FI–53)

OK

CHECK SPARK PLUGS
Plug gap: 0.8 mm (0.031 in.)
HINT: Check compression pressure and valve clearance if necessary.

NO →
1. Spark plugs (See page IG–6)
2. Compression pressure (See page EM–29)
   Minimum: 10.0 kg/cm2
   (142 psi, 981 kPa)
   at 250 rpm
3. Valve clearance (Cold) (See page EM–16)
   Standard: IN 0.15 – 0.25 mm
   (0.006 – 0.010 in.)
   EX 0.20 – 0.30 mm
   (0.008 – 0.0012 in.)

BAD (ALL Plugs WET) →
1. Injectors shorted or leaking
2. Injector wiring – short circuited
3. Cold start injector – leakage
   (See page FI–50)
4. Start injector time switch
   (See page FI–74)

OK

CHECK AUXILIARY AIR VALVE
(See page FI–69)

BAD →
1. Auxiliary air valve
2. Water hoses
3. Air hoses

OK

CHECK INTAKE VALVE

BAD → Intake valve–deposit

OK

CHECK EFI ELECTRONIC CIRCUIT USING VOLT/OHMMETER
(See page FI–30)

BAD →
1. Wiring connections
2. Power to ECU
   (1) Fusible links
   (2) Fuses
   (3) EFI main relay
3. Vacuum sensor
4. Water temp. sensor
5. Intake air temp. sensor
6. Injection signal circuit
   (1) Injector wiring
   (2) ECU

SYMPTOM – ENGINE OFTEN STALLS

CHECK DIAGNOSIS SYSTEM
Check for output of diagnostic code.
(See page FI–22)

Malfunction code(s) → Diagnostic code(s)
(See pages FI–25 and 26)

OK ↓

CHECK FUEL SUPPLY TO INJECTOR
1. Fuel in tank
2. Fuel pressure in fuel line
   (1) Connect terminals + B and FP of the check connector.
   (2) Fuel pressure at fuel hose of fuel filter.
   (See page FI–45)

BAD →
1. Fuel line leakage deformation
2. Fuses
3. Circuit opening relay (See page FI–71)
4. Fuel pump (See page FI–44)
5. Fuel filter
6. Fuel pressure regulator
   (See page FI–53)

OK ↓

CHECK AIR FILTER ELEMENT

BAD → Element Clean or replace

OK ↓

CHECK IGNITION TIMING
1. Connect terminals TE1 and E1 of the check connector.
2. Check ignition timing.
   Standard: 100 BTDC @ idle
   (w/ connected TE1 – E1)

NO → Ignition timing – Adjust
(See page IG–16)

OK ↓

CHECK IDLE SPEED (AND IDLE CO CONCENTRATION)
Standard: 700 rpm (2WD), 800 rpm (4WD)

NO → Idle speed Adjust
(See page MA–7)

OK ↓

CHECK SPARK PLUGS
Plug gap: 0.8 mm (0.031 in.)
HINT: Check compression pressure and valve clearance if necessary.

NO →
1. Spark plugs (See page IG–6)
2. Compression pressure (See page EM–29)
   Minimum: 10.0 kg/cm2 (142 psi, 981 kPa) at 250 rpm
3. Valve clearance (Cold) (See page EM–16)
   Standard: IN 0.15 – 0.25 mm (0.006 – 0.010 in.)
   EX 0.20 – 0.30 mm (0.008 – 0.012 in.)

OK ↓

CHECK COLD START INJECTOR
(See page FI–50)

BAD →
1. Cold start injector
2. Start injector time switch
   (See page FI–73)

OK ↓

CONTINUED ON PAGE FI–14

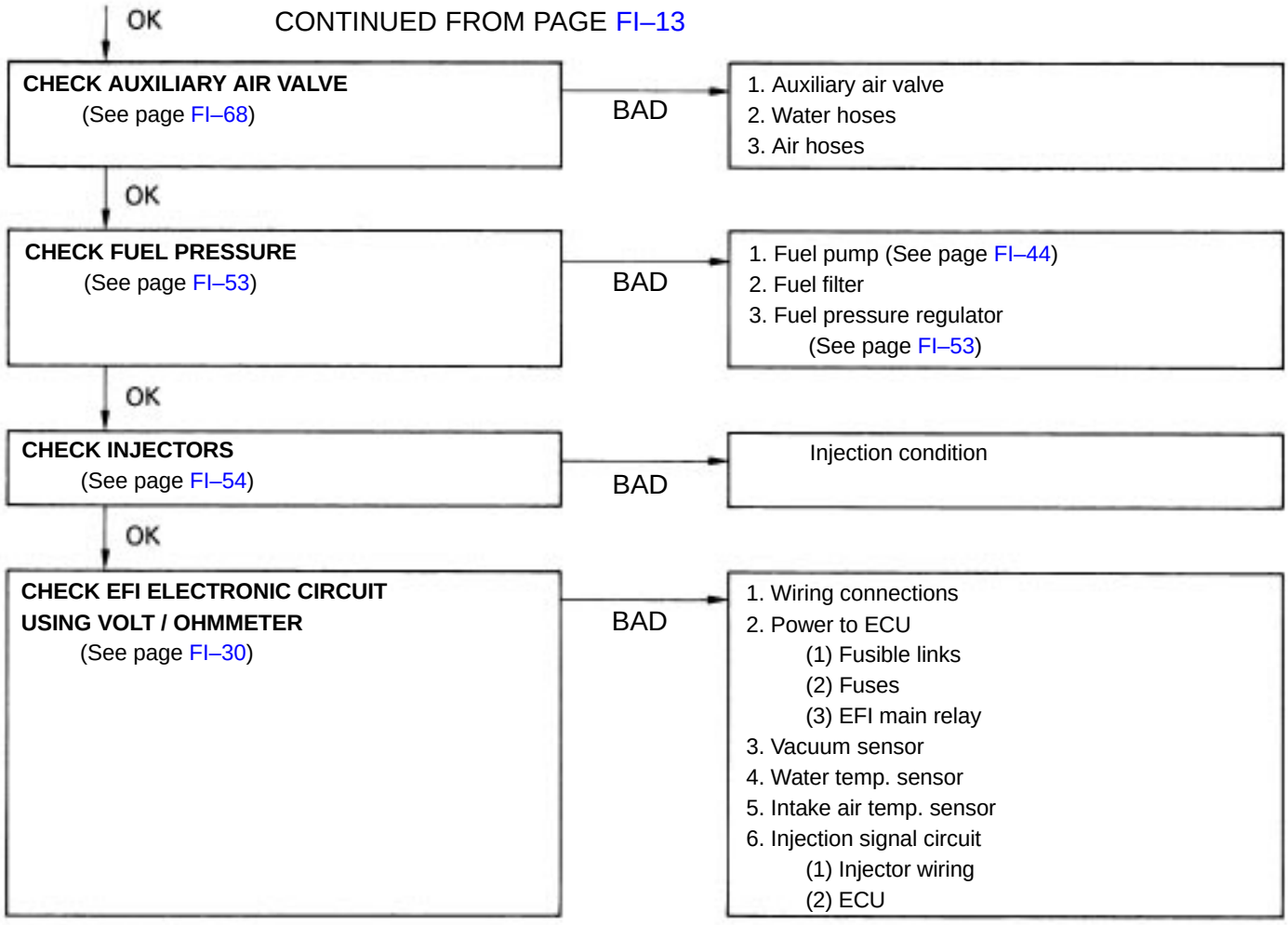

SYMPTOM – ENGINE SOMETIMES STALLS

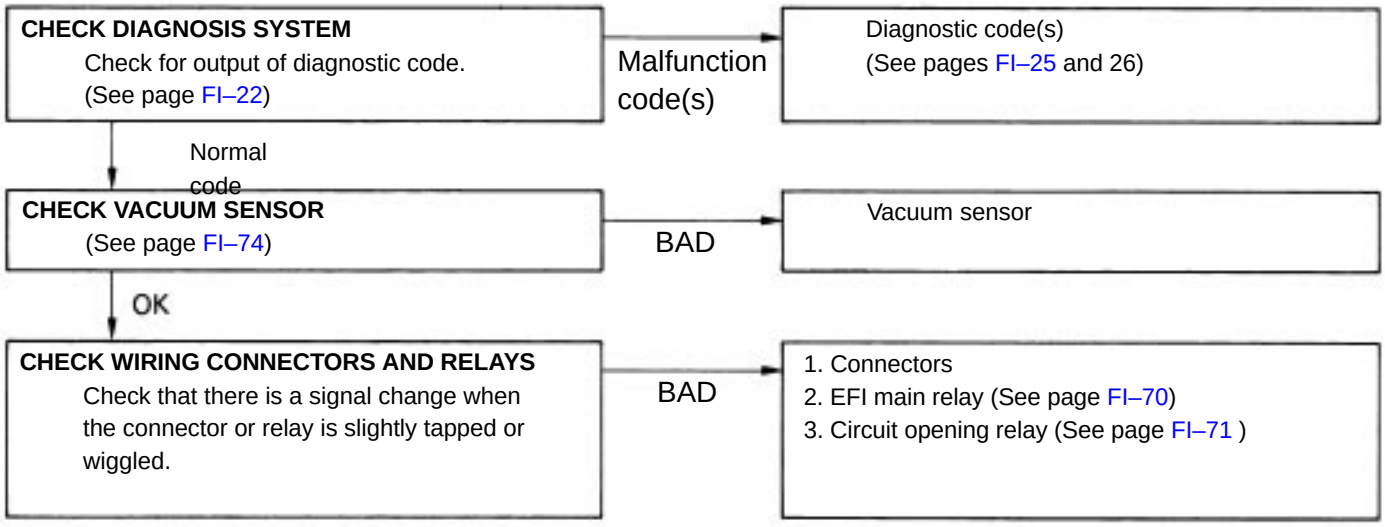

SYMPTOM – ROUGH IDLING AND / OR MISSING

CHECK DIAGNOSIS SYSTEM
Check for output of diagnostic code.
(See page FI–22)

Malfunction code(s) → Diagnostic code(s)
(See pages FI–25 and 26)

Normal code ↓

CHECK FOR VACUUM LEAKS IN AIR INTAKE LINE

BAD →
1. Oil dipstick
2. Hose connections
3. PCV hose(s)
4. EGR system – EGR valve stays open
(Calif. and 4WD)

OK ↓

CHECK AIR FILTER ELEMENT

BAD → Element Clean or replace

OK ↓

CHECK IGNITION TIMING
1. Connect terminals TE 1 and E 1 of the check connector.
2. Check ignition timing.
Standard: 10° BTDC @ idle
(w/ connected TE1 – E1)

NO → Ignition timing – Adjust (See page IG–16)

OK ↓

CHECK IDLE SPEED (AND IDLE CO CONCENTRATION)
Standard: 700 rpm (2WD), 800 rpm 4WD)

NO → Idle speed Adjust
(See page MA–7)

OK ↓

CHECK SPARK PLUGS
Plug gap: 0.8 mm (0.031 in.)
HINT: Check compression pressure and valve clearance if necessary.

NO →
1. Spark plugs (See page IG–6)
2. Compression pressure (See page EM–29)
Minimum: 10.0 kg /cm2
(142 psi, 981 kPa)
at 250 rpm
3. Valve clearance (Cold) (See page EM–16)
Standard: IN 0.15 – 0.25 mm
(0.006–0.010in.)
EX 0.20 – 0.30 mm
(0.008 – 0.012 in.)

OK ↓

CHECK COLD START INJECTOR
(See page FI–50)

BAD →
1. Cold start injector (leakage)
2. Start injector time switch
(See page FI–72)

OK ↓

CONTINUED ON PAGE FI–16

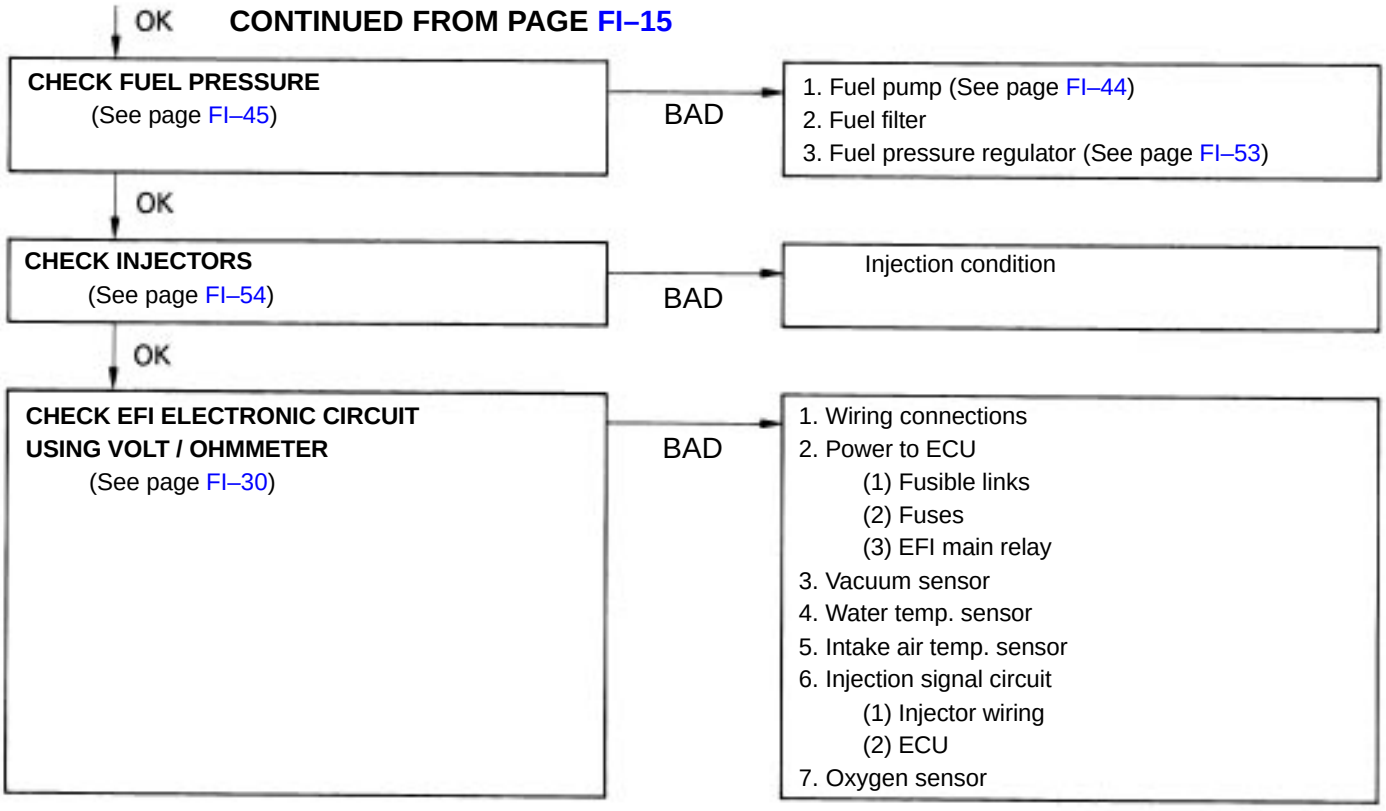
OK
CONTINUED FROM PAGE FI–15
CHECK FUEL PRESSURE
(See page FI–45)
BAD
1. Fuel pump (See page FI–44)
2. Fuel filter
3. Fuel pressure regulator (See page FI–53)
OK
CHECK INJECTORS
(See page FI–54)
BAD
Injection condition
OK
CHECK EFI ELECTRONIC CIRCUIT USING VOLT / OHMMETER
(See page FI–30)
BAD
1. Wiring connections
2. Power to ECU
(1) Fusible links
(2) Fuses
(3) EFI main relay
3. Vacuum sensor
4. Water temp. sensor
5. Intake air temp. sensor
6. Injection signal circuit
(1) Injector wiring
(2) ECU
7. Oxygen sensor

SYMPTOM – HIGH ENGINE IDLE SPEED (NO DROP)

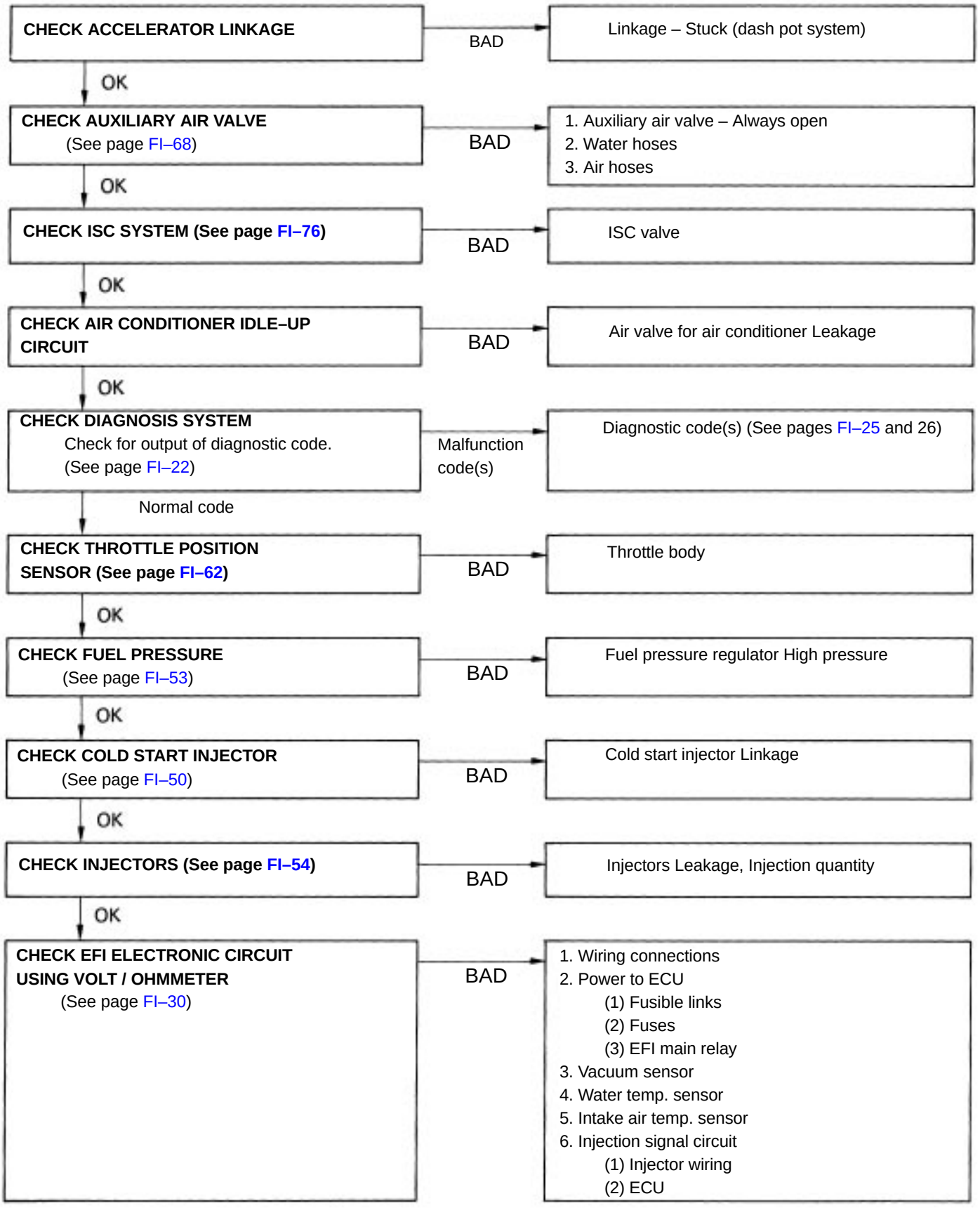

SYMPTOM – ENGINE BACKFIRES–Lean Fuel Mixture

CHECK DIAGNOSIS SYSTEM
Check for output of diagnostic code.
(See page FI–22)

Malfunction code(s) → Diagnostic code(s) (See pages FI–25 and 26)

OK

CHECK IGNITION TIMING
1. Connect terminals TE1 and E1 of the check connector.
2. Check ignition timing.
Standard: 10° BTDC @ idle
(wI connected TE1 – E1)

NO → Ignition timing – Adjust (See page IG–16)

OK

CHECK IDLE SPEED (AND IDLE CO CONCENTRATION)
Standard: 700 rpm (2WD), 800 rpm (4WD)

NO → Idle speed – Adjust (See page MA–7)

OK

CHECK COLD START INJECTOR
(See page FI–50)

BAD →
1. Cold start injection
2. Start injector time switch
(See page FI–74)

OK

CHECK FUEL PRESSURE
(See page FI–45)

BAD →
1. Fuel pump (See page FI–44)
2. Fuel filter
3. Fuel pressure regulator (See page FI–53)

OK

CHECK INJECTORS
(See page FI–54)

BAD → Injectors Clogged

OK

CHECK EFI ELECTRONIC CIRCUIT USING VOLT / OHMMETER
(See page FI–30)

BAD →
1. Wiring connections
2. Power to ECU
(1) Fusible links
(2) Fuses
(3) EFI main relay
3. Vacuum sensor
4. Water temp. sensor
5. Intake air temp. sensor
6. Throttle position sensor
7. Injection signal circuit
(1) Injector wiring
(2) Fuel cut RPM (See page FI–82)
(3) ECU
8. Oxygen sensor

SYMPTOM – MUFFLER EXPLOSION (AFTER FIRE)–Rich Fuel Mixture–Misfire

CHECK DIAGNOSIS SYSTEM
Check for output of diagnostic code.
(See page FI–22)

→ Malfunction code(s) → Diagnostic code(s) (See pages FI–25 and 26)

↓ Normal code

CHECK IGNITION TIMING
1. Connect terminals TE 1 and E 1 of the check connector.
2. Check ignition timing.
Standard: 100 BTDC @ idle (w/ connected TE1 – E1)

→ NO → Ignition timing – Adjust (See page IG–16)

↓ OK

CHECK IDLE SPEED (AND IDLE CO CONCENTRATION)
Standard: 700 rpm (2WD), 800 rpm (4WD)

→ NO → Idle speed Adjust (See page MA–7)

↓ OK

CHECK COLD START INJECTOR
(See page FI–50)

→ BAD →
1. Cold start injection
2. Start injector time switch (See page FI–72)

↓ OK

CHECK FUEL PRESSURE
(See page FI–53)

→ BAD → Fuel pressure regulator

↓ OK

CHECK THROTTLE POSITION SENSOR (See page **FI–62**)

→ BAD → Throttle body

↓ OK

CHECK INJECTORS (See page FI–54)

→ BAD → Injectors Leakage

↓ OK

CHECK SPARK PLUGS
Plug gap: 0.8 mm (0.031 in.)
HINT: Check compression pressure and valve clearance if necessary.

→ NO →
1. Spark plugs (See page IG–6)
2. Compression pressure (See page EM–29)
Minimum: 10.0 kg/cm2 (142 psi, 981 kPa) at 250 rpm
3. Valve clearance (Cold) (See page EM–16)
Standard: IN 0.15 – 0.25 mm (0.006 – 0.010 in.)
EX 0.20 – 0.30 mm (0.008 – 0.012 in.)

↓ OK

CHECK EFI ELECTRONIC CIRCUIT USING VOLT / OHMMETER
(See page FI–30)

→ BAD →
1. Throttle position sensor
2. Injection signal circuit
(1) Injector wiring
(2) Fuel cut PRM (See page FI–82)
(3) ECU
3. Oxygen sensor

SYMPTOM – ENGINE HESITATES AND / OR POOR ACCELERATION

CHECK CLUTCH OR BRAKES → BAD → 1. Clutch Slips 2. Brakes Drag

OK ↓

CHECK FOR VACUUM LEAKS IN AIR INTAKE LINE → BAD → 1. Oil dipstick 2. Hose connections 3. PCV hose(s) 4. EGR system – EGR valve stays open (Calif. and 4WD)

OK ↓

CHECK AIR FILTER ELEMENT → BAD → Element Clean or replace

OK ↓

CHECK DIAGNOSIS SYSTEM
Check for output of diagnostic code.
(See page FI–22)
→ Malfunction code(s) → Diagnostic code(s) (See pages FI–25 and 26)

Normal code ↓

CHECK IGNITION SPARK
1. Unplug connectors of injector and start injection time switch.
2. Check by holding spark plug 8 –10 mm (0.31 – 0.39 in.) away from engine block while cranking engine. A strong spark should be noted.

→ BAD → 1. High–tension cords 2. IIA

OK ↓

CHECK IGNITION TIMING
1. Connect terminals TE 1 and E 1 of the check connector.
2. Check ignition timing.
Standard: 10° BTDC @ idle
(wI connected TE 1 – E 1)

→ NO → Ignition timing – Adjust (See page IG–16)

OK ↓

CHECK FUEL PRESSURE
(See page FI–45)
→ BAD → 1. Fuel pump (See page FI–44) 2. Fuel filter 3. Fuel pressure regulator (See page FI–53)

OK ↓

CHECK INJECTORS
(See page FI–54)
→ BAD → Injection condition

OK ↓

CONTINUED ON PAGE FI–21

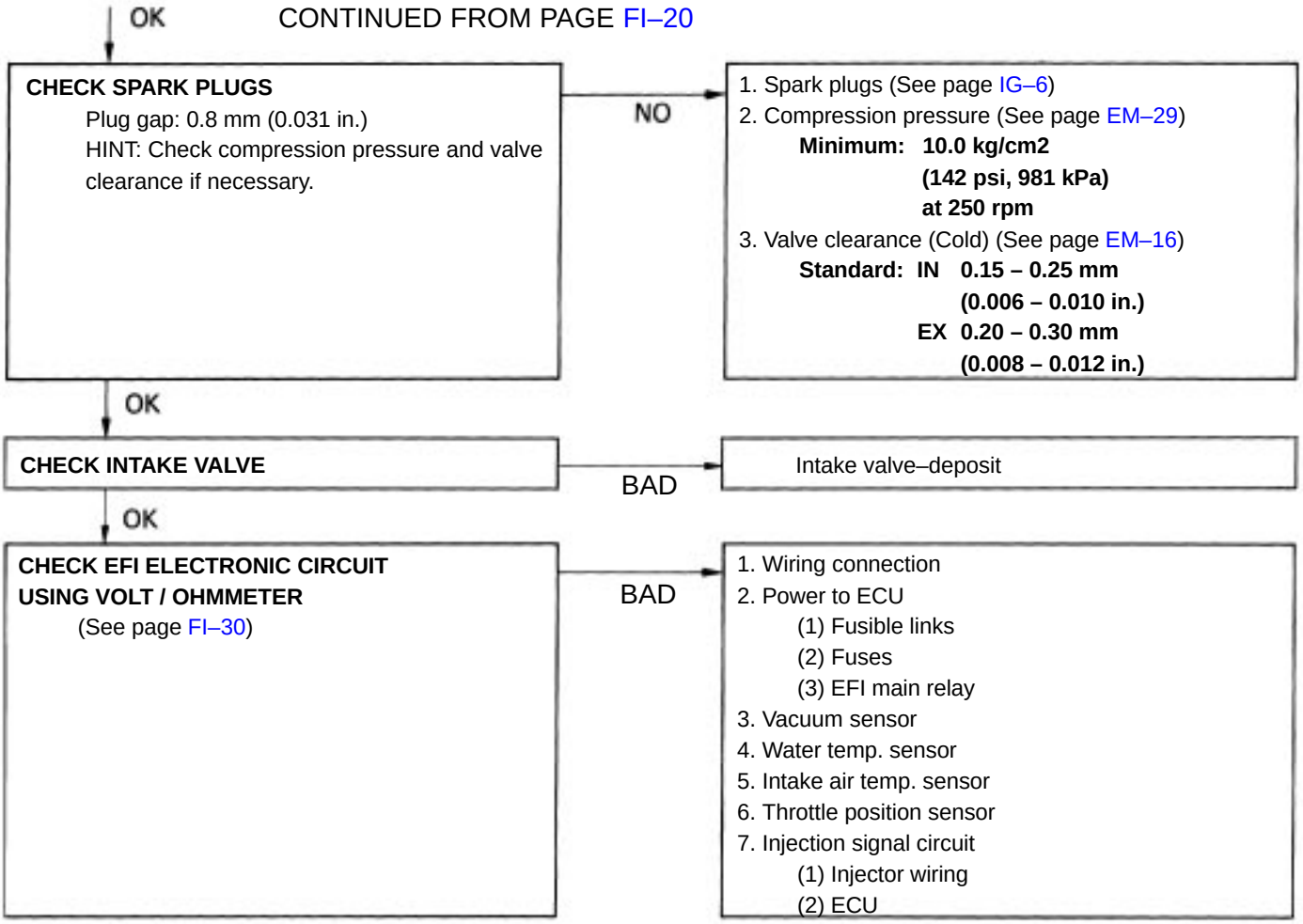
OK
CONTINUED FROM PAGE FI–20
CHECK SPARK PLUGS
Plug gap: 0.8 mm (0.031 in.)
HINT: Check compression pressure and valve clearance if necessary.
NO
1. Spark plugs (See page IG–6)
2. Compression pressure (See page EM–29)
Minimum: 10.0 kg/cm2
(142 psi, 981 kPa)
at 250 rpm
3. Valve clearance (Cold) (See page EM–16)
Standard: IN 0.15 – 0.25 mm
(0.006 – 0.010 in.)
EX 0.20 – 0.30 mm
(0.008 – 0.012 in.)
OK
CHECK INTAKE VALVE
BAD
Intake valve–deposit
OK
CHECK EFI ELECTRONIC CIRCUIT USING VOLT / OHMMETER
(See page FI–30)
BAD
1. Wiring connection
2. Power to ECU
(1) Fusible links
(2) Fuses
(3) EFI main relay
3. Vacuum sensor
4. Water temp. sensor
5. Intake air temp. sensor
6. Throttle position sensor
7. Injection signal circuit
(1) Injector wiring
(2) ECU

DIAGNOSIS SYSTEM

DESCRIPTION

The ECU contains a built–in self–diagnosis system by which troubles with the engine signal network are detected and a ”CHECK ENGINE” warning light on the instrument panel flashes.

By analyzing various signals as shown in the later table (See pages FI–25 and 26) the ECU detects system malfunctions which are related to the various operating parameter sensors or actuator. The ECU stores the failure code associated with the detected failure until the diagnostic system is cleared by removing the fuse EFI with ignition switch off.

The ”CHECK ENGINE” warning light on the instrument panel informs the driver that a malfunction has been detected.

The light goes out automatically when the malfunction has been cleared.

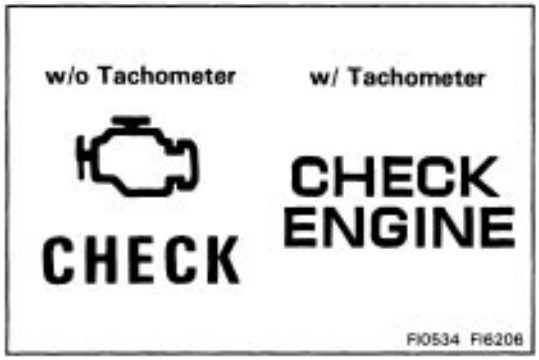

”CHECK ENGINE” WARNING LIGHT CHECK

1. The ”CHECK ENGINE” warning light will comes on when the ignition switch is placed at ON and the engine is not running.
2. When the engine is started, the ”CHECK ENGINE” warning light should go out.
   If the light remains on, the diagnosis system has detected a malfunction or abnormality in the system.

OUTPUT OF DIAGNOSTIC CODES

To obtain an output of diagnostic codes, proceed as follows:

1. Initial conditions
   (a) Battery voltage approx. 12 V
   (b) Throttle valve fully closed (throttle position sensor IDL points closed)
   (c) Transmission in neutral position
   (d) Accessory switches OFF
2. Turn the ignition switch to ON. Do not start the engine.
3. Using SST, connect terminals TE 1 and E 1 of the check connector.
   SST 09843–18020
   HINT: The check connector is located near the air cleaner.

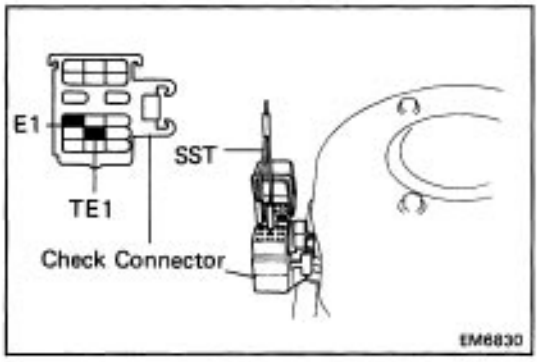

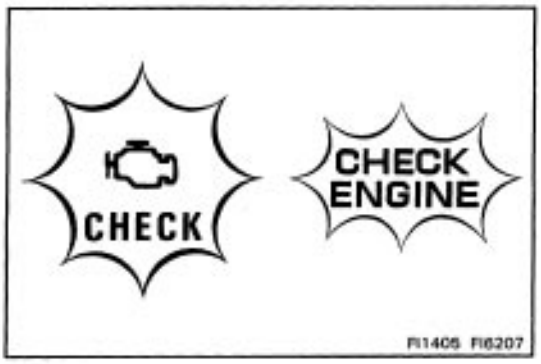

4. Read the diagnostic code as indicated by the number of flashes of the ”CHECK ENGINE” warning light.

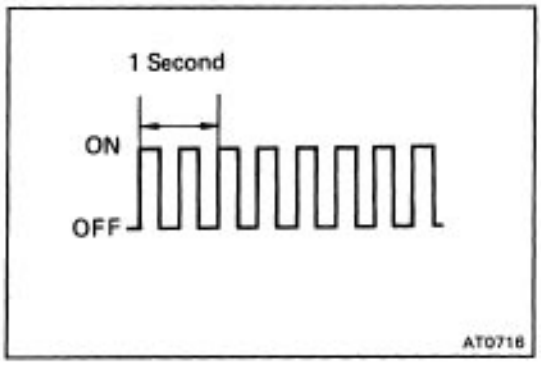

Diagnostic code (See pages FI–25 and 26)

(a) Normal System Operation (no malfunction)

- The light will alternately blink ON and OFF 2 times per second.

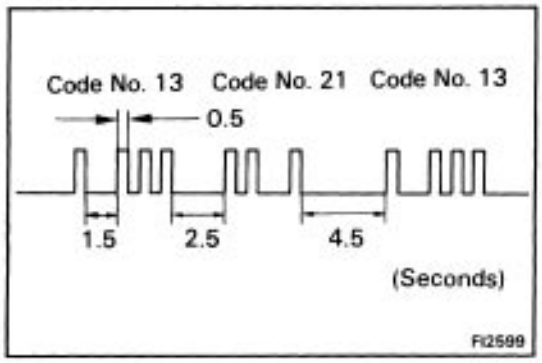

(b) Malfunction Code Indication

- The light will blink a number of times equal to the malfunction code indication as follows:

1. Between the first digit and second digit, 1.5 seconds.
2. Between code and code 2.5 seconds.
3. Between all malfunction codes 4.5 seconds.

The diagnostic code series will be repeated as long as the check connector terminals TE1 and E1 are connected.

HINT: In event of a number of trouble codes, indication will begin from the small value and continue to the larger.

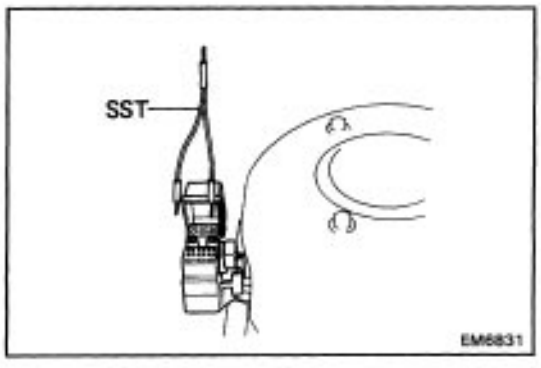

5. After the diagnostic check, remove SST from the check connector.

SST 09843–18020

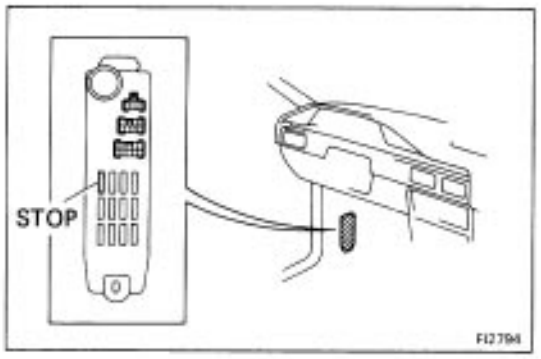

CANCELLING OUT DIAGNOSTIC CODE

1. After repair of the trouble area, the diagnostic code retained in memory by the ECU must be cancelled out by removing the fuse STOP (1 5A), located behind driver's kick panel, for 10 seconds or more, depending on ambient temperature (the lower the temperature, the longer the fuse must be left out) with the ignition switch off.
   HINT:
   - Cancellation can also be down by removing the battery negative (–) terminal, but in this case other memory systems (radio, clock etc.) will also be cancelled out.
   - If the diagnostic code is not cancelled out, it will be retained by the ECU and appear along with a new code in event of future trouble.
   - If it is necessary to work engine components requiring removal of the battery terminal, a check must first be made to see if a diagnostic code has been recorded.
2. After cancellation, perform a road test to confirm that a "normal" code is now read on the "CHECK ENGINE" warning light.
   If the same diagnostic code appears, it indicated that the trouble area has not been repaired thoroughly.

DIAGNOSIS INDICATION

1. Including "normal", the ECU is programmed with the following 13 (Federal and Canada) or 14 (California) diagnostic codes.
2. When 2 or more codes are indicated, the lowest number (code) will appear first.
3. All detected diagnostic codes, except 51, will be retained in memory by the ECU from the time of detection until cancelled out.
4. Once the malfunction is cleared, the "CHECK ENGINE" warning light on the instrument panel will go out but the diagnostic code(s) remain stored in ECU memory (except for code 51).

DIAGNOSTIC CODES

Code No.	Number of blinks "CHECK ENGINE"	System	Diagnosis	Trouble area	See page
–		Normal	This appears when none of the other codes are identified.	–	–
12		RPM Signal	No "NE" or "G" signal to ECU within 2 seconds after engine has been cranked.	• IIA circuit • IIA • Starter signal circuit • ECU	IG–3
13		RPM Signal	No "NE" signal to ECU when the engine speed is above 1,000 rpm.	• IIA circuit • IIA • ECU	
14		Ignition Signal	No "IGF" signal to ECU 4 times in succession.	• Igniter circuit • Igniter • ECU	FI–40
21		Oxygen Sensor Signal	During air–fuel ratio feedback correction, voltage output from the oxygen sensor does not exceed a set value on the lean side and the rich side continuously for a certain period (OX).	• Oxygen sensor circuit • Oxygen sensor • EC U	FI–42
22		Water Temp. Sensor Signal	Open or short circuit in water temp. sensor signal (THW).	• Water temp. sensor circuit • Water temp. sensor • ECU	FI–38
24		Intake Air Temp. Sensor Signal	Open or short circuit in intake air temp. sensor signal (THA).	• Intake air temp. sensor circuit • Intake air temp. sensor • ECU	FI–37
*1 25		Air–Fuel Ratio Lean Malfunction	(1) When air–fuel ratio feedback correction value or adaptive control value continues at the upper (lean) or lower (rich) limit for a certain period of time or adaptive control value is not renewed for a certain period of time. (2) When marked variation is detected in engine revolutions for each cylinder during idle switch on and feedback condition. (3) Open or short circuit in oxygen sensor signal (OX).	• Injector circuit • Injector • Fuel line pressure • Oxygen sensor circuit • Oxygen sensor • Vacuum sensor • Water temp. sensor • ECU	FI–42
*1 26		Air–Fuel Ratio Rich Malfunction		• Injector circuit • Injector • Fuel line pressure • Oxygen sensor circuit • Oxygen sensor • Cold start injector circuit • Cold start injector • Vacuum sensor • Water temp. sensor • ECU	

*1 No. (1) and (2) in the diagnostic contents of codes No.25 and 26 apply to California specification vehicles only, while (3) applies to all models.

DIAGNOSTIC CODES (Cont'd)

Code No.	Number of blinks "CHECK ENGINE"	System	Diagnosis	Trouble area	See page
31	 FI1394	Vacuum Sensor Signal	Open or short circuit intake manifold pressure sensor signal (PIM).	• Vacuum sensor circuit • Vacuum sensor • ECU	FI–36
41	 FI1396	Throttle Position Sensor Signal	The "IDL" and "PSW" signals are output simultaneously for several seconds.	• Throttle position sensor circuit • Throttle position sensor • ECU	FI–33
42	 FI1397	Vehicle Speed Sensor Signal	No "SPD" signal for 8 seconds when engine speed is between 2,300 rpm and 5,500 rpm and coolant temp. is below 80°C (176°F) except when racing the engine.	• Vehicle speed sensor circuit • Vehicle speed sensor • ECU	–
43	 FI1398	Starter Signal	No "STA" signal to ECU until engine speed reaches 800 rpm with vehicle not moving.	• Starter signal circuit • Ignition switch, main relay circuit • ECU	FI–39
*2 71	 FI2622	EGR System Malfunction	• EGR gas temp. is below a predetermined level during EGR operation. • Open circuit in EGR gas temp. sensor signal (THG).	• EGR system (EGR valve, EGR hose etc.) • EGR gas temp. sensor circuit • EGR gas temp. sensor • VSV for EGR • VSV for EGR circuit • ECU	FI–43
51	 FI1399	Switch Condition Signal	No "IDL" signal, "NSW" signal or "A/C" signal to ECU, with the check terminals E1 and TE1 connected.	• A/C switch circuit • A/C switch • A/C amplifier • Neutral start switch circuit • Neutral start switch • Accelerator pedal and cable • Throttle position sensor circuit • Throttle position sensor • ECU	FI–41

* 2 Applicable only to California specification vehicles.

INSPECTION OF DIAGNOSIS CIRCUIT

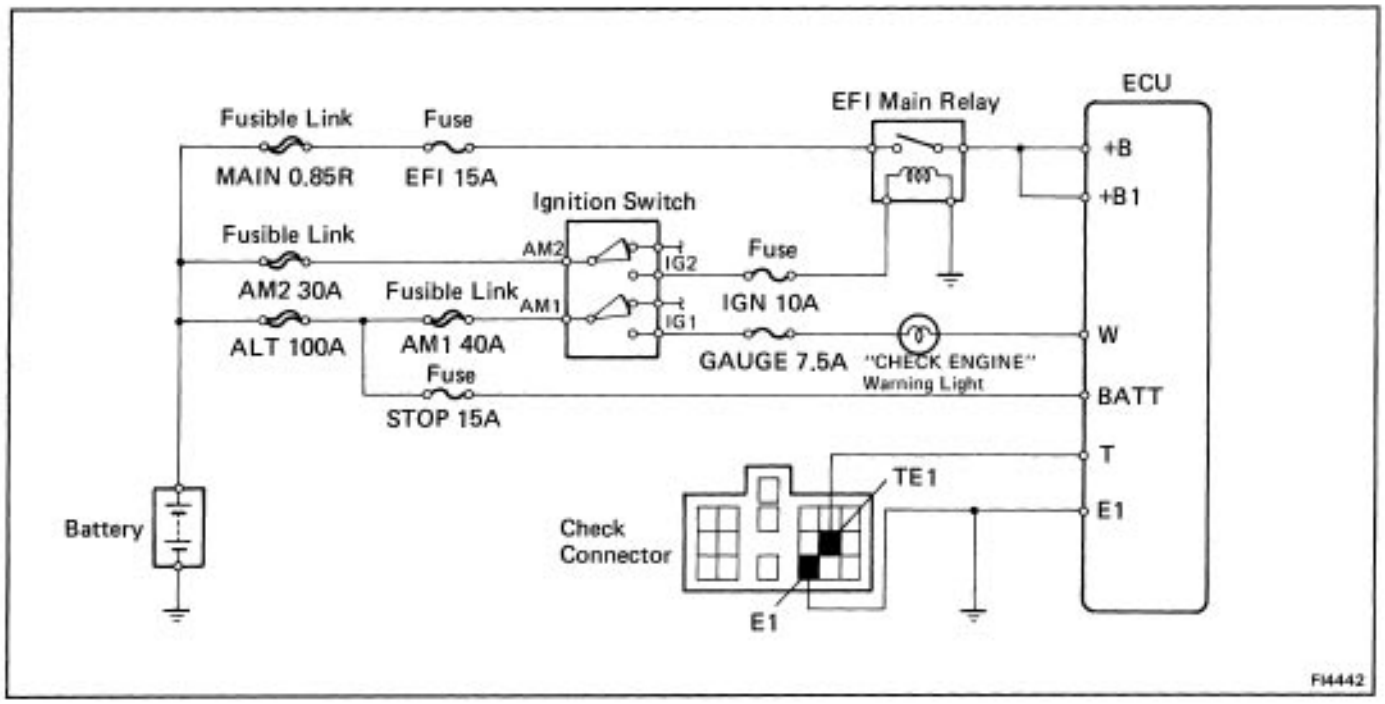

1.

Does "CHECK ENGINE" warning light come on when ignition switch is at ON?
- YES → System Normal.
- NO → Does "CHECK ENGINE" warning light come on when ECU terminal W is grounded to the body?
  - YES → Check wiring between ECU terminal E 1 and body ground.
    - OK → Try another ECU.
    - BAD → Repair or replace.
  - NO → Check bulb, fuse and wiring between ECU and ignition switch.
    - BAD → Repair or replace.

2.

Does"CHECK ENGINE" warning light go off when the engine is started?
- YES → System Normal.
- NO → Check wiring between ECU and " CHECK ENGINE" warning light.
  - BAD → Repair.
  - NO → Is there diagnostic code output when check connector terminals TE 1 and E 1 connected?
    - NO → Check wiring between ECU terminal T and check connector terminal TE1, and ECU terminal E 1 and check connector terminal E1.
      - OK → Try another ECU.
    - YES → Does–CHECK ENGINE" warning light go out after repair according to malfunction code?
      - NO → Further repair required.
      - YES → System OK
        - NO → Cancel out diagnostic code.

TROUBLESHOOTING WITH VOLT OHMMETER

PREPARATION FOR TROUBLESHOOTING

1. Remove the ECU cover under the center console.
2. Remove the ECU with the harness.

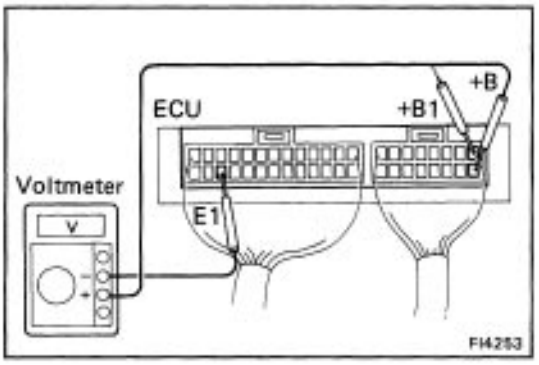

EFI SYSTEM CHECK PROCEDURE

HINT:

1. The EFI circuit can be checked by measuring the voltage at the wiring connectors of the ECU.
2. Perform all voltage measurements with the connectors connected.
3. Verify that the battery voltage is 11 V or above when the ignition switch is ON.
   Using a boltmeter with high–impedance (10 k/ /V minimum), measure the voltage at each terminal of the wiring connector.
   HINT: If there is any problem, see TROUBLESHOOTING EFI ELECTRONIC CIRCUIT WITH VOLT/OHMMETER.

Connectors of ECU

Symbol	Terminal	Symbol	Terminal	Symbol	Terminal
E01	Engine ground (Power)	IGT	Igniter	ACT	A/C amplifier
E02	Engine ground (Power)	IDL	Throttle position sensor	–	–
No. 10	Injector	THA	Intake air temp. sensor	–	–
No. 20	Injector	VCC	Vacuum sensor	–	–
STA	Starter switch	PIM	Vacuum sensor	*1 ELS	Electronic load signal
E1	Engine ground	PSW	Throttle position sensor	SPD	Speedometer sensor
OX	Oxygen sensor	THW	Water temp. sensor	FC	Circuit opening relay
–	–	E2	Sensor ground	A/C	A/C magnet clutch
G⊖	Crank angle sensor	*2 NSW	Neutral start switch	–	–
E21	Sensor ground	*3 O/D	O/D solenoid	–	–
G1	Crank angle sensor	*5 EGR	VSV (EGR)	BATT	Battery
NE	Engine revolution sensor	V-ISC	VSV (ISC valve)	W	Warning light
IGF	Igniter	T	Check connector	+B1	EFI main relay
*4 THG	EGR gas temp. sensor	VF	Check connector	+B	EFI main relay

*1 : 2WD M/T, *2 : A/T, *3 : 4A/T, *4: Calif., *5 : Calif. and 4WD

ECU Terminals

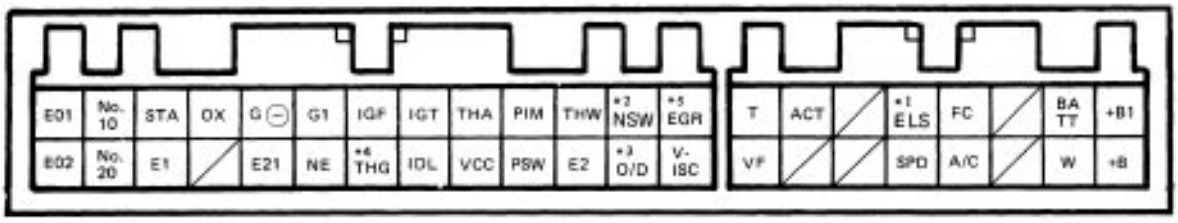

FI4266

Voltage at ECU wiring connectors

No.	Terminals	STD voltage (V)	Condition		See page
1	+B, +B1 — E1	10 — 14	Ignition switch ON		FI–31
2	BATT — E1	10 — 14	—		FI–32
3	IDL — E2	4.5 — 5.5	Ignition switch ON	Throttle valve open	FI–33
	PSW — E2			Throttle valve fully closed	
4	No. 10, No. 20 — E01, E02	10 — 14	Ignition switch ON		FI–34
5	W — E1	10 — 14	No trouble ("CHECK ENGINE" warning light off) and engine running		FI–35
6	PIM — E2	3.3 — 3.9	Ignition switch ON		FI–36
	VCC — E2	4.5 — 5.5			
7	THA — E2	2.0 — 2.5	Ignition switch ON	Intake air temp. 20°C (68°F)	FI–37
8	THW — E2	0.4 — 0.7		Coolant temp. 80°C (176°F)	FI–38
9	STA — E1	6 — 14	Cranking		FI–39
10	IGT — E1	0.7 — 1.0	Idling		FI–40
11	A/C — E1	5 — 14	Air conditioning ON		FI–41

ECU Terminals

*1: 2WD M/T, *2 : A/T, * 3: 4A/T, *4: Calif., *5 : Calif. and 4WD

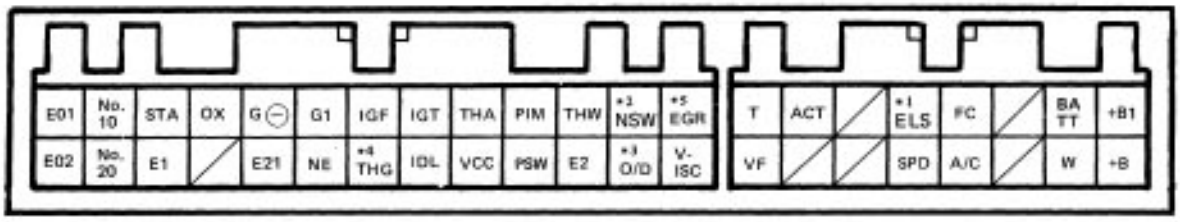

TROUBLESHOOTING EFI ELECTRONIC CIRCUIT WITH VOLT OHMMETER

HINT: The following troubleshooting procedures are designed for inspection of each separate systems, therefore, the procedure may vary some–what. However, troubleshooting should be performed while referring to the inspection methods described in this manual.
Before beginning inspection, it is best to first make a simple check of the fuses, fusible links and condition of the connectors.

The following troubleshooting procedures are based on the supposition that the trouble lies in either a short or open circuit in a component outside the computer or a short circuit within the computer. If engine occurs even through proper operating volt age is detected in the computer connector, then the computer is faulty and should be replaced.

LOCATION OF FUSED AND FUSIBLE LINKS

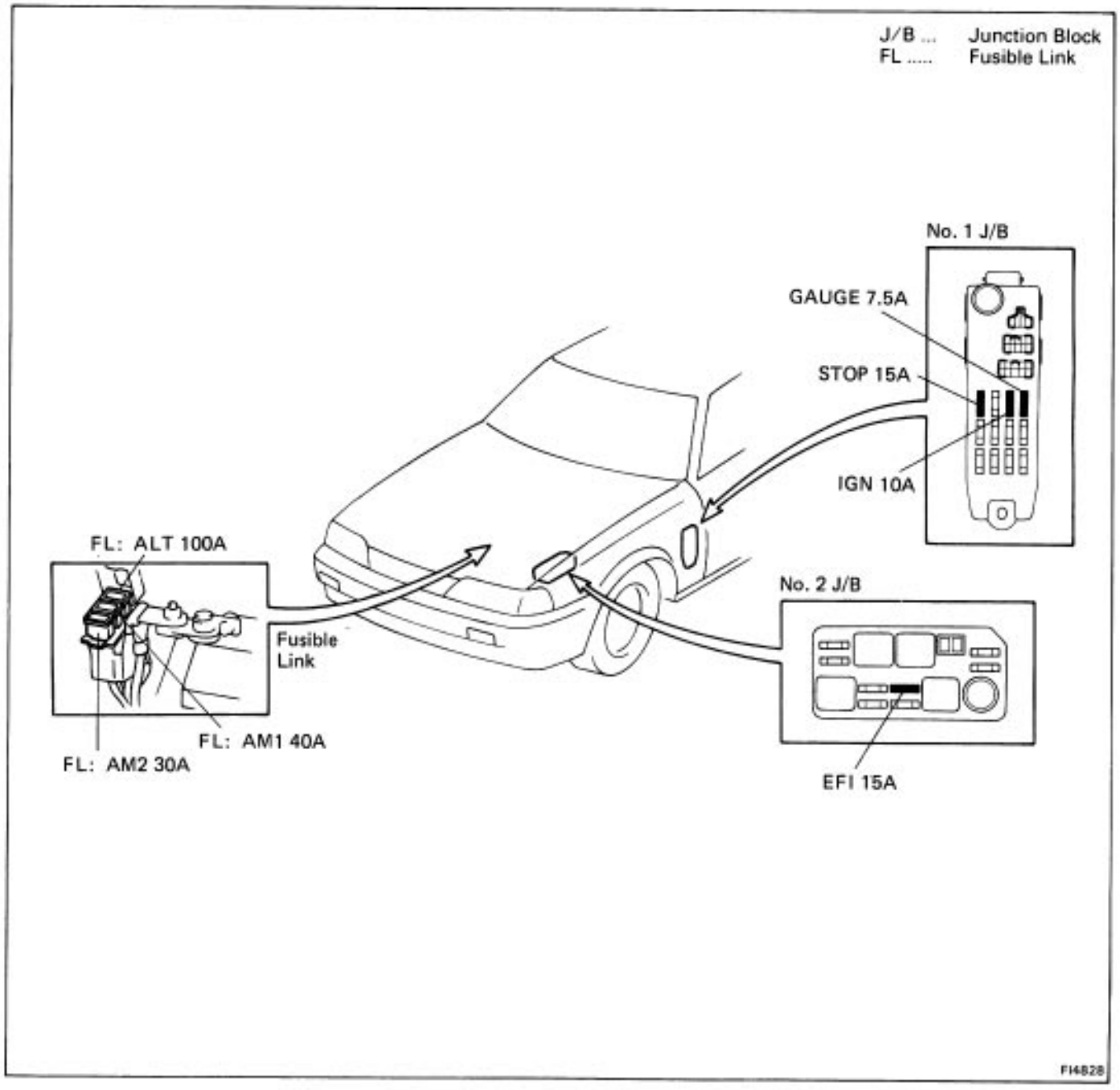

No.	Terminal	Trouble	Condition	STD voltage
1	+B +B1 – E1	No voltage	IG SW ON	10 – 14 V

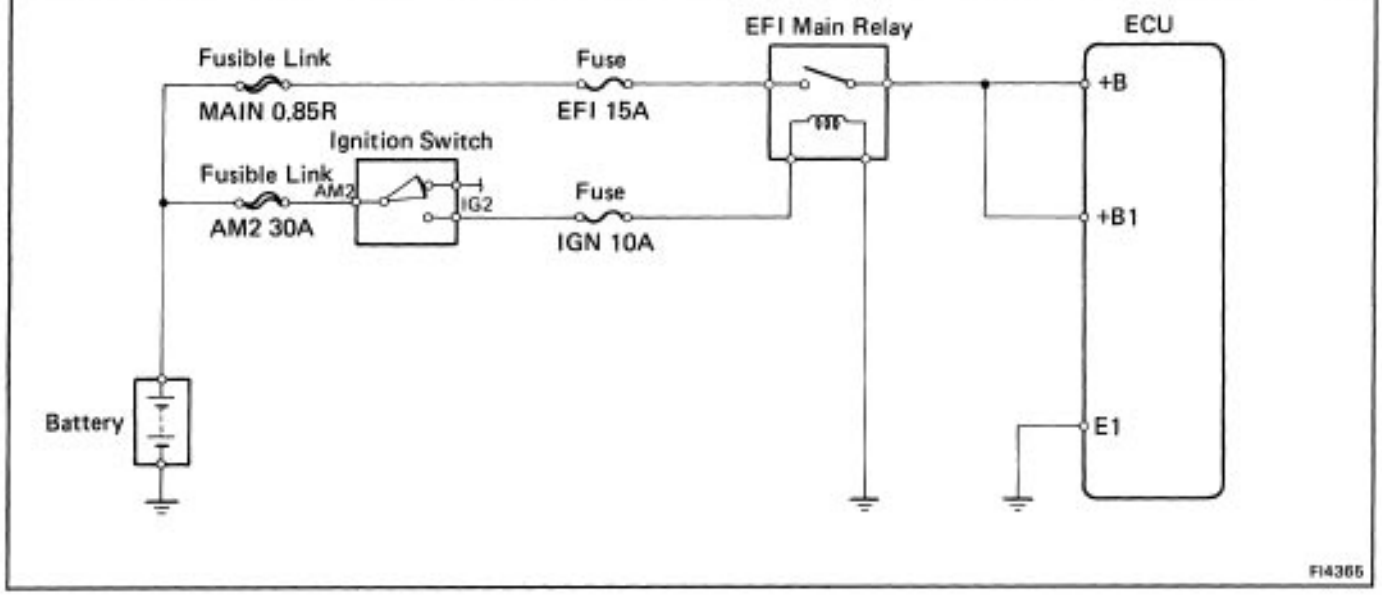

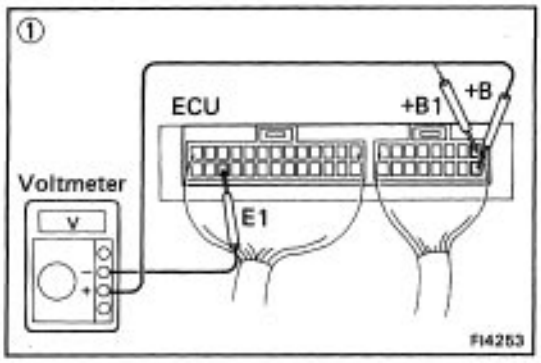

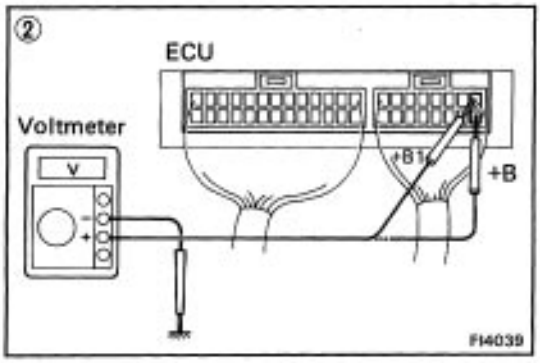

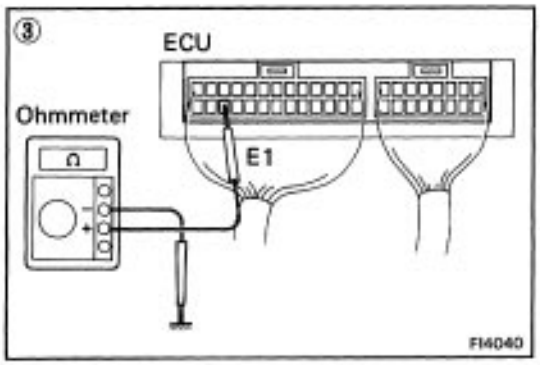

① There is no voltage between ECU terminals +B (+B1) and El. **(IG SW ON)**

② Check that there is voltage between ECU terminal +B (+B1) and body ground. **(IG SW ON)**

NO → ③ Check wiring between ECU terminal E 1 and body ground.
- OK → Try another ECU.
- BAD → Repair or replace.

OK → Check fuses, fusible links and ignition switch.
- BAD → Repair or replace.

OK → Check EFI main relay. (See page FI–70)
- BAD → Replace.

OK → Check wiring between EFI main relay and battery.
- BAD → Repair or replace.

No.	Terminal	Trouble	Condition	STD voltage
2	BATT – E1	No voltage	–	10 – 14 V

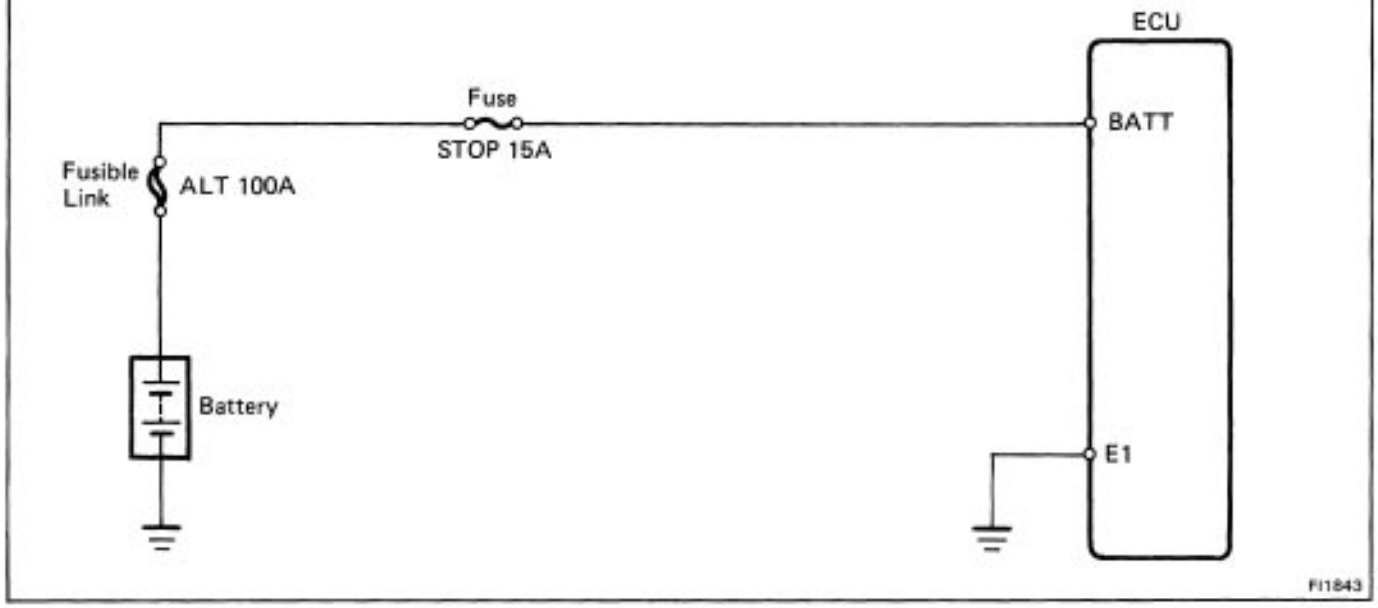

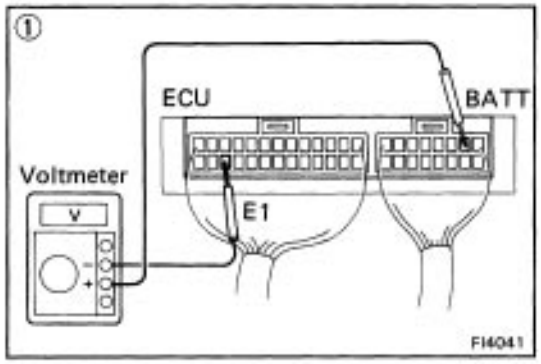

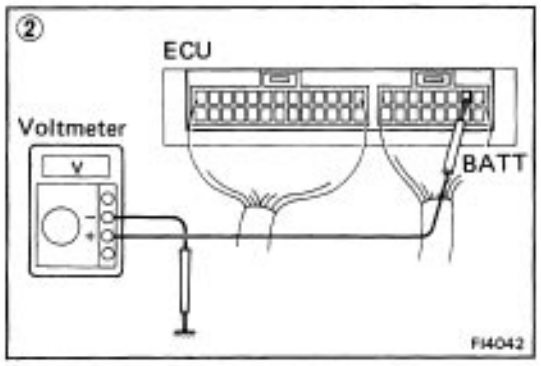

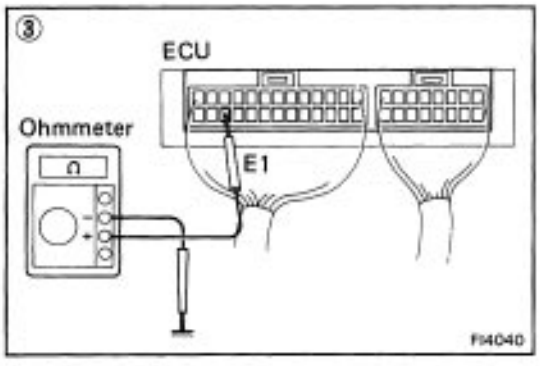

① There is no voltage between ECU terminals BATT and El.

② Check that there is voltage between ECU terminal BATT and body ground.

NO → Check fuse and fusible link.
- BAD → Replace.
- OK → Check wiring between ECU terminal and battery.
  - BAD → Repair or replace.

OK → (3) Check wiring between ECU terminal E1 and body ground.
- OK → Try another ECU.
- BAD → Repair or replace.

No.	Terminal	Trouble	Condition		STD voltage
3	IDL – E2	No voltage	IG SW ON	Throttle valve open	4.5 – 5.5 V
	PSW – E2			Throttle valve fully closed	4.5 – 5.5 V

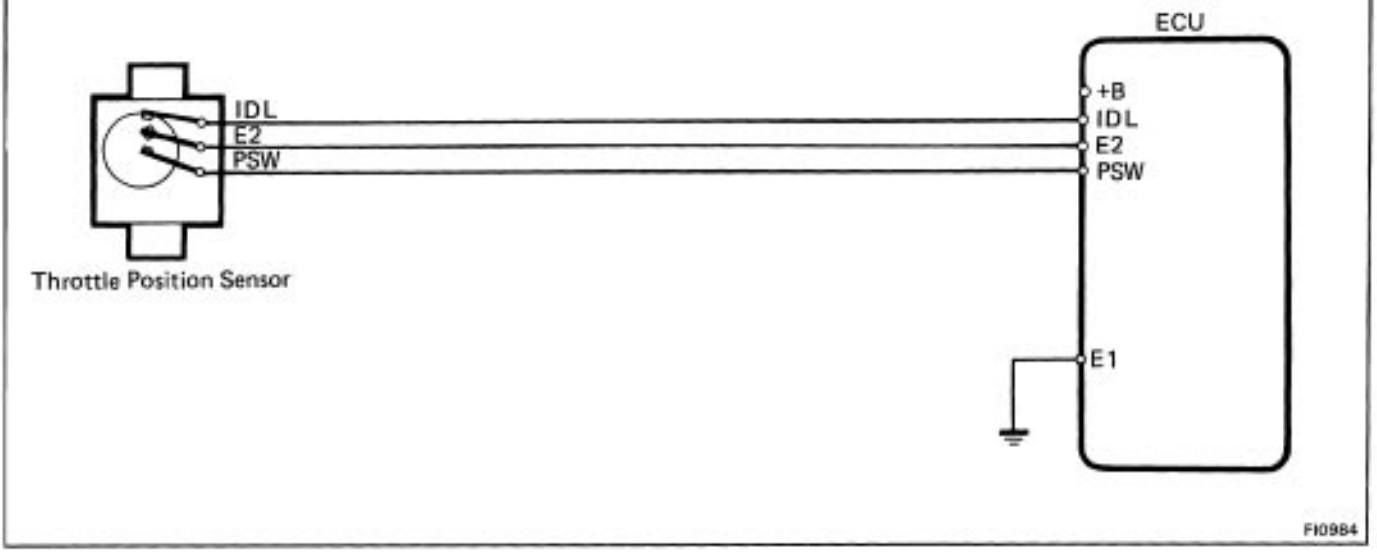

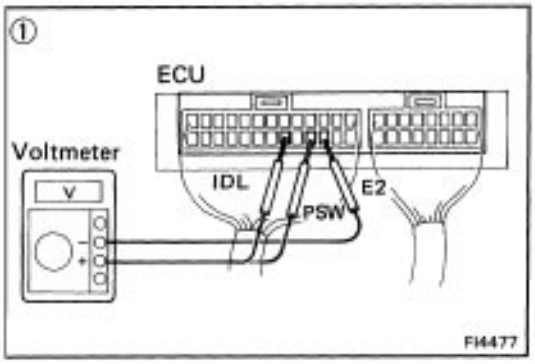

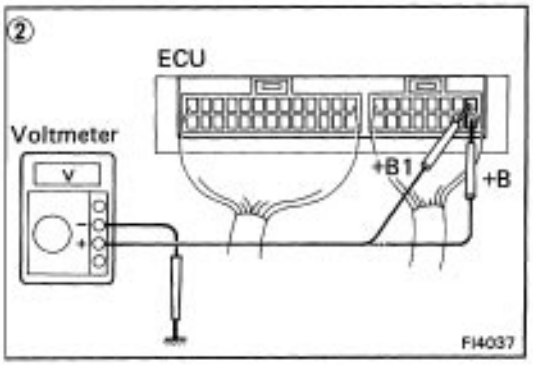

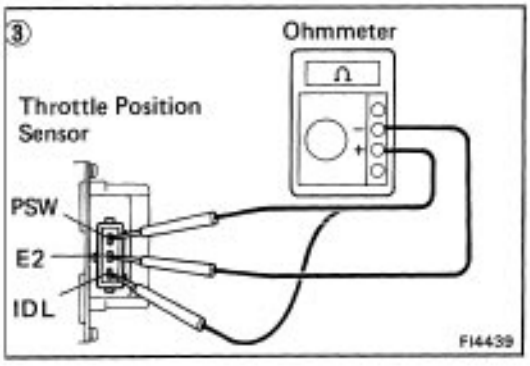

① There is no voltage between ECU terminals IDL and E2 (E21). **(IG SW ON)** (Throttle valve open)

② Check that there is voltage between ECU terminal +B (+B1) and body ground. **(IG SW ON)**

NO → OK

Check wiring between ECU terminal E 1 and body ground.

OK → Try another ECU.

BAD → Repair or replace.

Refer to +B – E1 trouble section. (No. 1) (See page FI–31)

BAD → Repair or replace.

OK

③ Check throttle position sensor. (See page FI–64)

BAD → Replace or repair throttle position sensor.

OK → Check wiring between ECU and throttle position sensor.

BAD → Repair or replace.

OK → Try another ECU.

No.	Terminal	Trouble	Condition	STD voltage
4	No.10 – E01 No.20 – E02	No voltage	Ignition switch ON	10 – 14 V

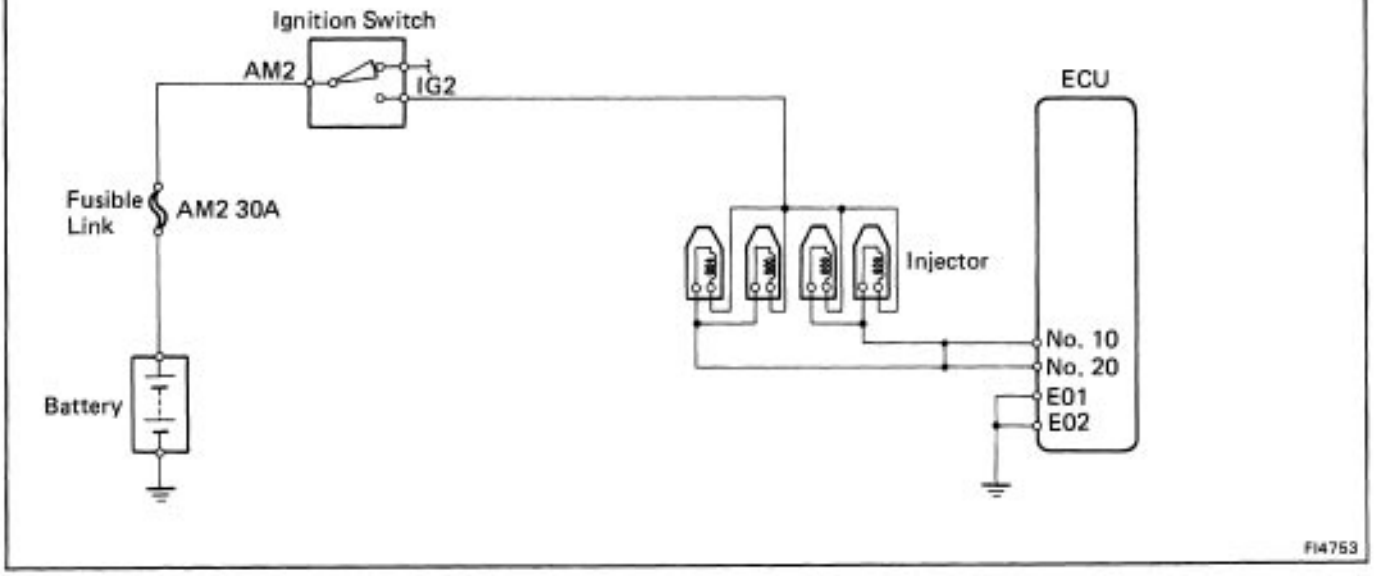

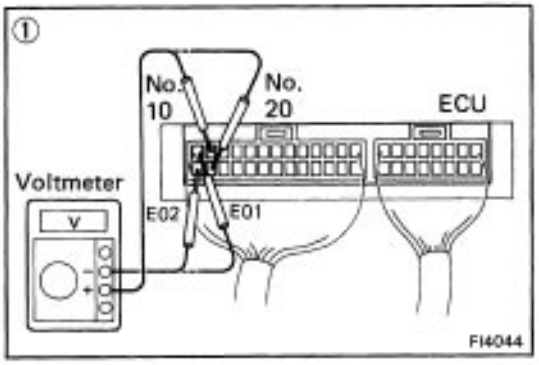

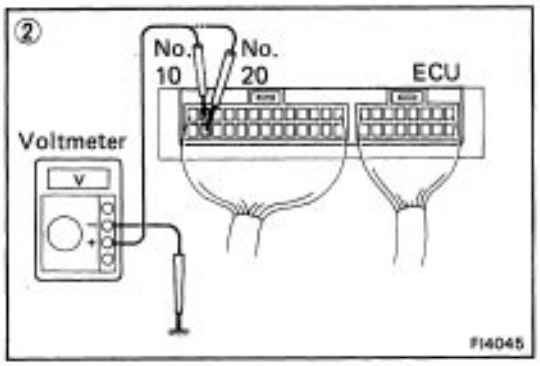

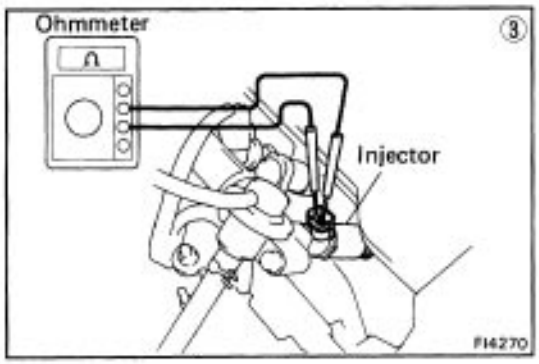

① There is no voltage between ECU terminals No. 10 and/or No. 20 and E01 and/or E02. **(IG SW ON)**

② Check that there is voltage between ECU terminal No. 10 and/or No. 20 and body ground.

NO

OK

Check wiring between ECU terminal E01 and/or E02 and body ground.

OK

Try another ECU.

BAD

Repair or replace.

Check fuse, fusible link, ignition switch.

BAD

Repair or replace.

OK

BAD

③ Check resistance of magnetic coil in each injector.
STD resistance: Approx. 13.8Ω

OK

BAD

Replace injector.

Check wiring between ECU terminal No. 10 and/or No. 20 and battery.

BAD

Repair or replace.

No.	Terminal	Trouble	Condition	STD voltage
5	W – E1	No voltage	No trouble (”CHECK ENGINE” warning light off) and engine running	10 – 14 V

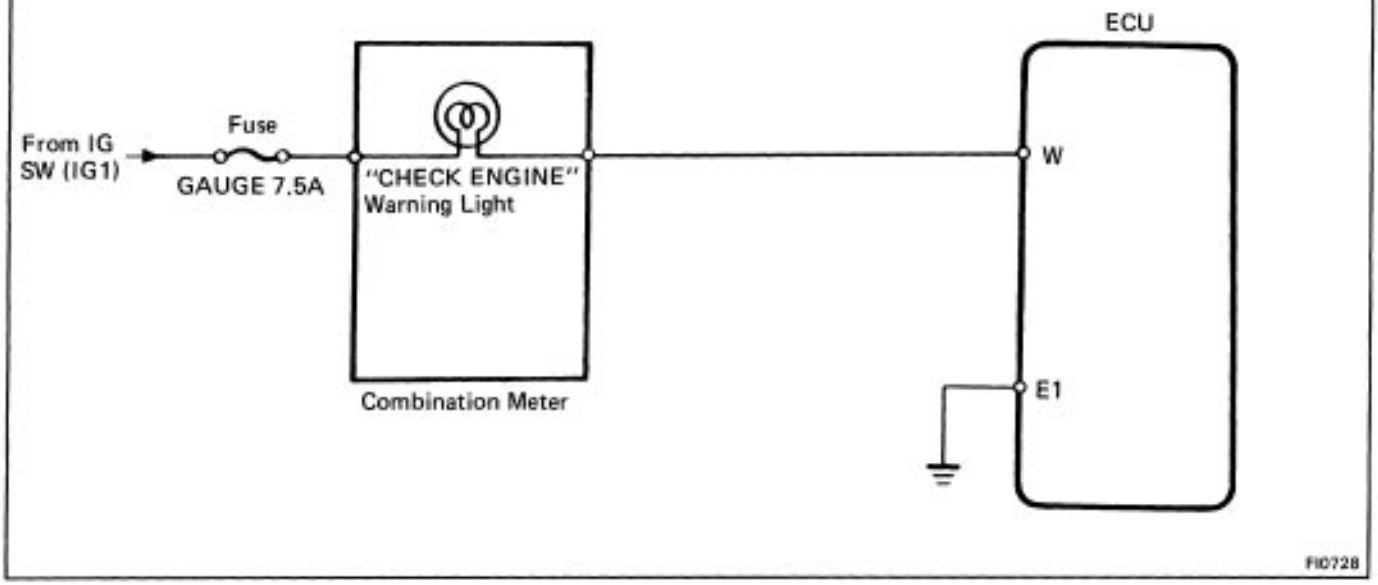

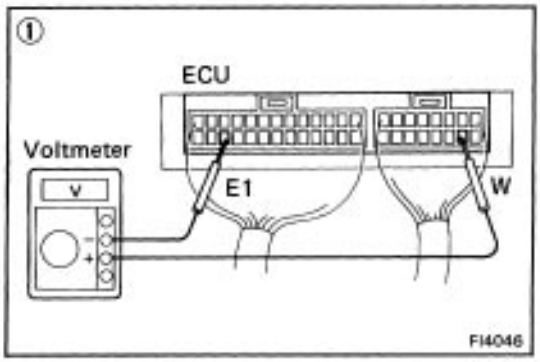

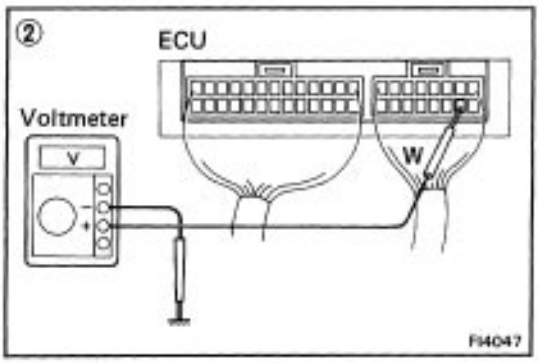

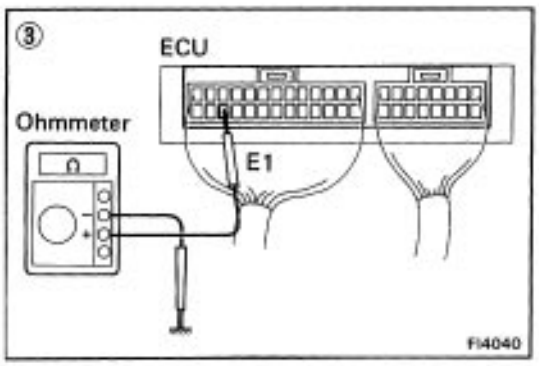

① There is no between ECU terminals W and El. **(Idling)**

② Check that there is voltage between ECU terminal W and body ground.

NO

OK

③ Check wiring between ECU terminal E 1 and body ground.

OK

Try another ECU.

BAD

Repair or replace.

Check GAUGE fuse and ”CHECK ENGINE” warning light.

OK

BAD

Repair or replace.

Fuse blows again

Check wiring between ECU terminal W and fuse.

BAD

Repair– or replace.

No.	Terminal	Trouble	Condition	STD voltage
6	PIM – E2	No voltage	IG SW ON	3.3 – 3.9 V
	VCC – E2			4.5 – 5.5 V

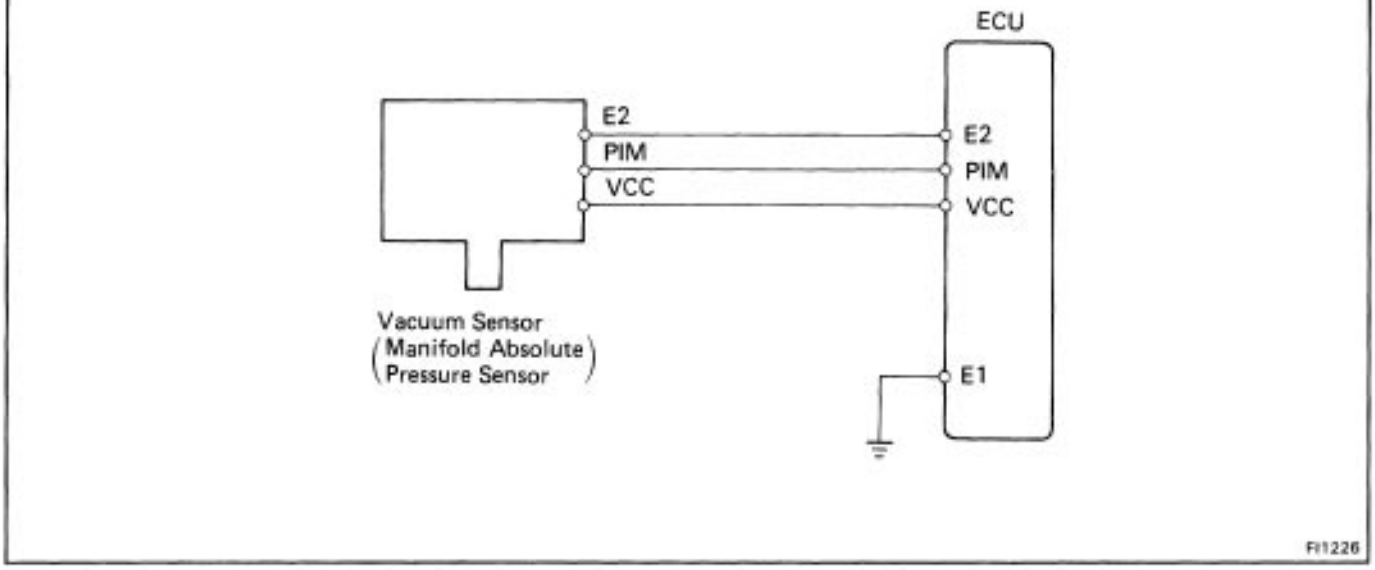

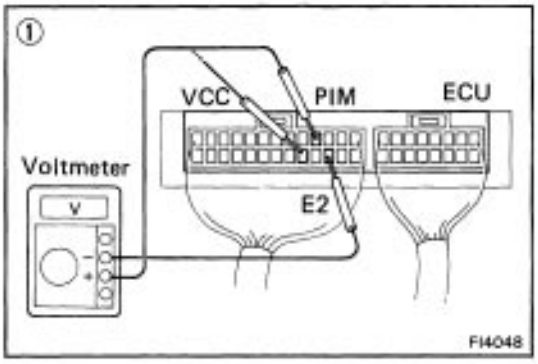

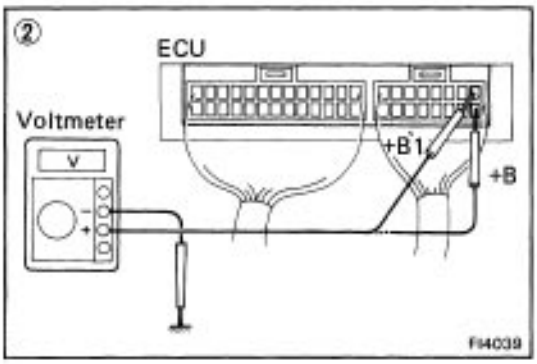

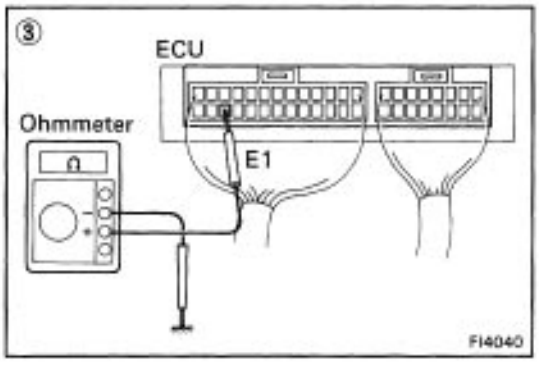

① There is no voltage between ECU terminals PIM or VCC and E2. **(IG SW ON)**

↓

② Check that there is voltage between ECU terminal +B (+B1) and body ground. **(IG SW ON)**

OK → ↓

NO → Refer to +B – E1 trouble section (No. 1). (See page FI–31)

↓

③ Check wiring between ECU terminal E1 and body ground.

OK → ↓

BAD → Repair or replace.

Check vacuum sensor. (See page FI–74)

BAD → Replace vacuum sensor.

OK → ↓

Check wiring between ECU and vacuum sensor.

OK → ↓

BAD → Repair or replace.

Try another ECU.

No.	Terminal	Trouble	Condition		STD voltage
7	THA – E2	No voltage	IG SW ON	Intake air temperature 20°C (68°F)	2.0 – 2.5 V

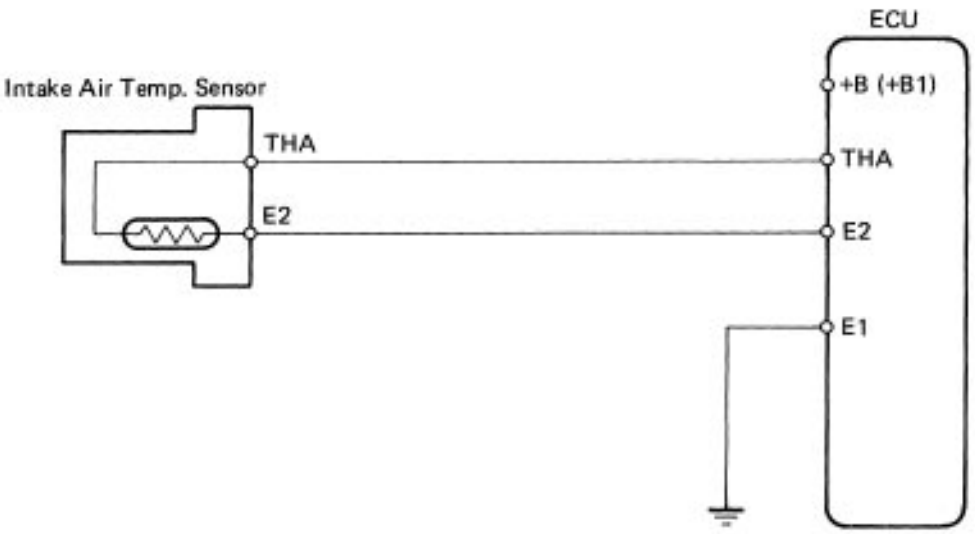

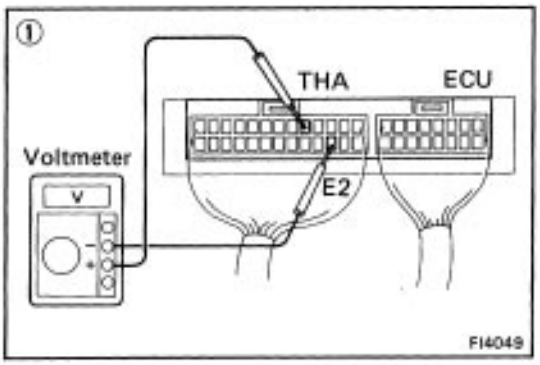

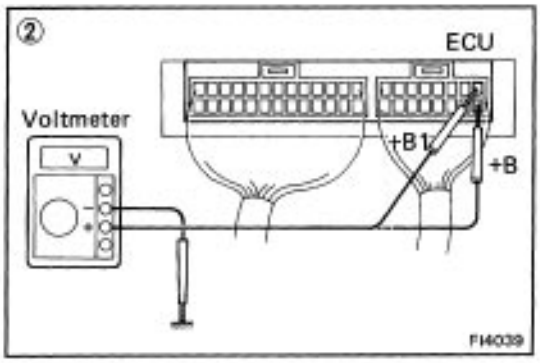

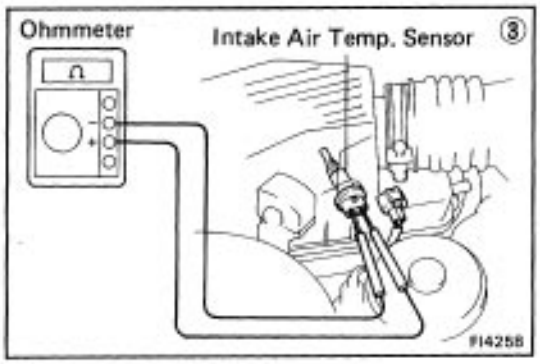

① There is no voltage between ECU terminals THA and E2. **(IG SW ON)**

② Check that there is voltage between ECU terminal +13 (+131) and body ground. **(IG SW ON)**

OK → Check wiring between ECU terminal E 1 and body ground.

NO → Refer to +13 – E 1 trouble section (No. 1). (See page FI–31)

OK → ③ Check intake air temp. sensor. (See page FI–75)

BAD → Repair or replace.

BAD → Replace intake air temp. sensor.

OK → Check wiring between ECU and intake temp. sensor.

OK → Try another ECU.

BAD → Repair or replace wiring.

No.	Terminal	Trouble	Condition		STD voltage
8	THW – E2	No voltage	IG SW ON	Coolant temperature 80°C (176°F)	0.4 – 0.7 V

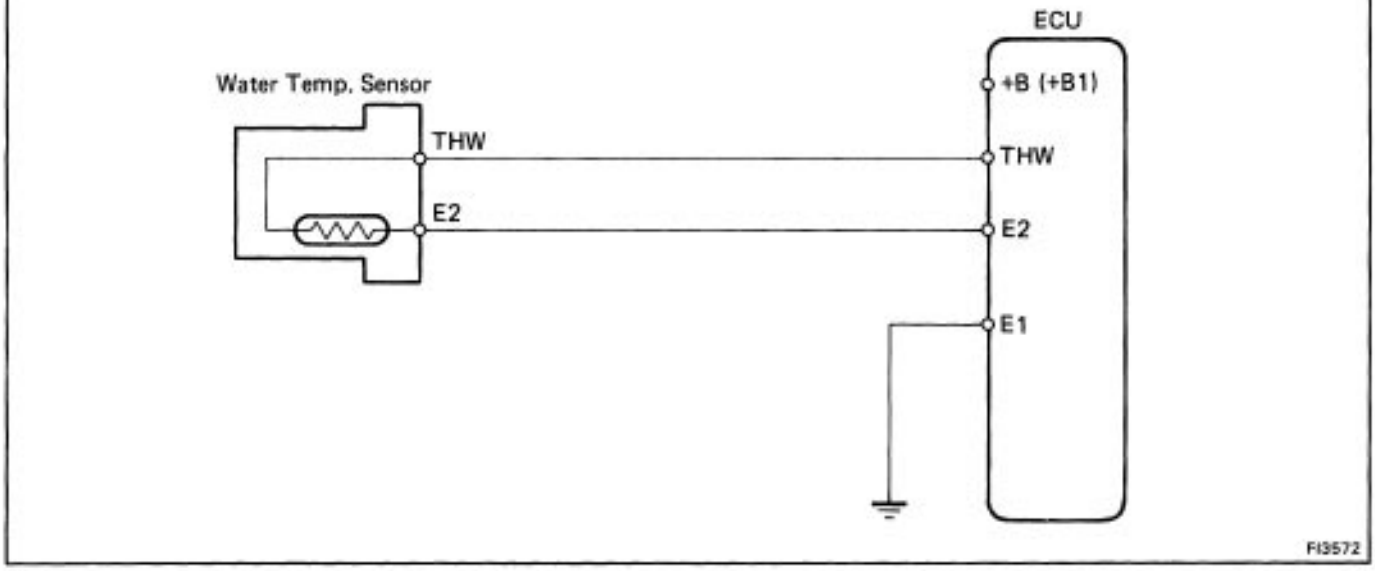

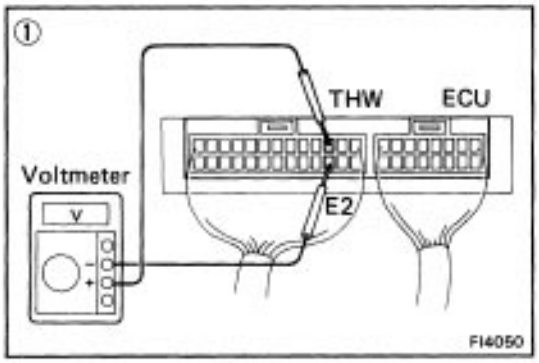

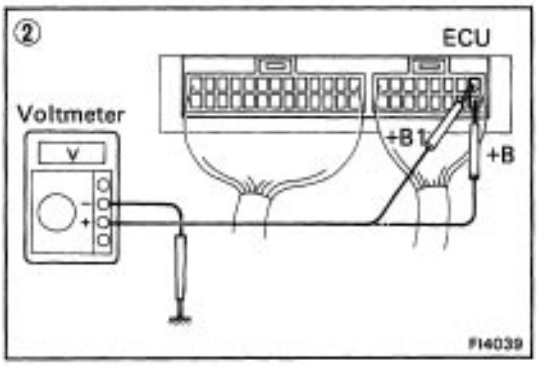

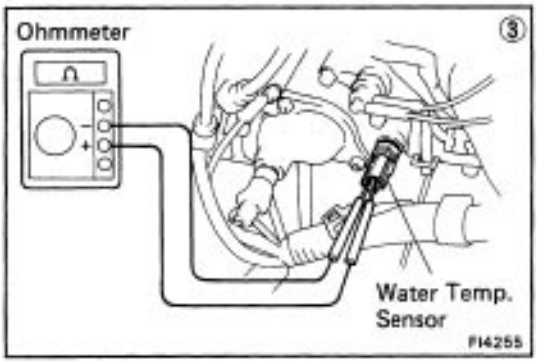

① There is no voltage between ECU terminals THW and E2. **(IG SW ON)**

② Check that there is voltage between ECU terminal +B (+B1) and body ground. **(IG SW ON)**

OK → Check wiring between ECU terminal E1 and body ground.

NO → Refer to +B – E 1 trouble section (No. 1) (See page FI–31)

Check wiring between ECU terminal E1 and body ground.

OK → ③ Check water temp. sensor. (See pages FI–73)

BAD → Repair or replace.

③ Check water temp. sensor. (See pages FI–73)

BAD → Replace water temp. sensor.

OK → Check wiring between ECU and water temp. sensor.

Check wiring between ECU and water temp. sensor.

OK → Try another ECU.

BAD → Repair or replace.

No.	Terminal	Trouble	Condition	STD voltage
9	STA – E1	No voltage	Cranking	6 – 14 V

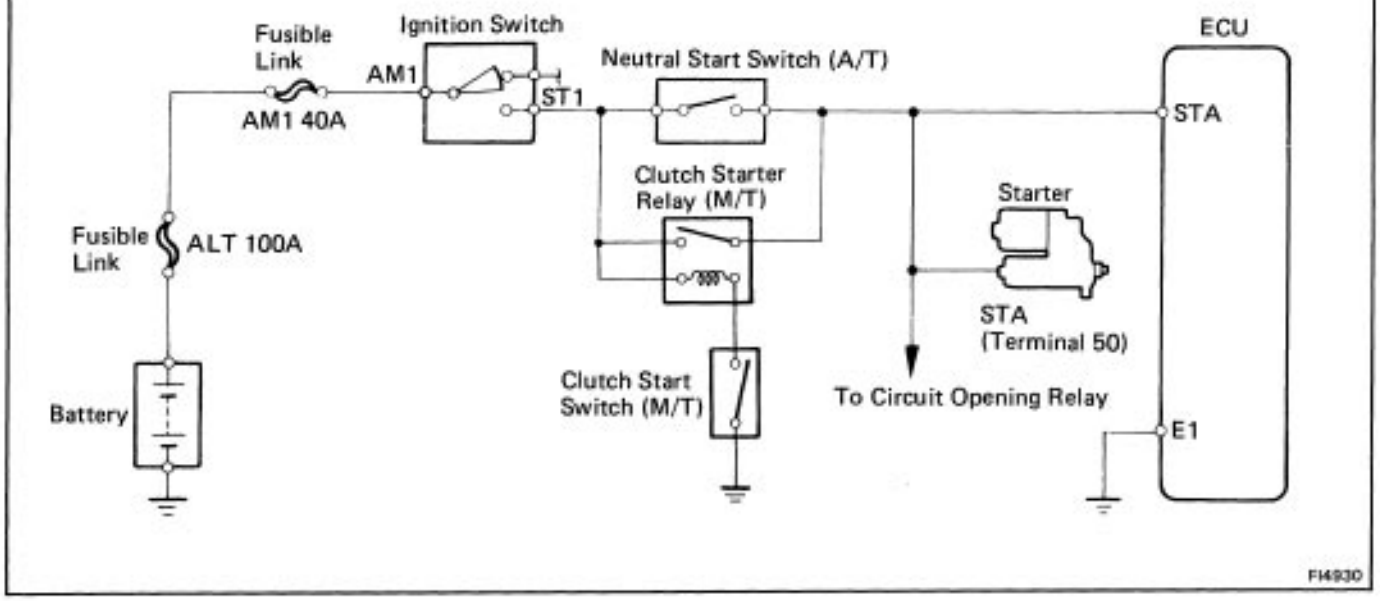

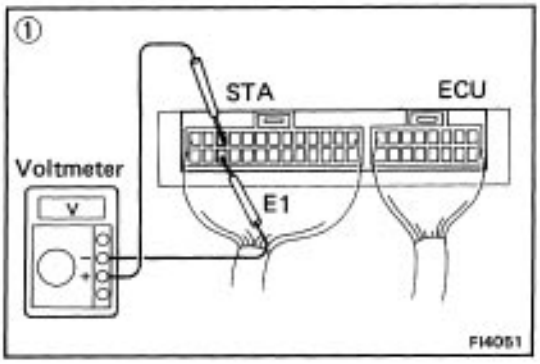

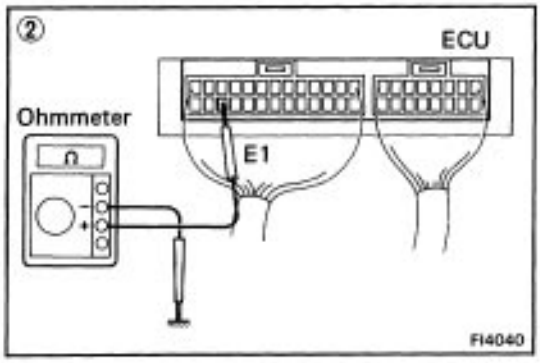

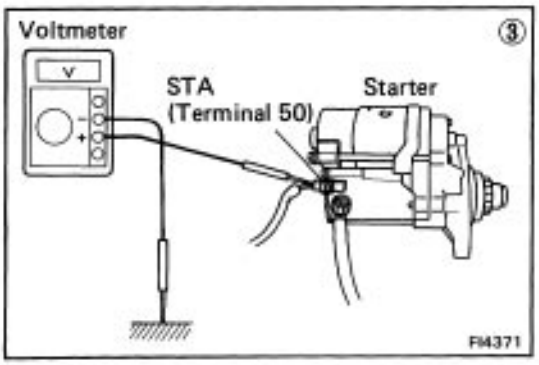

① There is no voltage between ECU terminals STA and E 1. **(IG SW START)**

Check starter operation. — OK → Check wiring between ECU terminal STA and ignition switch terminal ST1.

- BAD → Check fusible link, battery, wiring and ignition switch. — BAD → Repair or replace.
- OK → ② Check wiring between ECU terminal E1 and body ground.
  - OK → Try another ECU.
  - BAD → Repair or replace.
- BAD → Repair or replace. ,

Check fusible link, battery, wiring and ignition switch. — OK → ② Check that there is voltage at STA (50) terminal of starter. **(IG SW START) STD voltage: 6 – 14 V**

- OK → Check starter
- NO → Check wiring between ignition switch terminal ST1 and starter terminal STA (50).

No.	Terminal	Trouble	Condition	STD voltage
10	IGT – E1	No voltage	Idling	0.7 – 1.0 V

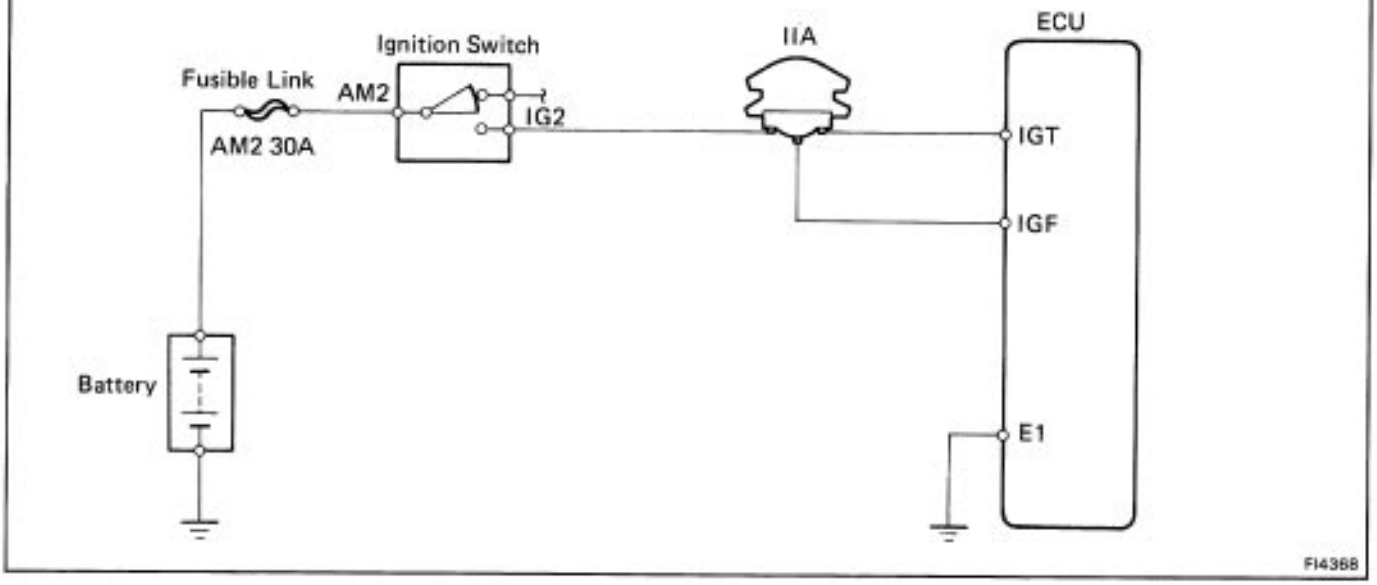

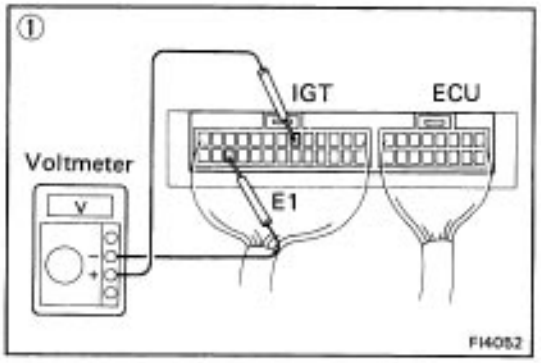

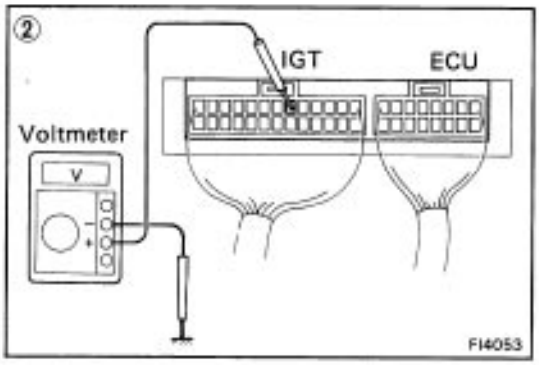

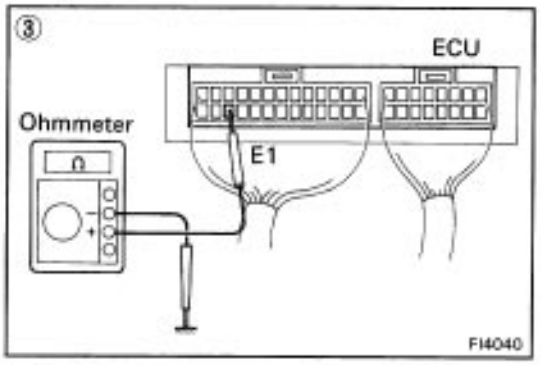

① There is no voltage between ECU terminals IGT and EI. **(Idling)**

② Check that there is voltage between ECU terminal IGT and body ground. **(Idling)**

NO → ③ Check wiring between ECU terminal E1 and body ground. BAD → Repair or replace.

③ OK → Try another ECU.

② OK → Check fusible links and ignition switch. BAD → Repair or replace.

OK → Check IIA. BAD → Repair or replace.

OK → Check wiring between ECU and battery. BAD → Repair or replace.

OK → Check igniter. BAD → Repair or replace.

No.	Terminal	Trouble	Condition	STD voltage
11	A/C – E1	No voltage	Air conditioning ON	5 – 14 V

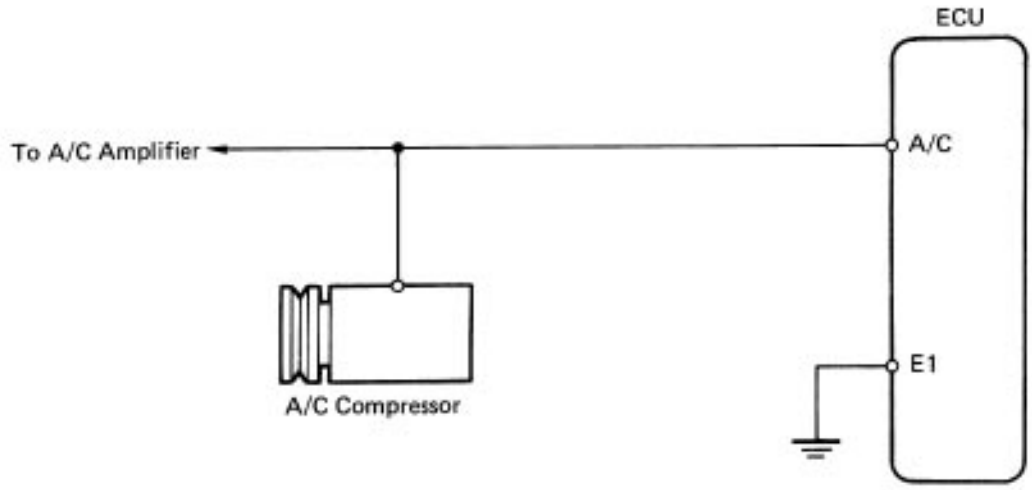

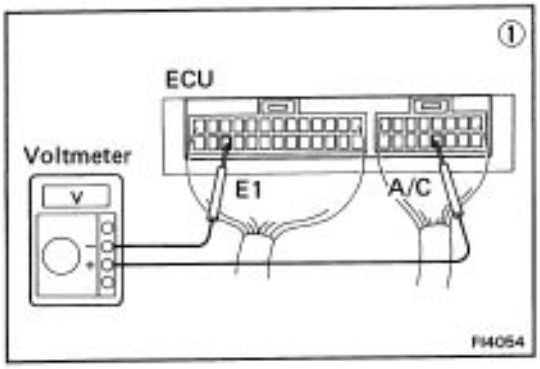

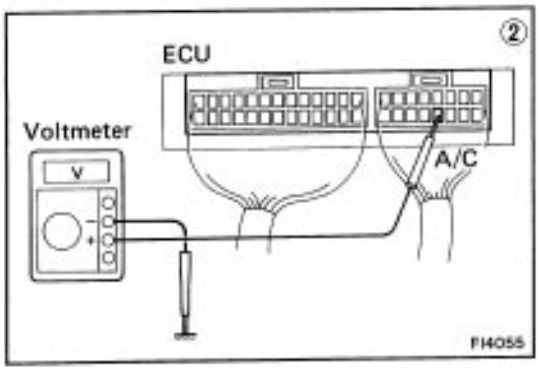

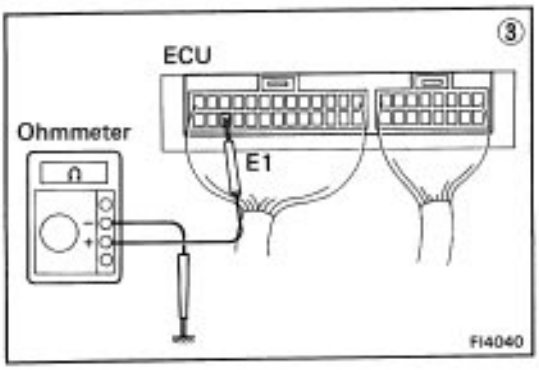

① There is no voltage between ECU terminals A/C and E1. **(Air conditioning ON)**

② Check that there is voltage between ECU terminal A/C and body ground.

NO → OK

③ Check wiring between ECU terminal E1 and body ground.

OK → Try another ECU.

BAD → Repair or replace.

Check compressor running.

OK → Check wiring between ECU terminal A/C and Amplifier.

BAD → Repair– or replace.

BAD

Check that there is voltage between amplifier terminal and body ground.

BAD → Repair or replace.

OK

Check wiring between amplifier and ECU or compressor.

BAD → Repair or replace.

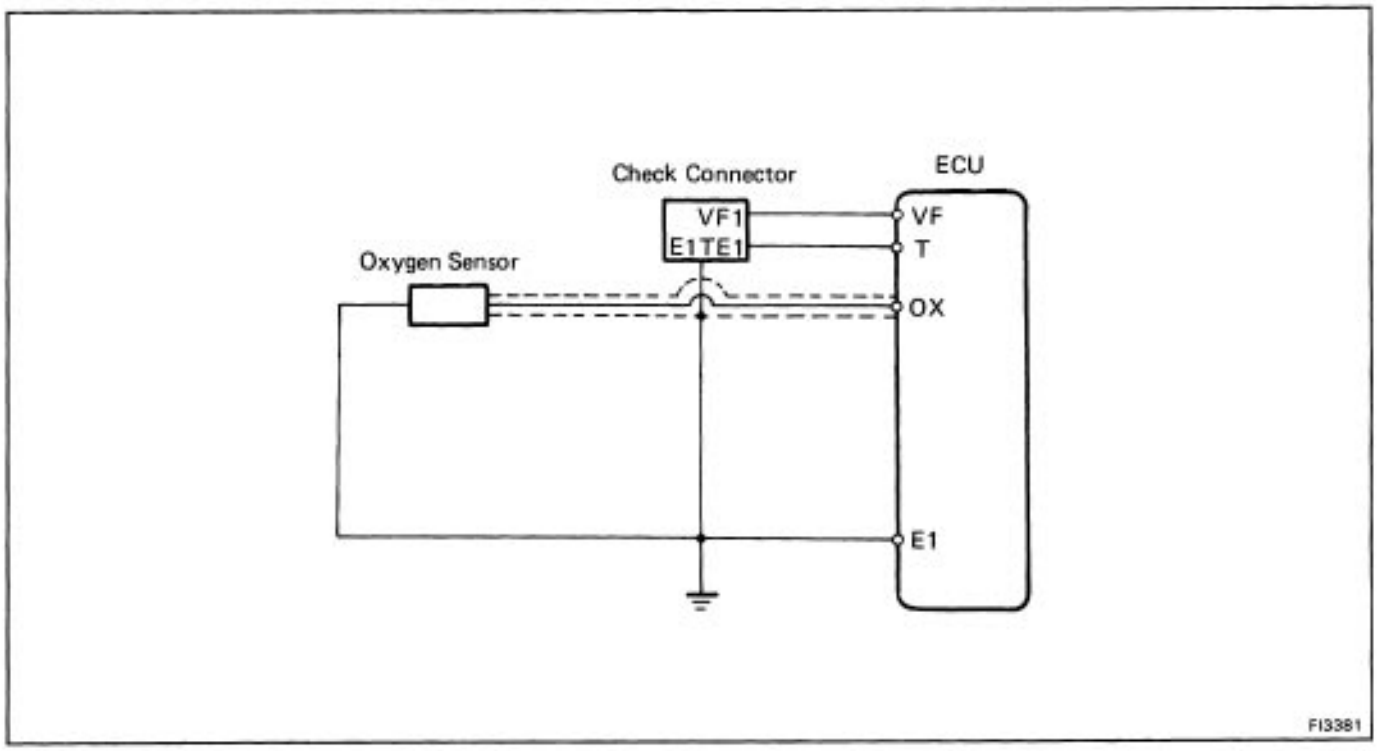

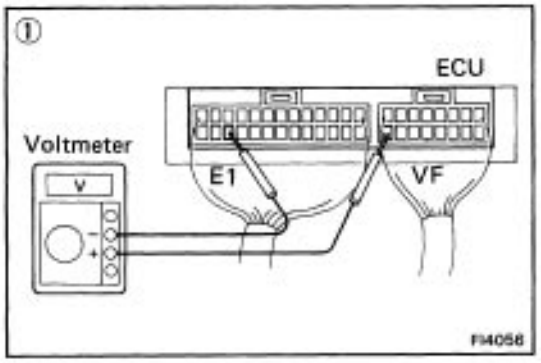

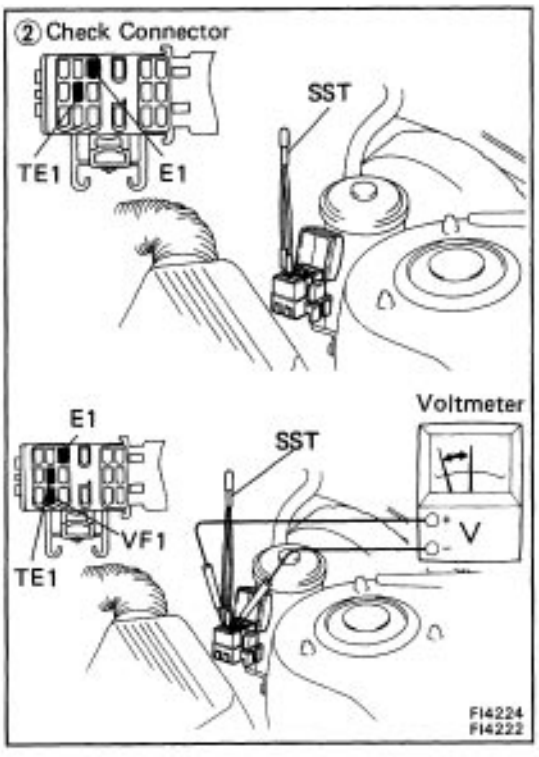

① There is no voltage between ECU terminals VF and E1.

Check that there is voltage between ECU terminal VF and body ground.

NO → OK

Check wiring between ECU terminal E1 and body ground.

OK → Try another ECU.

BAD → Repair or replace.

Is air leaking into air intake system? BAD → Repair air leak.

OK

Check spark plugs. BAD → Repair or replace.

OK

Check IIA and ignition system. BAD → Repair or replace.

OK

Check fuel pressure. BAD → Repair or replace.

OK

Check injector. BAD → Repair or replace.

OK

Check cold start injector.* BAD → Repair or replace.

OK

Check vacuum sensor. BAD → Repair or replace.

OK

② Check operation of oxygen sensor. OK → System normal.

OK

Check wiring between oxygen sensor and ECU connector. BAD → Repair wiring.

OK

Replace oxygen sensor.

* Rich malfunction only

California

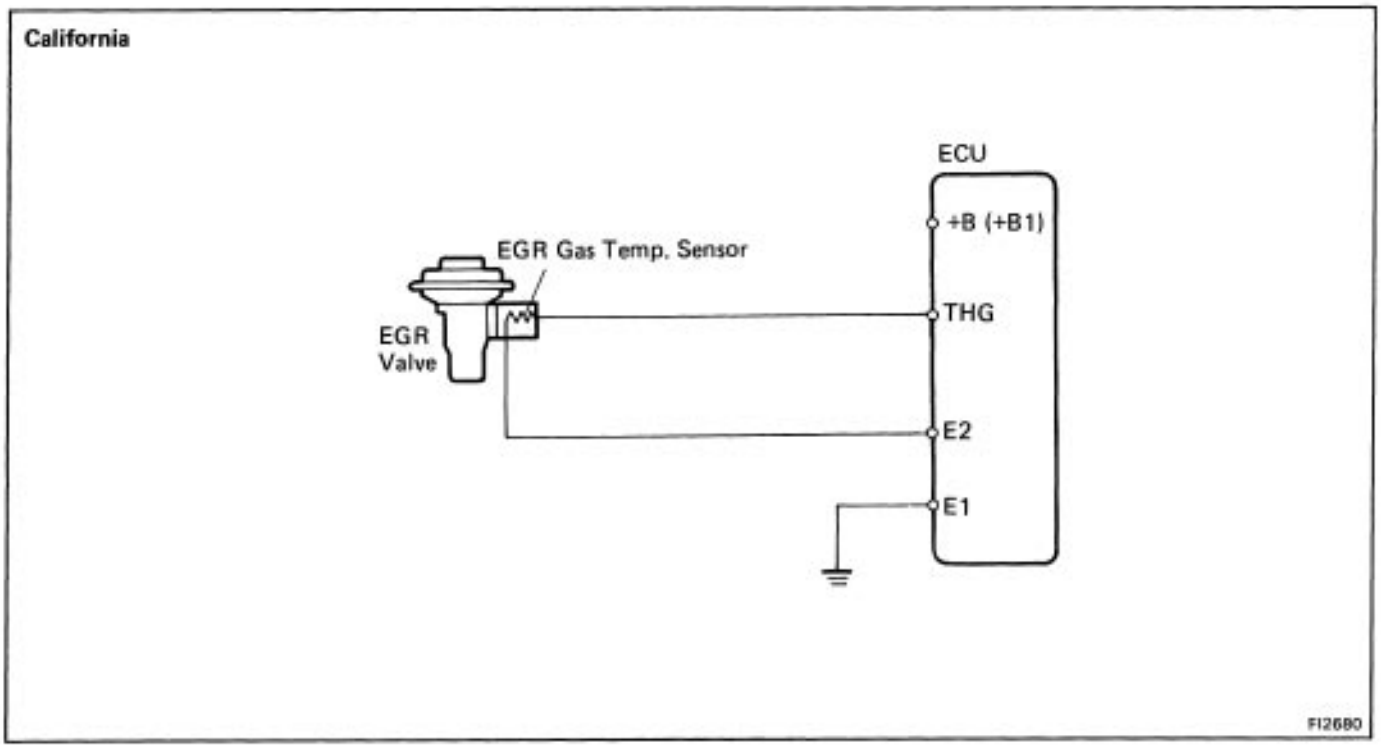

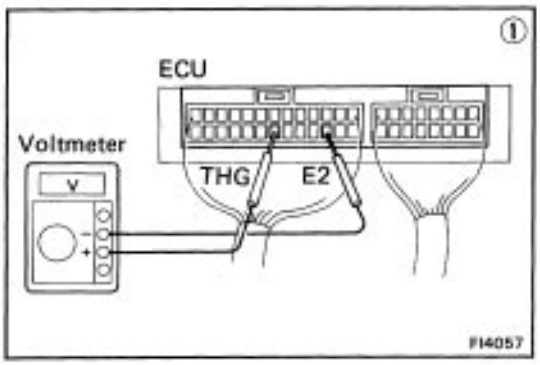

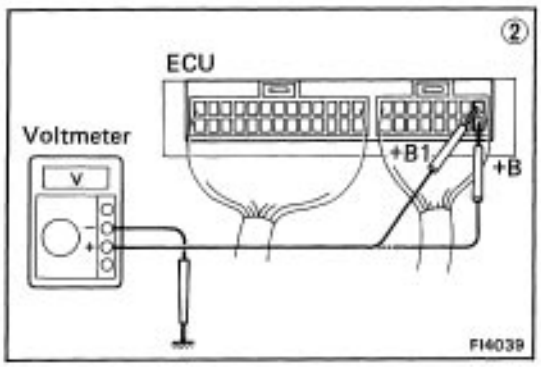

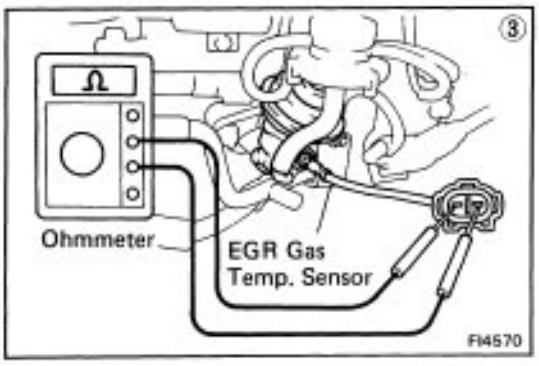

① There is no voltage between ECU terminals THG and E2. **(IG SW ON)**

② Check that there is voltage between ECU terminal +B (+B1) and body ground. **(IG SW ON)**

OK → Check wiring between ECU terminal E1 and body ground.

NO → Refer to +B – E1 trouble section (No.1) (See page FI–31)

OK → Check EGR system.

BAD → Repair or replace.

OK → ③ Check EGR gas temp. sensor.

BAD → Replace EGR gas temp. sensor.

OK → Check wiring between ECU and EGR. gas temp. sensor.

OK → Try another ECU.

BAD → Repair or replace.

FUEL SYSTEM

Fuel Pump

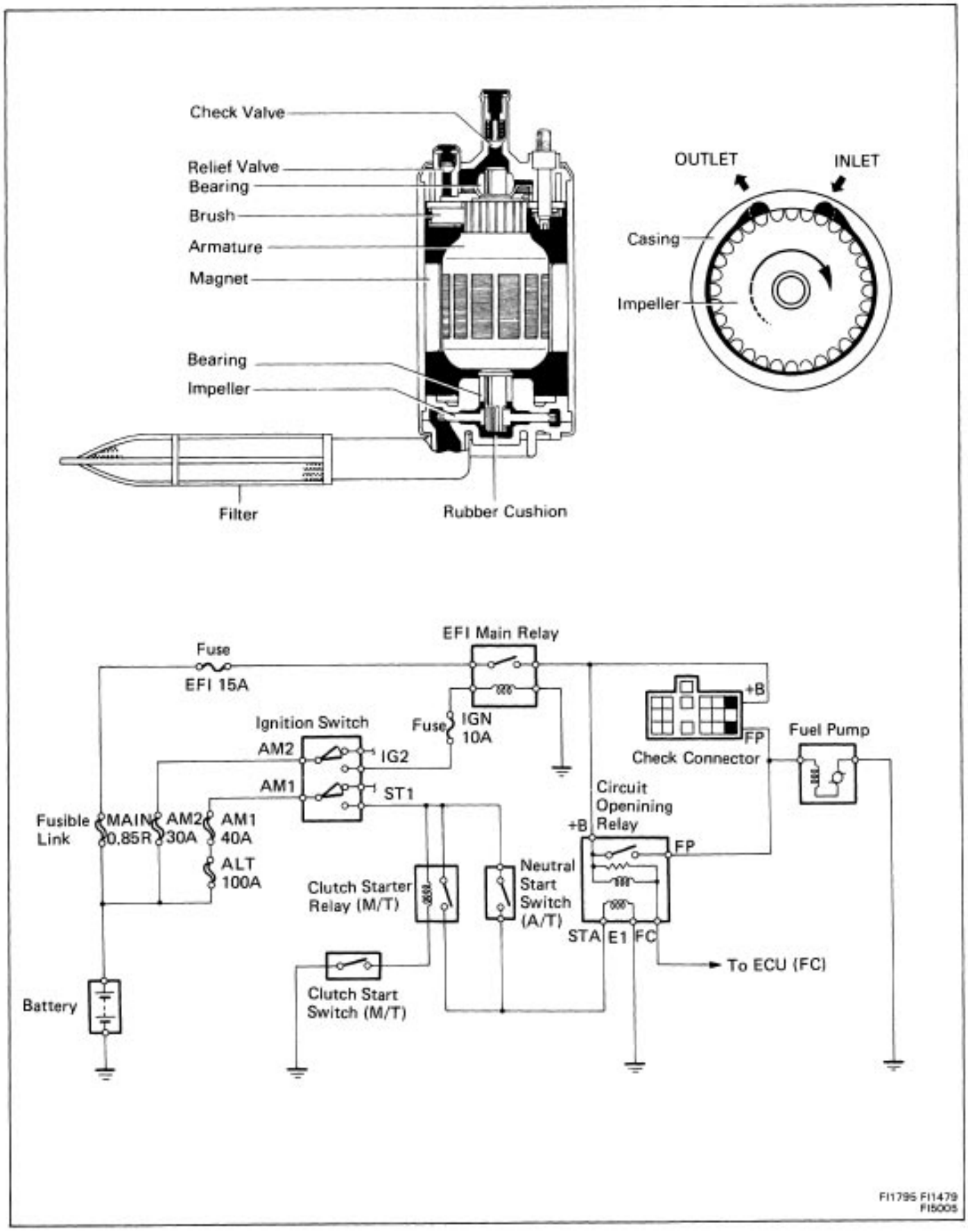

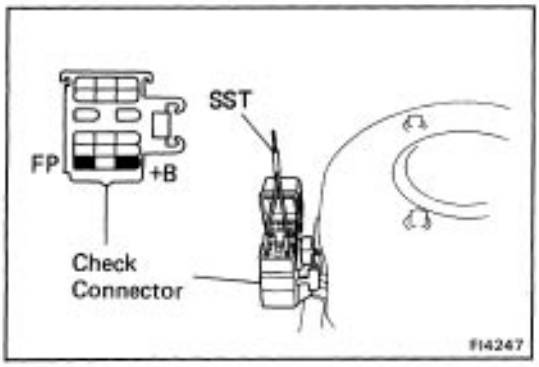

ON–VEHICLE INSPECTION

1. CHECK FUEL PUMP OPERATION

(a) Turn the ignition switch to ON.

NOTICE: Do not start the engine.

(b) Using SST, connect the terminals + B and FP of the check connector.
SST 09843–18020

HINT: The check connector is located near the air cleaner.

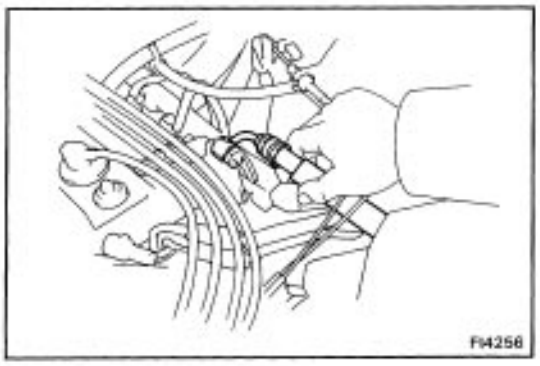

(c) Check that there is pressure in the hose from the fuel filter.
HINT: At this time, you will hear fuel pressure noise.

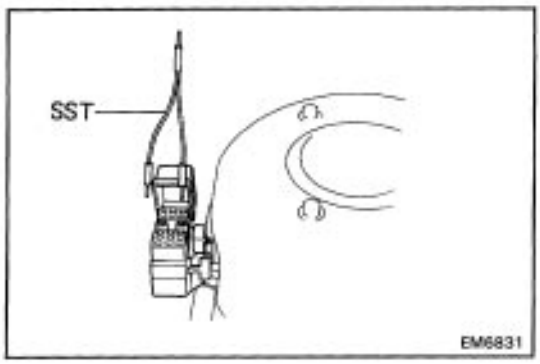

(d) Remove SST from the check connector.

(e) Turn the ignition switch to OFF.

If there is pressure, check the following parts.

- Fusible link (0.85R, AM2 30A)
- Fuse (EFI 15A, IGN 10A)
- EFI main relay
- Circuit opening relay
- Fuel pump
- Wiring connections

2. CHECK FUEL PRESSURE

(a) Check that battery voltage is approx. 12 V

(b) Disconnect the battery ground cable.

(c) Disconnect the wiring connector from the cold start injector.

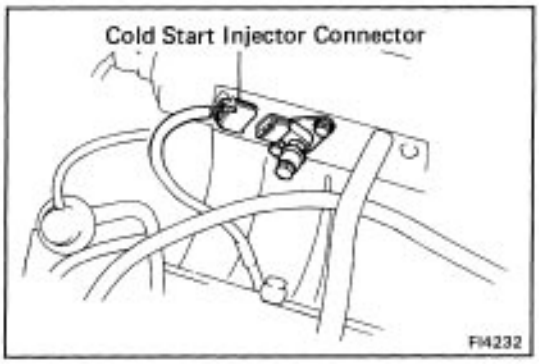

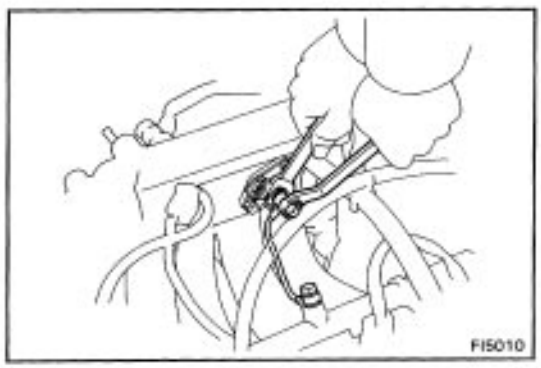

(d) Place a suitable container of shop towel under the cold start injector pipe.

(e) Slowly loosen the union bolt of the cold start injector pipe and remove the bolt and two gaskets from the delivery pipe.

(f) Drain the fuel in the delivery pipe.

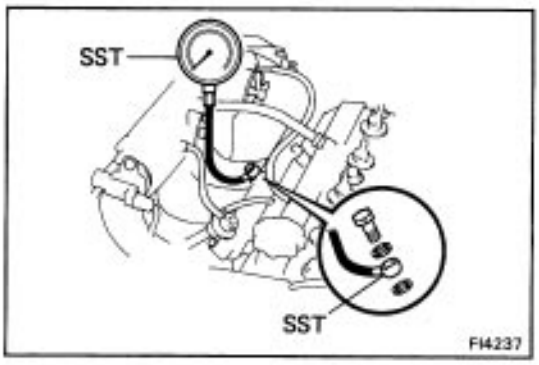

(g) Install a gasket, SST, another gasket and union bolt to the delivery pipe as shown in the figure.
SST 09268–45012
(h) Wipe off any splattered gasoline.
M Reconnect the battery cable.

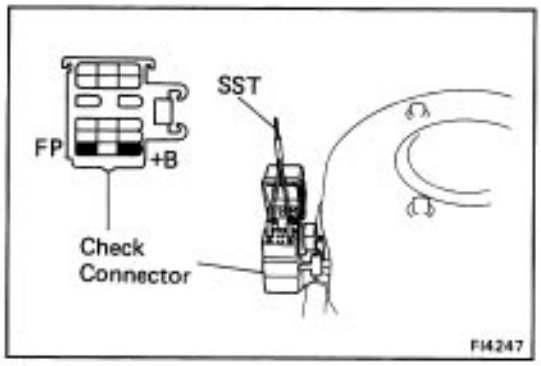

(j) Using SST, connect the terminal + B and FP of the check connector.
SST 09843–18020
HINT: The service connector is located near the air cleaner.

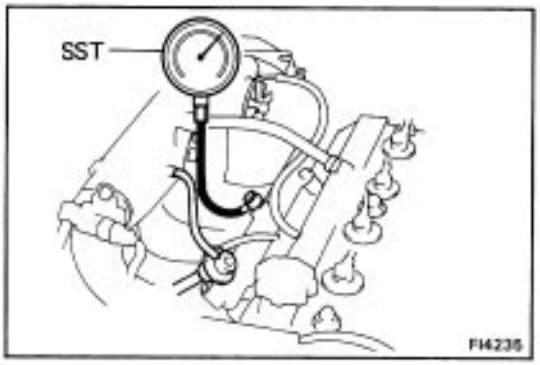

(k) Turn the ignition switch to ON.
(l) Measure the fuel pressure.
Fuel pressure: 2.7 – 3.1 kg /cm2
(38 – 44 psi, 265 – 304 kPa)
If pressure is high, replace the fuel pressure regulator.
If pressure is low, check the following parts.

- Fuel hoses and connection
- Fuel pump
- Fuel filter
- Pressure regulator

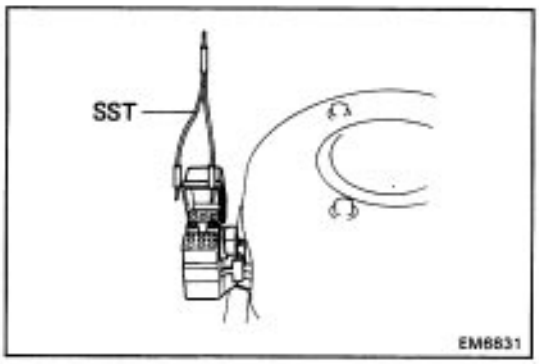

(m) Remove SST from the check connector.
SST 09843–18020
(n) Start the engine.

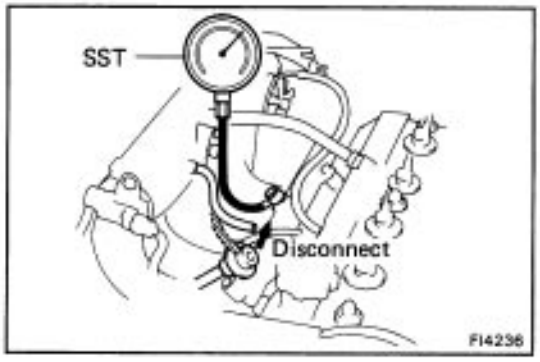

(o) Disconnect the vacuum sensing hose from the pressure regulator and plug it.
Fuel pressure: 2.7 – 3.1 kg/cm2
(38 – 44 psi, 265 – 304 kPa)

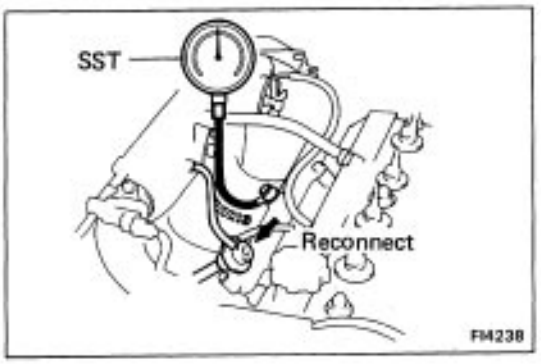

(q) Reconnect the vacuum sensing hose to the pressure regulator.

(r) Measure the fuel pressure at idling.

Fuel pressure: 2.1 – 2.6 kg/cm2
(30 – 37 psi, 206 – 265 kPa)

If no pressure, check the vacuum sensing hose and pressure regulator.

(s) Stop the engine. Check that the fuel pressure remains above 1.5 kg/cm2 (21 psi, 147 kPa) for 5 minutes after the engine is turned off.

If not within specification, check the fuel pump, pressure regulator and/or injectors.

(t) After checking fuel pressure, disconnect the battery ground cable and carefully remove the SST to prevent gasoline from splashing.

(u) Using new gaskets, reconnect the cold start injector hose to the delivery pipe.

(v) Connect the wiring connector to the cold start injector.

(w) Check for fuel leakage.

REMOVAL OF FUEL PUMP

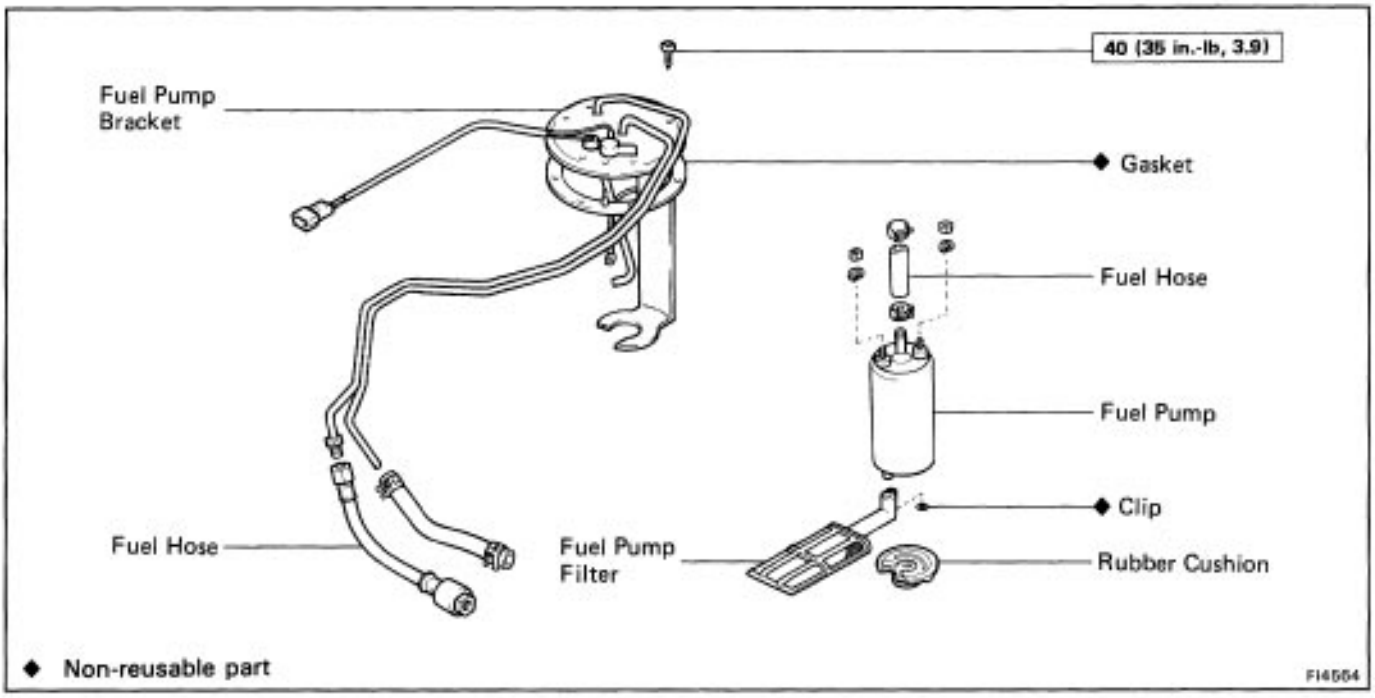

CAUTION: Do not smoke or work near an open frame when working the fuel pump.

1. DRAIN GASOLINE FROM FUEL TANK

2. REMOVE FUEL TANK

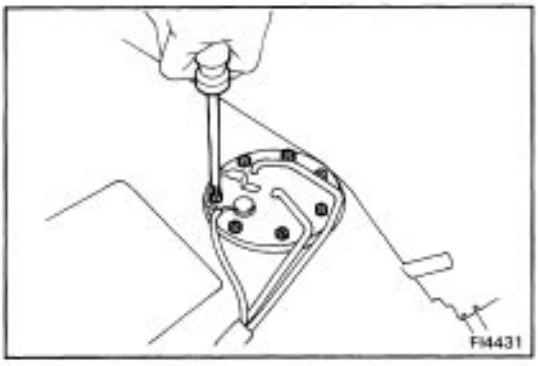

3. REMOVE FUEL PUMP BRACKET FROM FUEL TANK

(a) Remove the seven bolts.

(b) Pull out the fuel pump bracket.

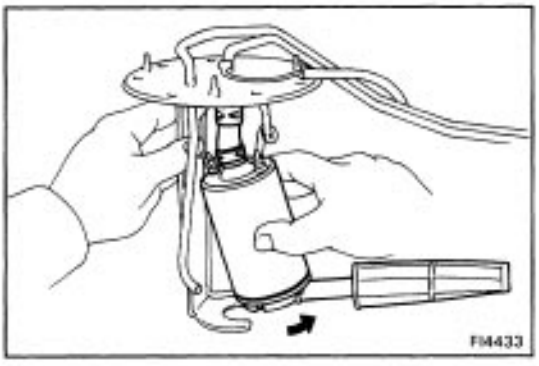

4. REMOVE FUEL PUMP FROM FUEL PUMP BRACKET

(a) Remove the– two nuts and disconnect the wires from the fuel pump.

(b) Pull off the lower side of the fuel pump from the bracket.

(c) Remove the fuel pump from the fuel hose.

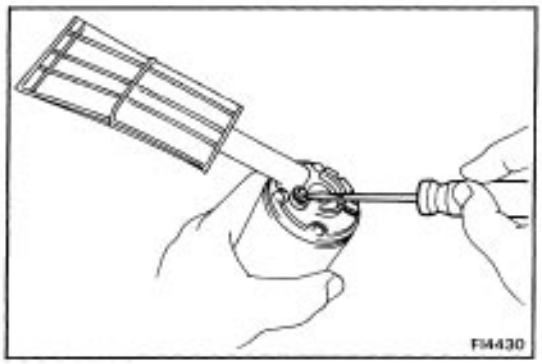

5. REMOVE FUEL PUMP FILTER FROM FUEL PUMP

(a) Remove the rubber cushion.

(b) Remove the clip and pull out the filter.

INSTALLATION OF FUEL PUMP

(See page FI–48)

1. INSTALL FUEL PUMP FILTER TO FUEL PUMP

2. INSTALL FUEL PUMP TO FUEL PUMP BRACKET

(a) Insert the outlet port of the fuel pump into the fuel hose.

(b) Install the rubber cushion to the lower side of the fuel pump.

(c) Push the lower side of the fuel pump, together with the rubber cushion, into the fuel pump bracket.

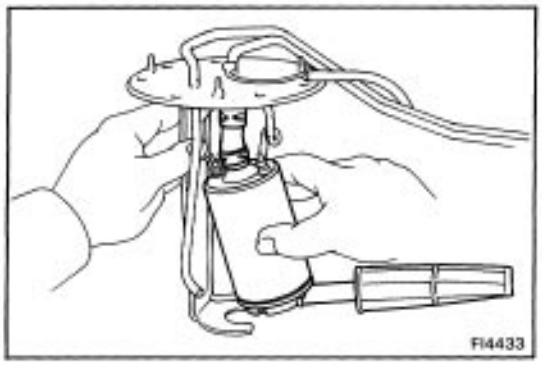

3. INSTALL FUEL PUMP BRACKET

(a) Place the bracket with a new gasket on the fuel tank.

(b) Install and torque the seven bolts.

Torque: 40 kg–cm (35 in.–lb, 3.9 N–m)

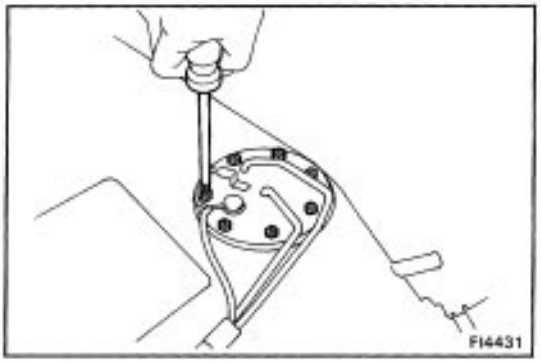

4. INSTALL FUEL TANK

(a) Apply a thin coat of oil to the flare and tighten the flare nut.

(b) Then using SST, tighten the nut to the specified torque.
SST 09631–22022

Torque: 310 kg–cm (22 ft–lb, 30 N–m)

HINT: Use a torque wrench with a fulcrum length of 30 cm (11.81 in.)

NOTICE:

- Tighten the fuel tank mounting bolts, etc. to the specified torque.
- Push in the pipe and insert–type hose the specified position, and install the clip to the specified location.
- If reusing the hose, reinstall the clip at the original location.

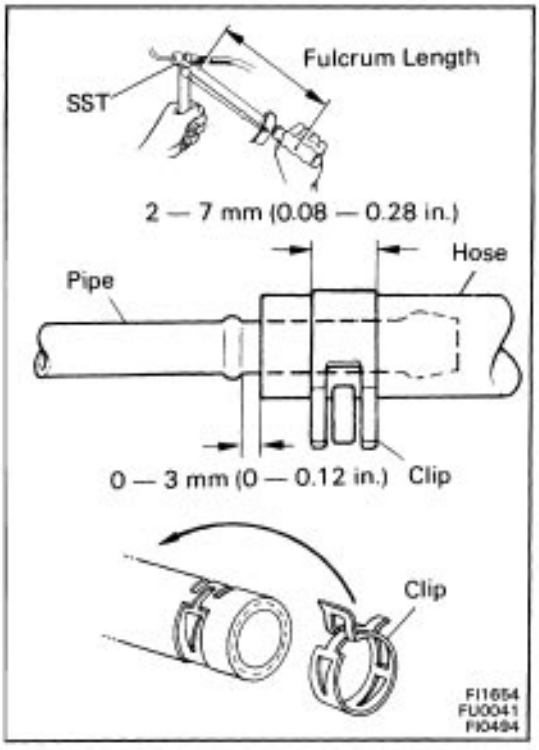

5. REFILL GASOLINE

Cold Start Injector

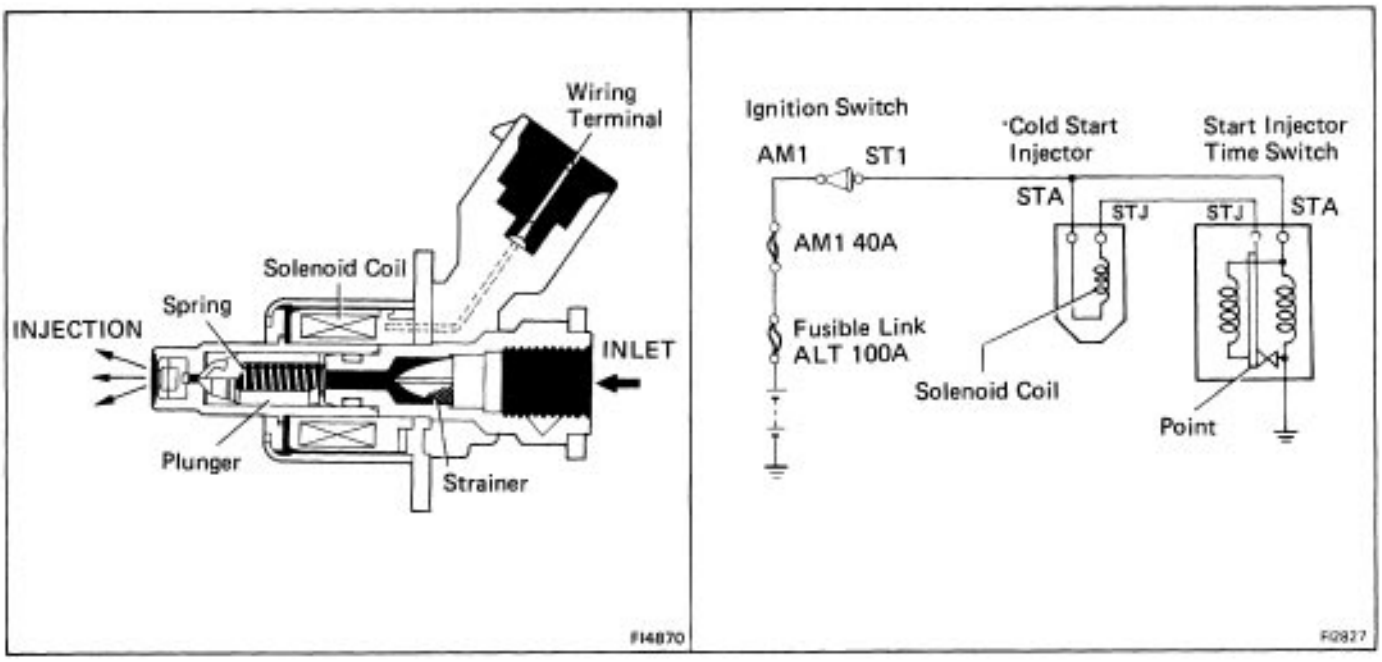

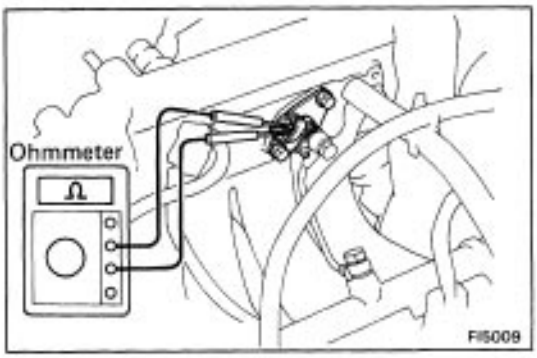

ON–VEHICLE INSPECTION

MEASURE RESISTANCE OF COLD START INJECTOR

(a) Disconnect the cold start injector connector.

(b) Using an ohmmeter, check the resistance of the injector.

Resistance: 2 – 4

(c) Connect the cold start injector connector.

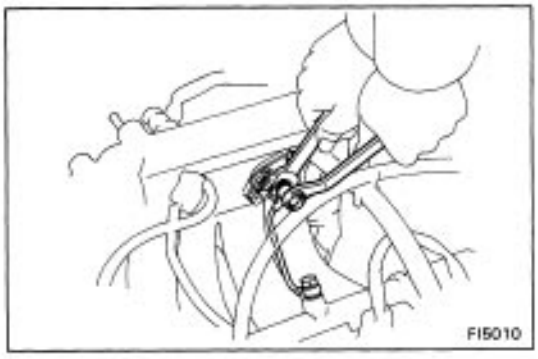

REMOVAL OF COLD START INJECTOR

1. DISCONNECT CABLE FROM NEGATIVE TERMINAL OF BATTERY

2. DISCONNECT COLD START INJECTOR CONNECTOR

3. REMOVE COLD START INJECTOR PIPE

(a) Put a suitable container or shop towel under the cold start injector pipe.

(b) Remove the two union bolts and the cold start injector pipe with the gaskets.

HINT: Slowly loosen the union bolts.

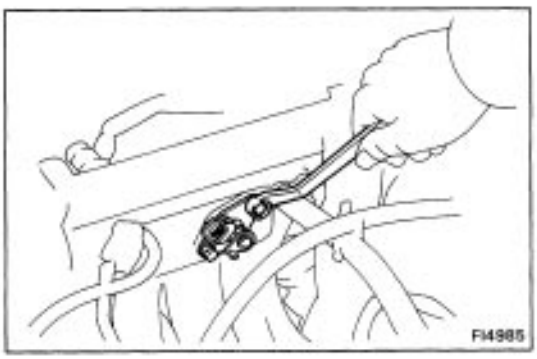

4. REMOVE COLD START INJECTOR

Remove the two bolts and cold start injector with the gasket.

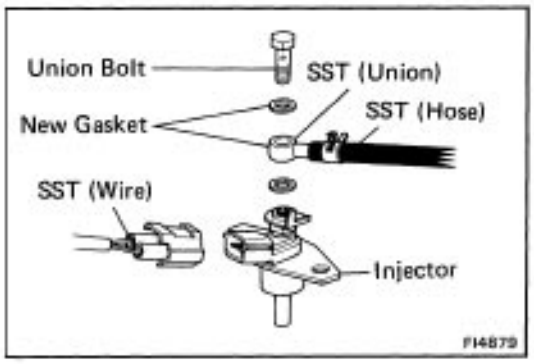

INSPECTION OF COLD START INJECTOR

CHECK INJECTION OF COLD START INJECTOR

(a) Install the gasket, SST (Two unions), another gasket and two union bolts to the delivery pipe and injector.

(b) Connect the SST (Hose) from the unions.
SST 09268–41045 (09268–41080)

(c) Connect the SST (Wire) to the injector.
SST 09842–30055

CAUTION: Position the injector as far away from the battery as possible.

(d) Put a container under the injector.

(e) Turn the ignition switch ON.

NOTICE: Do not start the engine.

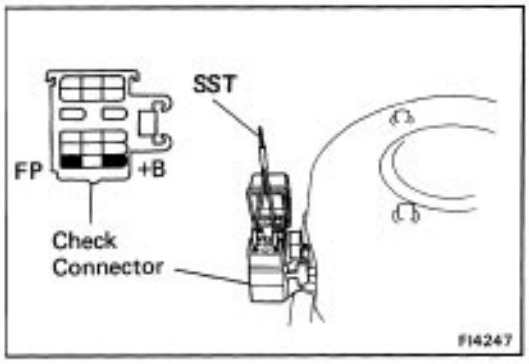

(f) Using SST, connect terminals FP and + B of the check connector.
SST 09843–18020

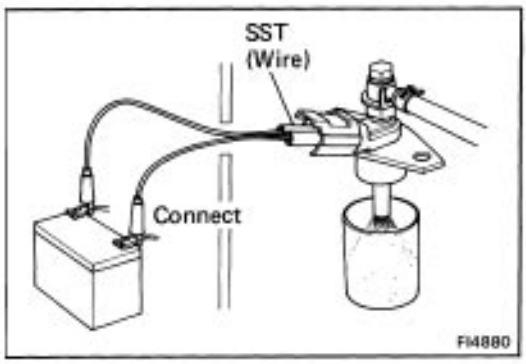

(g) Connect the test probes of the SST to the battery and check that the fuel spray is as shown.
SST 09842–30055
NOTICE: Perform this check within the shortest possible time.

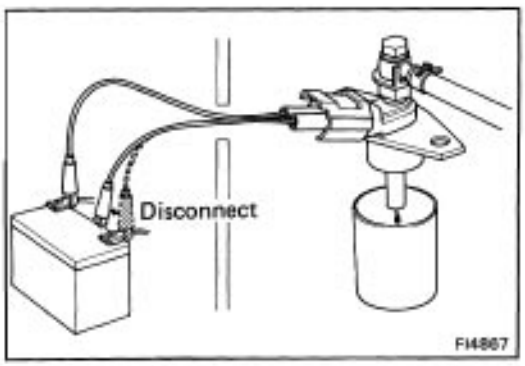

(h) Disconnect the test probes from the battery and check that there is less than one drop of fuel per minute from the injector.

(i) After checking, remove SST and restore the following parts to their original condition.

- Fuel pump check connector
- Ignition switch OFF
- Cold start injector
- Injector wiring

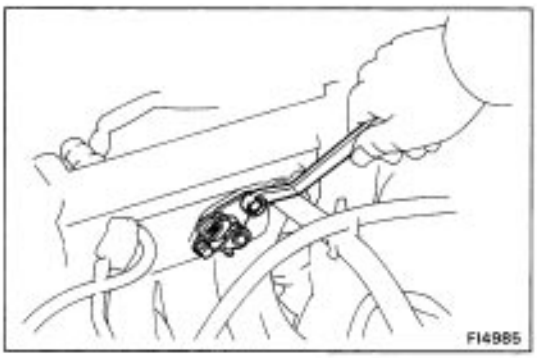

INSTALLATION OF COLD START INJECTOR

1. INSTALL COLD START INJECTOR

Place on a new gasket and install the cold start injector with the two bolts.

Torque: 95 kg–cm (82 in–lb, 9.3 N–m)

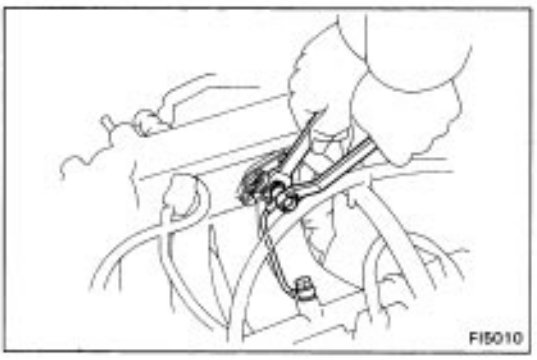

2. INSTALL COLD START INJECTOR PIPE

Using new gaskets, connect the cold start injector pipe to the delivery pipe and cold start injector. Install the union bolts.

Torque: 180 kg–cm (13 ft–lb, 18 N–m)

3. CONNECT COLD START INJECTOR CONNECTOR

4. CONNECT CABLE TO NEGATIVE TERMINAL OF BATTERY

5. CHECK FOR FUEL LEAKAGE (See page FI–9)

Fuel Pressure Regulator

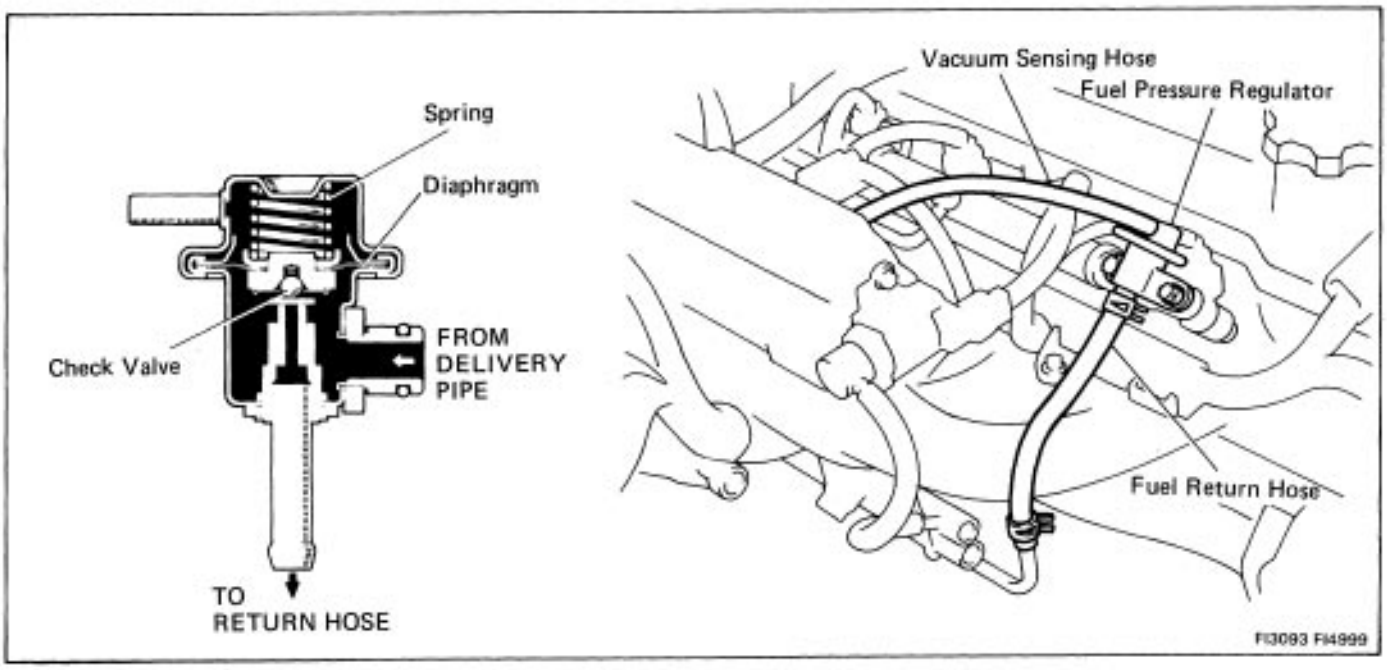

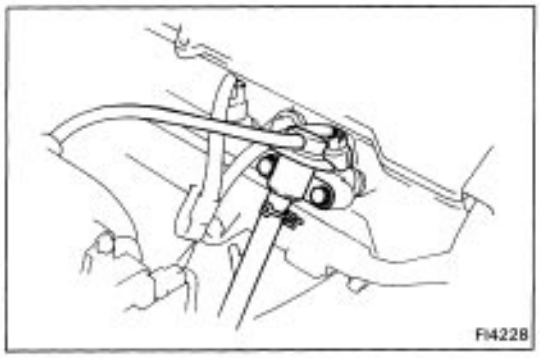

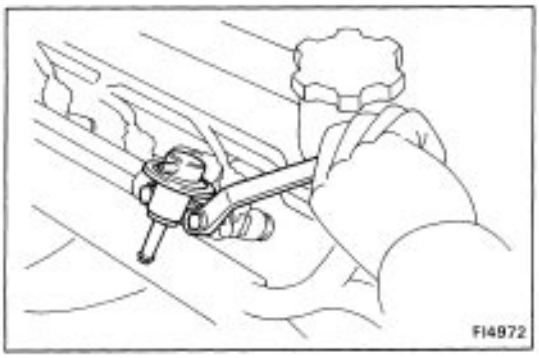

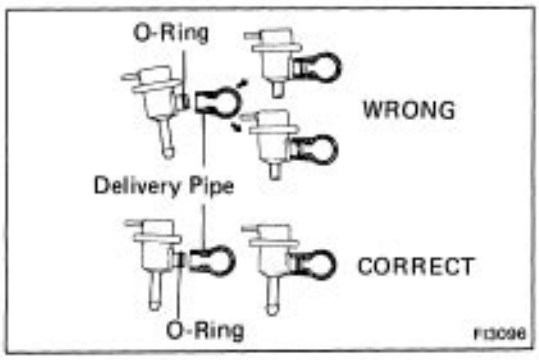

ON–VEHICLE INSPECTION

CHECK FUEL PRESSURE (See page FI–45)

REMOVAL OF PRESSURE REGULATOR

1. DISCONNECT VACUUM SENSING HOSE

2. DISCONNECT FUEL RETURN HOSE

(a) Place a suitable container or shop towel under the pressure regulator.

(b) Disconnect the fuel hose from the pressure regulator.

3. REMOVE PRESSURE REGULATOR

Remove the two bolts and pull put the pressure regulator from the delivery pipe.

INSTALLATION OF PRESSURE REGULATOR

1. INSTALL PRESSURE REGULATOR

Install a new O–ring, the pressure regulator and torque the two bolts.

Torque: 95 kg–cm (82 in–lb, 9.3 N–m)

2. CONNECT FUEL RETURN PIPE

3. CONNECT VACUUM SENSING HOSE

4. CHECK FOR FUEL LEAKAGE (See page FI–9)

Injector

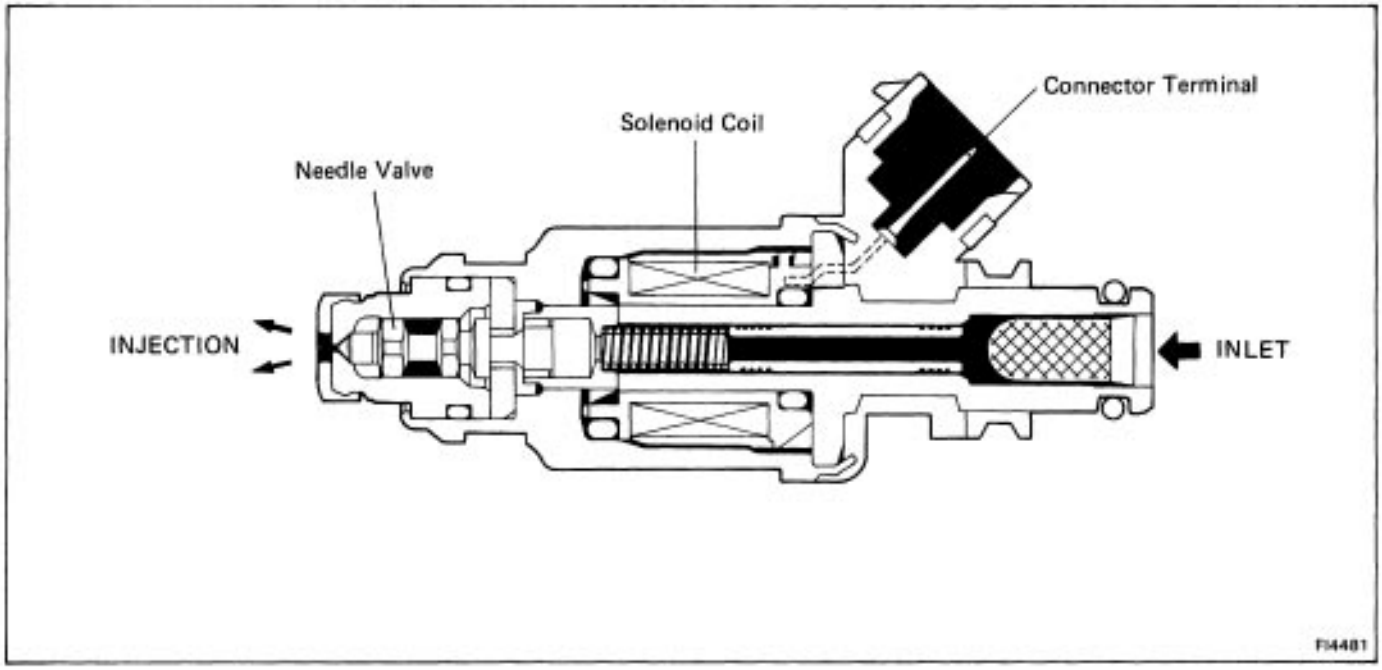

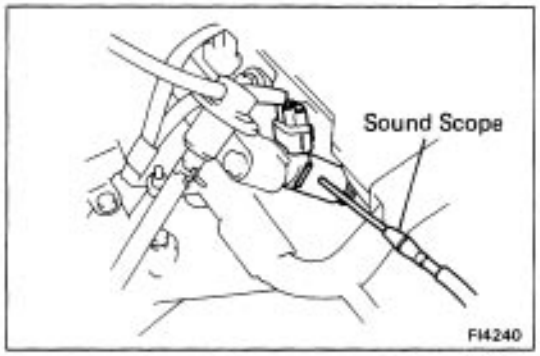

ON–VEHICLE INSPECTION

1. CHECK INJECTOR OPERATION

Check the operating sound from each injector.

(a) With the engine running or cranking, use a sound scope to check that there is normal operating noise in proportion to engine rpm.

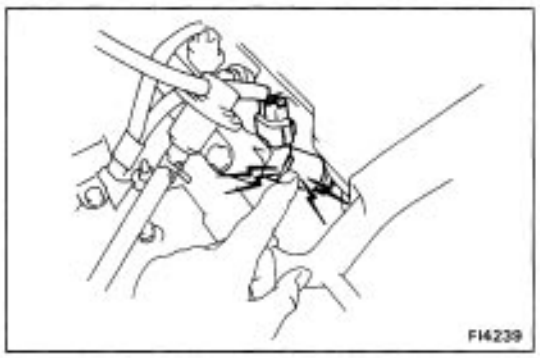

(b) If you have no sound scope, you can check the injector transmission operation with your finger.
If no sound or an unusual sound is heard, check the wiring connector, injector or injection signal from the computer.

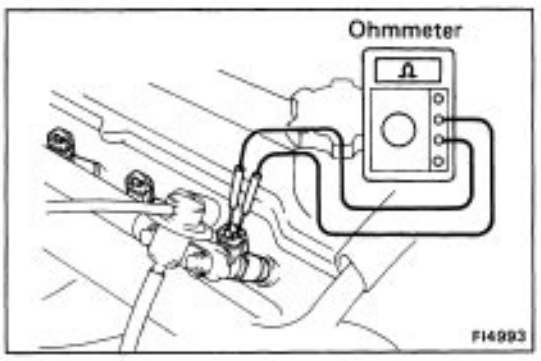

2. MEASURE RESISTANCE OF INJECTOR

(a) Disconnect the injector connector.

(b) Using an ohmmeter, check the resistance of both terminals.

Resistance: Approx. 13.8 Ω (at 20°C (68°F))

REMOVAL OF INJECTOR

1. DISCONNECT CABLE FROM NEGATIVE TERMINAL OF BATTERY

2. DISCONNECT FOLLOWING HOSES:

(a) PCV hoses

(b) Vacuum sensing hose from pressure regulator

(c) Fuel return hose from pressure regulator

3. DISCONNECT INJECTOR CONNECTORS

4. REMOVE COLD START INJECTOR PIPE

(See step 3 on page FI–50)

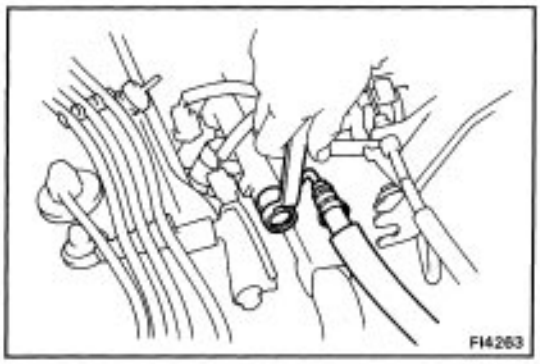

5. DISCONNECT FUEL INLET PIPE

Remove the union bolt, two gaskets and inlet pipe.

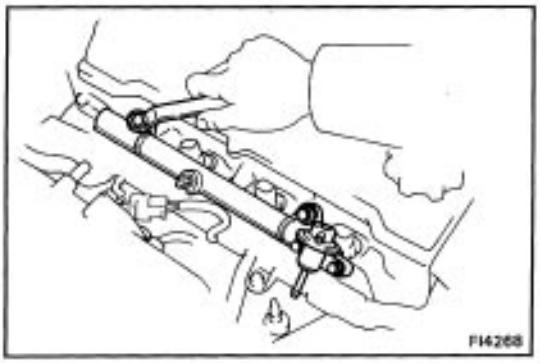

6. REMOVE DELIVERY PIPE

(a) Remove the two bolts, and then remove delivery pipe with the injectors.

HINT: When removing the delivery pipe, be careful not to drop the injectors.

(b) Remove the two spacers and two insulators from the cylinder head.

7. REMOVE INJECTORS

(a) Pull out the injectors from the delivery pipe.

(b) Remove the O–ring from the injector.

INSPECTION OF INJECTOR

1. TEST INJECTION OF INJECTORS

NOTICE : Keep clear for sparks during the test.

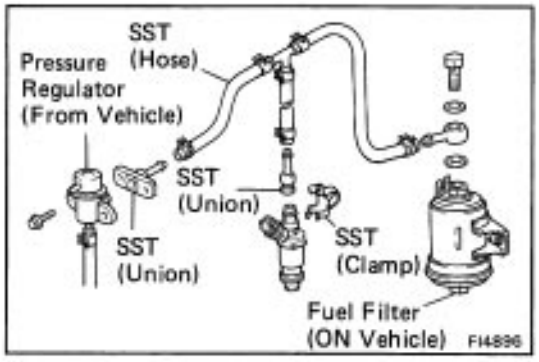

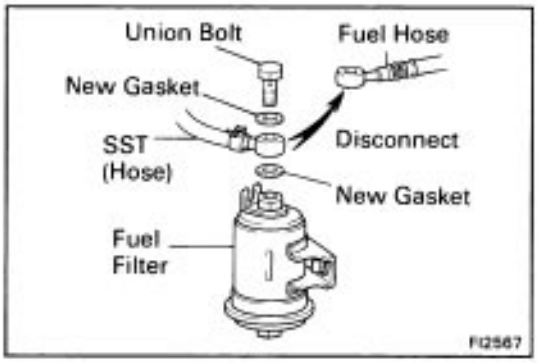

(a) Disconnect the fuel hose from the fuel filter outlet.

(d) Connect the SST (Union) to the fuel filter outlet.

SST 09268–41045 (90405–09015)

HINT: Use the vehicle's fuel filter.

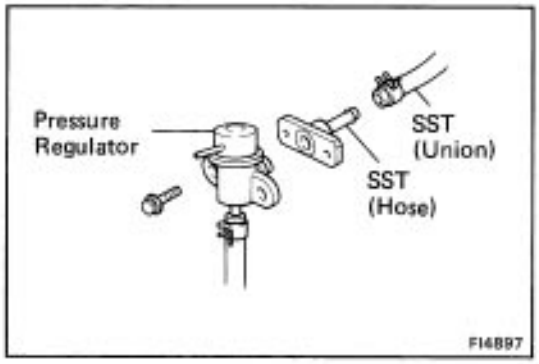

(c) Install SST (Union) to the removed pressure regulator with two bolts.

SST 09268–41045 (09268–41090)

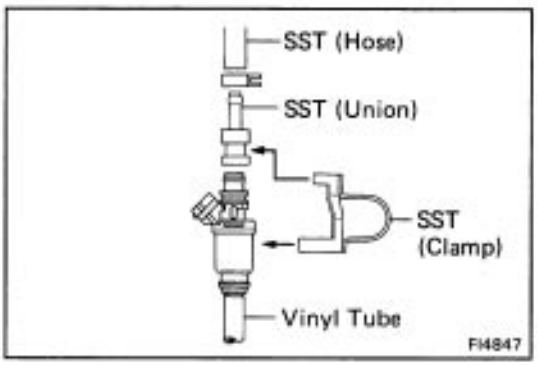

(d) Install SST (Union) to the injector and hold the injector and union with SST (Clamp).

SST 09268–41045

(e) Put the injector into the graduated cylinder.

HINT: Install a suitable vinyl tube onto the injector to prevent gasoline from splashing out.

(f) Connect the battery cable.

(g) Turn the ignition switch ON.

NOTICE: Do not start the engine.

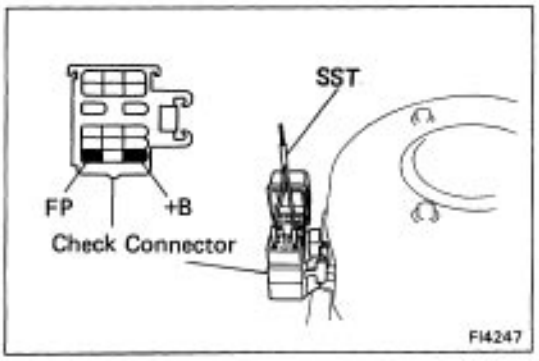

(h) Using SST, connect terminals + B and FP of the check connector.
SST 09843–18020
HINT: The check connector is located near the air cleaner.

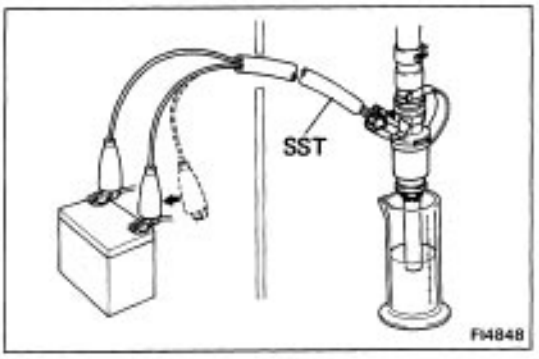

(i) Connect SST (Resistor Wire) to the injector and battery for 15 seconds and measure the injection volume with a graduated cylinder.
Test each injector two or three times. If not within specified volume, replace the injector.
SST 09842–30070
Volume: 40 – 50 cc/ 15 sec. (2.4 – 3.1 cu in.)
Difference between each injector:
5 cc (0–3 cu in.) or less

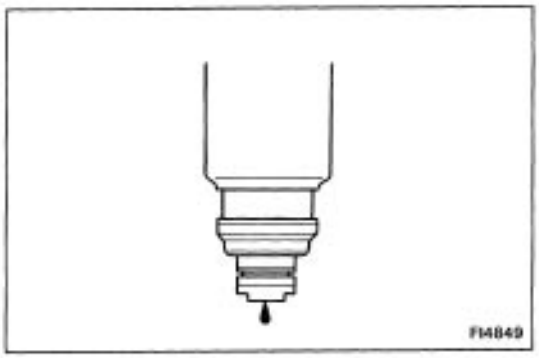

2. CHECK LEAKAGE

(a) In the condition above, disconnect SST from the battery and check for fuel leakage from the injector nozzle.
SST 09842–30070
Fuel drop: Less than one fuel drop of fuel per minute

(b) Disconnect the battery cable.
(c) Remove the SST and disconnect the service wire.
SST 09268–41045

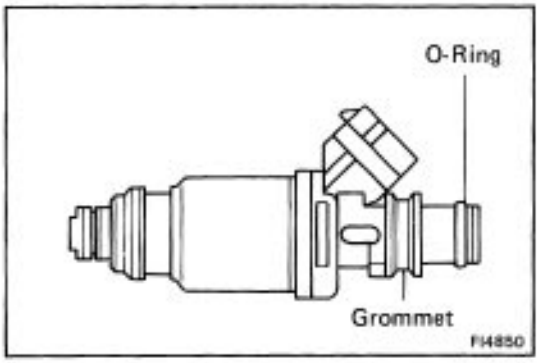

INSTALLATION OF INJECTORS

1. INSTALL INJECTORS INTO DELIVERY PIPE

(a) Replace a new O–ring and grommet on to the injector.

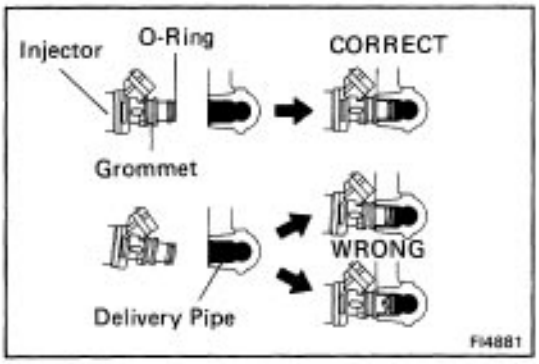

(b) Apply a thin coat of gasoline to the O–rings and install the injectors into the delivery pipe.

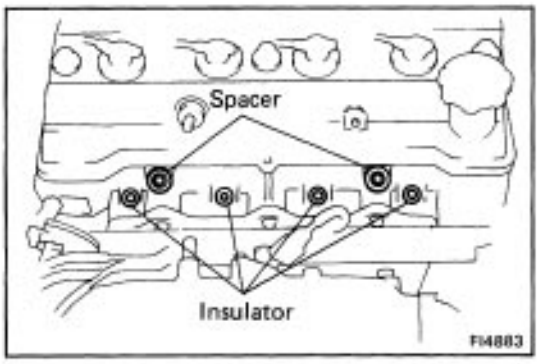

2. INSTALL DELIVERY PIPE WITH INJECTORS

(a) Install the four insulators into the injector hole of the cylinder head.

(b) Install the two spacers on the delivery pipe mounting hole of the cylinder head.

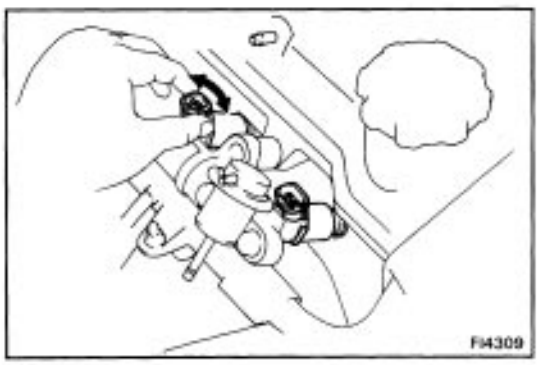

(c) Place the injectors together with the delivery pipe on the cylinder head.

(d) Make sure that the injectors rotate smoothly.

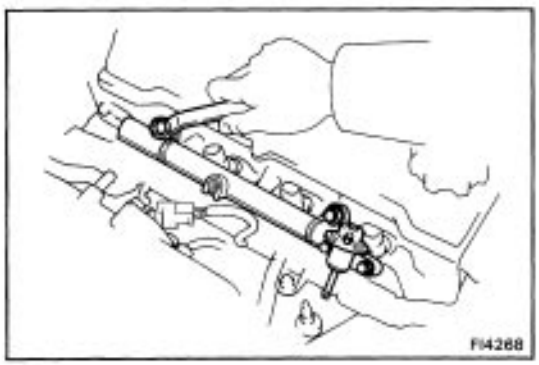

(e) Install and torque the bolts.

Torque: 150 kg–cm (11 ft–lb, 15 N–m)

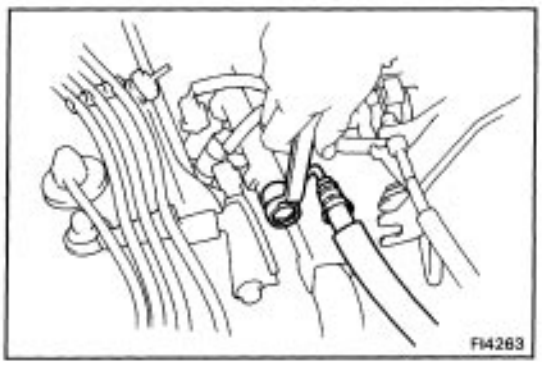

3. CONNECT FUEL INLET PIPE

Install two new gaskets, the inlet pipe and union bolt.

Torque: 300 kg–cm (22 ft–lb, 29 N–m)

4. INSTALL COLD START INJECTION PIPE

(See step 2 on page FI–52)

5. CONNECT INJECTOR CONNECTORS

6. CONNECT FOLLOWING HOSES:

(a) Fuel return hose to the pressure regulator

(b) Vacuum sensing hose to the pressure regulator

(c) PCV hoses

7. CONNECT CABLE TO NEGATIVE TERMINAL OF BATTERY

8. CHECK FOR FUEL LEAKAGE (See page FI–9)

Fuel Tank and Line

COMPONENTS

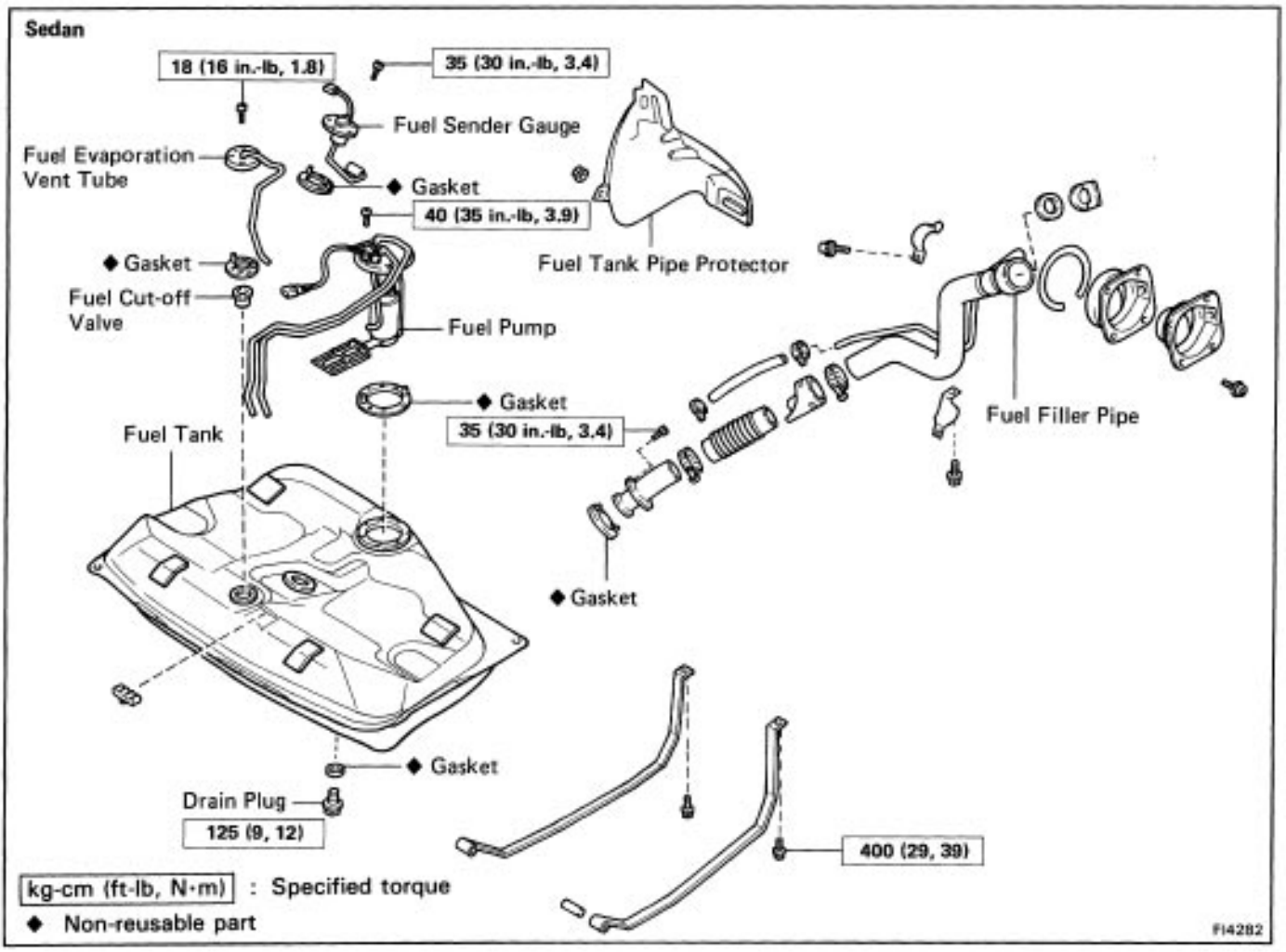

COMPONENTS (Cont'd)

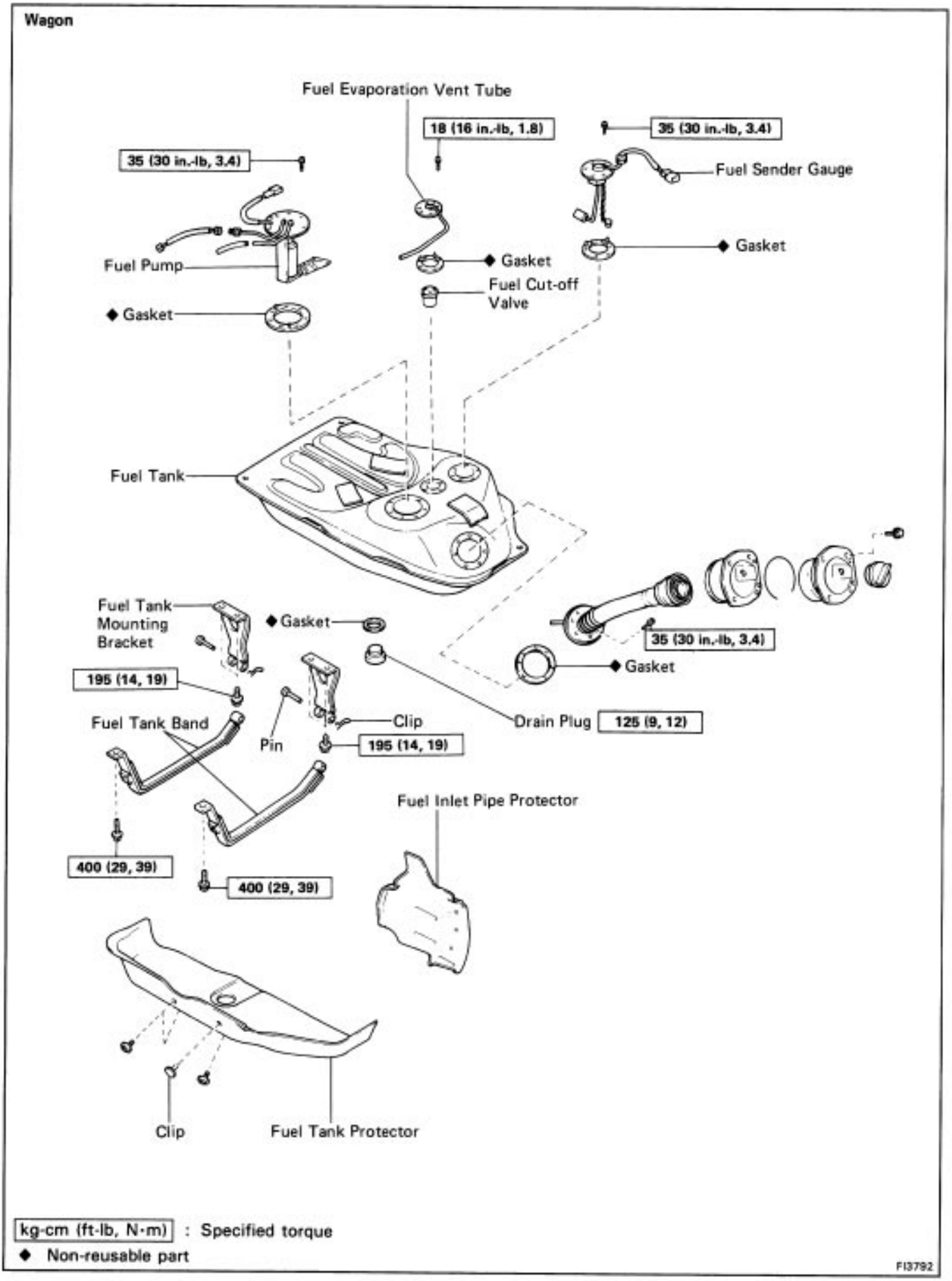

COMPONENTS (Cont'd)

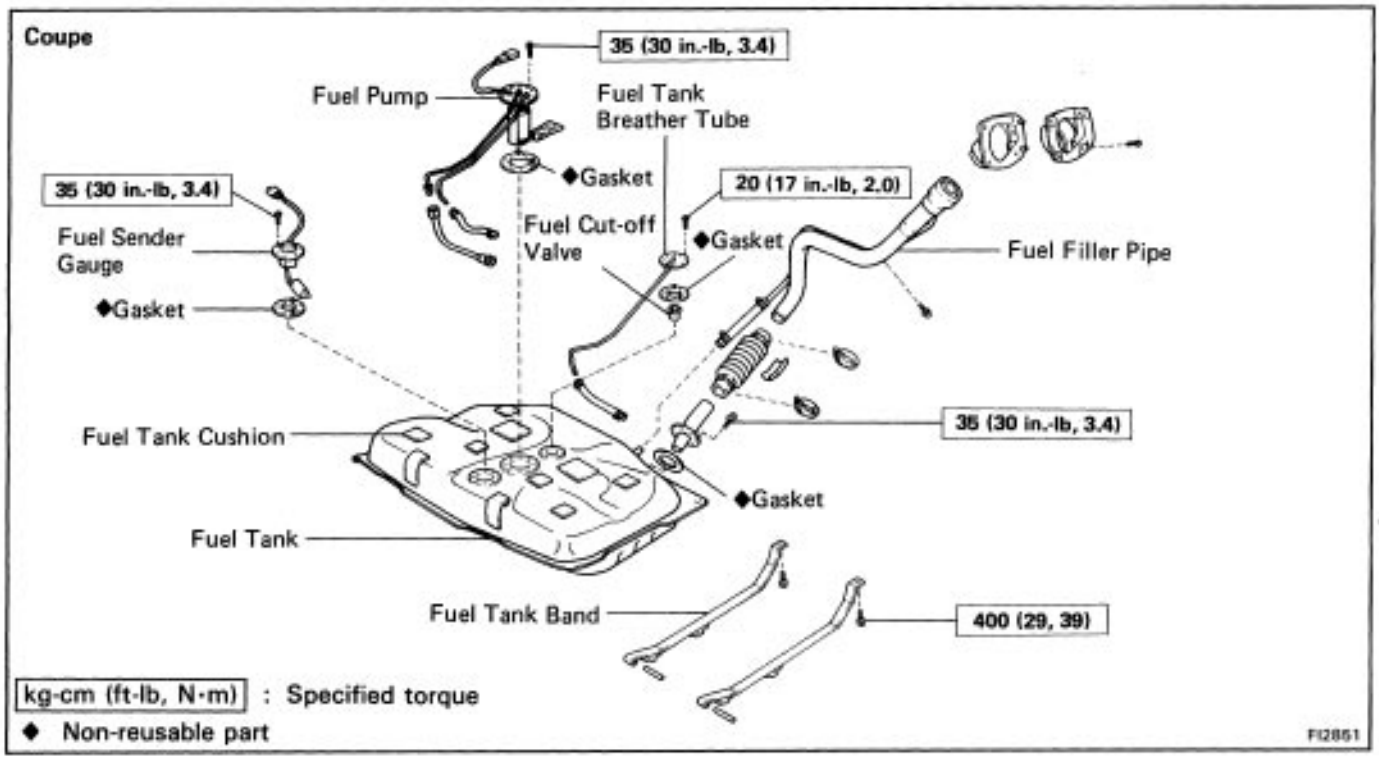

PRECAUTIONS

1. Always use new gaskets when replacing the fuel tank or components parts.

2. When reinstalling, be sure to include the rubber protectors on the upper surfaces of the fuel tank and tank band.

3. Apply the proper torque to all tightening parts.
Torque: 400 kg–cm (29 ft–lb, 39 N–m)

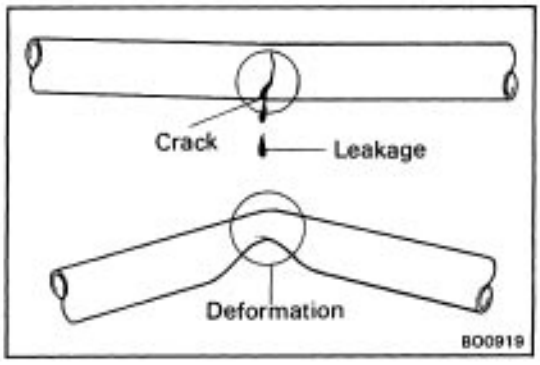

INSPECT FUEL LINES AND CONNECTIONS

(a) Inspect the fuel lines and connections for cracks, leakage or deformation.

(b) Inspect the fuel tank vapor vent system hoses and connections for looseness, kinks or damage.

(c) Inspect the fuel tank for deformation, cracks, fuel leakage or tank band looseness.

(d) Inspect the filler for damage or fuel leakage.

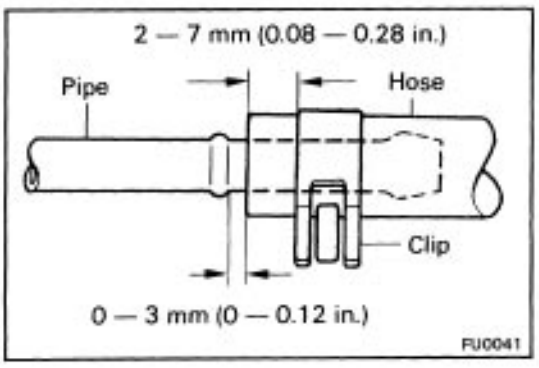

(e) Hose and tube connections are as shown in the illustration.
If a problem is found, repair or replace the parts as necessary.

AIR INDUCTION SYSTEM

Throttle Body

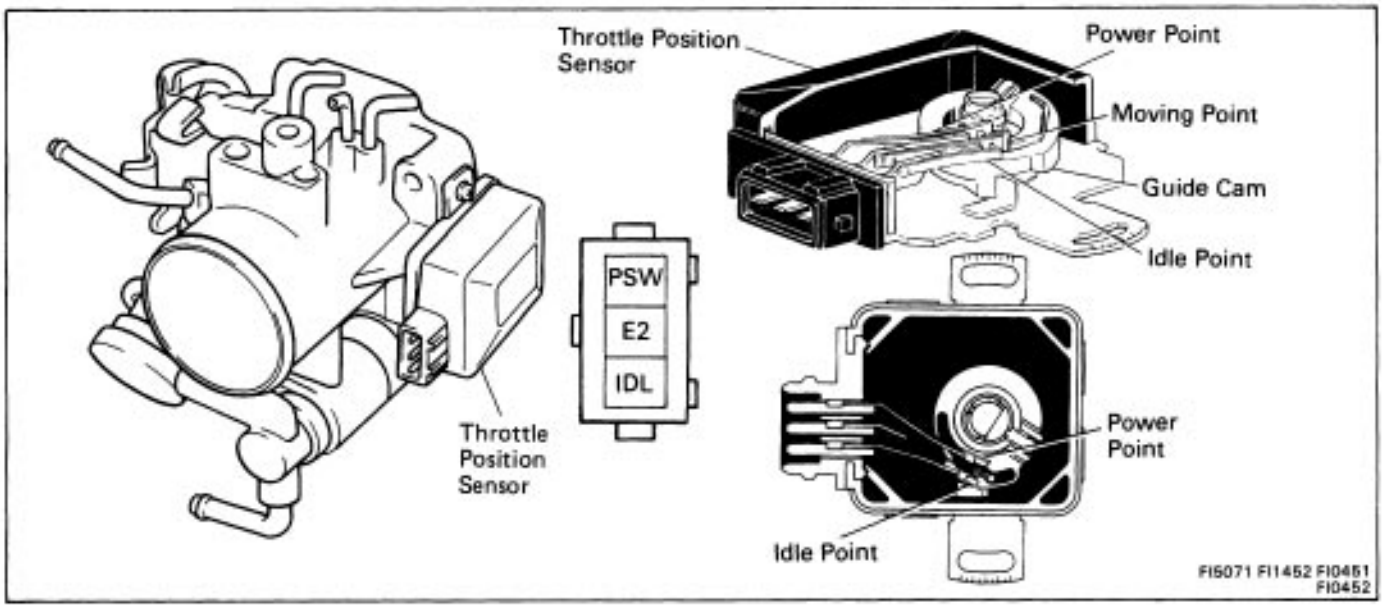

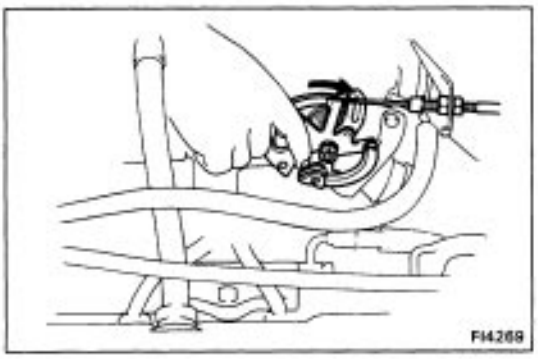

ON–VEHICLE CHECK

1. CHECK THROTTLE BODY

(a) Check that the throttle linkage moves smoothly.

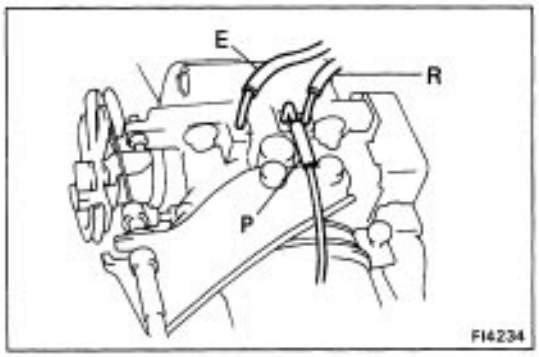

(b) Check the vacuum at each port.

- Start and warm up the engine.
- Check the vacuum with your finger.

Port	Throttle Valve Opening
P*1	Positioned more than P port.
E*2	Positioned more than E port.
R*2	Positioned more than R port.

*1: With fuel evaporative emission control system

*2: With exhaust gas recirculation system (Calif. and 4WD)

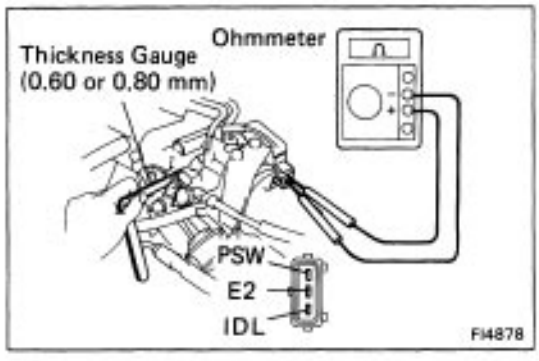

2. CHECK THROTTLE POSITION SENSOR

Check the resistance between terminals.

- Disconnect the sensor connector.
- Insert a thickness gauge between the throttle stop screw and stop lever.
- Using an ohmmeter, check the continuity between each terminals.

Clearance between lever and stop screw	Continuity between terminals		
	IDL — E2	PSW — E2	IDL — PSW
0.60 mm (0.0236 in.)	Continuity	No continuity	No continuity
0.80 mm (0.0315 in.)	No continuity	No continuity	No continuity
Throttle valve fully opened position	No continuity	Continuity	No continuity

REMOVE OF THROTTLE BODY

1. DISCONNECT CABLE FROM NEGATIVE TERMINAL OF BATTERY

2. DRAIN COOLANT FROM THROTTLE BODY

3. DISCONNECT ACCELERATOR CABLE FROM THROTTLE LINKAGE

4. DISCONNECT AIR CLEANER HOSE

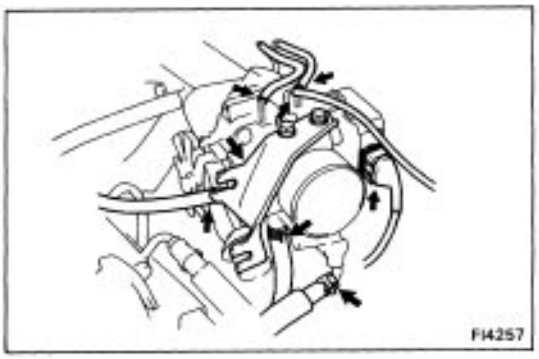

5. REMOVE CABLE BRACKET FROM THROTTLE BODY

6. DISCONNECT THROTTLE POSITION SENSOR CONNECTOR

7. DISCONNECT FOLLOWING HOSES:

(a) Two water by–pass hoses

(b) PCV hose from the throttle body

(c) Vacuum hoses from the three ports

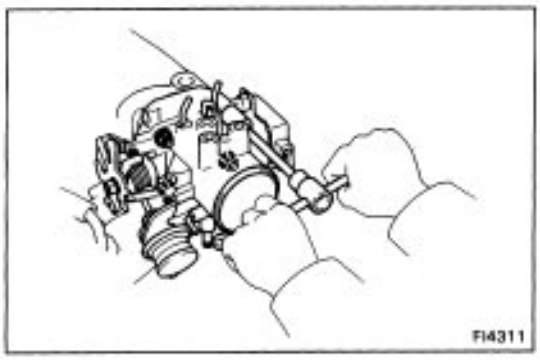

8. REMOVE THROTTLE BODY

Remove the two bolts, two nuts and throttle body with the gasket.

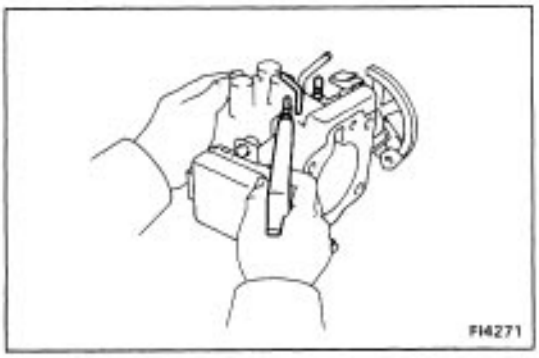

INSPECTION OF THROTTLE BODY

1. CLEAN THROTTLE BODY BEFORE INSPECTION

(a) Wash and clean the cast parts with a soft brush and carburetor cleaner.

(b) Using compressed air, blow all passages and apertures in the throttle body.

NOTICE: To prevent deterioration, do not clean the throttle position sensor and dash pot.

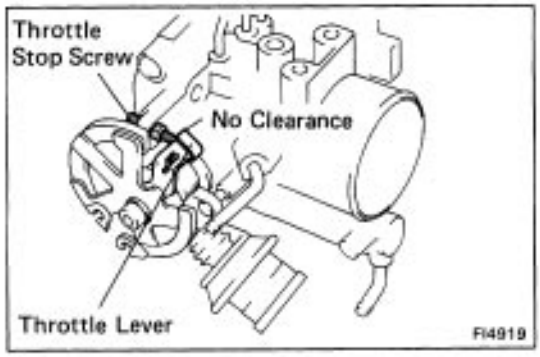

2. CHECK THROTTLE VALVE

Check that there is no clearance between the throttle stop screw and throttle lever when the throttle valve is fully closed.

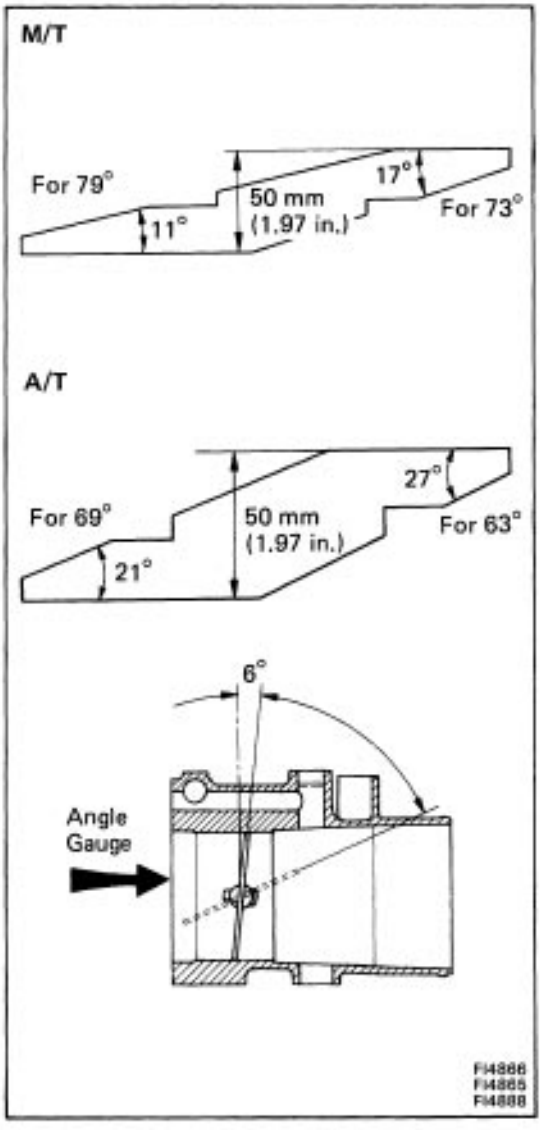

3. CHECK THROTTLE POSITION SENSOR

(a) Make an angle gauge as shown in the figure.

(b) Set throttle valve opening angle to the specifications below from the vertical position (incl. throttle valve fully closed angle 6°).

Throttle valve opening angle: 73° or 79° (M/T)
63° or 69° (A/T)

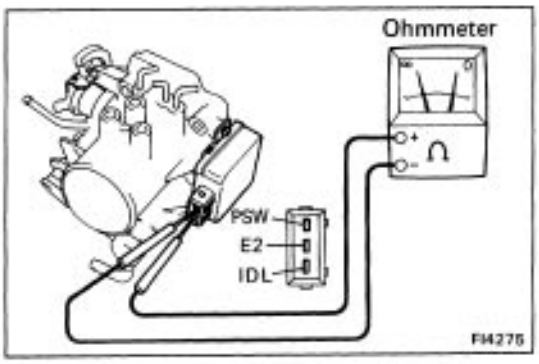

(c) Using an ohmmeter, check the continuity between each terminal.

Throttle valve opening angle		Continuity		
M/T	A/T	IDL – E2	PSW – E2	IDL – PSW
73° from vertical	63° from vertical	No continuity	No continuity	No continuity
79° from vertical	69° from vertical	No continuity	Continuity	No continuity
Less than 7.5° from vertical		Continuity	No continuity	No continuity

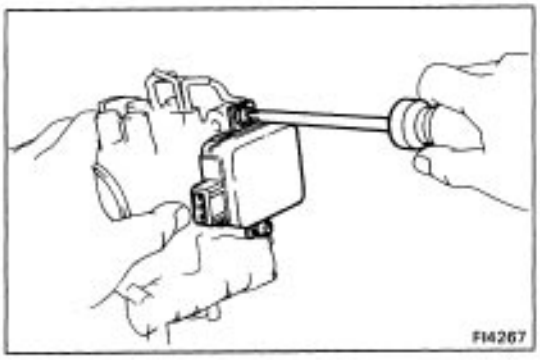

4. IF NECESSARY ADJUST THROTTLE POSITION SENSOR

(a) Loosen the two screws of the sensor.

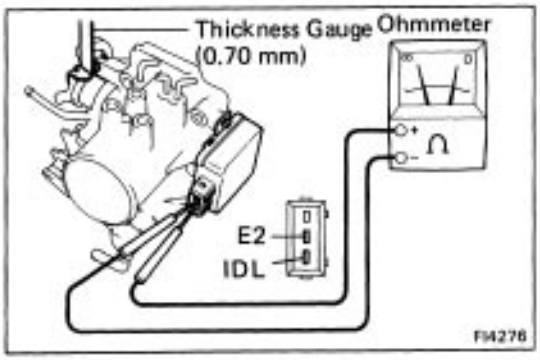

(b) Insert a thickness gauge 0.70 mm (0.0276 in.) between the throttle stop screw and lever, and connect the ohmmeter to terminals IDL and E2.

(c) Gradually turn the sensor clockwise until the ohmmeter deflects, and secure the sensor with two screws.

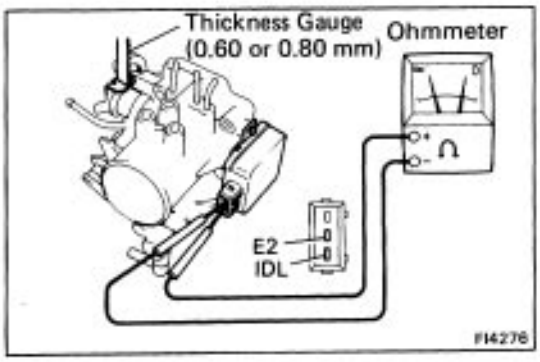

(d) Using a thickness gauge, recheck the continuity between terminals IDL and E2.

Clearance between lever and stop screw	Continuity IDL – E2
0.60 mm (0.0236 in.)	Continuity
0.80 mm (0.0315 in.)	No continuity

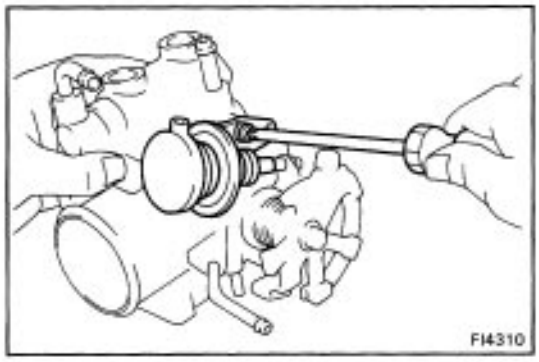

DISASSEMBLY OF THROTTLE BODY

1. (4WD)

REMOVE AUXILIARY AIR VALVE (See page FI–68)

2. REMOVE DASH POT

Remove the screw (2WD) or two screws (4WD) and dash pot.

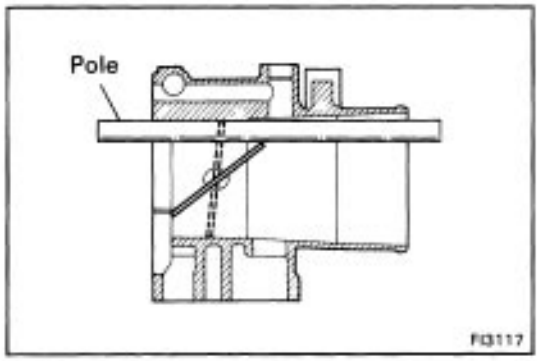

3. REMOVE THROTTLE POSITION SENSOR

(a) Hold the throttle valve opening angle at approx. 451.

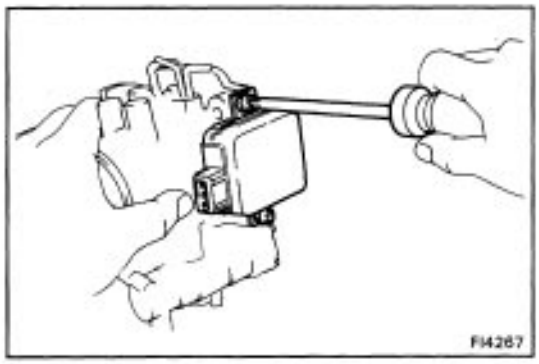

(b) Remove the two screws and throttle position sensor.

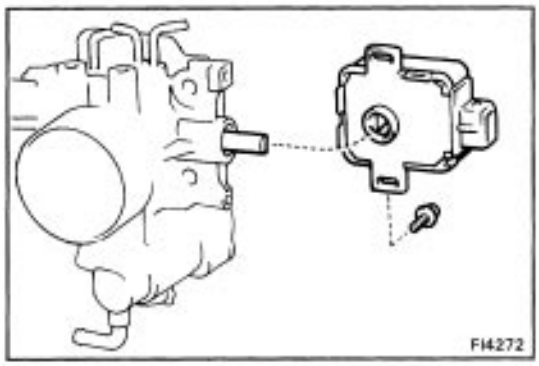

ASSEMBLY OF THROTTLE BODY

1. INSTALL THROTTLE POSITION SENSOR

(a) Place the throttle position sensor over the throttle valve shaft as shown in the figure.

HINT:

- Do not turn the throttle position sensor when it is installed.
- Do not open the position sensor cover.

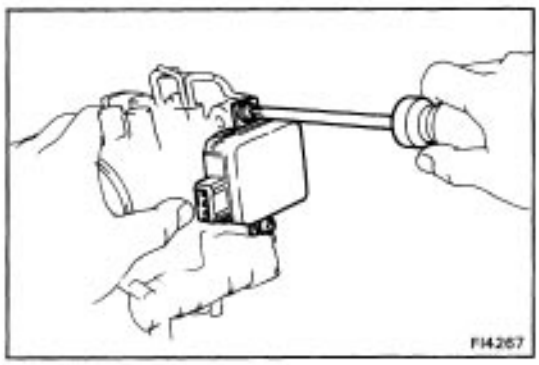

(b) Temporarily install the two screws.

(c) Remove the pole.

2. ADJUST THROTTLE POSITION SENSOR

(See step 4 on page FI–65)

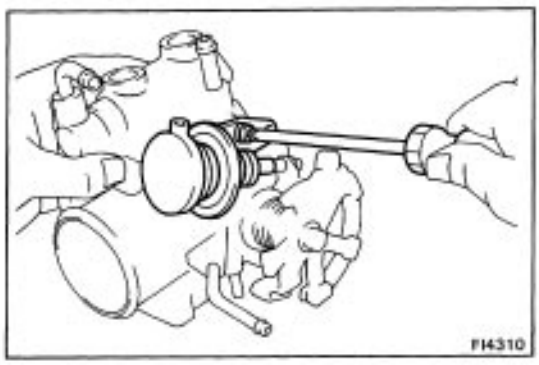

3. INSTALL DASH POT

Install the dash pot with the screw (2WD) or two screws (4WD).

4. (4WD)

INSTALL AIR VALVE (See page FI–68)

INSTALLATION OF THROTTLE BODY

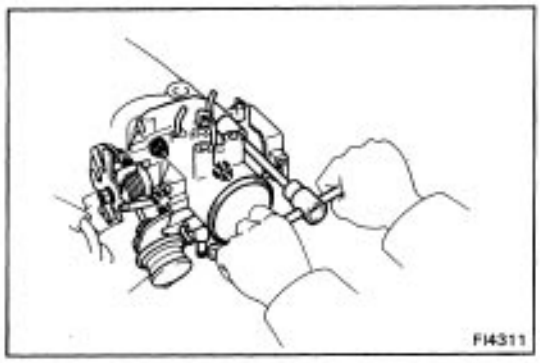

1. INSTALL THROTTLE BODY

Place on a new gasket and install the throttle body with two bolts and two nuts.

Torque: 220 kg–cm (16 ft–lb, 22 N–m)

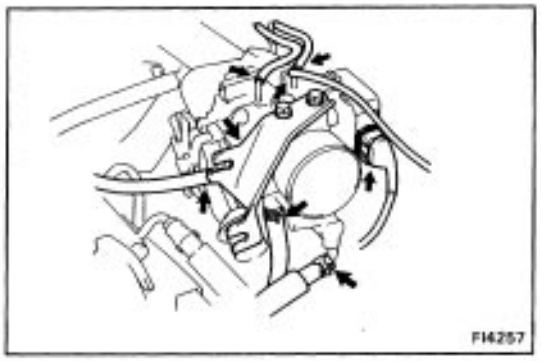

2. CONNECT FOLLOWING HOSES:

(a) Two water by–pass hoses
(b) PCV hose to the throttle body
(c) Vacuum hoses to the three ports

3. CONNECT THROTTLE POSITION SENSOR CONNECTOR

4. INSTALL CABLE BRACKET TO THROTTLE BODY

5. CONNECT AIR CLEANER HOSE

6. CONNECT ACCELERATOR CABLE TO THROTTLE LINKAGE

7. CONNECT CABLE TO NEGATIVE TERMINAL OF BATTERY

8. REFILL WITH COOLANT (See page CO–5)

Auxiliary Air Valve

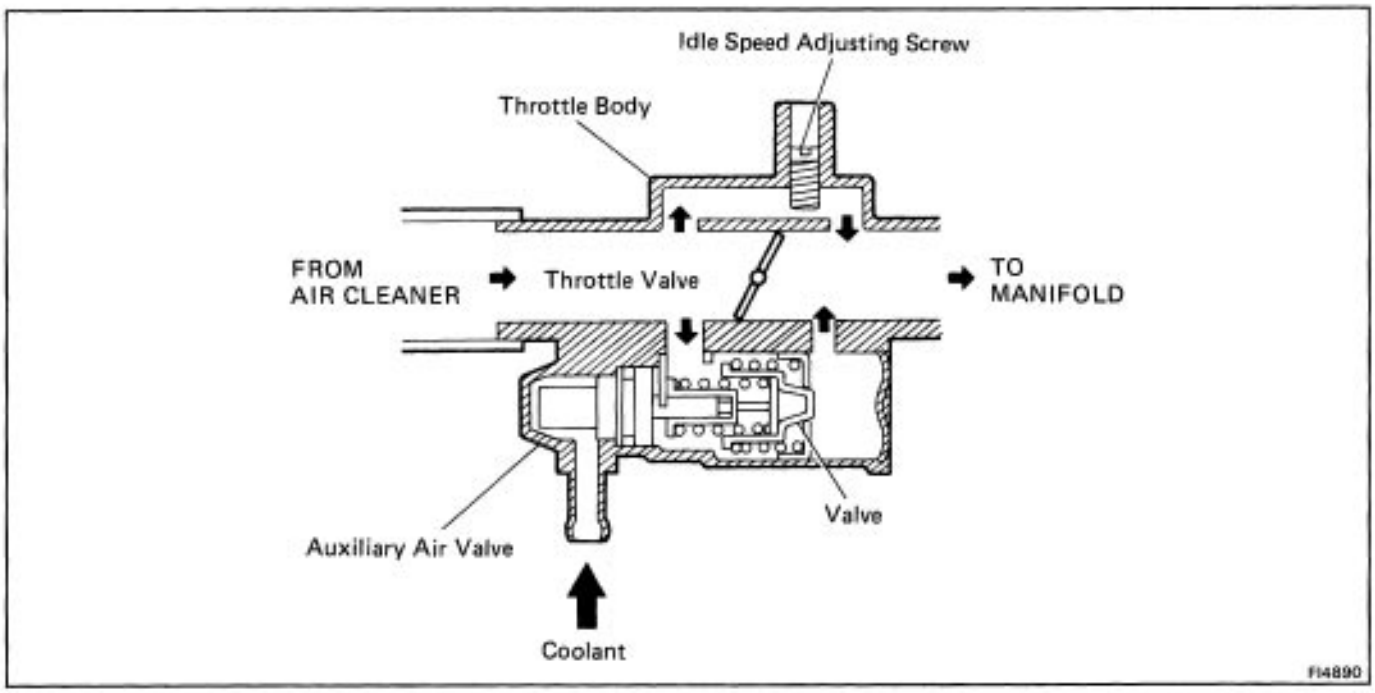

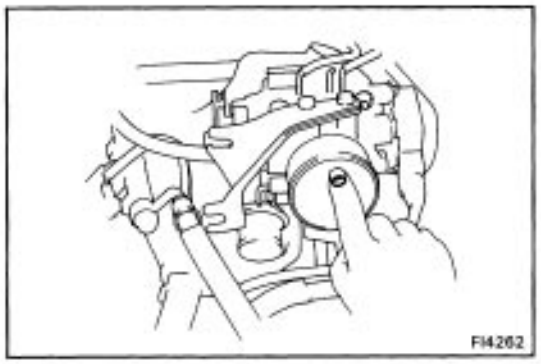

ON–VEHICLE INSPECTION

INSPECT AIR VALVE OPERATION

Check the engine rpm by closing the air valve port on the throttle body.

At low temp. (Coolant temp.: below 80˚C (176˚F)

- When the port is closed, the engine rpm should drop.

After warm–up

- When the port is closed, check that the engine rpm does not drop more than 100 rpm.

If operation is not as specified, replace the air valve.

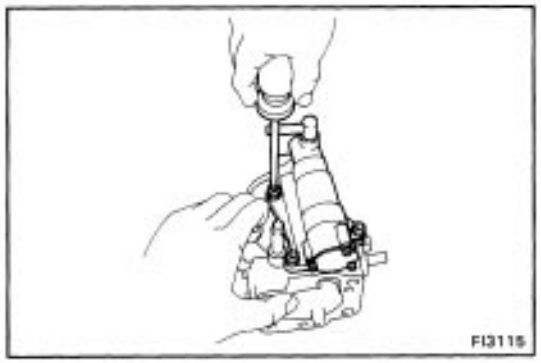

REMOVAL OF AUXILIARY AIR VALVE (4WD)

1. REMOVE THROTTLE BODY (See page FI–63)

2. REMOVE AIR VALVE FROM THROTTLE BODY

Remove the three screws, air valve, gasket and O–ring.

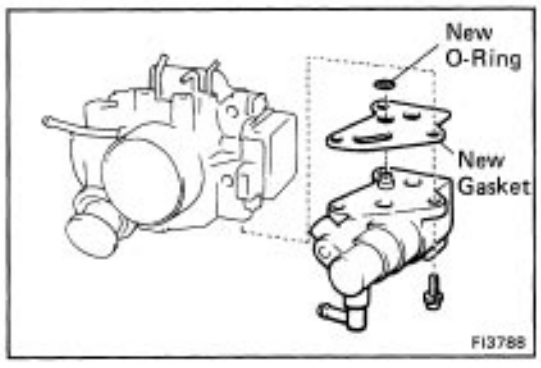

INSTALLATION OF AUXILIARY AIR VALVE (4WD)

1. INSTALL AIR VALVE TO THROTTLE BODY

(a) Place a new gasket and O–ring on the throttle body.

(b) Install the air valve with three screws.

2. INSTALL THROTTLE BODY (See page FI–67)

ELECTRONIC CONTROL SYSTEM

Location of Electronic Control Parts

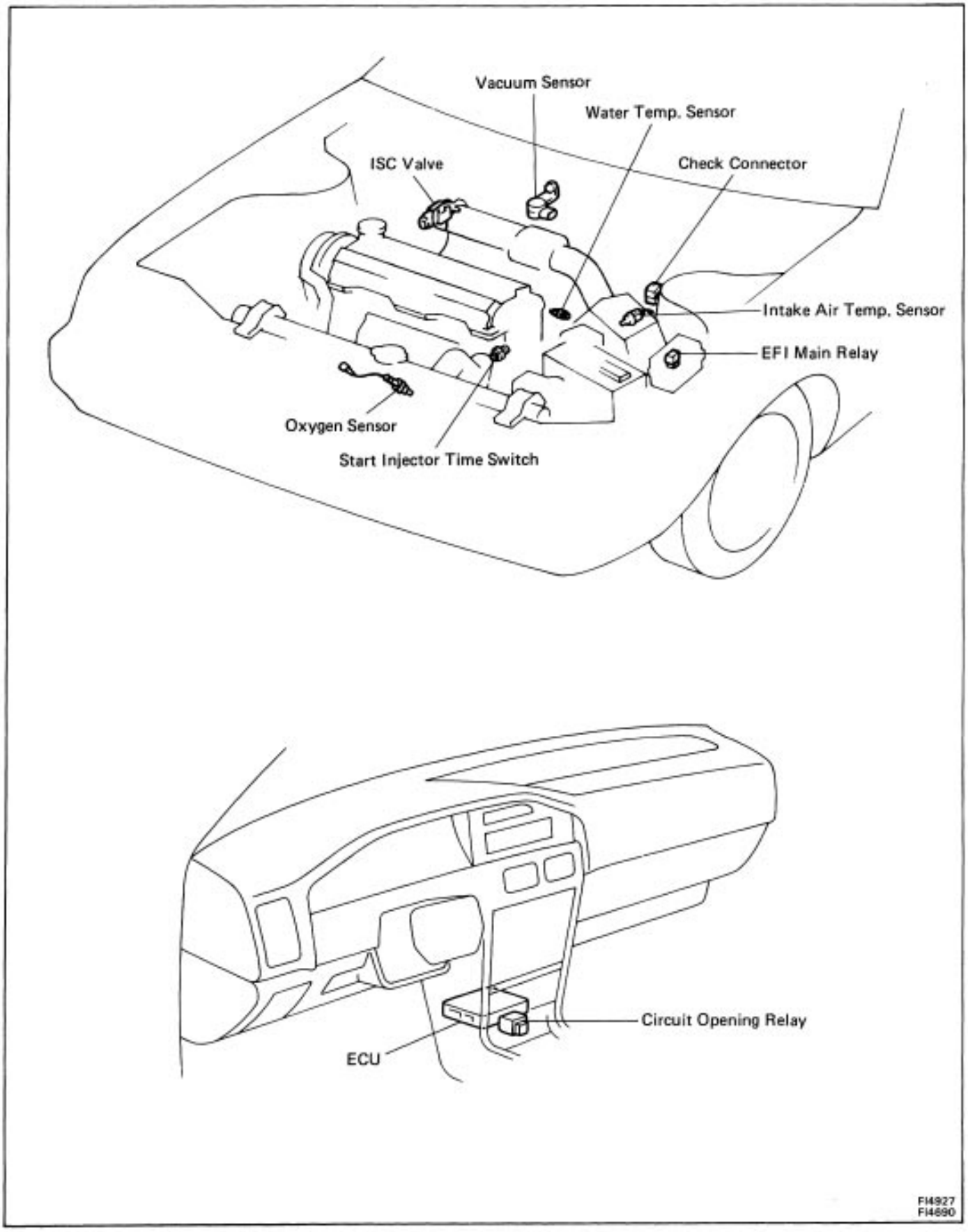

EFI Main Relay

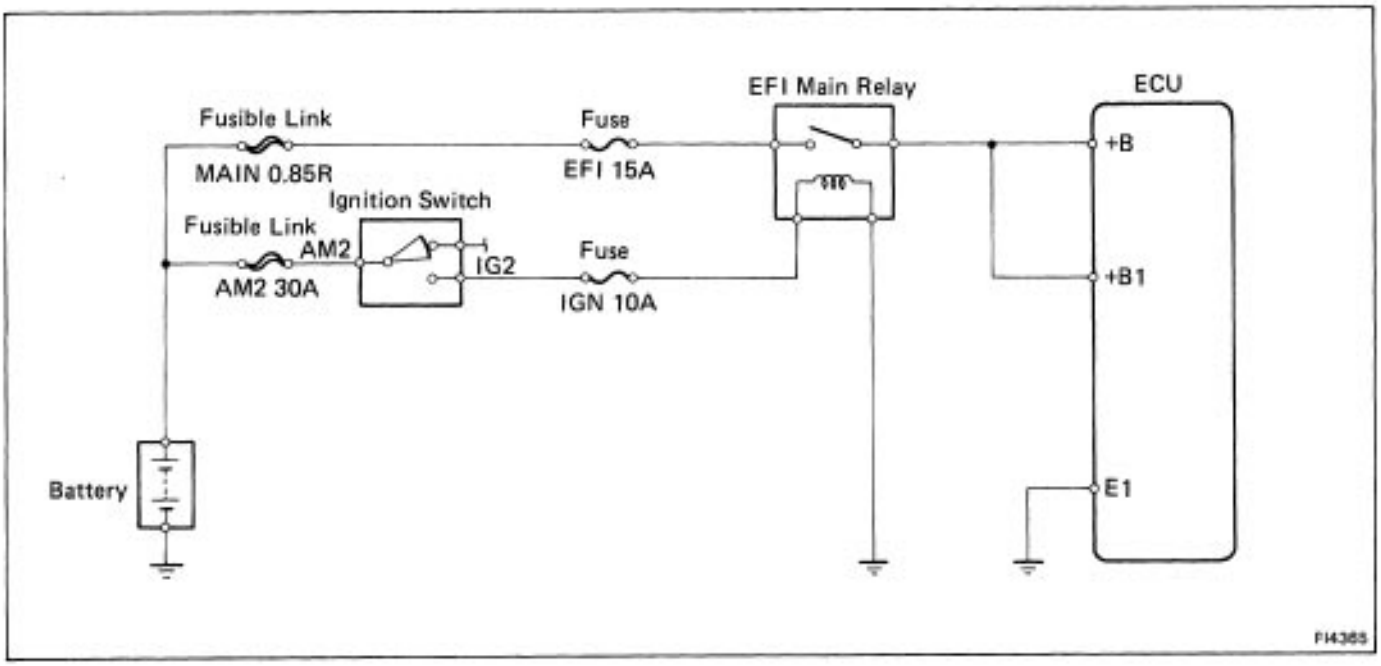

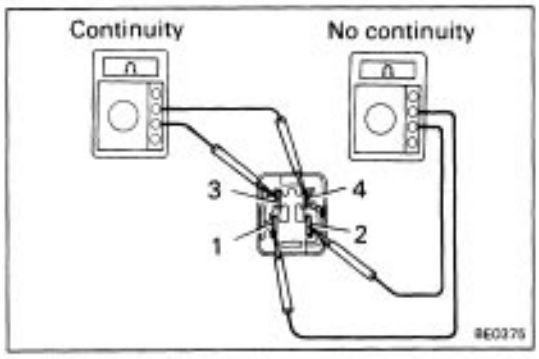

INSPECTION OF EFI MAIN RELAY

1. INSPECT RELAY CONTINUITY

(a) Check that there is continuity between terminals 3 and 4.

(b) Check that there is no continuity between terminals 1 and 2.

If continuity is not as specified, replace the relay.

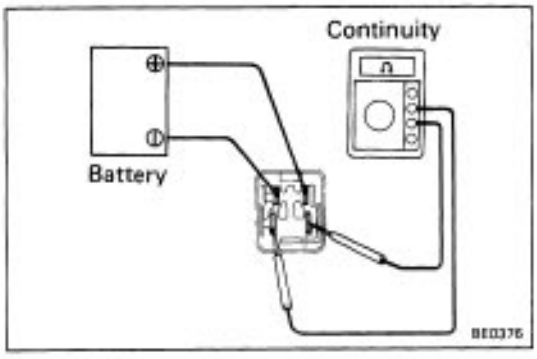

2. INSPECT RELAY OPERATION

(a) Apply battery voltage across terminals 3 and 4.

(b) Check that there is continuity between terminals 1 and 2.

If operation is not as specified, replace the relay.

Circuit Opening Relay

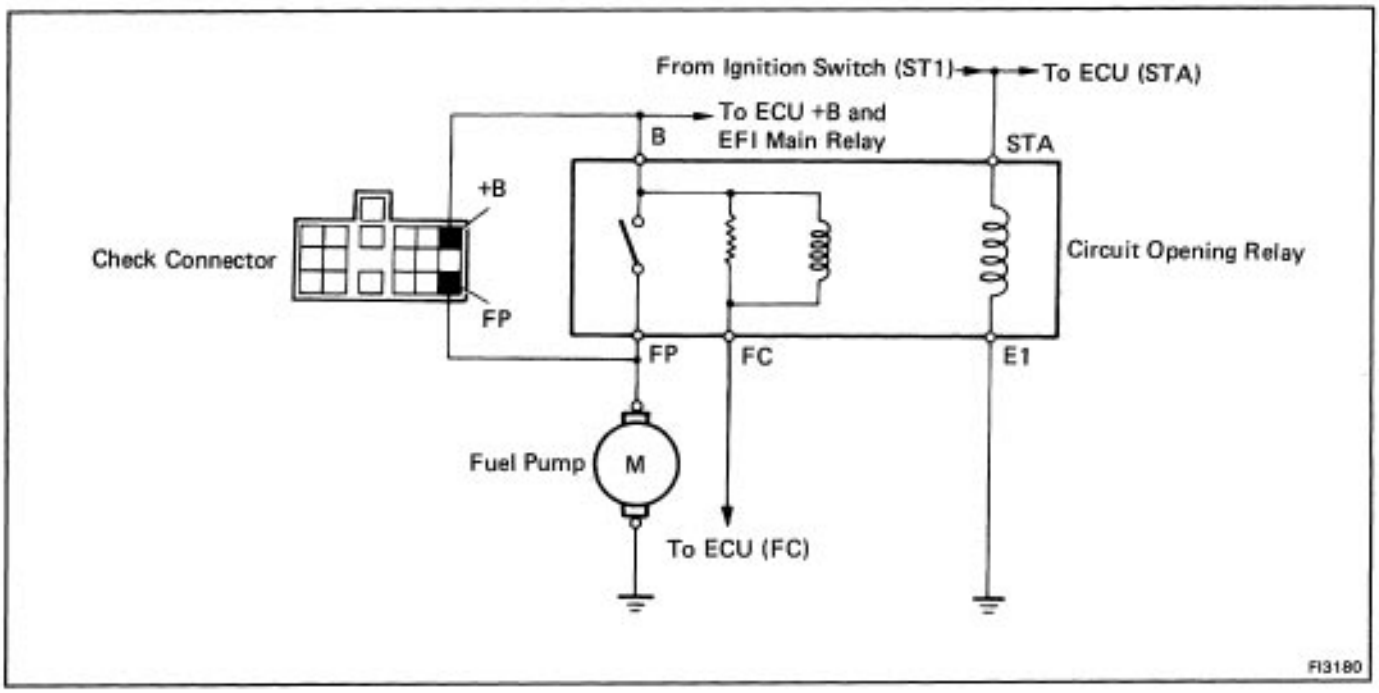

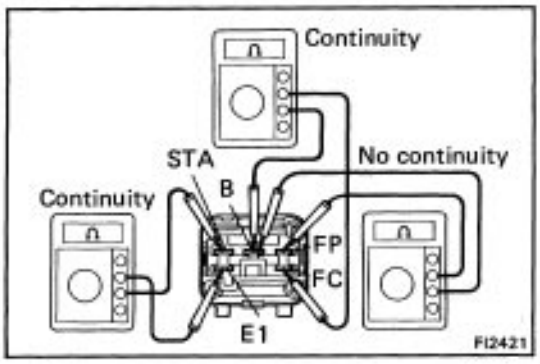

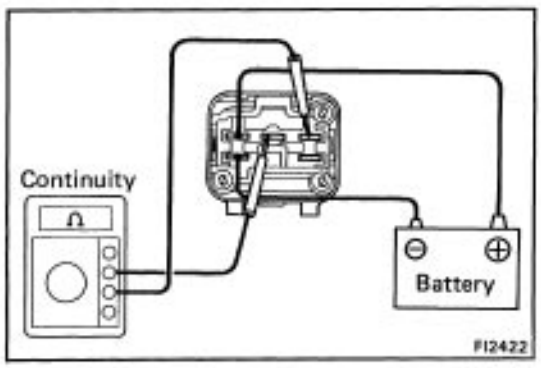

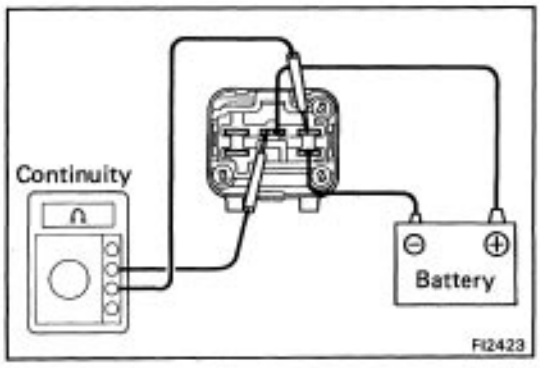

INSPECTION OF CIRCUIT OPENING RELAY

1. INSPECT RELAY CONTINUITY

(a) Using an ohmmeter, check that there is continuity between terminals STA and E1.

(b) Check that there is continuity between terminal B and FC.

(e) Check that there is no continuity between terminals B and FP

If continuity is not as specified, replace the relay.

2. INSPECT RELAY OPERATION

(a) Apply battery voltage across terminals STA and El.

(b) Using an ohmmeter, check that there is continuity between terminals B and FP.

(c) Apply battery voltage across terminals B and FC.

(d) Check that there is continuity between terminals B and FP.

If operation is not as specified, replace the relay.

Start Injector Time Switch

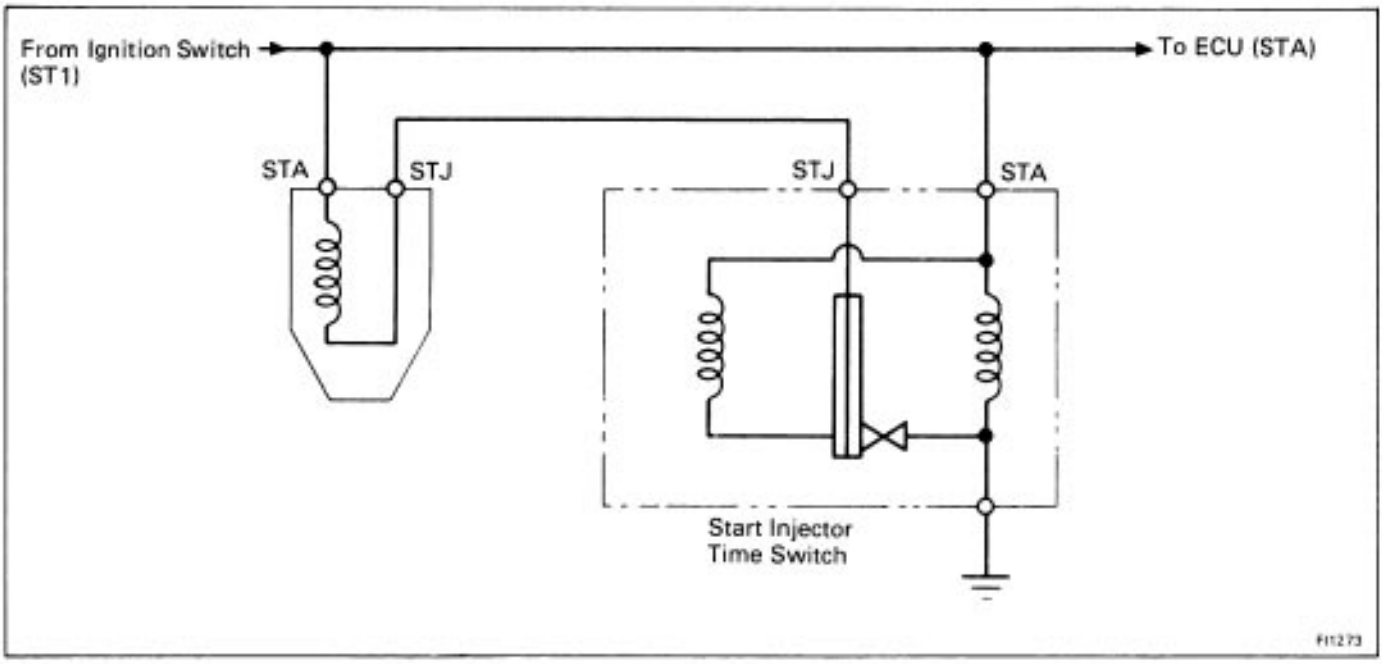

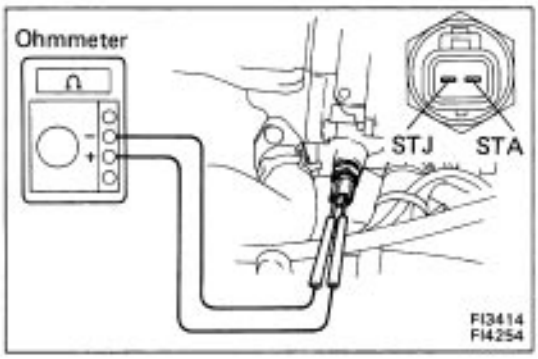

INSPECTION OF START INJECTOR TIME SWITCH

MEASURE RESISTANCE OF START INJECTOR TIME SWITCH

(a) Disconnect the connector.

(b) Using an ohmmeter, measure the resistance between each terminal.

Between terminals	Resistance (Ω)	Coolant temp.
STA — STJ	20 — 40	Below 30°C (86°F)
	40 — 60	Above 40°C (104°F)
STA — Ground	20 — 80	—

Water Temperature Sensor

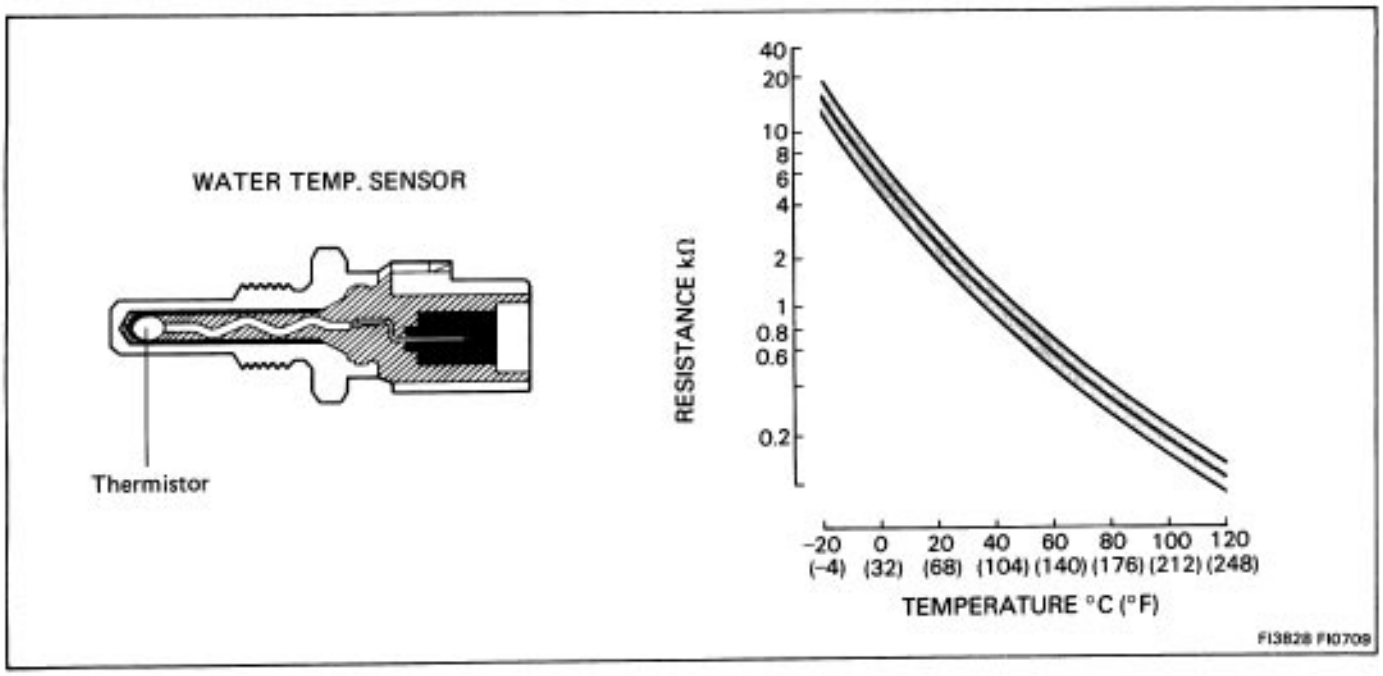

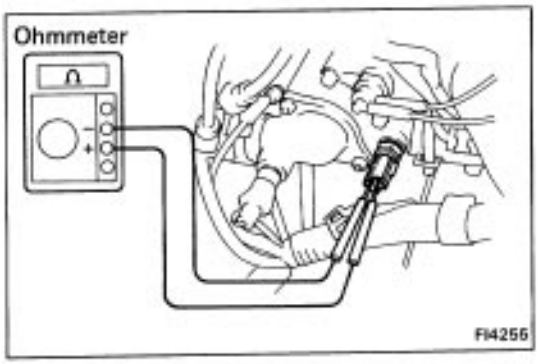

INSPECTION OF WATER TEMPERATURE SENSOR

MEASURE RESISTANCE OF WATER TEMPERATURE SENSOR

(a) Disconnect the connector.

(b) Using an ohmmeter, measure the resistance between both terminals.

Resistance: Refer to the chart above.

If the resistance is not as specified, replace the sensor.

Vacuum Sensor (Manifold Absolute Pressure Sensor)

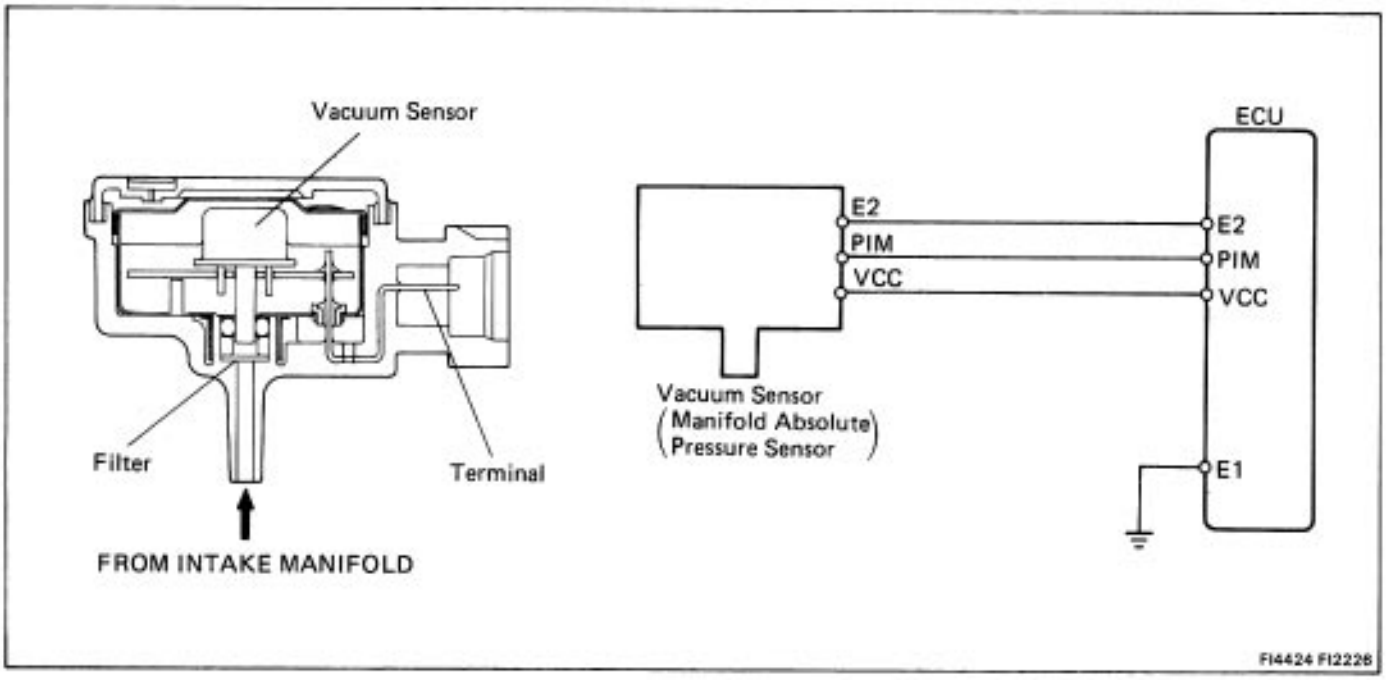

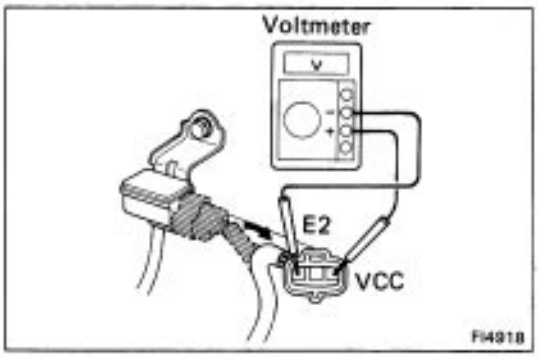

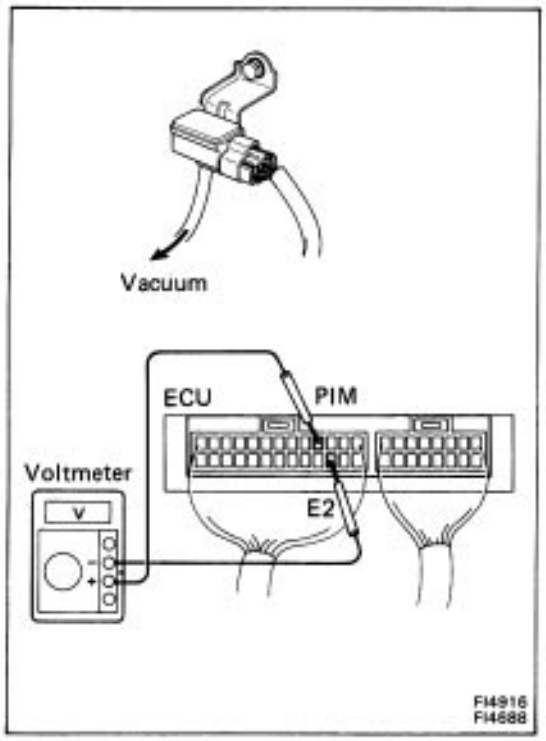

INSPECTION OF VACUUM SENSOR

1. INSPECT POWER SOURCE VOLTAGE OF VACUUM SENSOR

(a) Disconnect the vacuum sensor connector.

(b) Turn the ignition switch ON.

(c) Using a voltmeter, measure the voltage between terminals VCC and E2 of the vacuum sensor connector.

Voltage: 4 – 6 V

2. INSPECT POWER OUTPUT OF VACUUM SENSOR

(a) Turn the ignition switch ON.

(b) Disconnect the vacuum hose of the intake chamber side.

(c) Connect a voltmeter to terminals PIM and E2 of the ECU, and measure the record the output voltage under ambient atmospheric pressure.

(d) Apply vacuum to the vacuum sensor in 100 mmHg (3.94 in.Hg, 13.3 kPa) segments to 500 mmHg (19.69 in.Hg, 66.7 kPa).

(e) Measure voltage drop from step (c) above for each segment.

Voltage drop

Applied Vacuum mmHg (in. Hg, kPa)	100 (3.94 13.3)	200 (7.87 26.7)	300 (11.81 40.0)	400 (15.75 53.3)	500 (19.69 66.7)
Voltage drop V	0.3—0.5	0.7—0.9	1.1—1.3	1.5—1.7	1.9—2.1

Intake Air Temperature Sensor

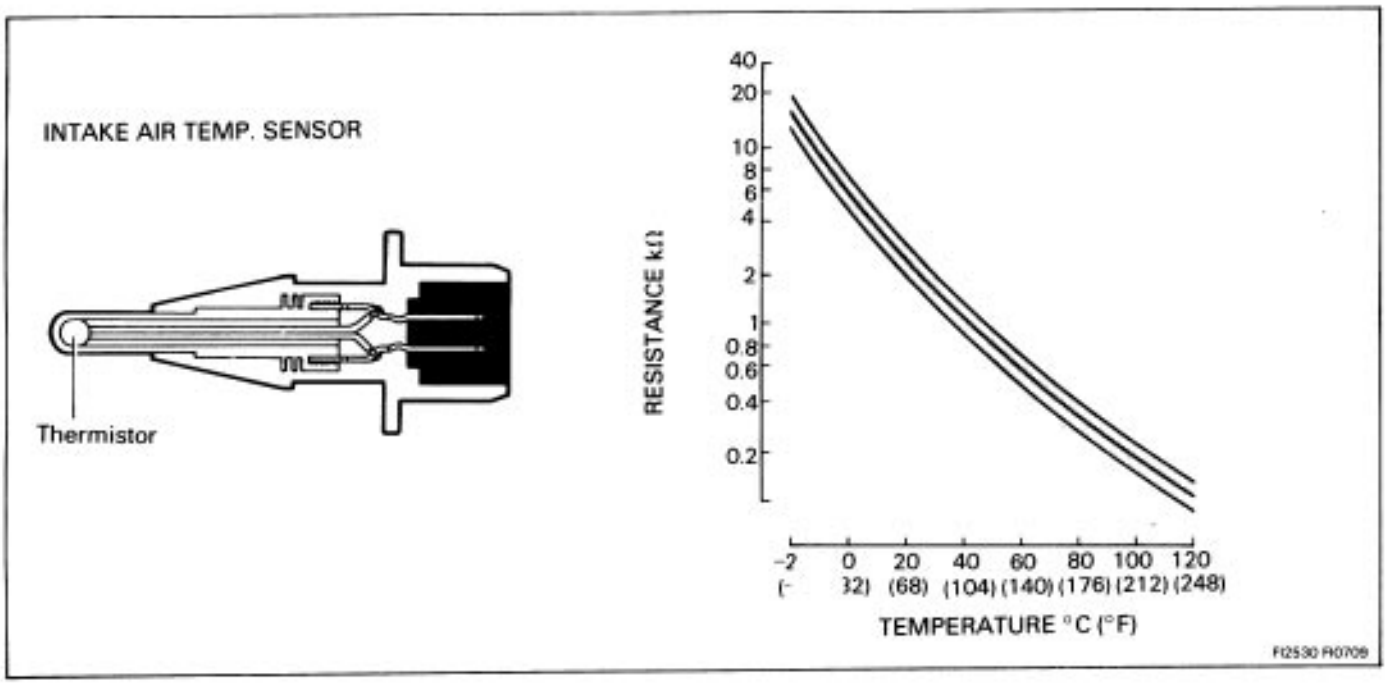

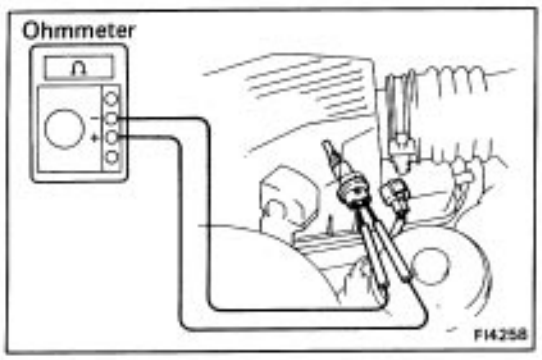

INSPECT OF INTAKE AIR TEMPERATURE SENSOR

INSPECT RESISTANCE OF INTAKE AIR TEMPERATURE SENSOR

Using an ohmmeter, measure the resistance between the terminals.

Resistance: Refer to chart

If the resistance is not as specified, replace the sensor.

Idle Speed Control (ISC) System

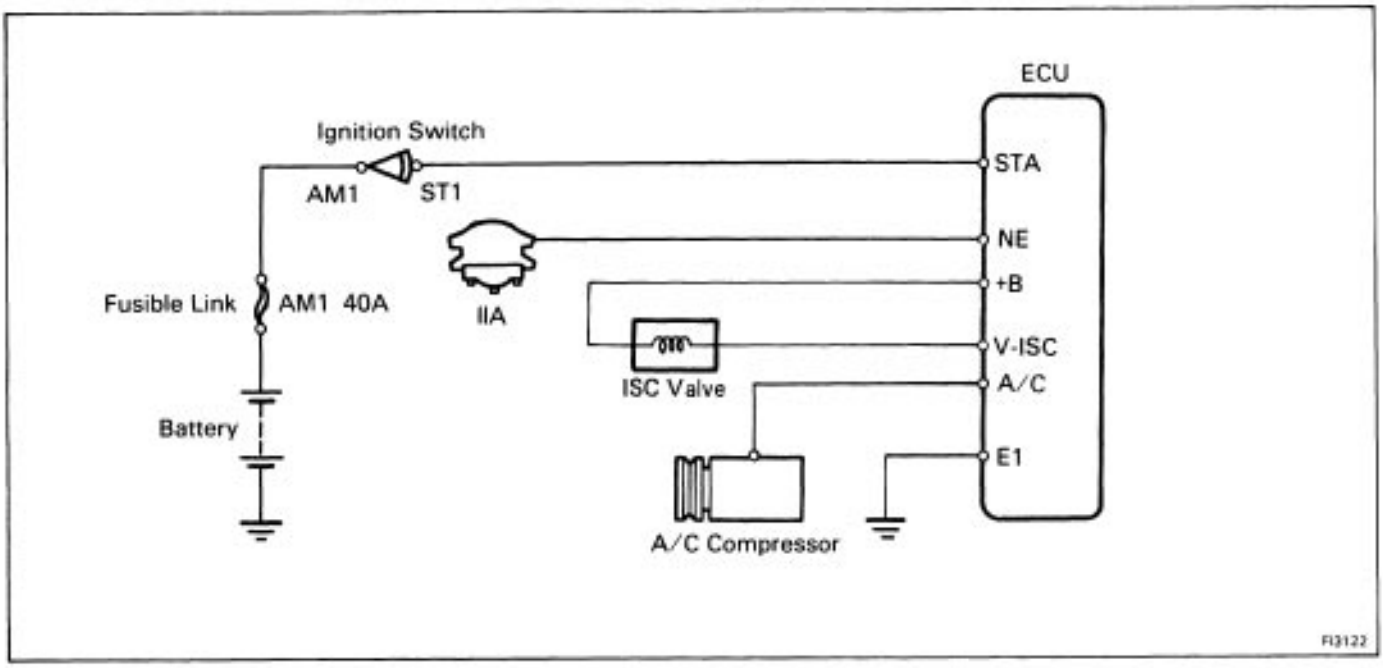

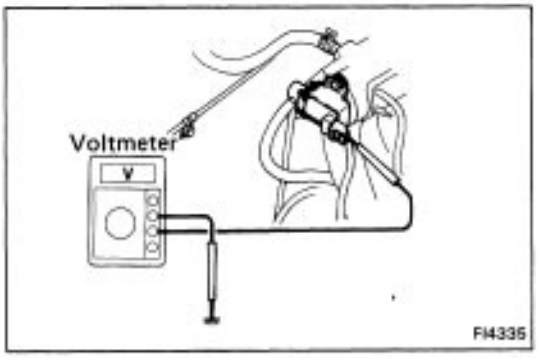

INSPECTION OF ISC VALVE

1. MEASURE BATTERY VOLTAGE OF ISC VALVE

(a) All accessories switched OFF.

(b) Using a voltmeter, check that the meter indicates battery voltage during cranking and for ten seconds after starting.

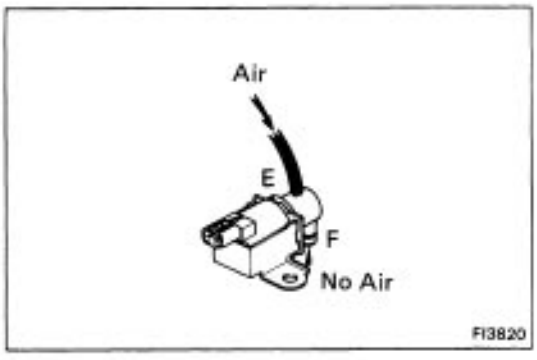

2. INSPECT ISC VALVE OPERATION

(a) Check that air does not flow from pipe E to pipe F.

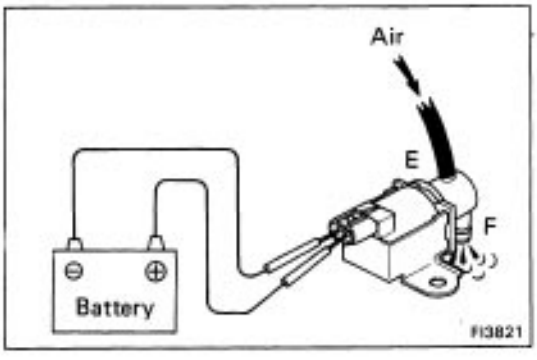

(b) Apply battery voltage across the terminals.

(c) Check that air flows from pipes E to F.

If operation is not as specified, replace the ISC valve.

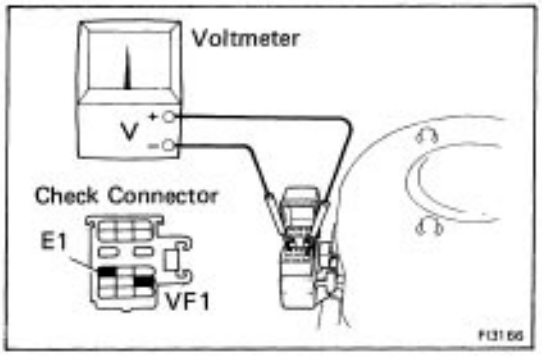

Oxygen Sensor

INSPECTION 0F FEEDBACK VOLTAGE (VF)

1. Warm up the engine.
2. Connect the voltmeter to the check connector terminals VF1 and El.

Warm up the Oxygen sensor with the engine at 2,500 rpm for approx. 120 seconds.

Using SST, connect terminals TE1 and E1 of the check connector.
SST 09843–18020
And maintain engine speed at 2,500 rpm.

Check that the number of times the voltmeter needle fluctuates in 10 seconds.

Less than 8 times

8 times or more

Zero

Replace the ECU

After replacing the oxygen sensor

Warm up the Oxygen sensor with the engine at 2,500 rpm for approx. 120 seconds. And maintain engine at 2,500 rpm.

Normal

Check that the number of times the voltmeter needle fluctuates in 10 seconds.

8 times or more

Zero

Less than 8 times

Disconnect terminals TE1 and E1 of the check connector.
And maintain engine speed at 2,500 rpm.

Measure voltage between terminals VF1 and El.

0 V

More than 0 V

Read and record diagnostic codes.

Normal code and code 21

Malfunction code(s) (ex. code 21)

Repair the relevant diagnostic code.

(1)

②

③

④

CONTINUED ON PAGE FI–78

CONTINUED FROM PAGE FI–77

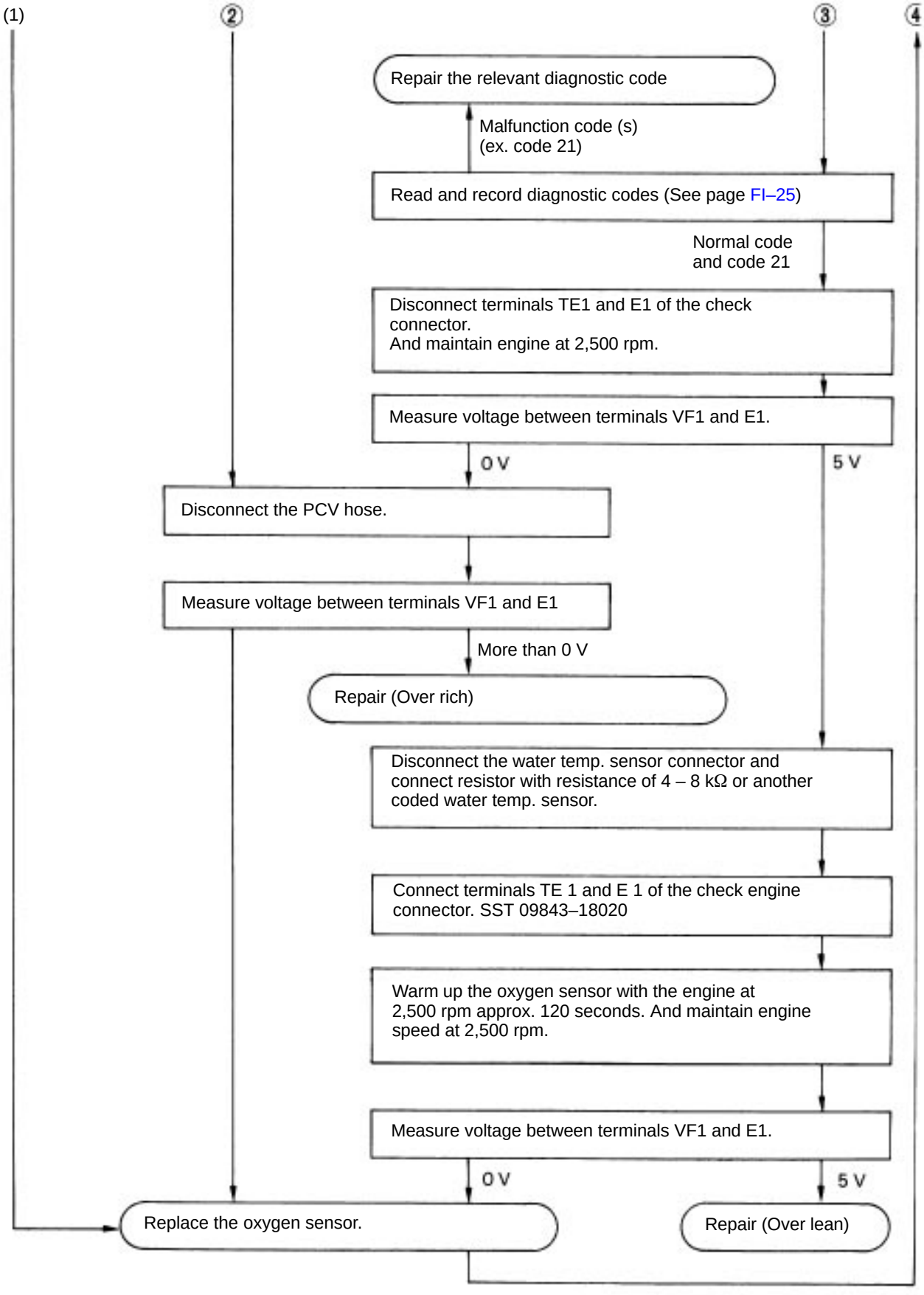

Engine Electronic Controlled Unit (Engine ECU)

INSPECTION OF ENGINE ECU

HINT: The EFI circuit can be checked by measuring the resistance and voltage at the wiring connectors of the ECU.

1. INSPECT VOLTAGE OF ECU

Check the voltage between each terminal of the wiring connectors.

- Turn the ignition switch ON.
- Measure the voltage at each terminal

HINT:

- Perform all voltage measurements with the connectors connected.
- Verify that the battery voltage is 11 V or more when the ignition switch is ON.

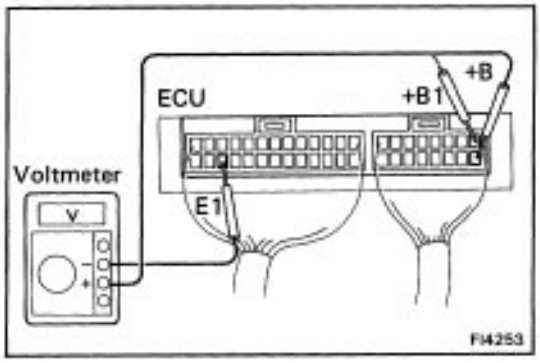

HINT:

1. Perform all voltage measurements with the connectors connected.
2. Verify that the battery voltage is 11 V or above when the ignition switch is on.

Connectors of ECU

Symbol	Terminal	Symbol	Terminal	Symbol	Terminal
E01	Engine ground (Power)	IGT	Igniter	ACT	A/C amplifier
E02	Engine ground (Power)	IDL	Throttle position sensor	—	—
No.10	Injector	THA	Intake air temp. sensor	—	—
No.20	Injector	VCC	Vacuum sensor	—	—
STA	Starter switch	PIM	Vacuum sensor	*1 ELS	Electronic load signal
E1	Engine ground	PSW	Throttle position sensor	SPD	Speedometer sensor
OX	Oxygen sensor	THW	Water temp. sensor	FC	Circuit opening relay
—	—	E2	Sensor ground	A/C	A/C magnet clutch
G⊖	Crank angle sensor	*2 NSW	Neutral start switch	—	—
E21	Sensor ground	*3 O/D	41D solenoid	—	—
G1	Crank angle sensor	*5 EGR	VSV (EGR)	BATT	Battery
NE	Engine revolution sensor	V-ISC	VSV (idle–up)	W	Warning light
IGF	Igniter	T	Check connector	+B1	EFI main relay
*4 THG	EGR gas temp. sensor	VF	Check connector	+B	EFI main relay

ECU Terminals

*1: 2WD M/T, *2: A/T, *3: 4A/T, *4: Calif., *5: Calif. and 4WD

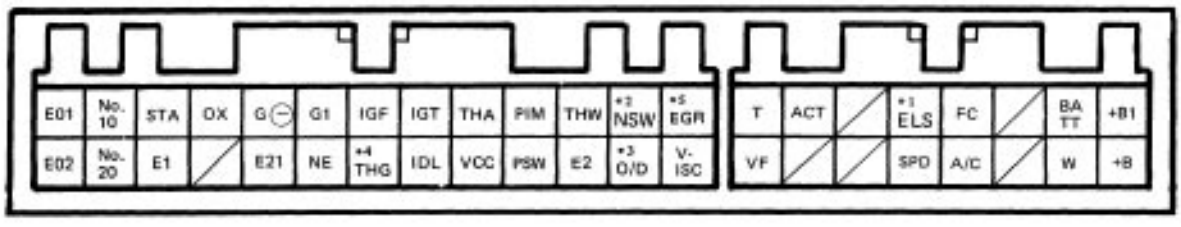

Voltage at ECU Wiring Connectors

Terminals	STD Voltage	Condition	
+ B — E1	10 — 14	Ignition switch ON	
+ B1 — E1			
BATT — E1		—	
IDL — E2	4.5 — 5.5	Ignition switch ON	Throttle valve open
PSW — E2			Throttle valve fully closed
No. 10 — E01 No. 20 — E02	10 — 14	Ignition switch ON	
W — E1	0	Ignition switch ON	
	10 — 14	Engine start	
PIM — E2	3.3 — 3.9	Ignition switch ON	
VCC — E2	4.5 — 5.5		
THA — E2	2.0 — 2.5	Ignition switch ON	Intake air temperature 20˚C (68˚F)
THW — E2	0.4 — 0.7		Coolant temperature 80˚C (1 76˚F)
STA — E1	6 — 14	Cranking	
IGT — E1	0.7 — 1.0	Idling	
A/C — E1	5 — 14	IG switch ON	A/C switch ON
	0		A/C switch OFF
T — E1	10 — 14	IG switch ON	Check connector TE1 – E1 not connect
	0		Check connector TE1 – E1 connect

ECU Terminals

*1 : 2WD M/T, *2 : A/T, *3 : 4A/T, *4 : Calif., *5 : Calif. and 4WD

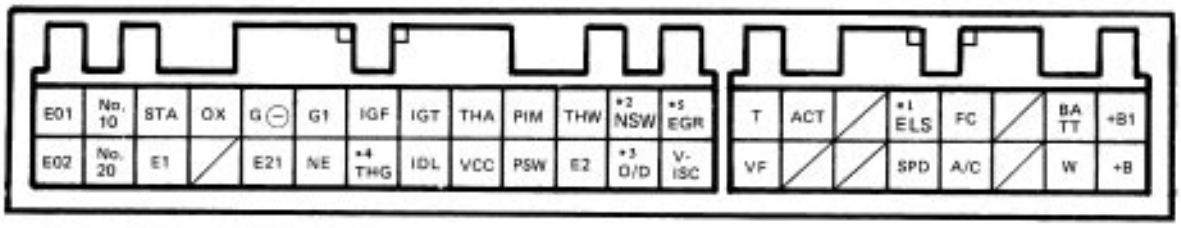

FI4266

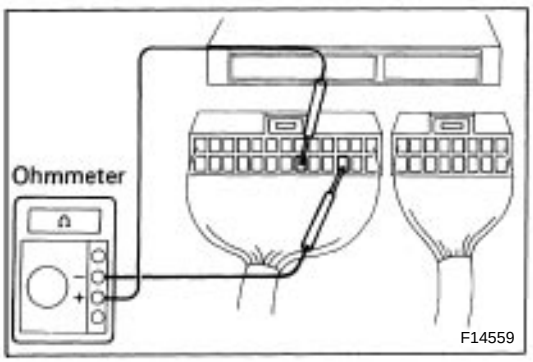

2. MEASURE RESISTANCE OF ECU

NOTICE:

- Do not touch the ECU terminals.
- The tester probe should be inserted into the wiring connector from the wiring side.

Check the resistance between each terminal of the wiring connectors.

- Disconnect the connectors from the ECU.
- Measure the resistance at each terminal.

Resistances at ECU Wiring Connectors

Terminals	Condition	Resistance
IDL — E2	Throttle valve open	Infinity
	Throttle valve fully closed	0
PSW — E2	Throttle valve fully open	0
	Throttle valve fully closed	Infinity
THA — E2	Intake temperature 20˚C (68˚F)	2 — 3 kΩ
THW — E2	Coolant temperature 80˚C (176˚F)	0.2 — 0.4 kΩ
G1 — G ⊖	—	140 — 180 Ω
NE — G ⊖	—	140 — 180 Ω

ECU Terminals

*1 : 2WD M/T, *2 : A/T, * 3 : 4A/T, *4 : Calif., *5 : Calif. and 4WD

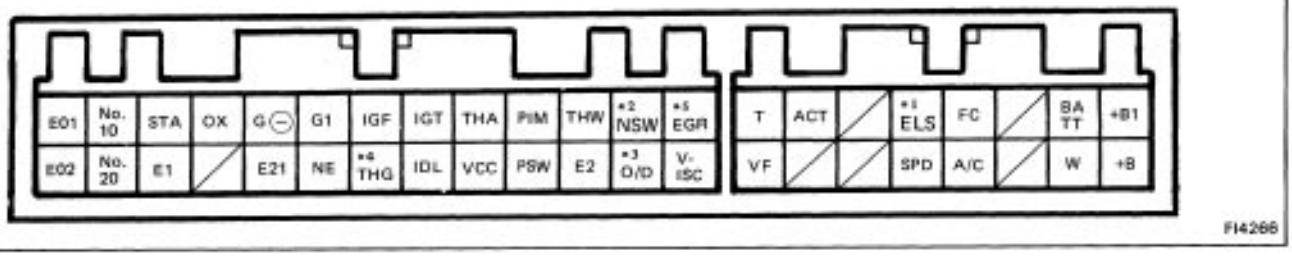

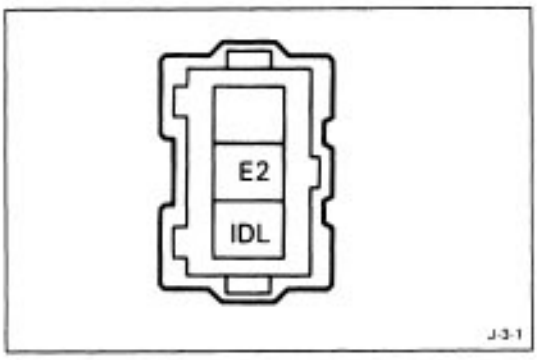

Fuel Cut RPM

INSPECTION OF FUEL CUT PRM

(a) Start and warm up the engine.

(b) Disconnect the throttle position sensor connector from the throttle position sensor.

(c) Connect circuit terminals IDL and E2 on the wire connector side.

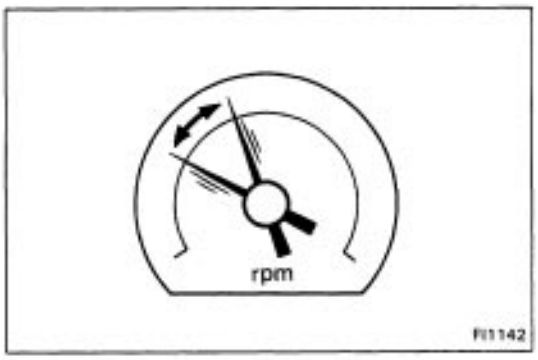

(d) Gradually raise the engine rpm and check that there is fluctuation the fuel cut and fuel return points.
HINT: The vehicle should be stopped.

Fuel cut rpm:	**1,800 rpm (A/C OFF)**
	2,500 rpm (A/C ON)
Fuel return rpm:	**1,200 rpm (A/C OFF)**
	1,700 rpm (A/C ON)

4A–GE ENGINE

DESCRIPTION

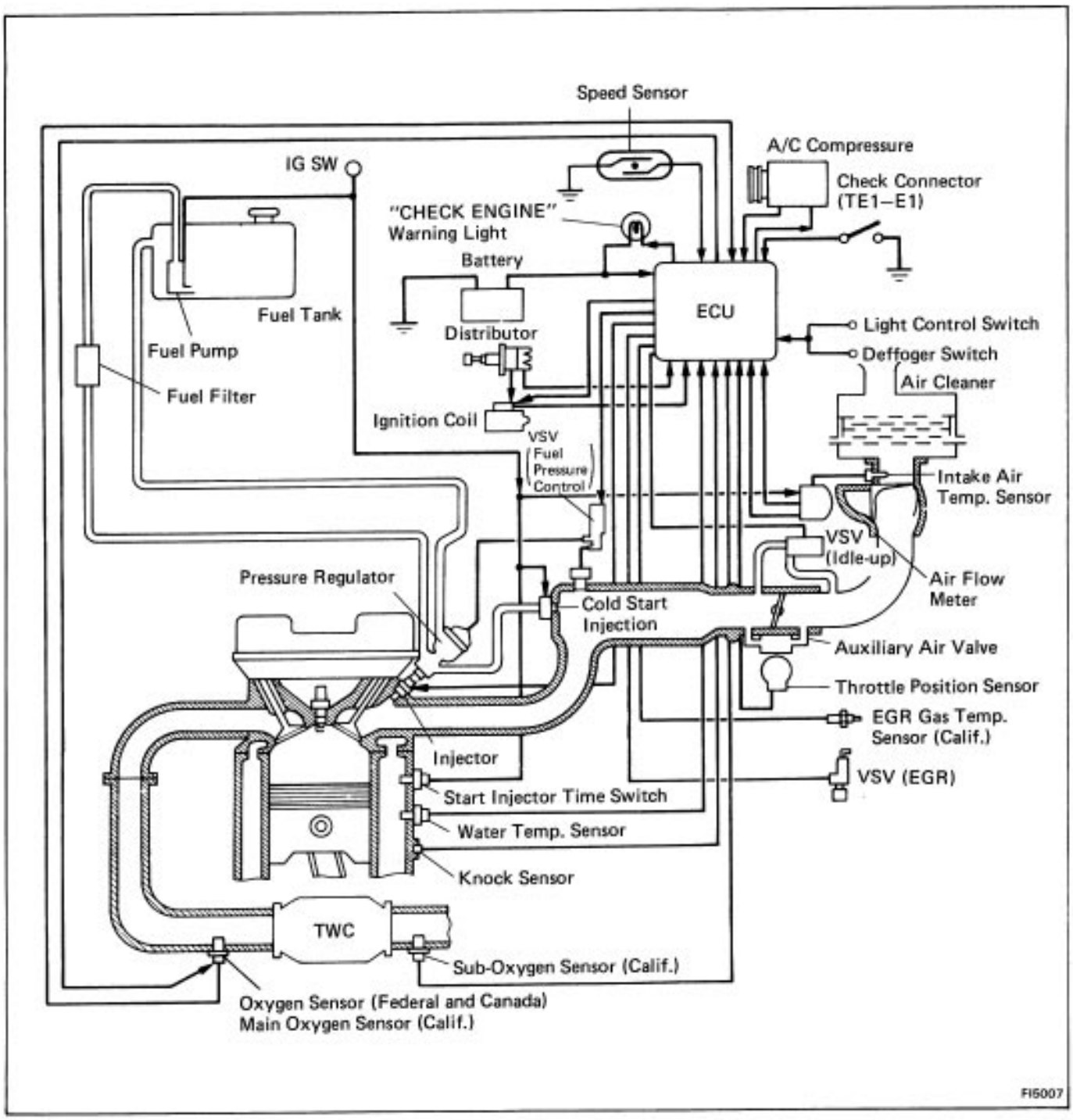

The EFI system is composed of 3 basic subsystems; Fuel, Air Induction and Electronic Control Systems.

FUEL SYSTEM

An electric fuel pump supplies sufficient fuel, under a constant pressure, to the injectors. These injectors inject a measured quantity of fuel into the intake manifold in accordance with signals from the ECU (Electronic Control Unit).

AIR INDUCTION SYSTEM

The air induction system provides sufficient air for engine operation.

ELECTRONIC CONTROL SYSTEM

The 4A–GE engine is equipped with a Toyota Computer Control System (TCCS) which centrally controls the EFI, ESA, Diagnosis systems, etc. by means of an Electronic Control Unit (ECU – formerly EFI computer) employing a microcomputer.

By the ECU, the TCCS controls the following functions:

1. Electronic Fuel Injection (EFI)

The ECU receives signals from various sensors indicating changing engine operating conditions such as:

Exhaust oxygen content
Intake air temperature
Coolant temperature
Engine rpm
Acceleration /deceleration etc.

These signals are utilized by the ECU to determine the injection duration necessary for an optimum air–fuel ratio.

2. Electronic Spark Advance (ESA)

The ECU is programmed with data for optimum ignition timing under any and all operating conditions. Using data provided by sensors which monitor various engine functions (rpm, A/C signal, coolant temperature, etc.), the microcomputer (ECU) triggers the spark at precisely the right instant. (See IG section)

3. Diagnosis

The ECU detects any malfunctions or abnormalities in the sensor network and lights the ”CHECK ENGINE” warning light on the instrument panel. At the same time, the trouble is identified and a diagnostic code is recorded by the ECU. The diagnostic code can be read by the number of blinks of the ”CHECK ENGINE” warning light when both check engine terminals are connect circuited. The diagnostic codes are included later on see page FI–105.

4. Fail–Safe Function

In the event of computer malfunction, a backup circuit will take over to provide minimal drivability. Simultaneously, the ”CHECK ENGINE” warning lamp will light.

PRECAUTIONS

1. Before working the fuel system, disconnect the negative terminal from the battery.
   HINT: Any diagnostic code retained by the computer will be erased when the battery terminal is removed. Therefore, if necessary, read the diagnostic code before removing the battery terminal.
2. Do not smoke or work near an open flame when working the fuel system.
3. Keep gasoline off rubber or leather parts.

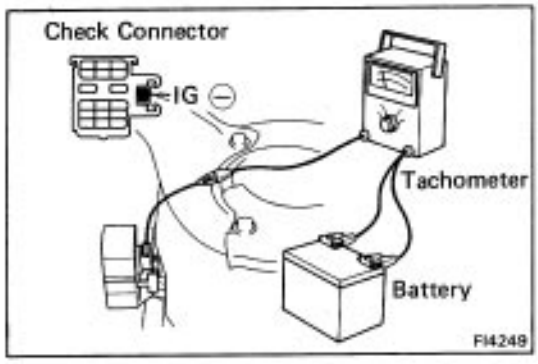

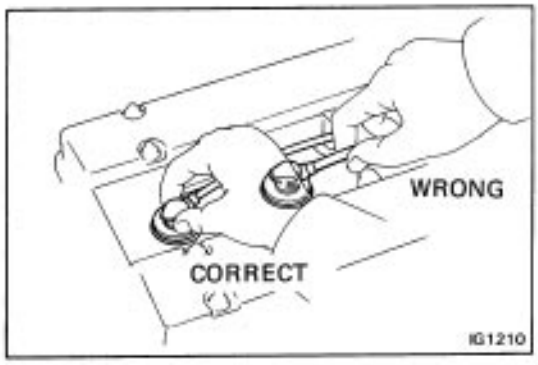

INSPECTION PRECAUTIONS

MAINTENANCE PRECAUTIONS

1. INSURE CORRECT ENGINE TUNE–UP

2. PRECAUTIONS WHEN CONNECTING GAUGE

(a) Connect the tachometer (+) terminal to the terminal IG (–) of the check connector.

(b) Use the battery as the power source for the timing light, tachometer, etc.

3. IN EVENT OF ENGINE MISFIRE THE FOLLOWING PRECAUTIONS SHOULD BE TAKEN

(a) Insure proper connection of battery terminals, etc.

(b) Handle high–tension cords carefully.

(c) After repair work, insure that the ignition coil terminals and all other ignition system lines are reconnected securely.

(d) When cleaning the engine compartment, be especially careful to protect the electrical system from water.

4. PRECAUTIONS WHEN HANDLING OXYGEN SENSOR(S)

(a) Do not allow oxygen sensor to drop or hit against an object.

(b) Do not allow water to come into contact with the sensor or attempt to cool it.

IF CAR IS EQUIPPED WITH MOBILE RADIO SYSTEM (HAM, CB, ETC)

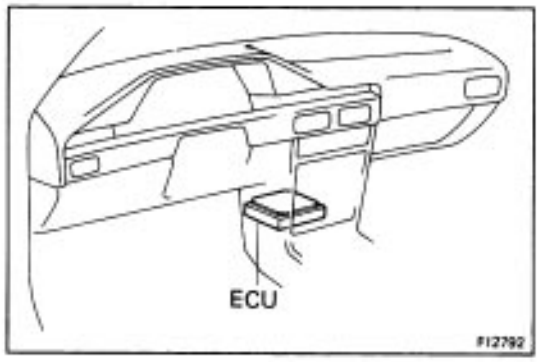

The ECU has been designed so that it will not be affected by outside interference.
However, if your vehicle is equipped with a CB radio transceiver, etc. (even one with about 10 W output), it may, at times, have an effect upon ECU operation, especially if the antenna and feeder are installed nearby.
Therefore, observe the following precautions:

(a) Install the antenna as far as possible from the ECU. The ECU is located behind the center console, so the antenna should be installed in the rear of the vehicle.
(b) Keep the antenna feeder as far away as possible from the ECU wires at least 20 cm (7.87 in.), and do not wind them together.
(c) Insure that the feeder and antenna are properly adjusted.
(d) Do not equip your vehicle with a powerful mobile radio system.
(e) Do not open the cover or the case of the ECU unless absolutely necessary. (If the IC terminals are touched, the IC may be destroyed by static electricity.)

AIR INDUCTION SYSTEM

1 . Make sure that the oil dipstick, oil filler cap, PCV hose, etc., are all securely fitted, otherwise the engine may run out of tune.
2. Disconnection, looseness or cracks in the parts of the air intake system between the air flow meter and cylinder head will allow air suction and cause the engine to run out of tune.

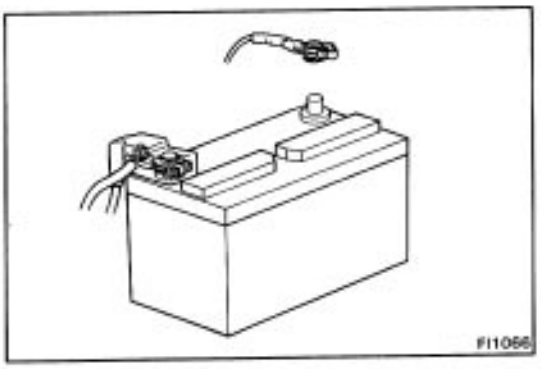

ELECTRONIC CONTROL SYSTEM

1 . Before removing EFI wiring connectors, terminals, etc., first disconnect the power by either turning the ignition switch
OFF or disconnecting the battery terminals.

2. When installing a battery, be especially careful not to incorrectly connect the positive and negative cables.

3. Do not jolt parts during removal or installation. Handle all EFI parts carefully, especially the ECU.

4. Do not be careless during troubleshooting as there are numerous transistor circuits and contact with terminal can cause further troubles.

5. Do not open the ECU cover.

6. When inspecting during rainy weather, take care to prevent entry of water. Also, when washing the engine compartment, prevent water from getting on the EFI parts and wiring connectors.

7. Parts should be replaced as an assembly.

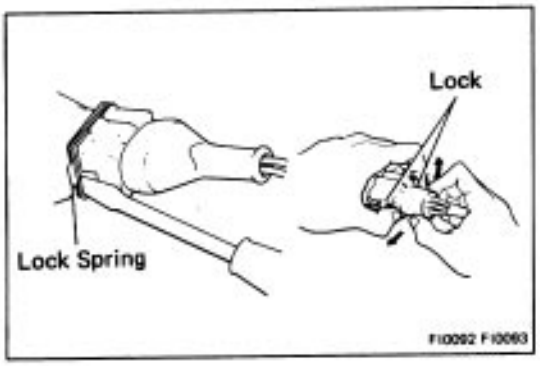

8. Care is required when pulling out and inserting wiring connectors.
(a) Release the lock and pull out the connector.

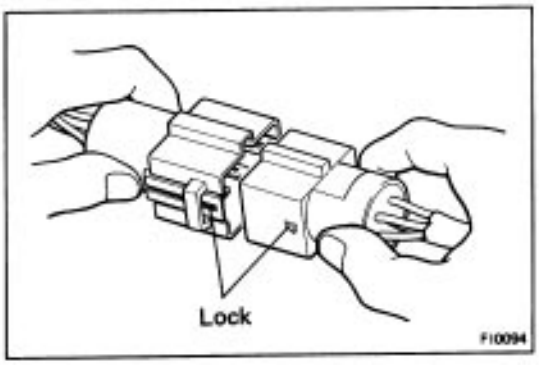

(b) Fully insert the connector and insure that it is locked.

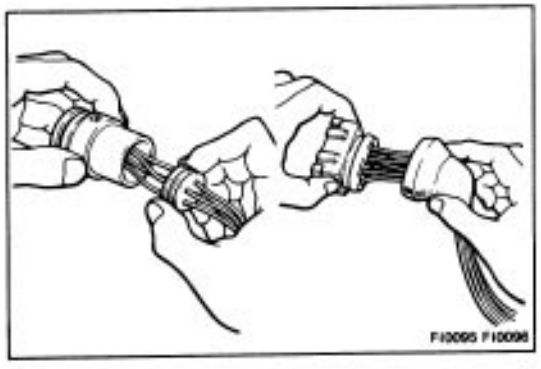

9. When inspecting a connector with a circuit tester.
(a) Carefully take out the water–proofing rubber if it is a water–proof type connector.

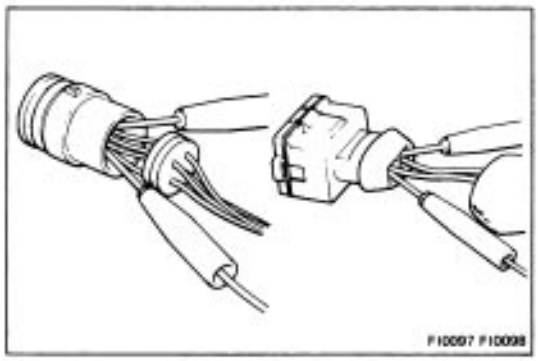

(b) Insert the tester probe into the connector from the wiring side when checking continuity, amperage or voltage.
(c) Do not apply unnecessary force to the terminal.
(d) After checking, install the water–proofing rubber on the connector securely.

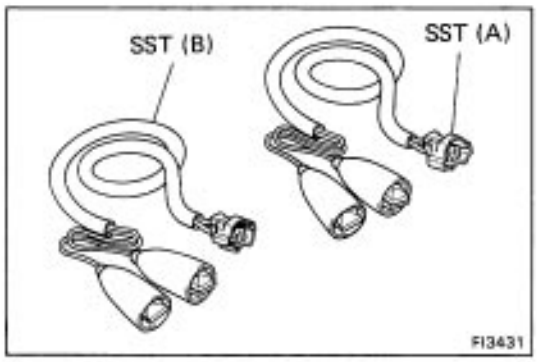

10. Use SST for inspection or testing of the injector, cold start injector or its wiring connector.
SST 09842–30055 (A) and 09842–30070 (B)

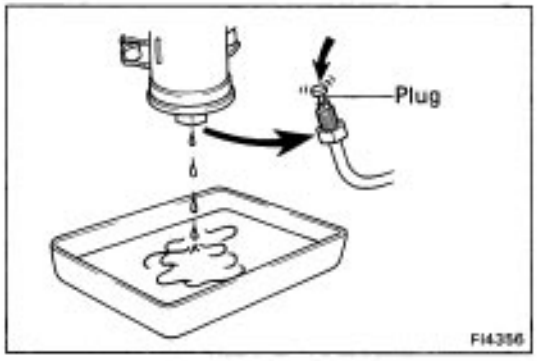

FUEL SYSTEM

1. When disconnecting the high fuel pressure line, a large amount of gasoline will spill out, so observe the following procedure.
(a) Put a container under the connection.
(b) Slowly loosen the connection.
(c) Disconnect the connection.
(d) Plug the connection with a rubber plug.

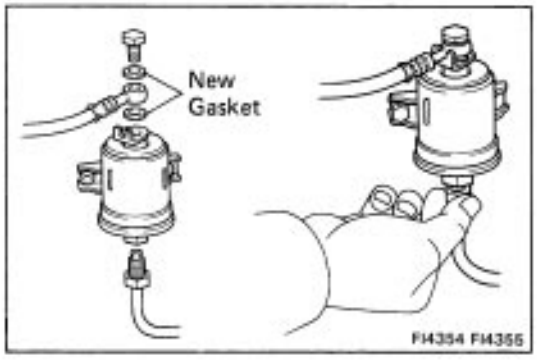

2. When connecting the flare nut or union bolt on the high pressure pipe union, observe the following procedure:
[Union bolt type]
(a) Always use a new gasket.
(b) First tighten the union bolt by hand.
(c) Then tighten the bolt to the specified torque.
Torque: 300 kg–cm (22 ft–lb, 29 N–m)

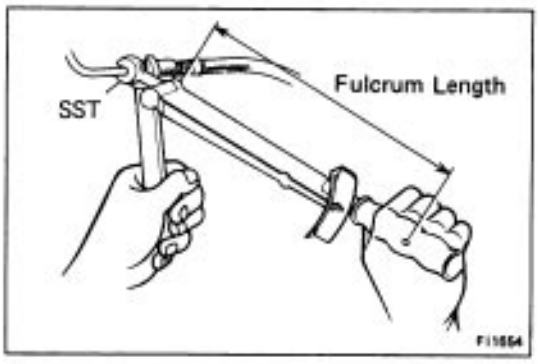

[Flare nut type]
(a) Apply a thin coat of oil to the flare and tighten the flare nut by hand.
(b) Then using SST, tighten the nut to the specified torque.
SST 09631–22020
Torque: 310 kg–cm (22 ft–lb, 30 N–m)
HINT: Use a torque wrench with a fulcrum length of 30 cm (11.81 in.).

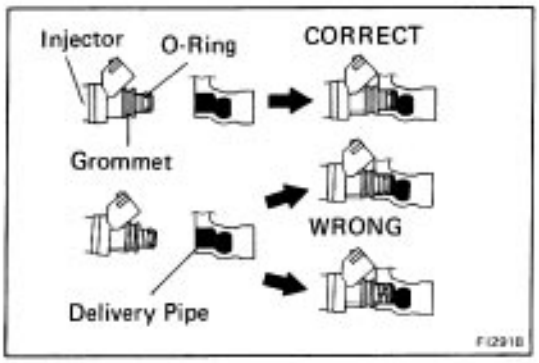

3. Observe the following precautions when removing and installing the injectors.
   (a) Never reuse an 0–ring.
   (b) When placing an O–ring on the injector, take care not to damage it in any way.
   (c) Lubricate the O–ring with spindle oil or gasoline before installing – never use engine, gear or brake oil.

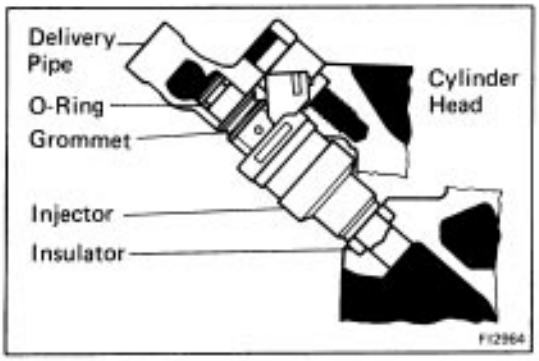

4. Install the injector to the delivery pipe and cylinder head as shown in the illustration.

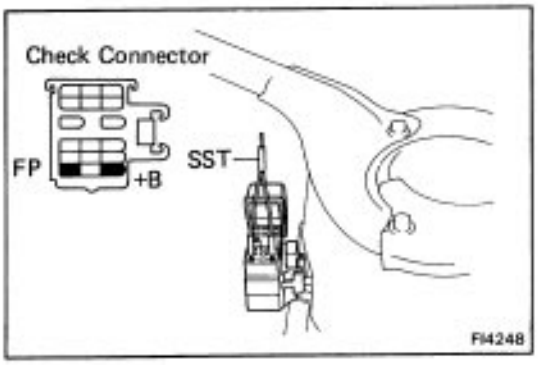

5. Confirm that there are no fuel leaks after performing any maintenance on the fuel system.
   (a) With engine stopped, turn the ignition switch ON.
   (b) Using SST, connect terminals + B and FP of the check connector.
   SST 09843–18020
   HINT: The check connector is located near the air flow meter.

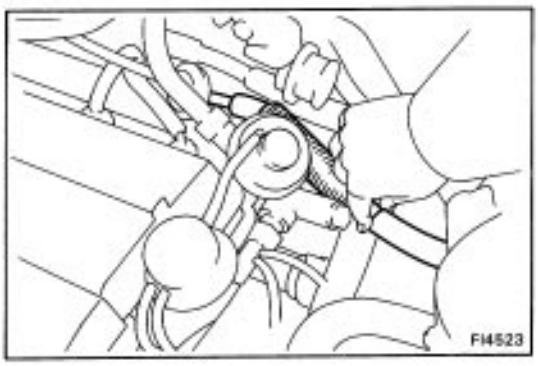

   (c) When the fuel return hose is pinched, the pressure within the high pressure line will rise to about 4 kg/cm2 (57 psi, 392 kPa). In this state, check to see that there are no leaks from any part of the fuel system.
   NOTICE: Always pinch the hose. Avoid bending as it may cause the hose to crack.

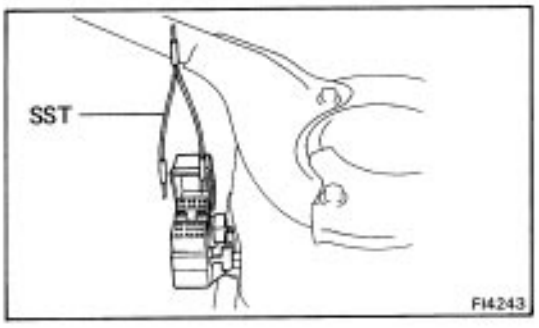

   (d) Remove SST from the check connector.

TROUBLESHOOTING

TROUBLESHOOTING HINTS

1. Engine troubles are usually not caused by the EFI system. When troubleshooting, always first check the condition of the other systems.
   (a) Electronic source
   - Battery
   - Fusible links
   - Fuses

   (b) Body ground
   (c) Fuel supply
   - Fuel leakage
   - Fuel filter
   - Fuel pump

   (d) Ignition system
   - Spark plugs
   - High–tension cords
   - Distributor
   - Igniter and ignition coil

   (e) Air induction system
   - Vacuum leaks

   (f) Emission control system
   - PCV system
   - EGR system

   (9) Others
   - Ignition timing (ESA system)
   - Idle speed
   - etc.

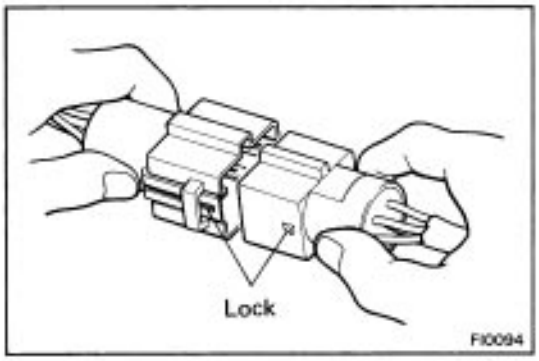

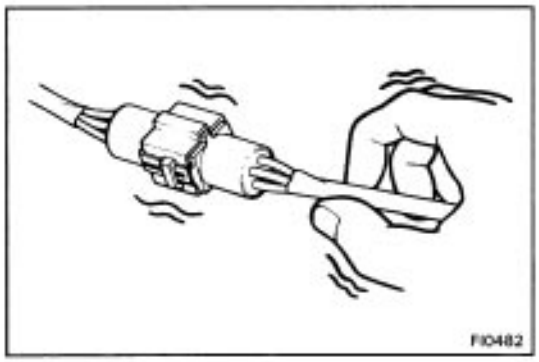

2. The most frequent cause of problems is simply a bad contact in wiring connectors. Always make sure that connections are secure.
   When inspecting the connector, pay particular attention to the following points:
   (a) Check to see that the terminals are not bent.
   (b) Check to see that the connector is pushed in completely and locked.
   (e) Check to see that there is no signal change when the connector is slightly tapped or wiggled.
3. Sufficiently troubleshoot for other causes before replacing the ECU. The ECU is of high quality and is expensive.

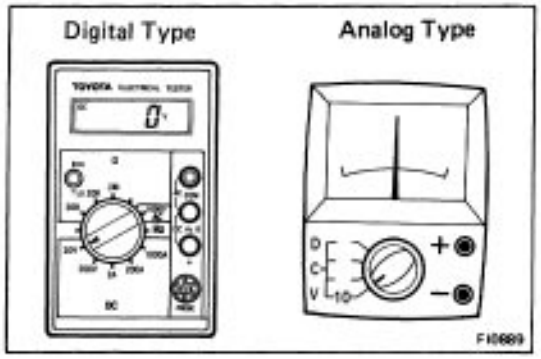

4. Use a volt/ohmmeter with high impedance (10 k /V minimum) for troubleshooting of the electrical circuit. (See page FI–110)

TROUBLESHOOTING PROCEDURES

SYMPTOM – DIFFICULT TO START OR NO START (ENGINE WILL NOT CRANK OR CRANKS SLOWLY)

CHECK ELECTRIC SOURCE → BAD →
1. Battery
   (1) Connection
   (2) Gravity – drive belt–charging system
   (3) Voltage
2. Fusible links

OK ↓

CHECK STARTING SYSTEM → BAD →
1. Ignition switch
2. Clutch start switch
3. Clutch starter relay
4. Starter
5. Wiring/Connection

SYMPTOM – DIFFICULT TO START OR NO START (CRANKS OK)

CHECK DIAGNOSIS SYSTEM
Check for output of diagnosis code.
(See page FI–102)
→ Malfunction code →
Diagnosis code(s)
(See pages FI–105 and 106)

Normal code ↓

CHECK FOR VACUUM LEAKS IN AIR INDUCTION SYSTEM → BAD →
1. Oil dipstick
2. Hose connections
3. PCV hose
4. EGR system – EGR valve stays open
5. Brake booster line
6. Throttle valve adjusting (open stick)

OK ↓

CHECK IGNITION SPARK
1. Unplug connectors of injector and start injector time switch.
2. Check by holding spark plug cord 8 – 10 mm (0.31 – 0.39 in.) away from engine block while cranking engine.
   A strong spark should be noted.
→ BAD →
1. High–tension cords
2. Distributor
3. Ignition coil, igniter

OK ↓

CONTINUED ON PAGE FI–92

OK

CONTINUED FROM PAGE FI–91

CHECK IGNITION TIMING
1. Connect terminals TE 1 and E 1 of the check engine connector.
2. Check ignition timing.
STD: 101 BTDC @ idling (w/ connected TE1 and E1)

NO → Ignition timing – Adjust (See page IG–19)

OK

CHECK FUEL SUPPLY TO INJECTOR
1. Fuel in tank
2. Fuel pressure in fuel line
(1) Connect terminals + B and FP of the check connector.
(2) Fuel pressure at fuel return hose can be felt. (See page FI–127)

BAD →
1. Fuel line – leakage – deformation
2. Fuse
3. Circuit opening relay (See page FI–153)
4. Fuel pump (See page FI–126)
5. Fuel filter
6. Fuel pressure regulator (See page FI–135)

OK

CHECK FUEL PUMP SWITCH IN AIR FLOW METER
Check continuity between terminals FC and E 1 while measuring plate of air flow meter is open.

BAD → Air flow meter (See page FI–144)

OK

CHECK SPARK PLUGS
Plug gap: 0.8 mm (0.031 in.)
HINT:
Check compression pressure and valve clearance if necessary.

NO →
1. Spark plugs (See page IG–10)
2. Compression pressure (See page EM–29)
Limit: 10.0 kg /cm2 (1142 psi, 981 kPa) at 250 rpm
3. Valve clearance (Cold) (See page EM–22)
STD: IN 0.15 – 0.25 mm (0.006 – 0.010 in.)
EX 0.20 – 0.30 mm (0.008 – 0.012 in.)

BAD (All Plugs WET) →
1. Injectors – shorted or leaking
2. Injector wiring(s)
3. Cold start injector – leakage (See page FI–132)
4. Start injector time switch (See page FI– 154)

OK

CHECK AUXILIARY AIR VALVE (See page FI–150)

BAD →
1. Auxiliary air valve
2. Water hoses
3. Air hoses

OK

CHECK INTAKE VALVE

BAD → Intake valve – deposit

OK

CHECK EFI ELECTRONIC CIRCUIT USING VOLT/OHMMETER (See page **FI–108**)

BAD →
1. Wiring connection
2. Power to ECU
(1) Fusible links
(2) Fuses
(3) EFI main relay
3. Air flow meter
4. Water temp. sensor
5. Intake air temp. sensor
6. Injection signal circuit
(1) Injector wiring
(2) ECU

SYMPTOM – ENGINE OFTEN STALLS

CHECK DIAGNOSIS SYSTEM
Check for output of diagnostic code.
(See page FI–102)

Malfunction code(s) → Diagnostic code(s)
(See pages FI–105 and 106)

Normal code ↓

CHECK FOR VACUUM LEAKS IN AIR INTAKE LINE

BAD →
1. Oil dipstick
2. Hose connections
3. PCV hose
4. EGR system – EGR valve stays open

OK ↓

CHECK FUEL SUPPLY TO INJECTOR
1. Fuel in tank
2. Fuel pressure in fuel line
   (1) Connect terminals +B and FP of the check connector.
   (2) You can feel fuel pressure at fuel hose of fuel filter.
   (See page FI–46)

BAD →
1. Fuel line – leakage – deformation
2. Fuse
3. Circuit opening relay (See page FI–153)
4. Fuel pump (See page FI–126)
5. Fuel filter
6. Fuel pressure regulator (See page FI–135)

OK ↓

CHECK AIR FILTER ELEMENT

BAD → Element – Clean or replace

OK ↓

CHECK IDLE SPEED
STD: 800 rpm

NO → Idle speed – Adjust
(See page MA–19)

OK ↓

CHECK IGNITION TIMING
1. Connect terminals TE 1 and E 1 of the check connector.
2. Check ignition timing.
   STD: 10° BTDC @ idling
   (w/ connected TE1 – E1)

NO → Ignition timing – Adjust
(See page IG–19)

OK ↓

CHECK SPARK PLUGS
Plug gap: 0.8 mm (0.031 in.)
HINT:
Check compression pressure and valve clearance if necessary.

NO →
1. Spark plugs (See page IG–10)
2. Compression pressure (See page EM–29)
   Limit: 10.0 kg /cm2 (142 psi, 981 kPa) at 250 rpm
3. Valve clearance (Cold) (See page EM–22)
   STD: IN 0.15 – 0.25 mm (0.006 – 0.010 in.)
   EX 0.20 – 0.30 mm (0.008 – 0.012 in.)

OK ↓

CHECK COLD START INJECTOR
(See page FI–132)

BAD →
1. Cold start injector
2. Start injector time switch. (See page FI–154)

OK ↓

CONTINUED ON PAGE FI–94

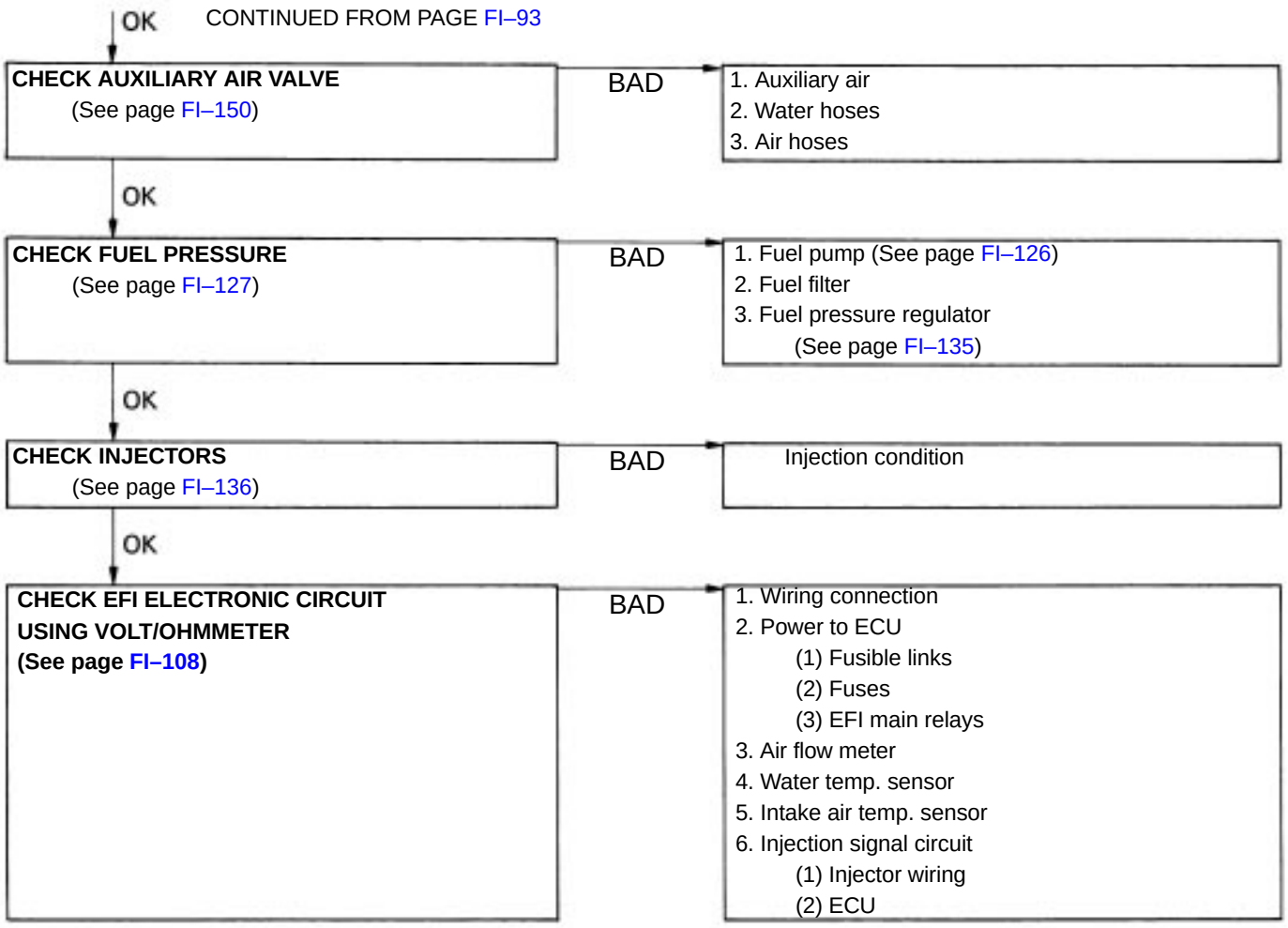

SYMPTOM – ENGINE SOMETIMES STALLS

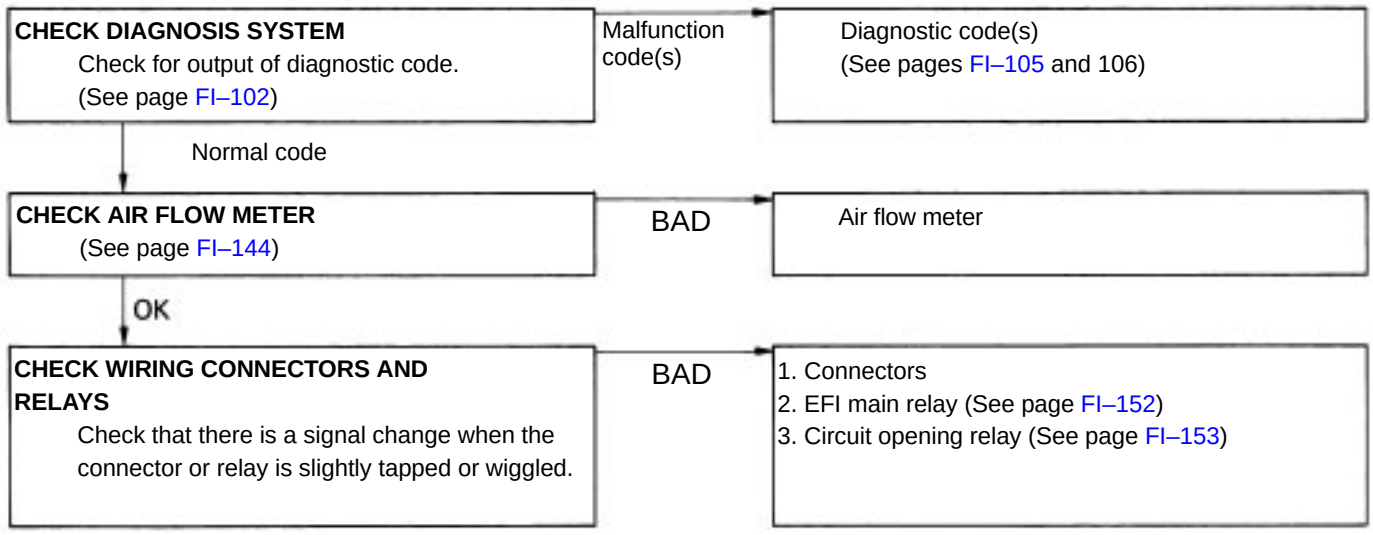

SYMPTOM – ROUGH IDLING AND/OR MISSING

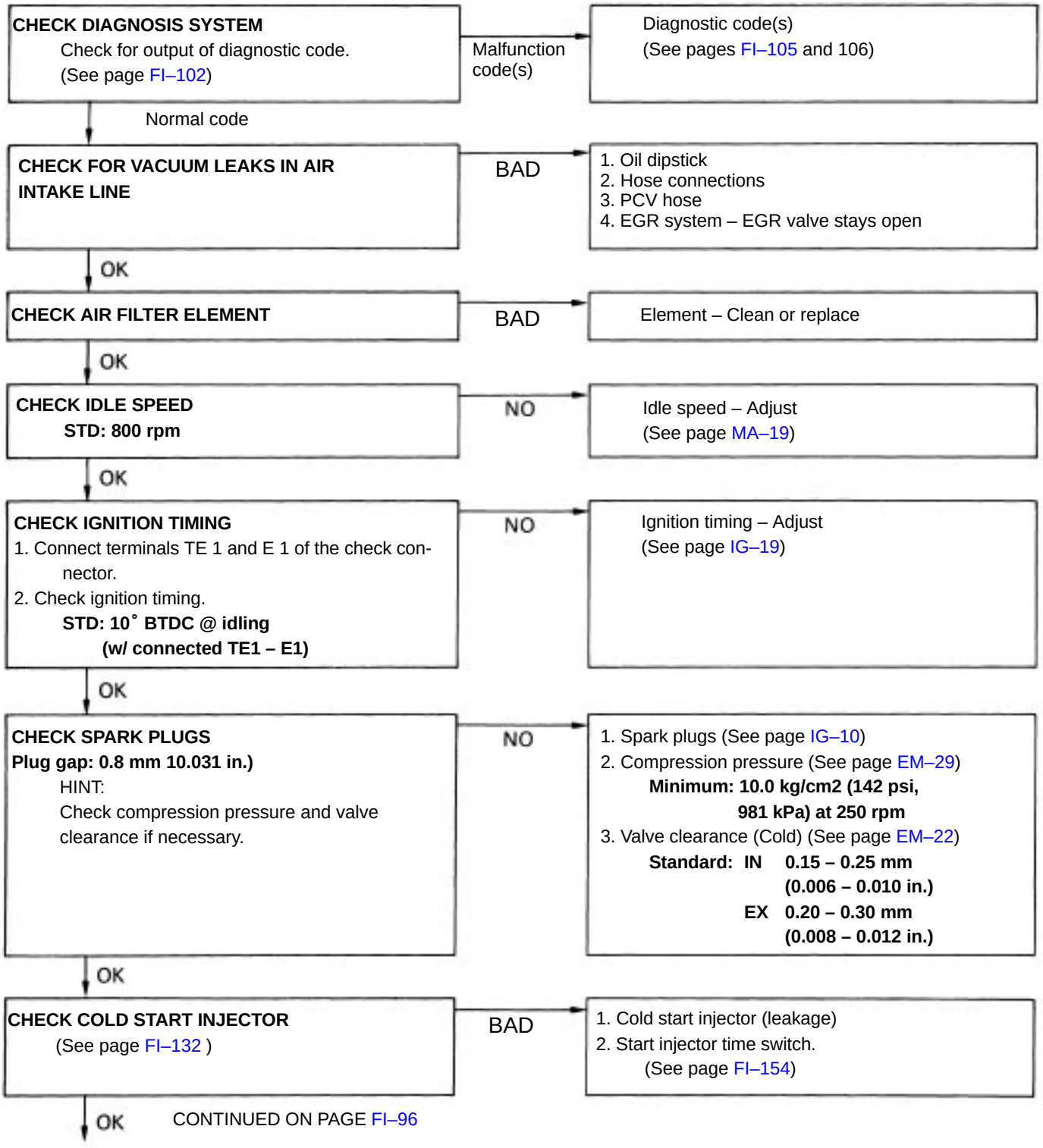

I OK

CONTINUED FROM PAGE FI–95

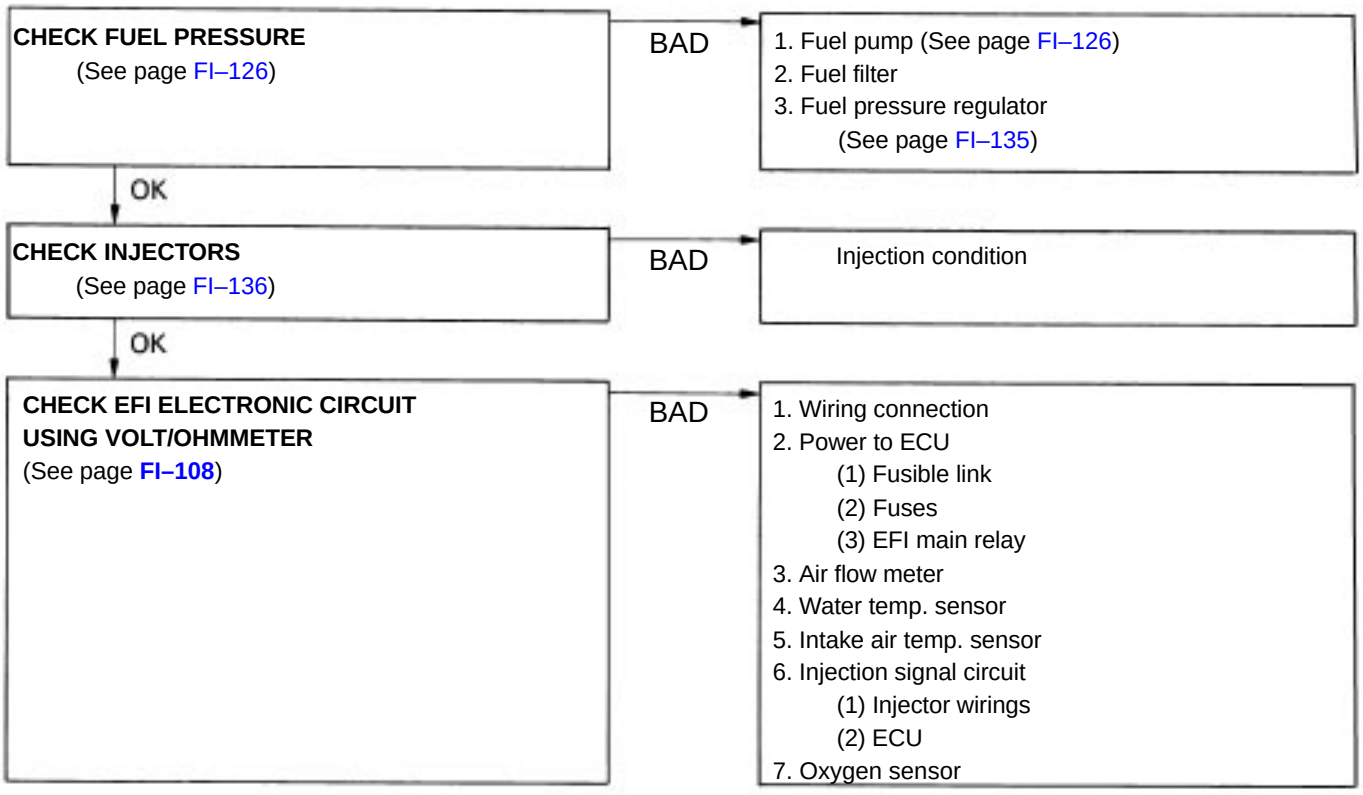

SYMPTOM – HIGH ENGINE IDLE SPEED (NO DROP)

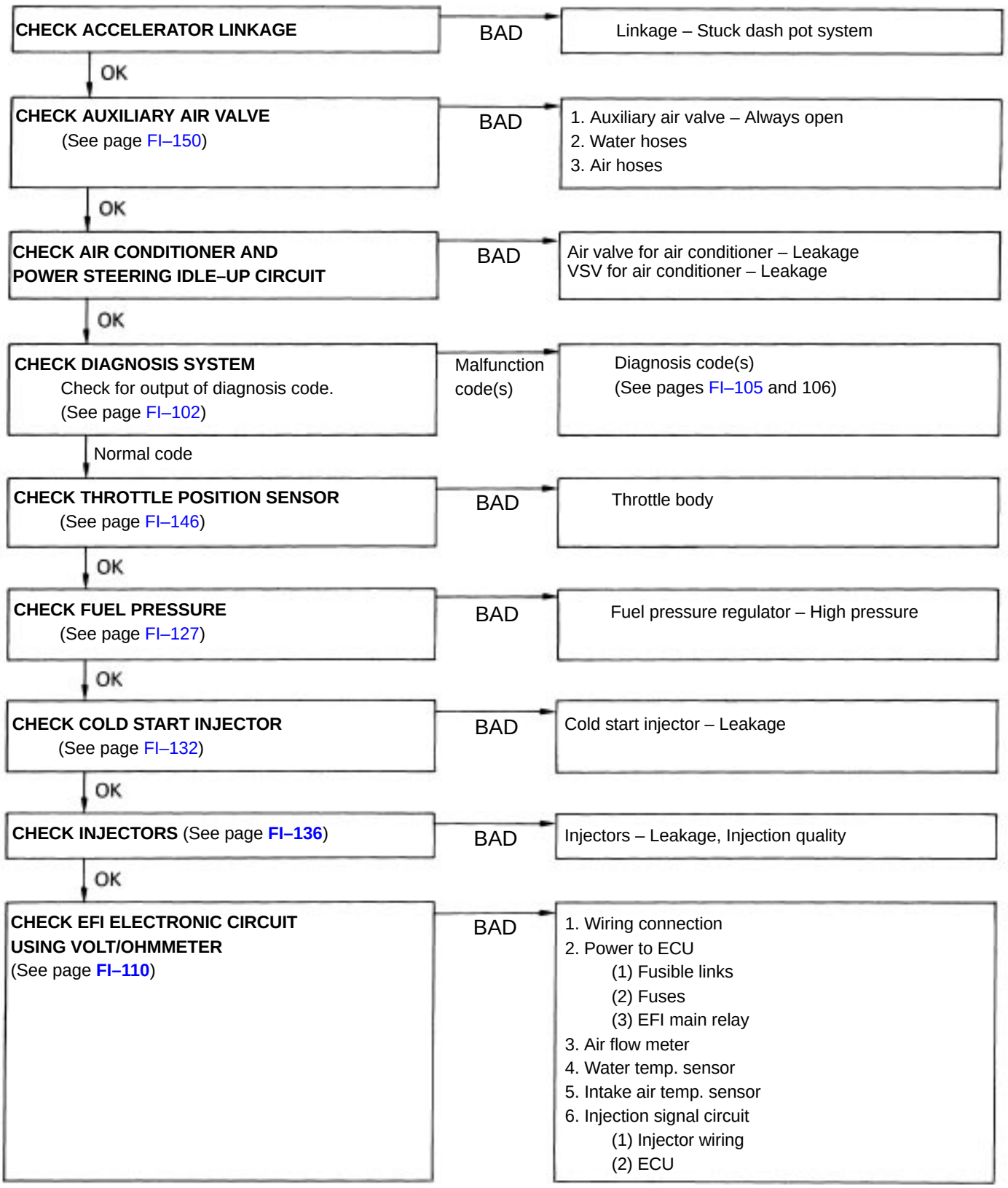

SYMPTOM – ENGINE BACKFIRES–Lean Fuel Mixture

CHECK DIAGNOSIS SYSTEM
Check for output of diagnostic code.
(See page FI–102)

Malfunction code(s) → Diagnostic code(s)
(See pages FI–105 and 106)

Normal code ↓

CHECK FOR VACUUM LEAKS IN AIR INTAKE LINE

BAD →
1. Oil dipstick
2. Hose connections
3. PCV hose
4. EGR system – EGR valve stays open

OK ↓

CHECK IGNITION TIMING
1. Connect terminals TE 1 and E 1 of the check connector.
2. Check ignition timing.
STD: 100 BTDC @ idling
(w/ connected TE1 – E1)

NO → Ignition timing – Adjust
(See page IG–19)

OK ↓

CHECK IDLE SPEED
STD: 800 rpm

BAD → Idle speed – Adjust
(See page MA–19)

OK ↓

CHECK COLD START INJECTOR
(See page FI–132)

BAD →
1. Cold start injector
2. Start injector time switch
(See page FI–154)

OK ↓

CHECK FUEL PRESSURE
(See page FI–127)

BAD →
1. Fuel pump (See page FI–126)
2. Fuel filter
3. Fuel pressure regulator (See page FI–135)

OK ↓

CHECK INJECTORS
(See page FI–136)

BAD → Injectors – Clogged

OK ↓

CHECK EFI ELECTRONIC CIRCUIT USING VOLT/OHMMETER
(See page **FI–110**)

BAD →
1. Wiring connection
2. Power to ECU
(1) Fusible links
(2) Fuses
(3) EFI main relay
3. Air flow meter
4. Water temp. sensor
5. Intake air temp. sensor
6. Throttle position sensor
7. Injection signal circuit
(1) Injector wirings
(2) ECU
(3) Fuel cut RPM (See page FI–164)
8. Oxygen sensor

SYMPTOM – MUFFLER EXPLOSION (AFTER FIRE) –Rich Fuel Mixture–Misfire

CHECK DIAGNOSIS SYSTEM
Check for output of diagnostic code.
(See page FI–102)

Malfunction code (s) → Diagnostic code(s)
(See pages FI–105 and 106)

Normal code ↓

CHECK IGNITION TIMING
1. Connect terminals TE1 and E1 of the check connector.
2. Check ignition timing.
STD: 10° BTDC @ idling
(w/ connected TE1 – E1)

NO → Ignition timing – Adjust
(See page IG–19)

OK ↓

CHECK IDLE SPEED
STD: 800 rpm

NO → Idle speed – Adjust
(See page MA–19)

OK ↓

CHECK COLD START INJECTOR
(See page FI–132)

BAD →
1. Cold start injector
2. Start injector time switch
(See page FI–154)

OK ↓

CHECK FUEL PRESSURE
(See page FI–127)

BAD → Fuel pressure regulator

OK ↓

CHECK INJECTORS (See page FI–136)

BAD → Injectors – Leakage

OK ↓

CHECK SPARK PLUGS
Plug gap: 0.8 mm (0.031 in.)
HINT:
Check compression pressure and valve clearance if necessary.

NO →
1. Spark plugs (See page IG–10)
2. Compression pressure (See page EM–29)
Limit: 10.0 kg /cm2 0 42 psi, 981 kPa)
at 250 rpm
3. Valve clearance (cold) (See page EM–22)
STD: IN 0.15 – 0.25 mm
(0.006 – 0.010 in.)
EX 0.20 – 0.30 mm
(0.008 – 0.012 in.)

OK ↓

CHECK EFI ELECTRONIC CIRCUIT USING VOLT/OHMMETER
(See page **FI–110**)

BAD →
1. Throttle position sensor
2. Injection signal
(1) Injector wiring
(2) Fuel cut RPM (See page FI–164)
(3) ECU
3. Oxygen sensor

SYMPTOM – ENGINE HESITATES AND/OR POOR ACCELERATION

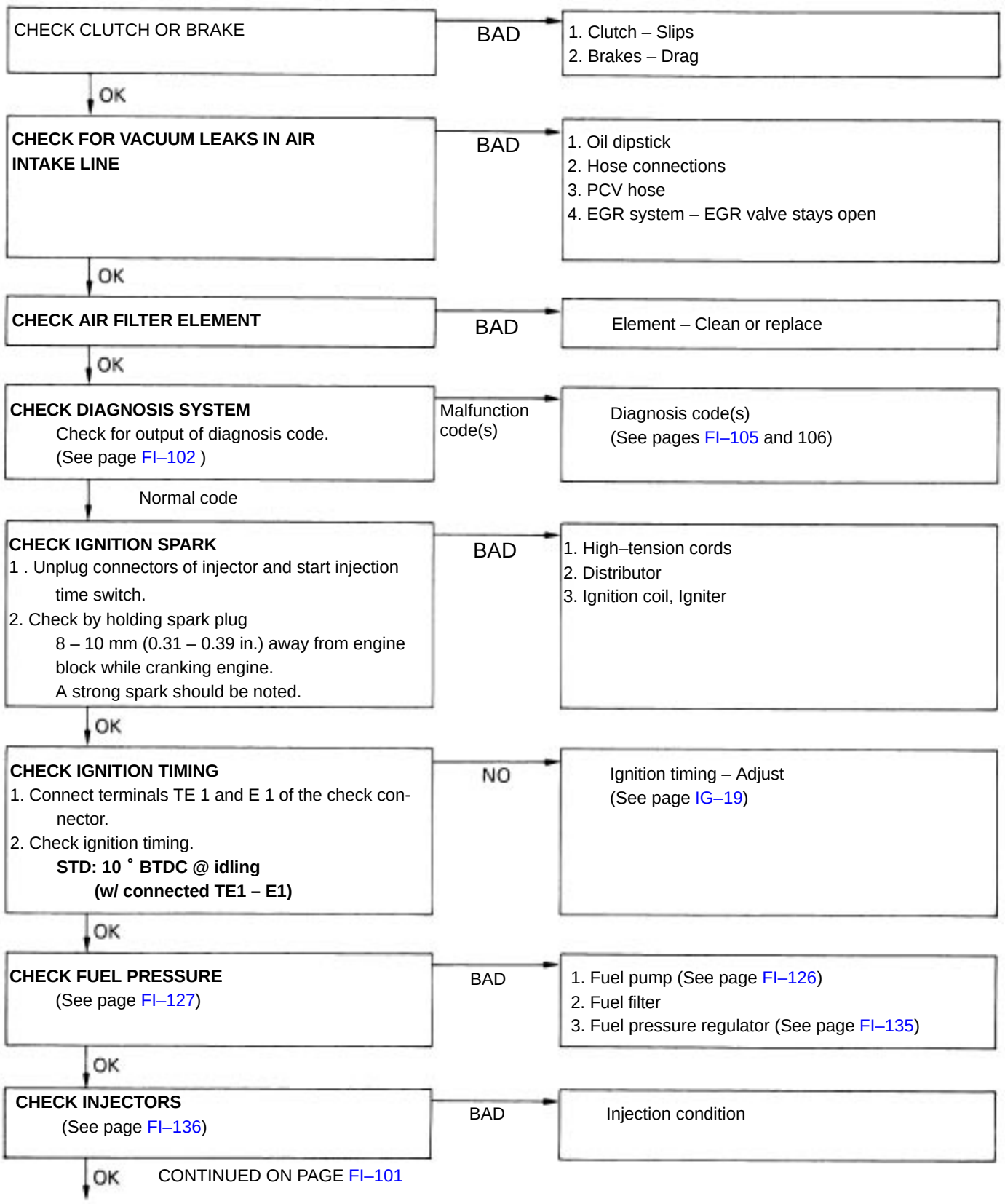

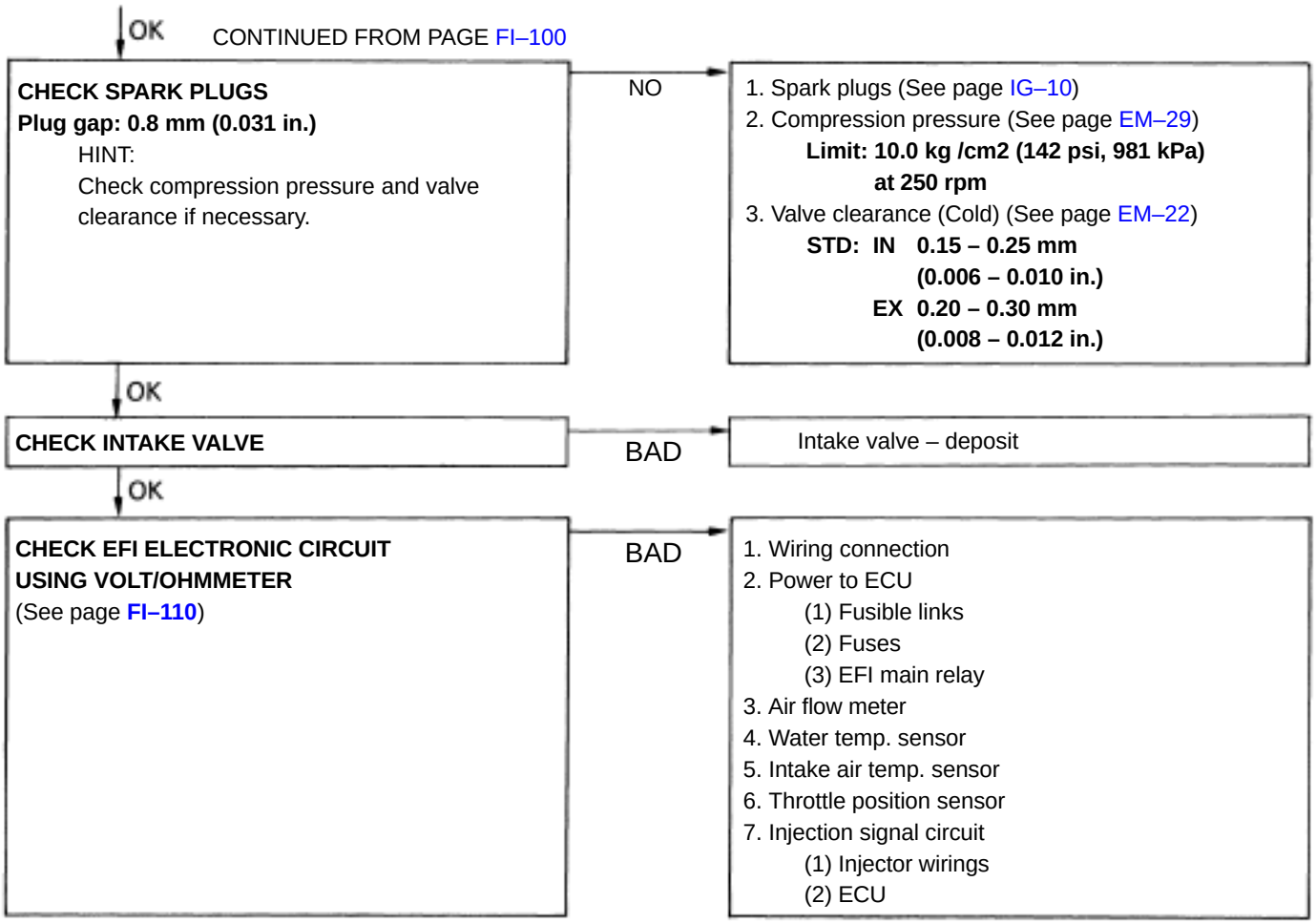
OK
CONTINUED FROM PAGE FI–100
CHECK SPARK PLUGS
Plug gap: 0.8 mm (0.031 in.)
HINT:
Check compression pressure and valve clearance if necessary.
NO
1. Spark plugs (See page IG–10)
2. Compression pressure (See page EM–29)
Limit: 10.0 kg /cm2 (142 psi, 981 kPa) at 250 rpm
3. Valve clearance (Cold) (See page EM–22)
STD: IN 0.15 – 0.25 mm (0.006 – 0.010 in.)
EX 0.20 – 0.30 mm (0.008 – 0.012 in.)
OK
CHECK INTAKE VALVE
BAD
Intake valve – deposit
OK
CHECK EFI ELECTRONIC CIRCUIT USING VOLT/OHMMETER
(See page FI–110)
BAD
1. Wiring connection
2. Power to ECU
(1) Fusible links
(2) Fuses
(3) EFI main relay
3. Air flow meter
4. Water temp. sensor
5. Intake air temp. sensor
6. Throttle position sensor
7. Injection signal circuit
(1) Injector wirings
(2) ECU

DIAGNOSIS SYSTEM

DESCRIPTION

The ECU contains a built–in self–diagnosis system by which troubles with the engine signal network are detected and a ”CHECK ENGINE” warning light on the instrument panel flashes.

By analyzing various signals as shown in the later table (pages FI–105 and 106) the ECU detects system malfunctions which are related to the various operating parameter sensors to actuator. The ECU stores the failure code associated with the detected failure until the diagnostic system is cleared by removing the STOP fuse with ignition switch off.

A ”CHECK ENGINE” warning light on the instrument panel informs the driver that a malfunction has been detected. The light goes out automatically when the malfunction has been cleared.



”CHECK ENGINE” WARNING LIGHT CHECK

1. The ”CHECK ENGINE” warning light will come on when the ignition switch is placed at ON and the engine is not running.
2. When the engine is started, the ”CHECK ENGINE” warning light should go out.
   If the light remains on, the diagnosis system has detected a malfunction or abnormality in the system.

OUTPUT OF DIAGNOSTIC CODES

To obtain an output of diagnostic codes, proceed as follows:

1. Initial conditions
   (a) Battery voltage approx. 12 V
   (b) Throttle valve fully closed (throttle position sensor IDL points closed)
   (c) Transmission in neutral position
   (d) Accessory switches OFF
2. Turn the ignition switch to ON. Do not start the engine.
3. Using SST, connect terminals TE1 and E1 of the check connector.
   SST 09843–18020
   HINT: The check connector is located near the air flow meter.

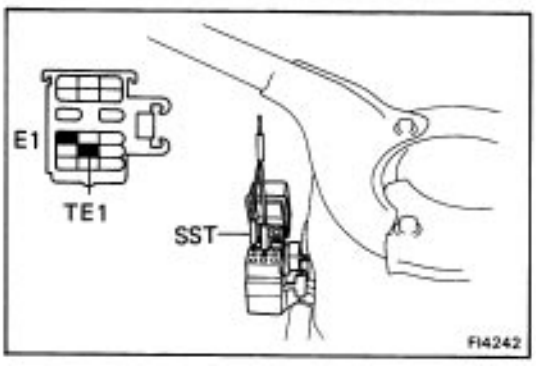

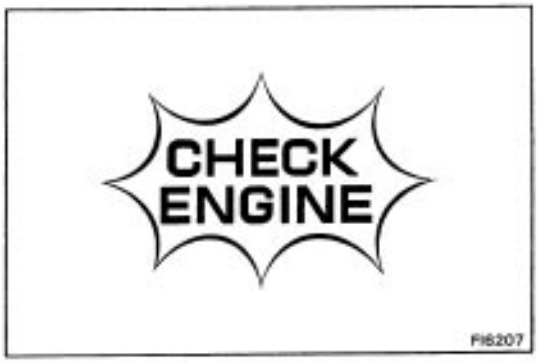

4. Read the diagnosis code as indicated by the number of flashes of the ”CHECK ENGINE” warning light.

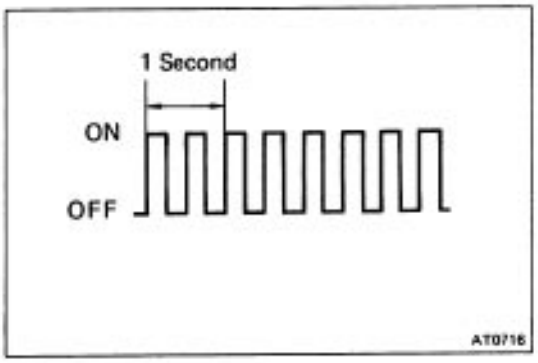

Diagnostic code (See pages FI–105 and 106)
(a) Normal System Operation (no malfunction)

- The light will alternately blink ON and OFF 2 times per second.

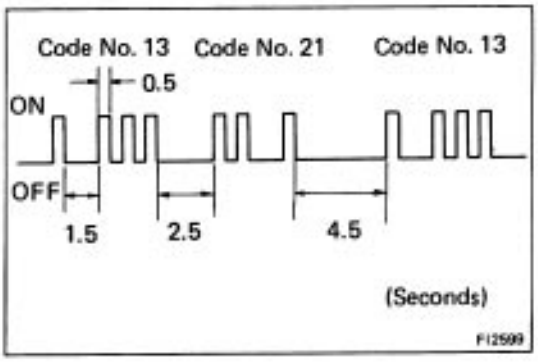

(b) Malfunction Code Indication

- The light will blink a number of times equal to the malfunction code indication as follows:

1. Between the first digit and second digit, 1.5 seconds.
2. Between code and code, 2.5 seconds.
3. Between all malfunction codes, 4.5 seconds.

The diagnostic code series will be repeated as long as the check connector terminal TE 1 and E 1 are connected.

HINT: In event of a number of trouble codes, indication will begin from the small value and continue to the larger in order.

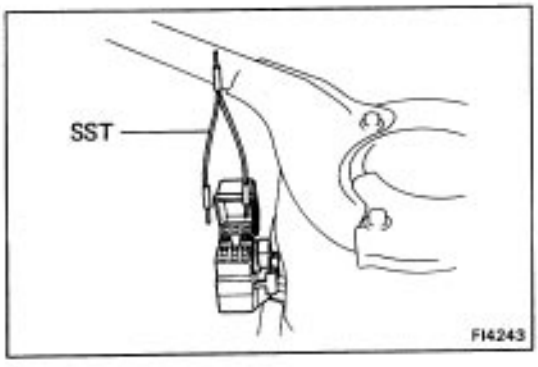

5. After the diagnostic check, remove SST from the check connector.
SST 09843–18020

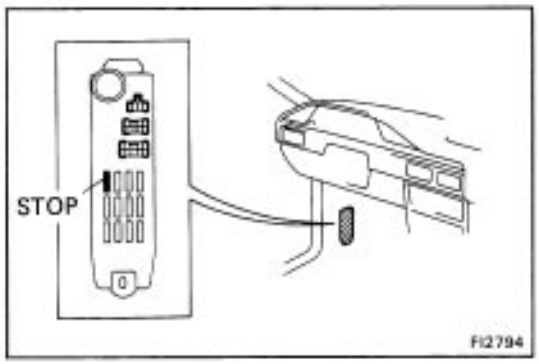

CANCELLING DIAGNOSTIC CODE

1. After repair of the trouble area, the diagnostic code retained in memory by the ECU must be cancelled out by removing the fuse STOP (15 A), located behind driver's kick panel, for 10 seconds or more, depending on ambient on temperature (the lower the temperature, the longer the fuse must be left out) with the ignition switch off.
   HINT:
   - Cancellation can also be done by removing the battery negative (–) terminal, but in this case, other memory systems (clock, etc.) will also be cancelled out.
   - If the diagnostic code is not cancelled out, it will be retained by the ECU and appear along with a new code in event of future trouble.
   - If it is necessary to work engine components requiring removal of the battery terminal, a check must first be made to see if a diagnostic code has been recorded.
2. After cancellation, perform a read test, to confirm that a "normal" code (No.1) is now read on the "CHECK ENGINE" warning light.
   If the same diagnostic code appears, it indicated that the trouble area has not been repaired thoroughly.

DIAGNOSIS INDICATION

1. Including "normal", the ECU is programmed with the following 15 (Federal and Canada) or 17 (California) diagnostic codes.
2. When 2 or more codes are indicated, the lowest number (code) will appear first.
3. All detected diagnostic codes, except 51 and 53, will be retained in memory by the ECU from the time of detection until cancelled out.
4. Once the malfunction is cleared, the "CHECK ENGINE" warning light on the instrument panel will go out but the diagnostic code(s) remain stored in ECU memory (except) for code 51 and 53).

DIAGNOSTIC CODES

Code No.	Number of blinks "CHECK ENGINE"	System	Diagnosis	Trouble area	See page
–	 ON OFF FI1401	Normal	This appears when none of the other codes are identified.	–	–
12	 FI1389	RPM Signal	• No "NE" signal to ECU within 2 seconds after the engine is cranked. • No "G" signal to ECU 2 times in succession when engine speed is between 500 rpm and 4000 rpm.	• Distributor circuit Distributor Starter signal circuit • ECU	IG–3
13	 FI1390	RPM Signal	No "'NE" signal to ECU when the engine speed is above 1500 rpm	• Distributor circuit • Distributor • ECU	
14	 FI1391	Ignition Signal	No "IGF" signal to ECU 4 times in succession.	• Igniter circuit • Igniter • ECU	FI–121
21	 FI1400	Oxygen Sensor Signal/Main Oxygen Sensor Signal	During air–fuel ratio feedback correction, voltage output from the oxygen sensor does not exceed a set value on the lean side and the rich side continuously for a certain period (OXI).	• Oxygen sensor circuit • Oxygen sensor • ECU	FI–123
		Oxygen Sensor Heater Circuit	Open or short circuit oxygen sensor heater signal (HT).	• Oxygen sensor heater circuit • Oxygen sensor heater • ECU	
22	 FI1392	Water Temp. Sensor Signal	Open or short circuit in water temp. sensor signal (THW).	• Water temp. sensor circuit • Water temp. sensor • ECU	FI–119
24	 FI1411	Intake Air Temp. Sensor Signal	Open or short circuit in intake air– temp. sensor signal (THA).	• Intake air temp. sensor circuit • Intake air temp. sensor • ECU	FI–118
*1 25	 FI2562	Air–Fuel Ratio Lean Malfunction	(1) When air–fuel ratio feedback correction value or adaptive control value continues at the upper (lean) or lower (rich) limit for a certain period of time or adaptive control value is not renewed for a certain period of time. (2) When marked variation is detected in engine revolutions for each cylinder during idle switch on and feedback condition. (3) Open or short circuit in oxygen sensor signal (OXI).	• Injector– circuit • Injector • Fuel line pressure • Oxygen sensor circuit • Oxygen sensor Air– flow meter • Water temp. sensor • ECU	
*1 26	 FI2563	Air–Fuel Ratio Rich Malfunction		• Injector circuit • Injector • Fuel line pressure • Cold start injector circuit • Cold start injector • Oxygen sensor circuit • Oxygen sensor • Air flow meter • Water temp. sensor • ECU	FI–123

No. (1) and (2) in the diagnostic contents of codes No. 25 and 26 apply to California specification vehicles only, while (3) applies to all models.

DIAGNOSTIC CODES (Cont'd)

Code No.	Number of blinks "CHECK ENGINE"	System	Diagnosis	Trouble area	See page
*2 27	 FI2617	Sub–Oxygen Sensor Signal	Open or short circuit in sub–oxygen sensor signal (OX 2).	• Sub–oxygen sensor circuit • Sub–oxygen sensor • ECU	FI–123
31	 FI1394	Air Flow Meter Signal	Short circuit between VC and VB, VC and E2, or VS and VC.	• Air flow meter circuit • Air flow meter • ECU	FI–115
41	 FI1396	Throttle Position Sensor Signal	Open or short circuit in throttle position sensor signal (VTA).	• Throttle position sensor circuit • Throttle position sensor • ECU	FI–113
42	 FI1397	Vehicle Speed Sensor Signal	No "SPD" signal for 8 seconds when engine speed is between 2,500 rpm and 4,500 rpm	• Vehicle speed sensor circuit • Vehicle speed sensor • ECU	–
43	 FI1398	Starter Signal	No "STA" signal to ECU until engine speed reaches 800 rpm with vehicle not moving.	• Starter signal circuit • Ignition switch, main relay circuit • ECU	FI–120
52	 FI1618	Knock Sensor Signal	Open or short circuit in knock sensor signal (KNK).	• Knock sensor circuit • Knock sensor • ECU	–
53	 FI1619	Knock Control Signal in ECU	Knock control in ECU faulty.	• ECU	
*2 71	 FI2622	EGR System Malfunction	• EGR gas temp. below predetermined level during EGR operation (THG). • Open circuit in EGR gas temp. sensor signal (THG).	• EGR system (EGR valve, EGR hose etc.) • EGR gas temp. sensor circuit • EGR gas temp. sensor • VSV for EGR • VSV for EGR circuit • ECU	FI–125
51	 FI1399	Switch Condition Signal	No "IDL" signal or –A/C– signal to ECU, with the check terminals TE 1 and E 1 connected.	• A/C switch circuit • A/C switch • A/C amplifier • Throttle position sensor circuit • Throttle position sensor • ECU	FI–122

*2 Applicable only to California specification vehicles.

INSPECTION OF DIAGNOSIS SYSTEM CIRCUIT

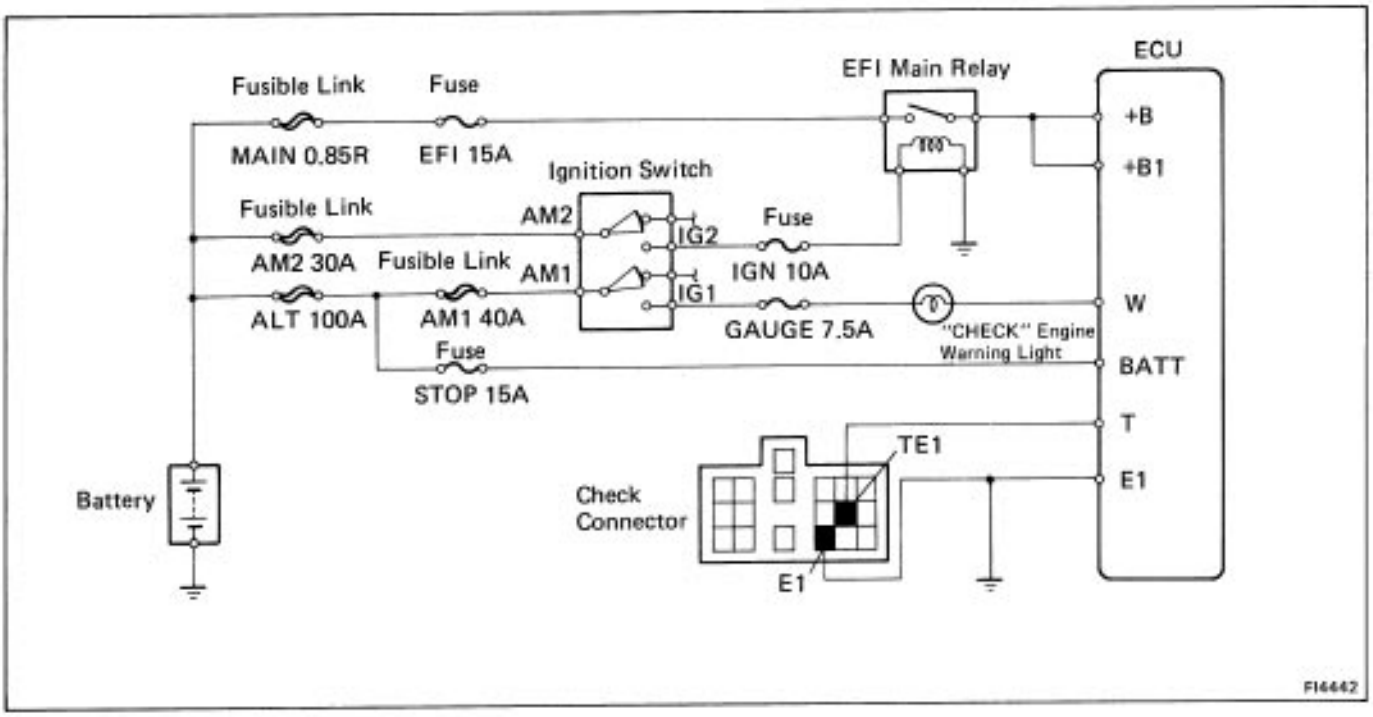

1. Does "CHECK ENGINE" warning light come on when ignition switch is at ON?
   - YES → System Normal
   - NO → Does "CHECK ENGINE" warning light come on when ECU terminal W is grounded to the body?
     - YES → Check wiring between ECU terminal E 1 and body ground.
       - OK → Try another ECU
       - BAD → Repair or replace
     - NO → Check bulb, fuse and wiring between ECU and ignition switch.
       - BAD → Repair or replace

2. Does "CHECK ENGINE" warning light go off when the engine is started?
   - YES → System Normal
   - NO → Check wiring between ECU and "CHECK ENGINE" warning light.
     - BAD → Repair
     - OK → Is there diagnostic code output when both check connector terminals TE1 and E1 are connected?
       - NO → Check wiring between ECU terminal T and check connector terminal TE1, and ECU terminal E1 and check connector terminal El.
         - OK → Try another ECU.
       - YES → Does "CHECK ENGINE" warning light go out after repair according to malfunction code?
         - NO → Further repair required
         - YES → System OK
           - NO → Cancel out diagnosis code.

TROUBLESHOOTING WITH VOLT OHMMETER

PREPARATION FOR TROUBLESHOOTING

1. Remove the ECU cover under the center console.
2. Remove the ECU with the wire harness.

EFI SYSTEM CHECK PROCEDURE

HINT:

1. The EFI circuit can be checked by measuring the resistance and the voltage at the wiring connectors of the ECU.
2. Perform all voltage measurements with the connectors connected.
3. Verify that the battery voltage is 11 V or above when the ignition switch is ON.

Using a voltmeter with high impedance (10 k /N minimum), measure the voltage at each terminal of the wiring connector.

HINT: If there is any problem, see TROUBLESHOOTING FOR EFI ELECTRONIC CIRCUIT WITH VOLT/OHMMETER.

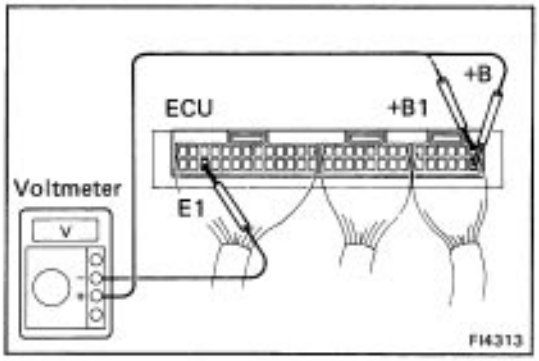

Connectors of ECU

Symbol	Terminal	Symbol	Terminal	Symbol	Terminal
E01	Engine ground (Power)	NE	Engine revolution sensor	THA	Intake air temp. sensor
E02	Engine ground (Power)	G⊖	Engine revolution sensor	VCC	Throttle position sensor
No.10	Injector	IGF	Igniter	VS	Air flow meter
No.20	Injector	EGR	VSV (EGR)	VTA	Throttle position sensor
*2HT	Oxygen sensor heater	STA	Starter switch	VC	Air flow meter
E1	Engine ground	–	–	E2	Sensor ground
–	–	FPU	VSV (Fuel pressure control)	ACT	A/C amplifier
–	–	*1HT	Oxygen sensor heater	–	–
V-ISC	VSV (idle–up)	VF	Check connector	STP	Stop light switch
IGT	Igniter	E21	Sensor ground	SPD	Speedometer sensor
–	–	*1OX⊕	Oxygen sensor	–	–
–	–	T	Check connector	A/C	A/C magnet clutch
–	–	OX1	Main oxygen sensor	–	–
–	–	KNK	Knock sensor	–	–
–	–	*2OX2	Sub–oxygen sensor	BATT	Battery
–	–	*2THG	EGR gas temp. sensor	W	Warning light
G⊕	Engine revolution sensor	THW	Water temperature sensor	+B1	EFI main relay
–	–	IDL	Throttle position sensor	+B	EFI main relay

ECU Terminals

*1: Federal and Canada, *2: California

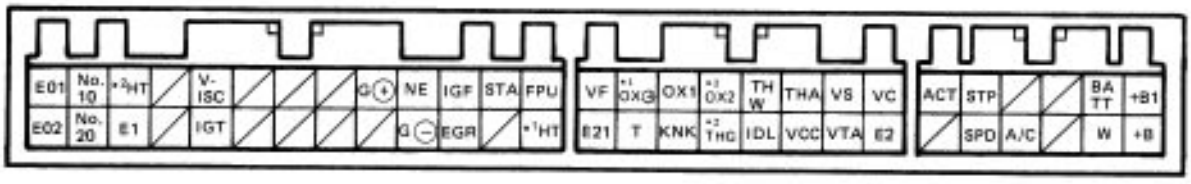

FI4265

Voltage at ECU wiring connectors

No.	Terminals	STD voltage (V)	Condition		See page
1	+B, +B1 – E1	10 – 14	Ignition switch ON		FI–111
2	BATT – E1	10 – 14			FI–112
3	IDL – E2	10 – 14	Ignition switch ON	Throttle valve open	FI–113
	VTA – E2	0.1 – 1.0		Throttle valve fully closed	
		4 – 5		Throttle valve fully open	
	VCC – E2	4 – 6		—	
4	+B1 – E2	10 – 14	Ignition switch ON	—	FI–115
	VC – E2	6 – 10			
	VS – E2	2 – 5.5		Measuring plate fully closed	
		6 – 9		Measuring plate fully open	
		2 – 8	Idling	—	
5	No.10, No.20 – E01, E02	10 – 14	Ignition switch ON		FI–116
6	W – E1	10 – 14	No trouble (”CHECK ENGINE” warning light off) and engine running		FI–117
7	THA – E2	1 – 3	Ignition switch ON	Intake air temperature 20˚C (68˚F)	FI–118
8	THW – E2	0.1 – 1.0	Ignition switch ON	Coolant temperature 80 ˚C (176˚F)	FI–119
9	STA – E1	6 – 14	Cranking		FI–120
10	IGT – E1	0.7 – 1.0	Idling		FI–121
11	A/C – E1	5 – 14	Air conditioning ON		FI–122

ECU Terminals

*1 : Federal and Canada, *2 : California

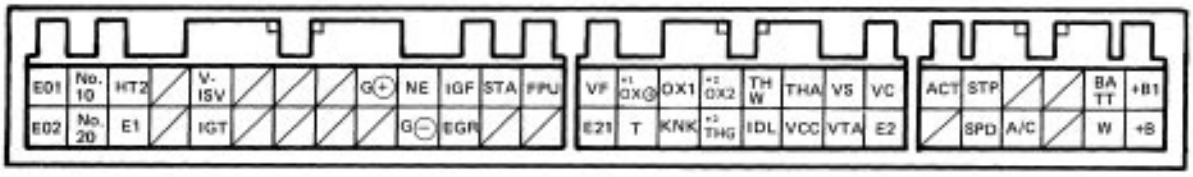

FI4265

TROUBLESHOOTING EFI ELECTRONIC CIRCUIT WITH VOLT OHMMETER

HINT: The following troubleshooting procedures are designed for inspection of each separate system, therefore, the procedure may vary somewhat. However, troubleshooting should be performed while referring to the inspection methods described in this manual.
Before beginning inspection, it is best to first make a simple check of the fuses, fusible links and the condition of the connectors.

The following troubleshooting procedures are based on the supposition that the trouble lies in either a short or open circuit in a component outside the computer or a short circuit within the computer. If engine trouble occurs even through proper operating voltage is detected in the computer connector, then if can be assumed the computer is faulty and should be replaced.

LOCATION OF FUSES AND FUSIBLE LINKS

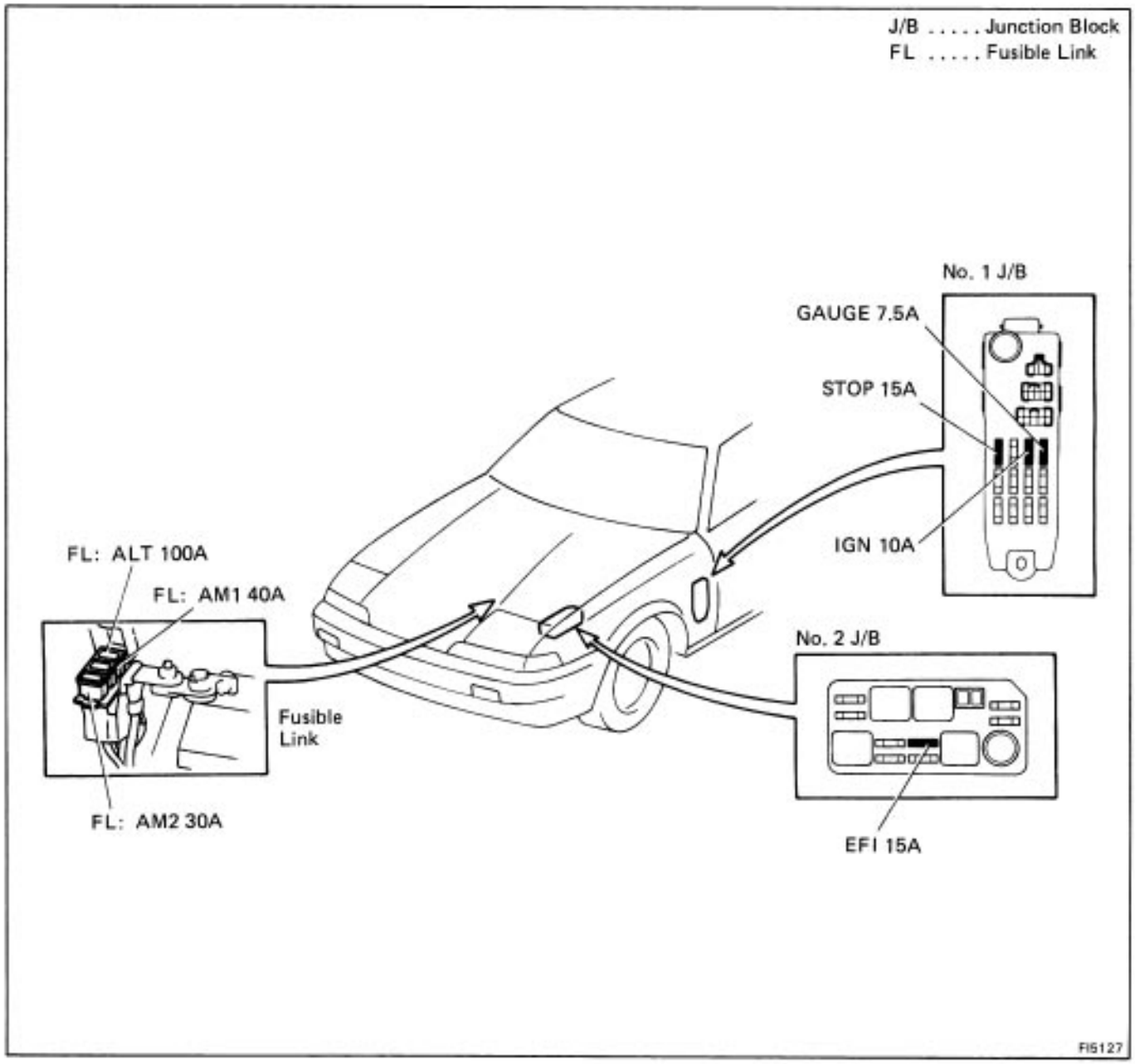

No.	Terminal	Trouble	Condition	STD voltage
1	+B, +B1 – E1	No voltage	IG SW ON	10 – 14 V

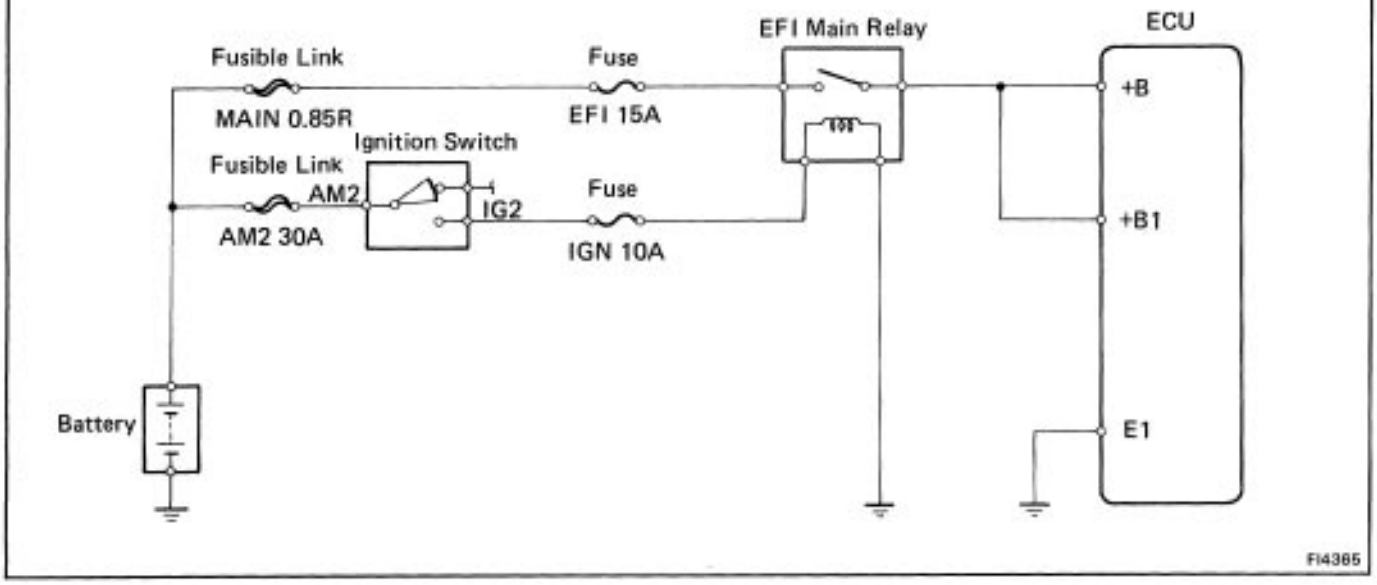

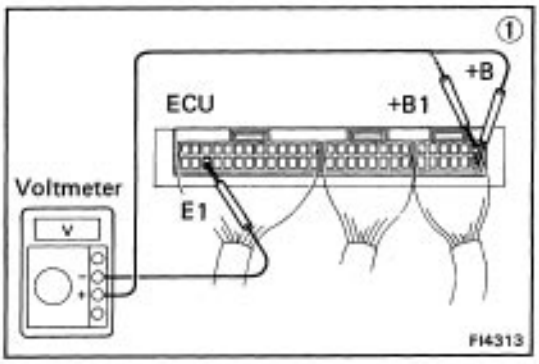

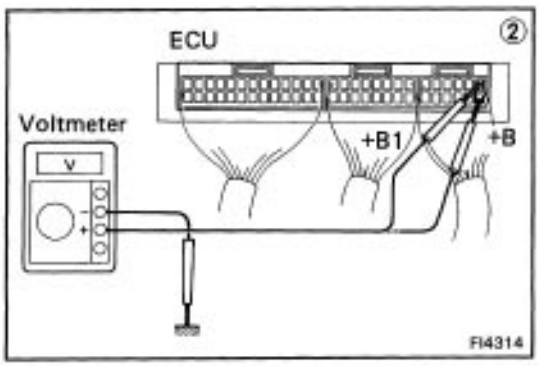

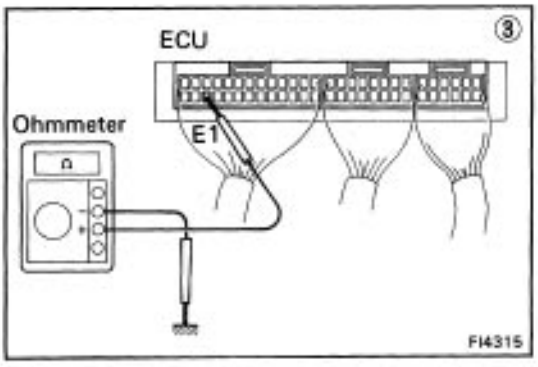

① There is no voltage between ECU terminals +B (+B1) and El. **(IG SW ON)**

↓

② Check that there is voltage between ECU terminal +B (+B1) and body ground. **(IG SW ON)**

NO → OK

③ Check wiring between ECU terminal E 1 and body ground.

OK → Try another ECU.

BAD → Repair or replace.

Check fuses, fusible links and ignition switch. → BAD → Repair or replace.

↓ OK

Check EFI main relay. (See page FI–152) → BAD → Replace.

↓ OK

Check wiring between EFI main relay and battery. → BAD → Repair or replace.

No.	Terminal	Trouble	Condition	STD voltage
2	BATT – E1	No voltage	–	10 – 14 V

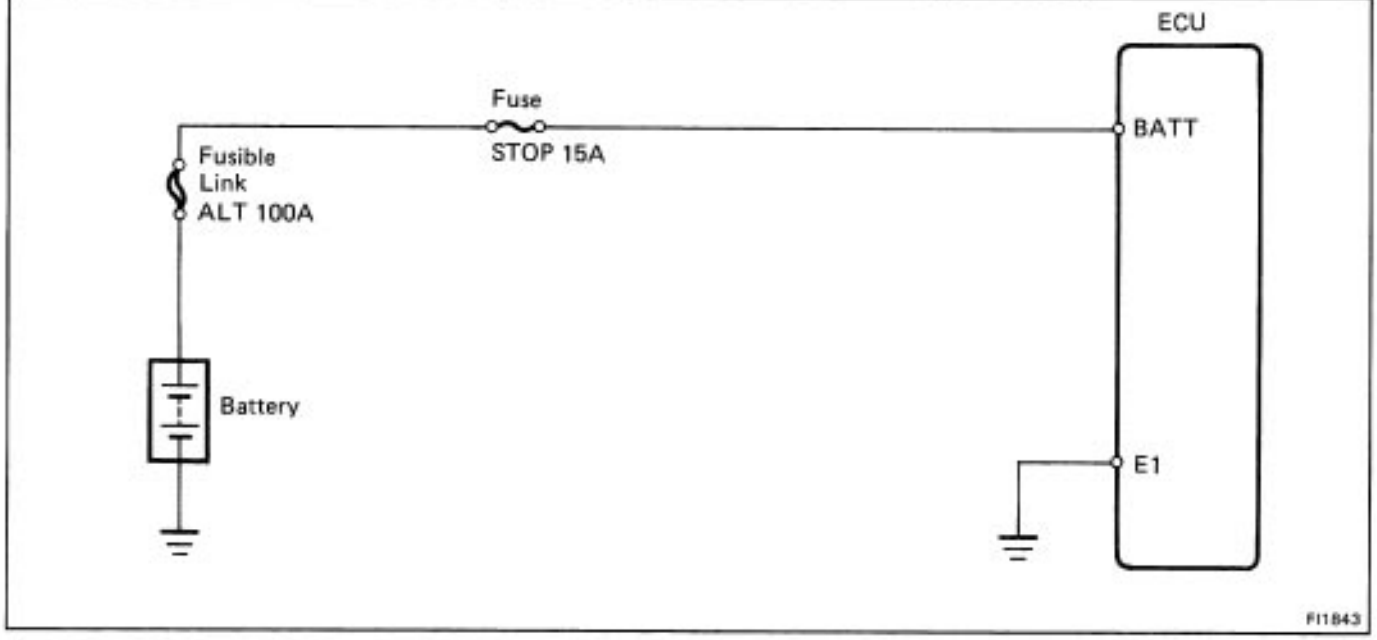

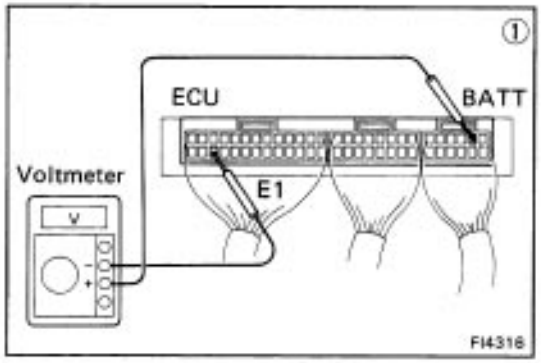

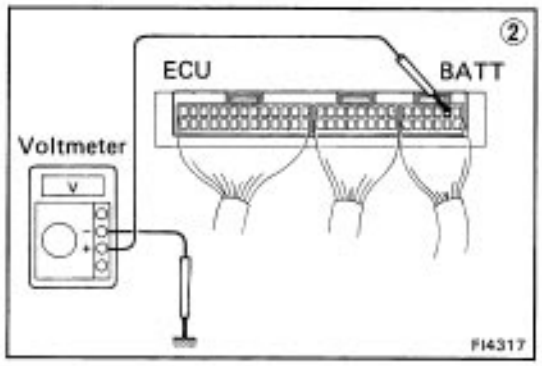

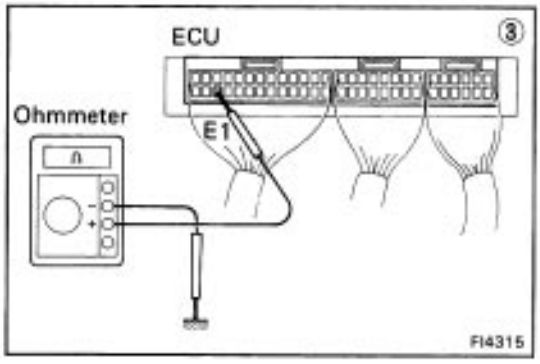

① There is no voltage between ECU terminals BATT and E1 .

② Check that there is voltage between ECU terminal BATT and body ground.

NO

OK

③ Check wiring between ECU terminal E 1 and body ground

OK

BAD

Try another ECU.

Repair or replace.

Check fuse and fusible link.

BAD

Replace.

OK

Check wiring between ECU terminal and battery.

BAD

Repair or replace.

No.	Terminal	Trouble	Condition		STD voltage
3	IDL – E2	No voltage	Ignition switch ON	Throttle valve open	10 – 14 V
	VTA – E2			Throttle valve fully closed	0.1 – 1.0 V
				Throttle valve fully open	4 – 5 V
	VCC – E2			–	4 – 6 V

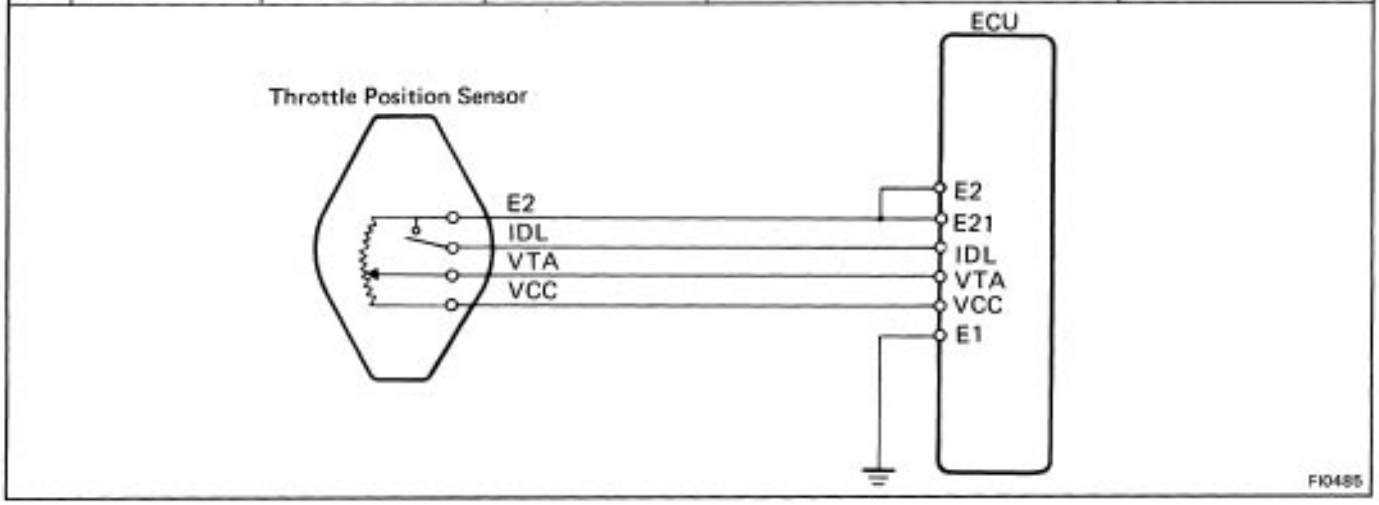

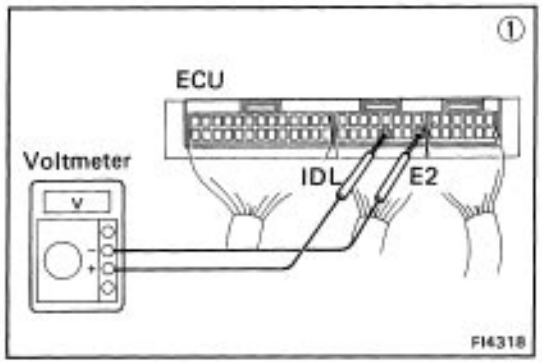

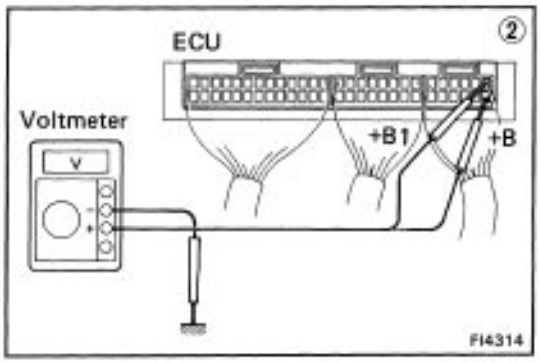

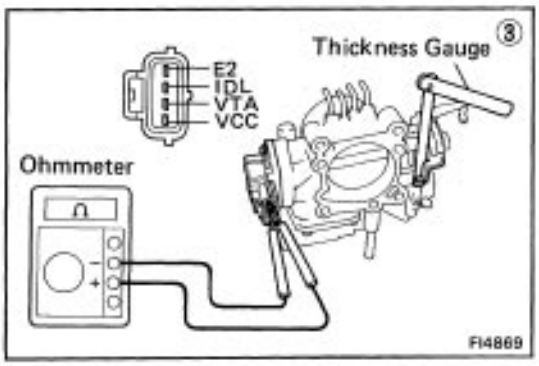

- **IDL – E2**

① There is no voltage between ECU terminals IDL and E2. **(IG SW ON) (Throttle valve open)**

② Check that there is voltage between ECU terminal + B (+B1) and body ground. **(IG SW ON)**

NO → Check wiring between ECU terminal E 1 and body ground.
- OK → Try another ECU.
- BAD → Repair or replace.

OK → Refer to +B – E1 trouble section. (No. 1). (See page FI–111)
- BAD → Repair or replace.

OK → ③ Check throttle position sensor. (See page FI–146)
- BAD → Repair or replace throttle position sensor.
- OK → Check wiring between ECU and throttle position sensor.
  - BAD → Repair or replace.
  - OK → Try another ECU.

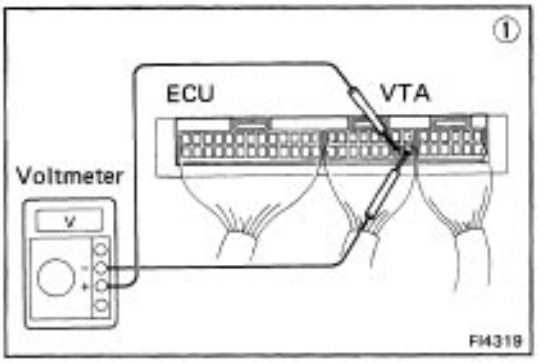

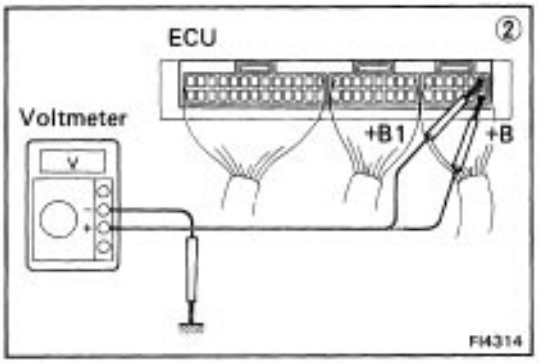

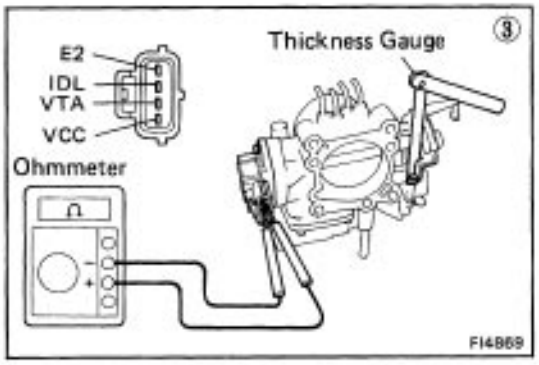

- **VTA – E2**

① There is no specified voltage at ECU terminals VTA and E2. **(IG SW ON)**

② Check that there is voltage between ECU terminal +B1 (+B) and body ground**. (IG SW ON)**

NO

OK

Check wiring between ECU terminal E1 and body ground.

BAD

Repair or replace

Refer to +B – E1 trouble section (No. 1). (See page FI–111)

BAD

Repair or replace

OK

3 Check throttle position sensor.

BAD

Repair or replace

OK

Check wiring between ECU and throttle position sensor.

BAD

Repair or replace

OK

Try another ECU.

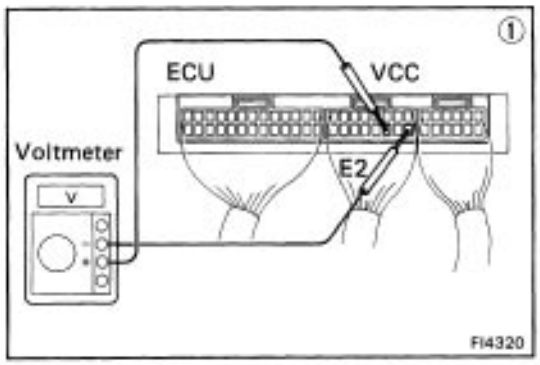

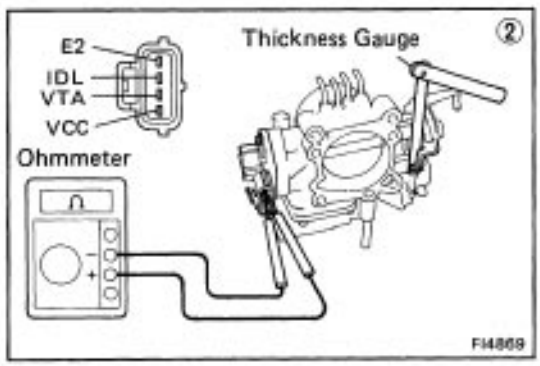

- **VCC – E2**

① There is no voltage between ECU terminals VCC and E2. **(IG SW ON)**

Check that there is voltage between ECU terminal +131 (+B) and body ground. **(IG SW ON)**

OK

NO

② Check throttle position sensor.

Refer to + B – E1 trouble section (No. 1). (See page FI–111)

BAD

OK

Repair or replace

Check wiring between ECU and throttle position sensor.

OK

BAD

Try another ECU.

Repair or replace wiring.

No.	Terminal	Trouble	Condition		STD Voltage
4	+B1 – E2	No voltage	Ignition switch ON	–	10 – 14 V
	VC – E2			–	6 – 10 V
	VS – E2			Measuring plate fully closed	2 – 5.5 V
				Measuring plate fully open	6 – 9 V
			Idling	–	2 – 8 V

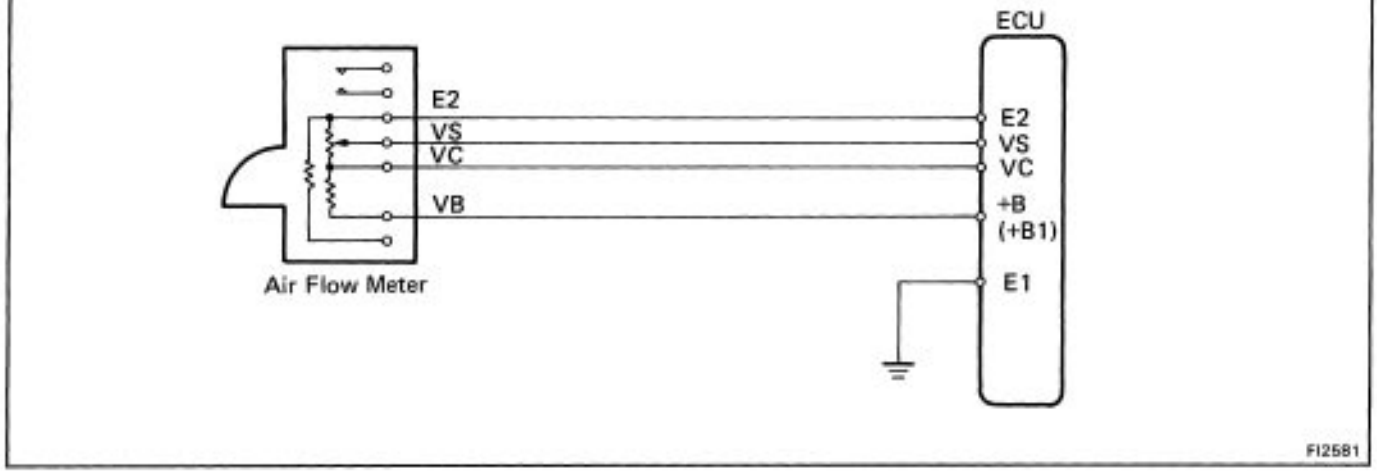

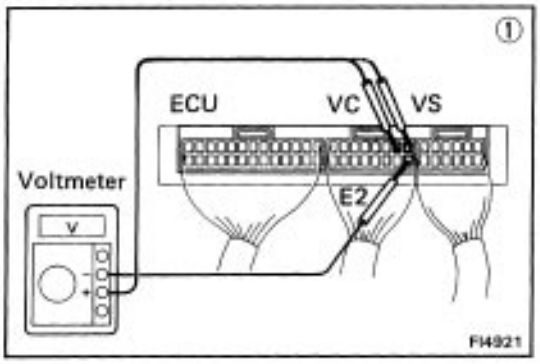

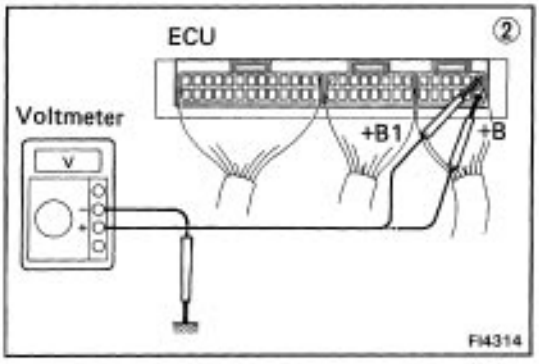

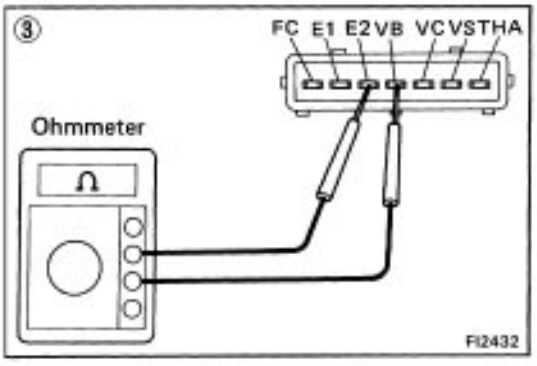

① **There is no specified voltage at ECU terminals VC or VS and E2. (IG SW ON)**

② Check that there is voltage between ECU terminal + B (+ B1) and body ground. **(IG SW ON)**

OK → Check wiring between ECU terminal E1 and body ground.

NO → Refer to + B – E 1 trouble section (No.1) (See page FI–111)

Check wiring between ECU terminal E1 and body ground.

OK → ③ Check air flow meter. (See page FI–144)

BAD → Repair or replace.

③ Check air flow meter. (See page FI–144)

BAD → Replace air flow meter.

OK → Check wiring between ECU and air flow meter.

Check wiring between ECU and air flow meter.

OK → Try another ECU.

BAD → Repair or replace.

No.	Terminal	Trouble	Condition	STD voltage
5	No.10 – E01 No.20 – E02	No voltage	Ignition switch ON	10 – 14 V

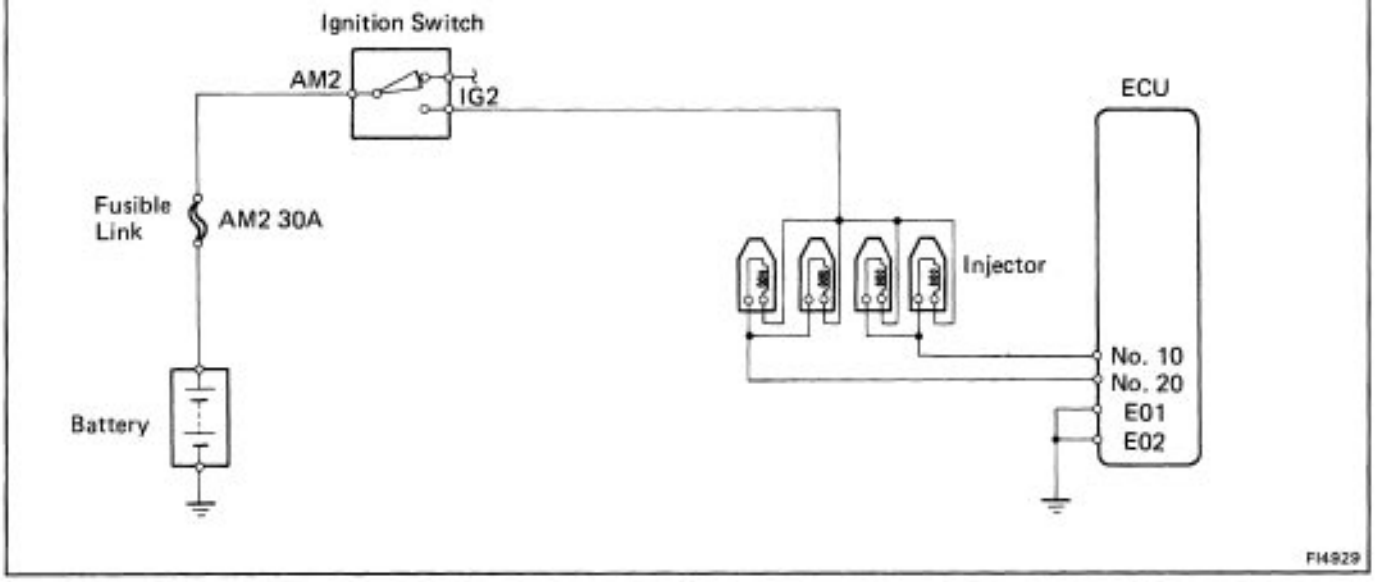

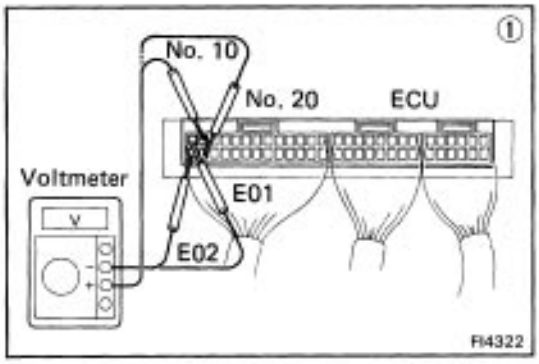

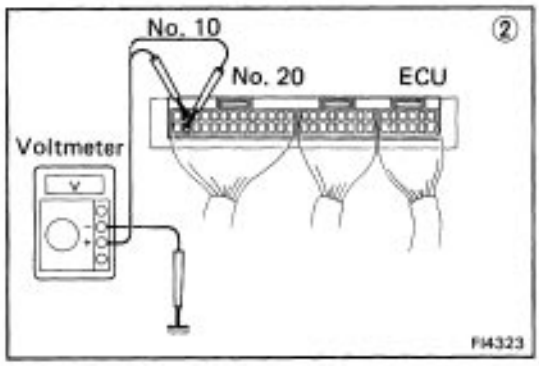

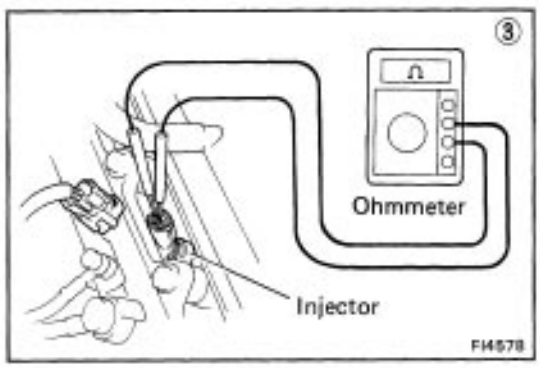

① There is no voltage between ECU terminals No. 10 and/or No.20 and E01 and/or E02. **(IG SW ON)**

↓

② Check that there is voltage between ECU terminal No. 10 and/or No.20 and body ground.

NO → OK

Check wiring between ECU terminal E01 and/ or E02 and body ground.

OK → Try another ECU.

BAD → Repair or replace.

NO → Check fuse, fusible link, ignition switch.

BAD → Repair or replace.

OK

↓

③ Check resistance of magnetic coil in each injector.
STD resistance: Approx. 13.8Ω

OK

↓

Check wiring between ECU terminal No.10 and/or No.20 and battery.

BAD → Repair or replace.

BAD → Replace injector.

No.	Terminal	Trouble	Condition	STD voltage
6	W – E1	No voltage	No trouble ("CHECK ENGINE" warning light off) and engine running.	10 – 14 V

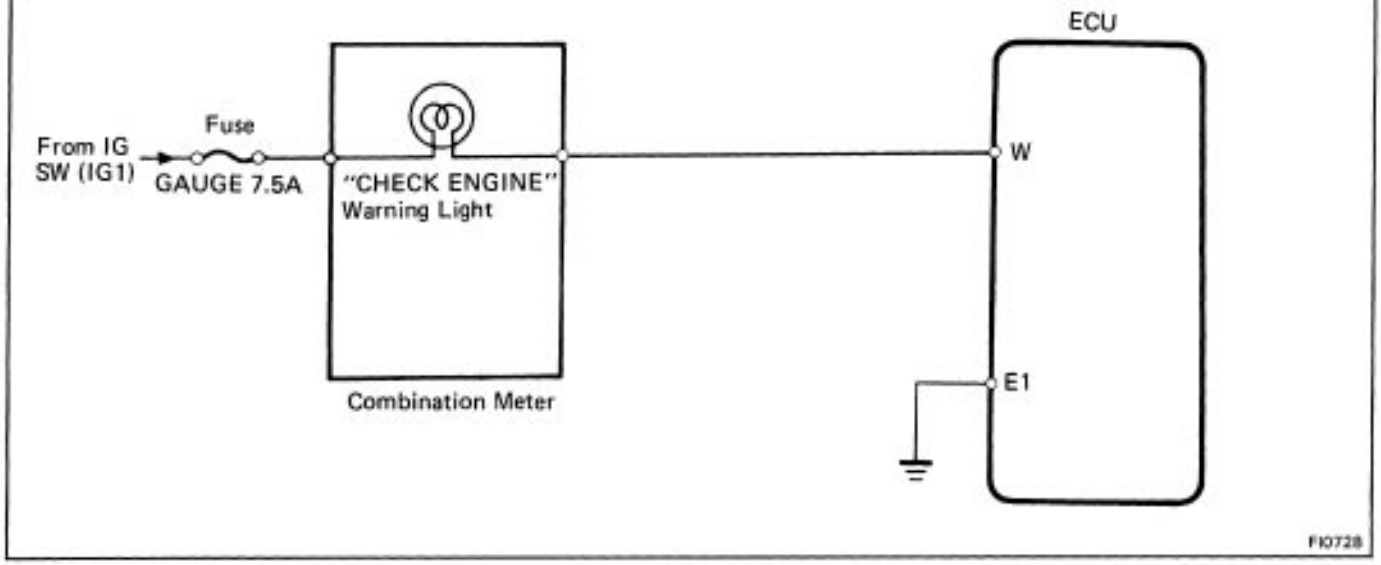

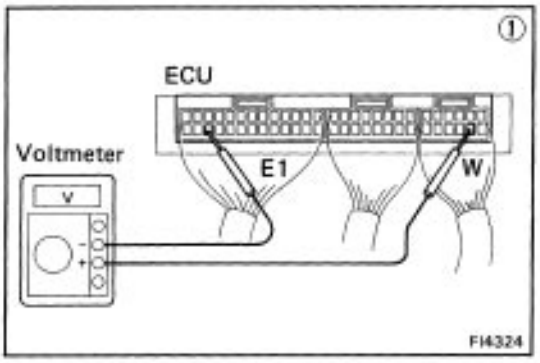

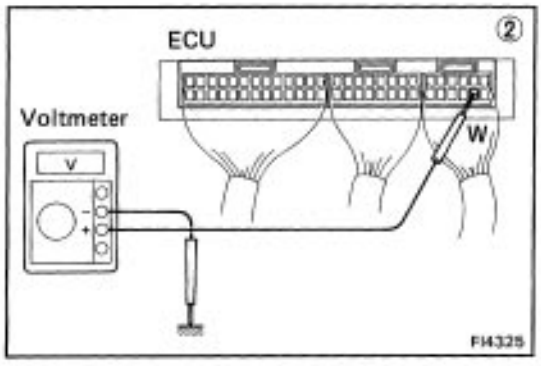

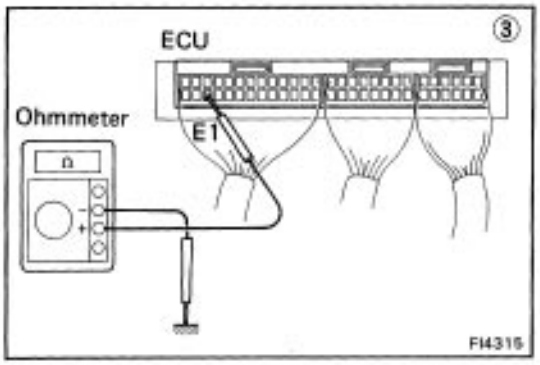

① There is no voltage between ECU terminals W and E1. **(Idling)**

② Check that there is voltage between ECU terminal W and body ground.

NO

OK

③ Check wiring between ECU terminal E1 and body ground.

OK

Try another ECU.

BAD

Repair or replace.

Check GAUGE fuse and check engine warning light.

OK

BAD

Repair or replace.

Fuse blows again

Check wiring between ECU terminal W and fuse.

BAD

Repair or replace.

No.	Terminal	Trouble	Condition		STD Voltage
7	THA – E2	No voltage	Ignition switch ON	Intake air temperature 20°C (68°F)	1 – 3 V

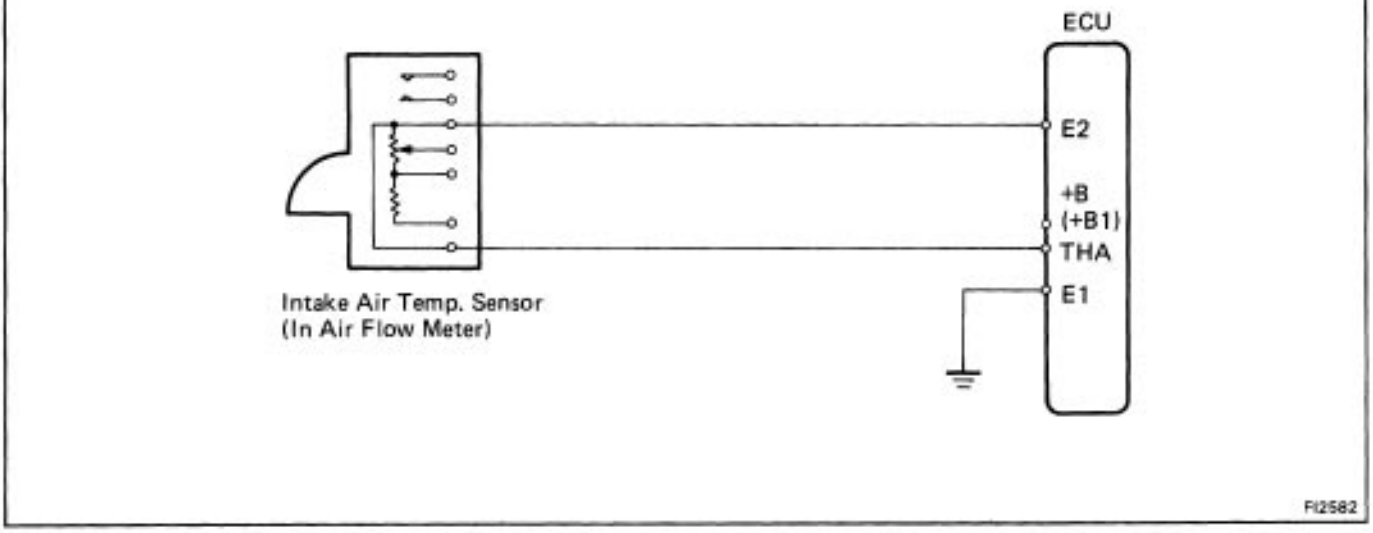

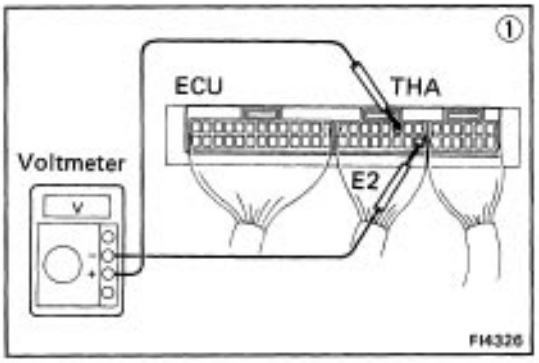

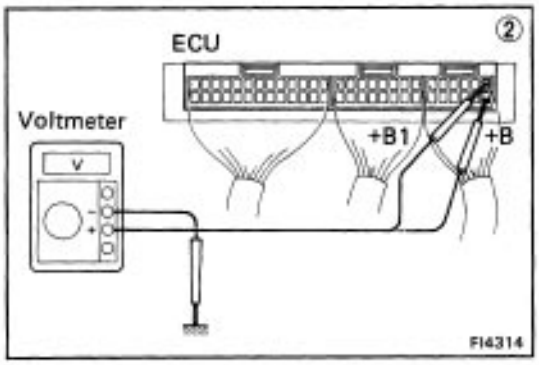

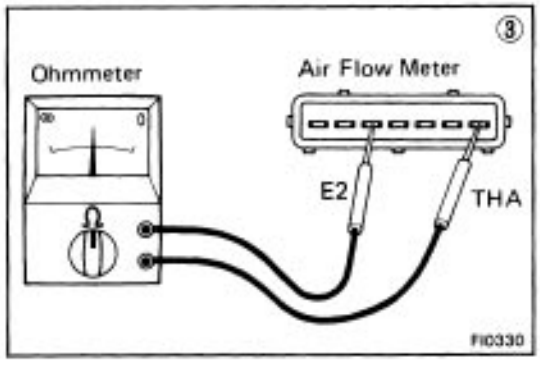

① There is no specified voltage between ECU terminals THA and E2. **(IG SW ON)**

↓

② Check that there is voltage between ECU terminal +B (+B1) and body ground. **(IG SW ON)**

OK → ↓

NO → Refer to +B – E1 trouble section (No. 1). (See page FI–111)

↓

Check wiring between ECU terminal E1 and body ground.

OK → ↓

BAD → Repair or replace.

↓

③ Check air flow meter. (See page FI–144)

BAD → Replace air flow meter.

OK → ↓

Check wiring between ECU and air temp. sensor.

OK → ↓

BAD → Repair or replace.

Try another ECU.

No.	Terminal	Trouble	Condition		STD Voltage
8	THW – E2	No voltage	Ignition switch ON	Coolant temperature 80°C (176°F)	0.1 – 1.0 V

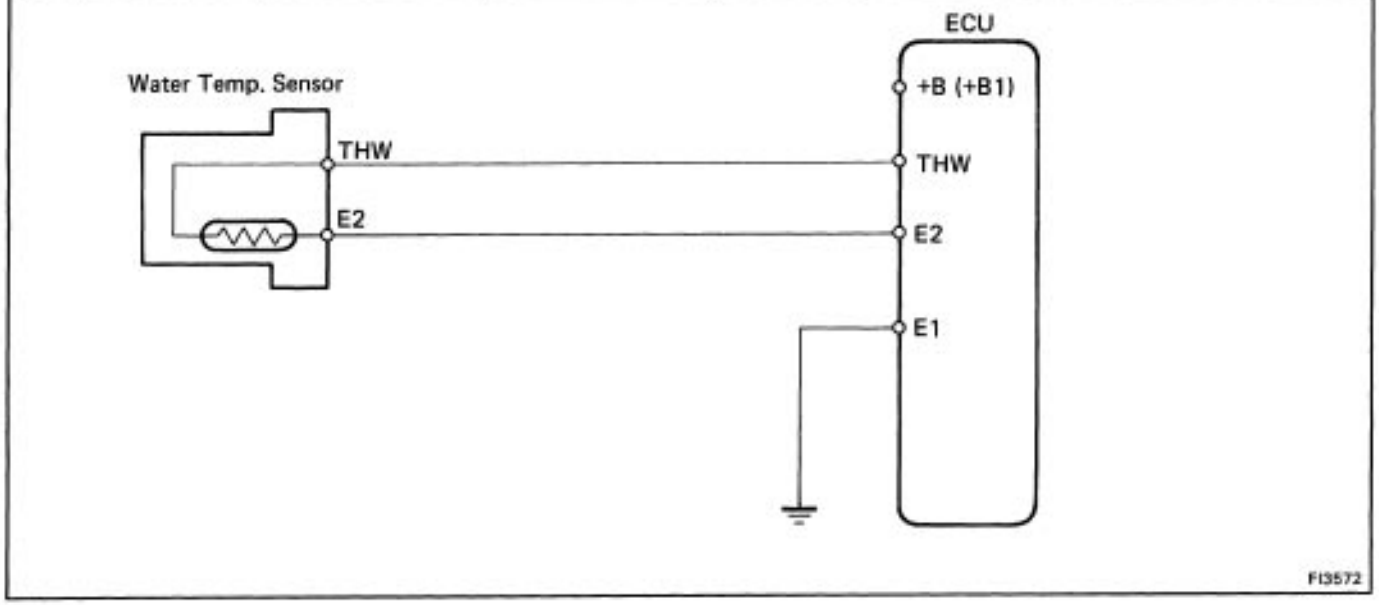

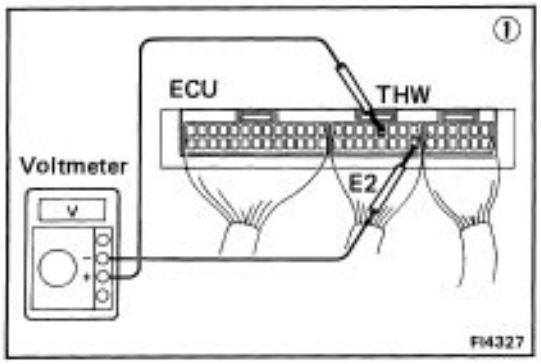

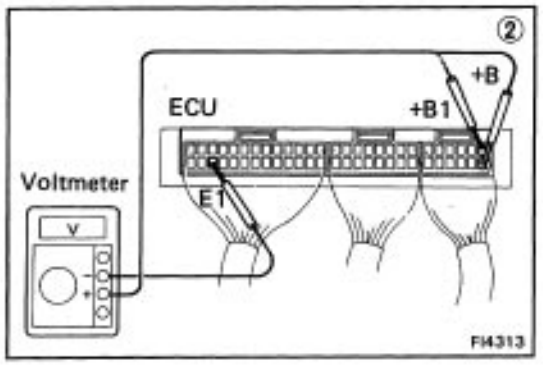

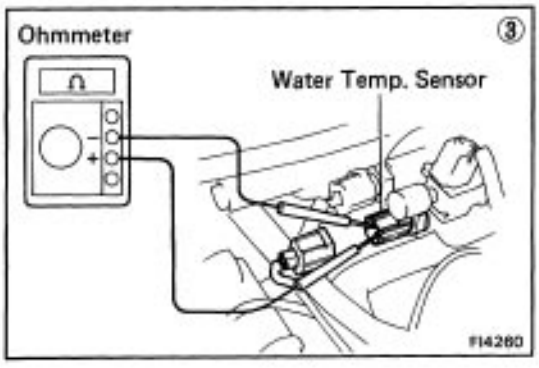

① There is no voltage between ECU terminals THW and E2. **(IG SW ON)**

② Check that there is voltage between ECU terminal +B (+B1) and body ground. **(IG SW ON)**

OK → Check wiring between ECU terminal E 1 and body ground.

NO → Refer to +B – E1 trouble section (No. 1). (See page FI–111)

Check wiring between ECU terminal E 1 and body ground.

OK → ③ Check water temp. sensor. (See page FI–155)

BAD → Repair or replace.

③ Check water temp. sensor. (See page FI–155)

BAD → Replace water temp. sensor.

OK → Check wiring between ECU and water temp. sensor.

Check wiring between ECU and water temp. sensor.

OK → Try another ECU.

BAD → Repair or replace.

No.	Terminal	Trouble	Condition	STD voltage
9	STA – E1	No voltage	Cranking	6 – 14 V

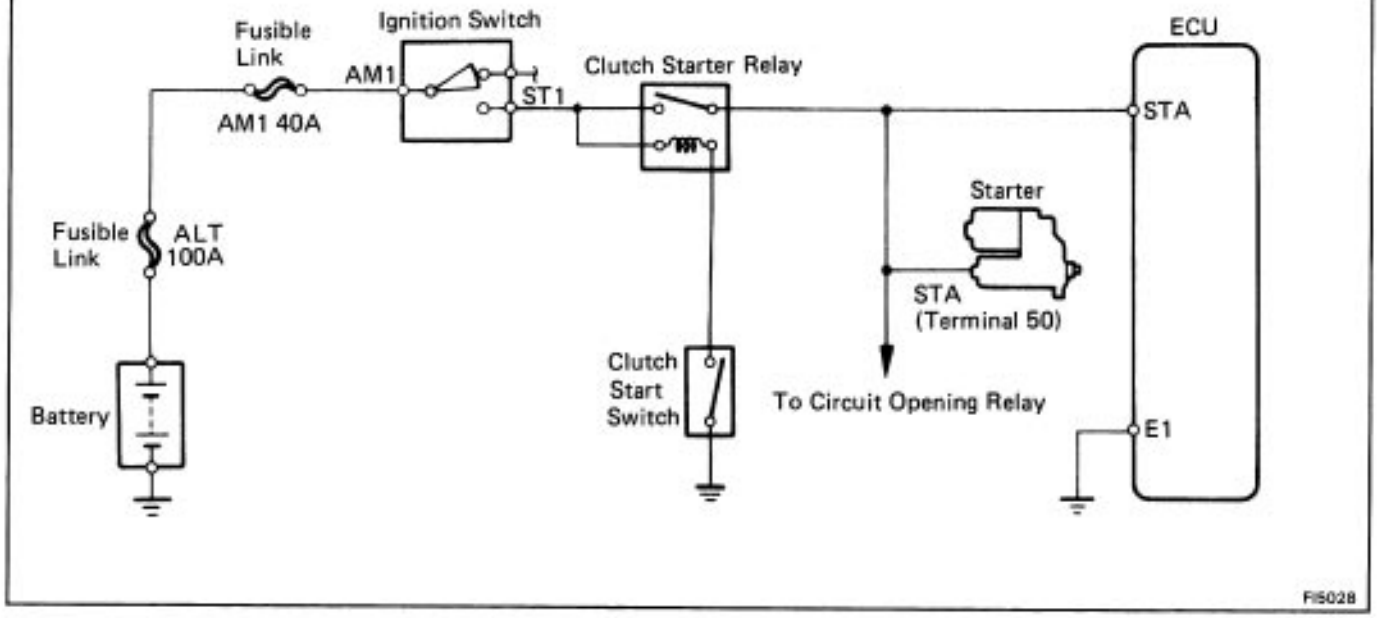

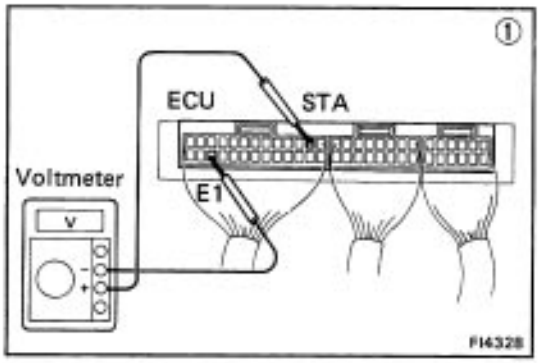

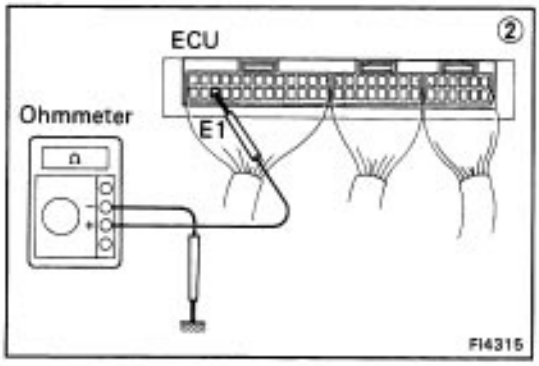

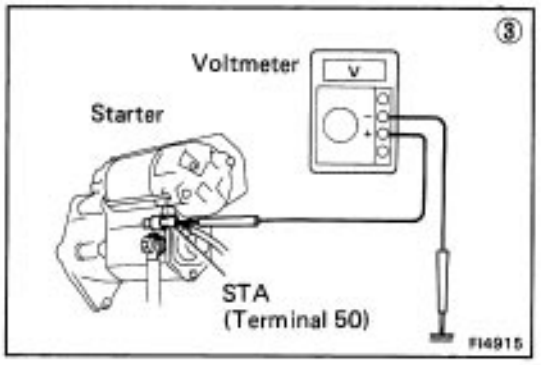

① There is no voltage between ECU terminals STA and El. **(IG SW START)**

Check starter operation.
- OK → Check wiring between ECU terminal STA and ignition switch terminal ST1.
  - OK → ② Check wiring between ECU terminal E1 and body ground.
    - OK → Try another ECU.
    - BAD → Repair or replace.
  - BAD → Repair or replace.
- BAD → Check fusible link, battery, wiring and ignition switch.
  - BAD → Repair or replace.
  - OK → ③ Check that there is voltage at STA (50) terminal of starter. **(IG SW START) STD voltage: 6 – 14 V**
    - OK → Check starter.
    - NO → Check wiring between ignition switch terminal ST1 and starter terminal STA (50).

No.	Terminals	Trouble	Condition	STD voltage
10	IGT – E1	No voltage	Idling	0.7 – 1.0 V

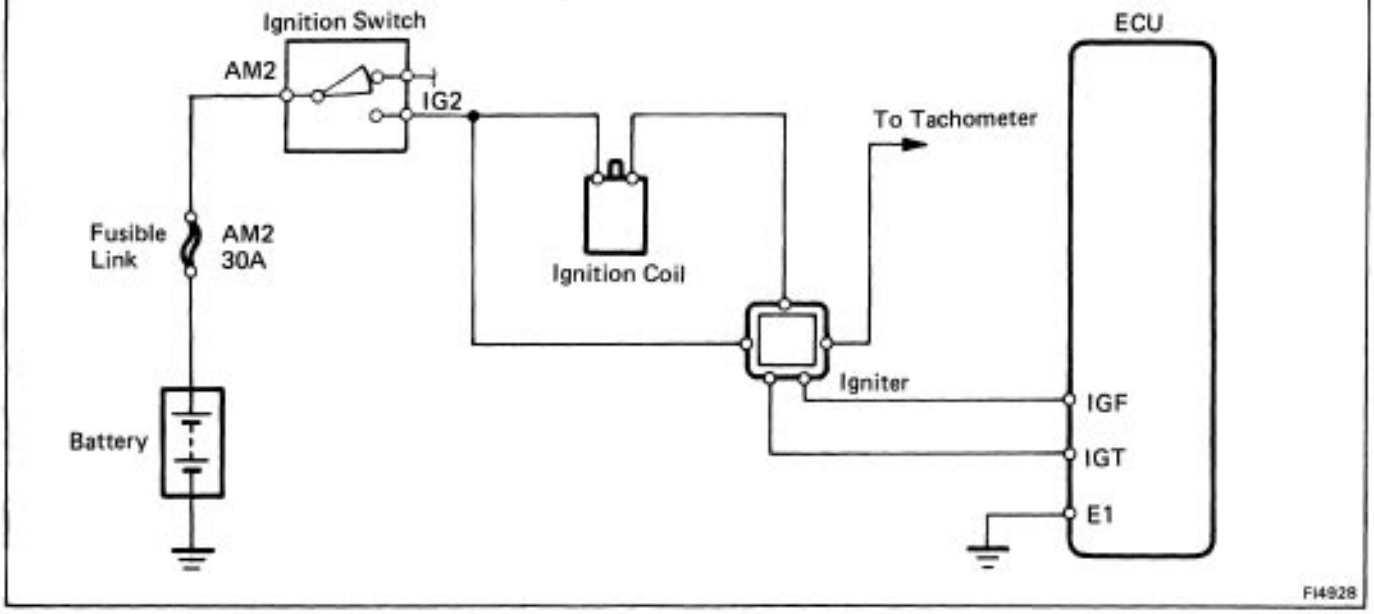

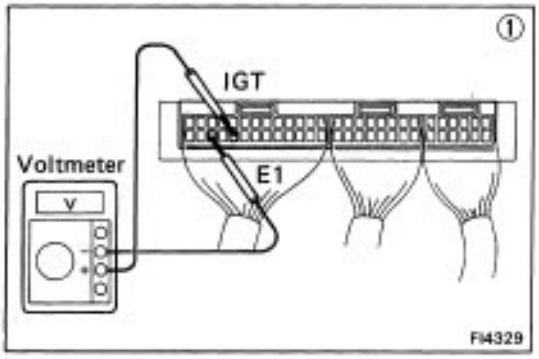

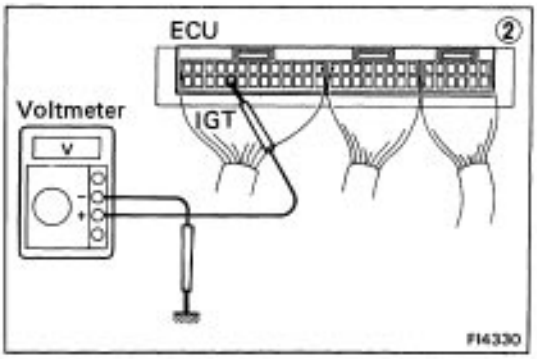

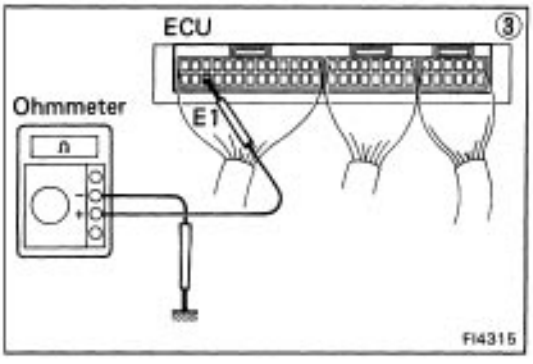

① There is no voltage between ECU terminal IGT and E1. **(Idling)**

② Check that there is voltage between ECU terminal IGT and body ground. **(Idling)**

OK → ③ Check wiring between ECU terminal E1 and body ground.

③ BAD → Repair or replace

② OK → Refer +B – E1 trouble section (No. 1). (See page FI–111)

Refer +B – E1 trouble section (No. 1). (See page FI–111) BAD → Repair or replace

OK → Check wiring between ECU and distributor. BAD → Repair or replace

OK → Check distributor. BAD → Replace

OK → Check wiring between ECU and igniter. BAD → Repair or replace

OK → Check igniter. (See page IG–8) BAD → Repair or replace

OK → Try another ECU.

No.	Terminals	Trouble	Condition	STD Voltage
11	A/C – E1	No voltage	Air conditioning ON	5 – 14 V

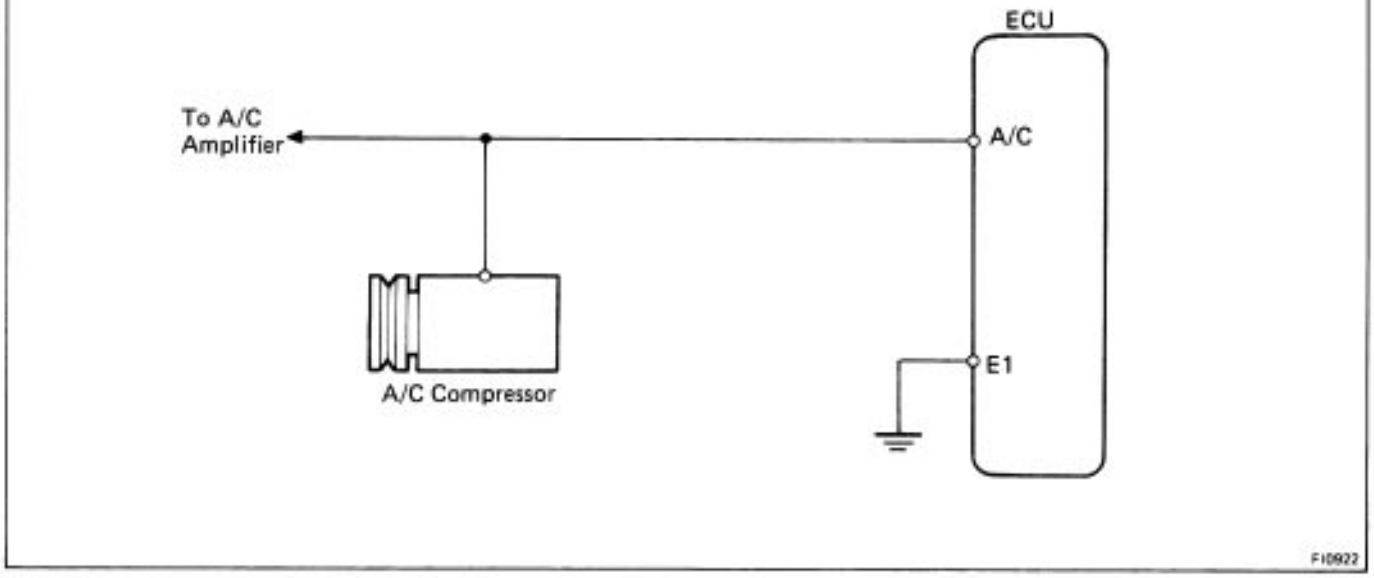

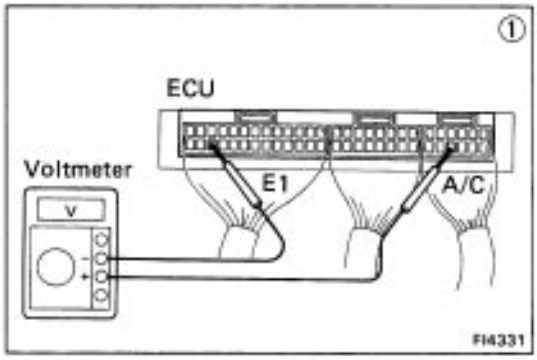

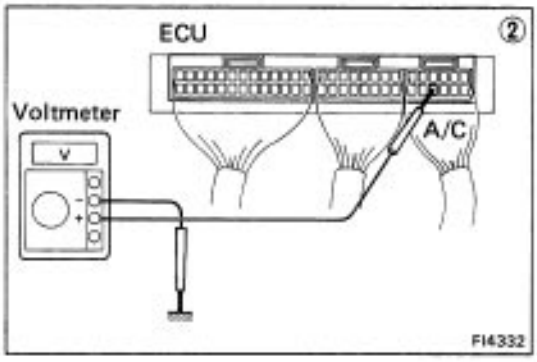

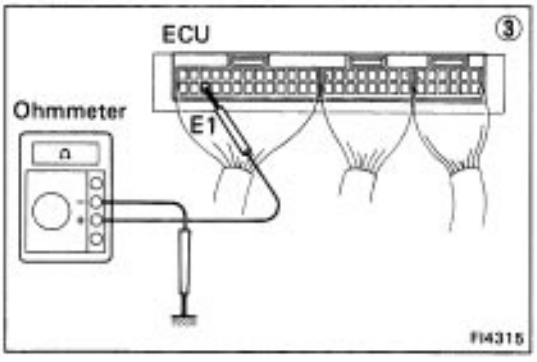

① There is no voltage between ECU terminals A/C and El. **(Air conditioning ON)**

② Check that there is voltage between ECU terminal A/C and body ground.

NO → OK

③ Check wiring between ECU E1 and body ground.

OK → Try another ECU

BAD → Repair or replace

Check compressor running

OK → Check wiring between ECU terminal A/C and amplifier.

BAD → Repair or replace

BAD

Check that there is voltage between amplifier terminal and body ground.

BAD → Repair or replace

OK

Check wiring between amplifier and ECU or compressor.

BAD → Repair or Replace

Federal and Canada

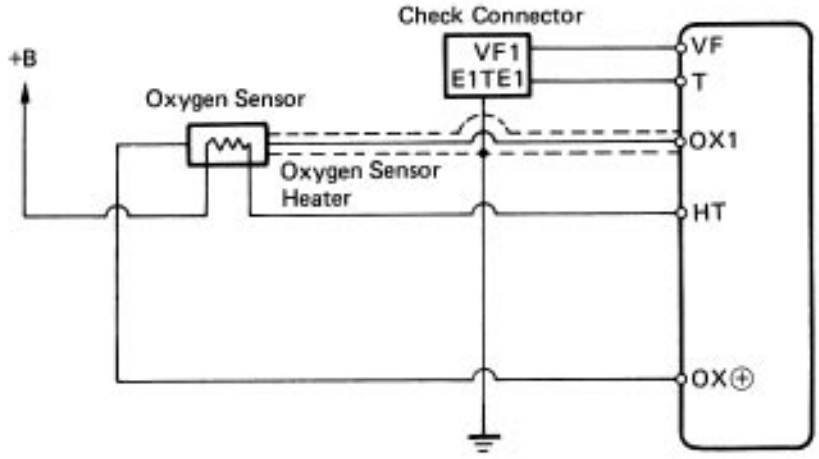

California

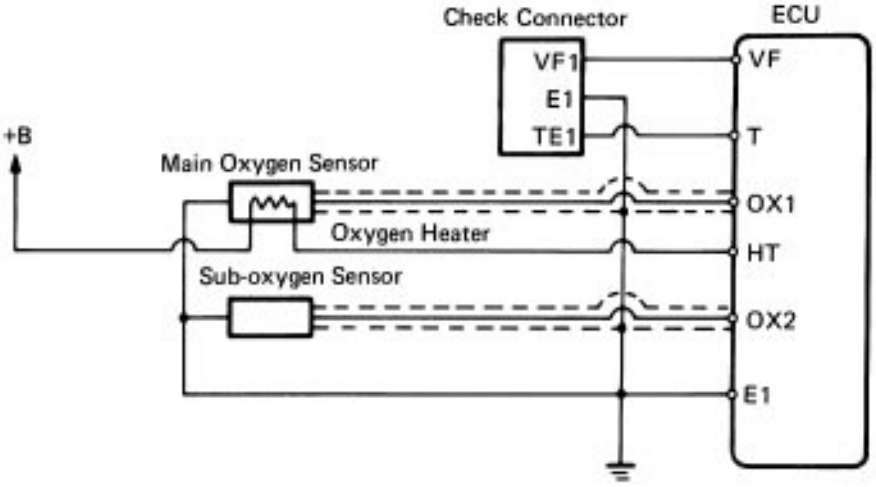

FI2678
FI3589

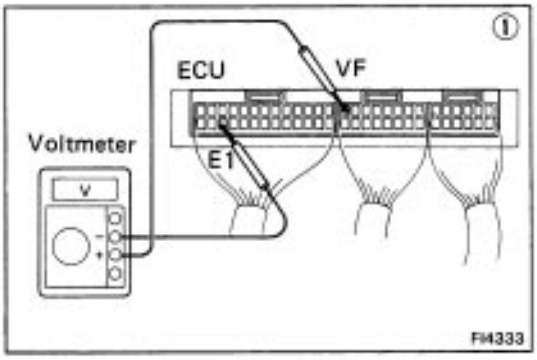

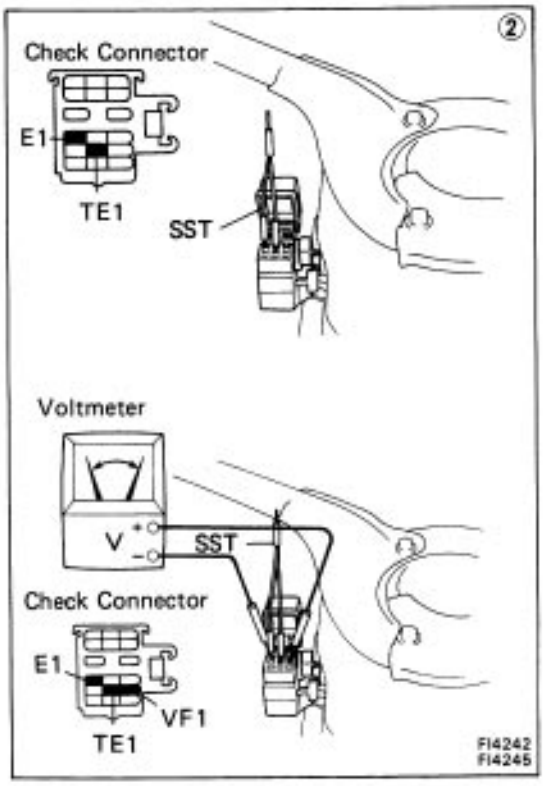

① There is no voltage between ECU terminals VF and El.

Check that there is voltage between ECU terminal VF and body ground.

NO → Check wiring between ECU terminal E1 and body ground.
- OK → Try another ECU.
- BAD → Repair or replace.

OK →

Is air leaking into air intake system? BAD → Repair air leak.

OK →

Check spark plugs. BAD → Repair or replace.

OK →

Check distributor and ignition system. BAD → Repair or replace.

OK →

Check fuel pressure. BAD → Repair or replace.

OK →

Check injector. BAD → Repair or replace.

OK →

Check cold start injector. * BAD → Repair or replace.

OK →

Check air flow meter. BAD → Repair or replace.

OK →

② Check operation of oxygen sensor. OK → System normal.

BAD →

Check wiring between oxygen sensor and ECU connector. BAD → Repair wiring.

OK →

Replace oxygen sensor.

* Rich malfunction only

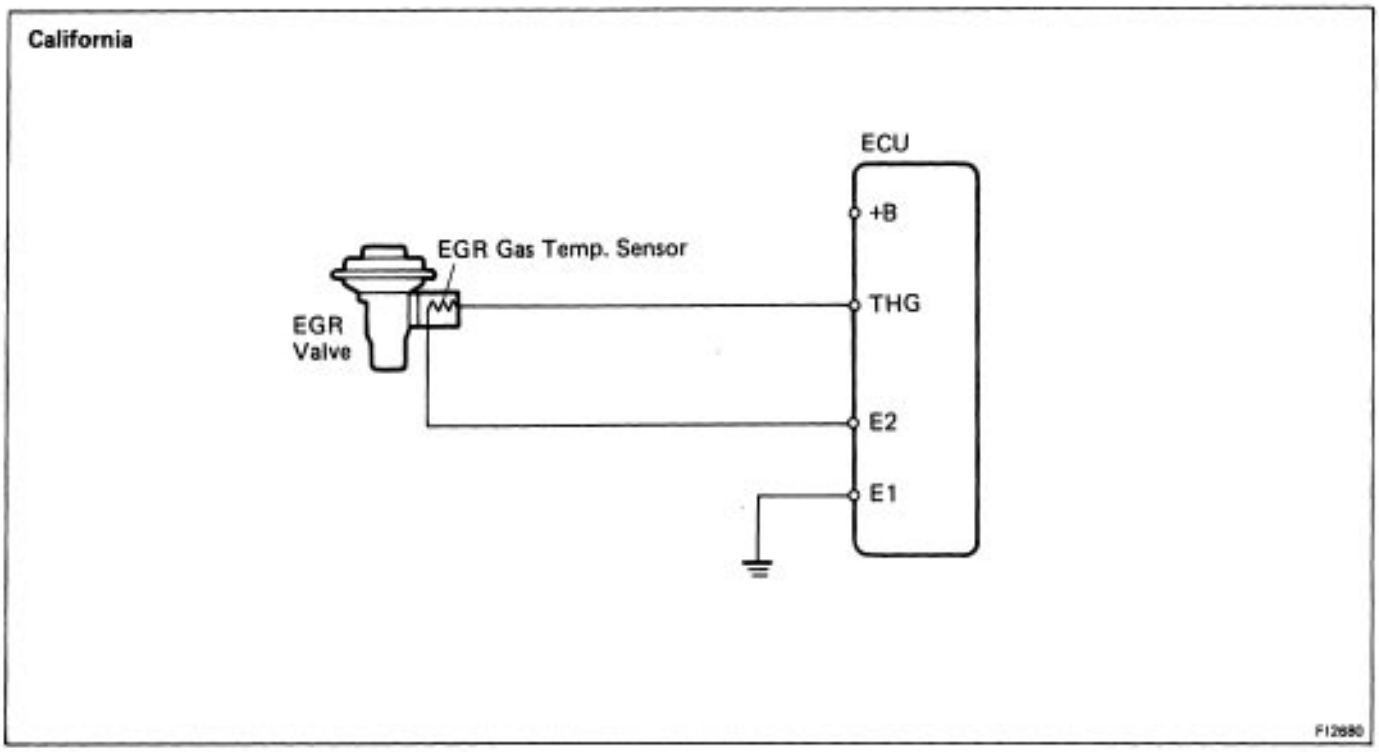

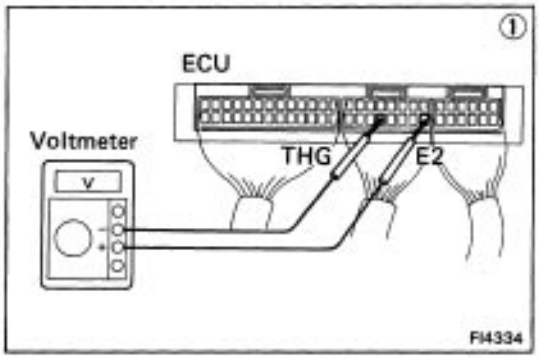

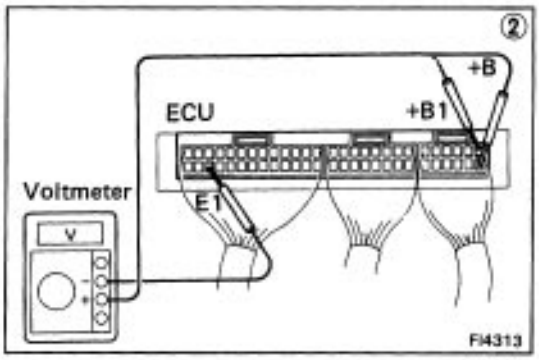

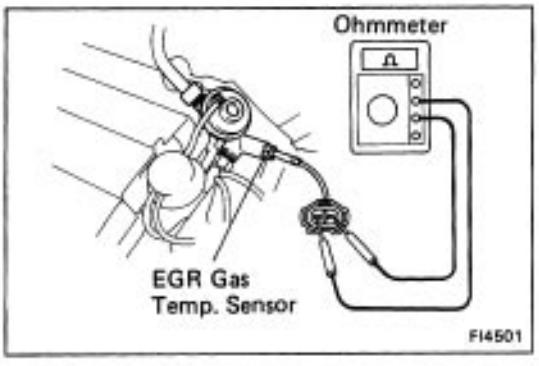

① There is no voltage between ECU terminals THG and E2. **(IG SW ON)**

↓

② Check that there is voltage between ECU terminal +B (+B1) and body ground. **(IG SW ON)**

OK → ↓

NO → Refer to +B–E1 trouble section (No. 1). (Seepage FI–111)

↓

Check wiring between ECU terminal E1 and body ground.

OK → ↓

BAD → Repair or replace.

↓

Check EGR system.

OK → ↓

BAD → Repair or replace.

↓

③ Check EGR gas temp. sensor.

BAD → Replace EGR gas temp. sensor.

OK → Check wiring between ECU and EGR gas temp. sensor.

OK → Try another ECU.

BAD → Repair or replace.

FUEL SYSTEM

Fuel Pump

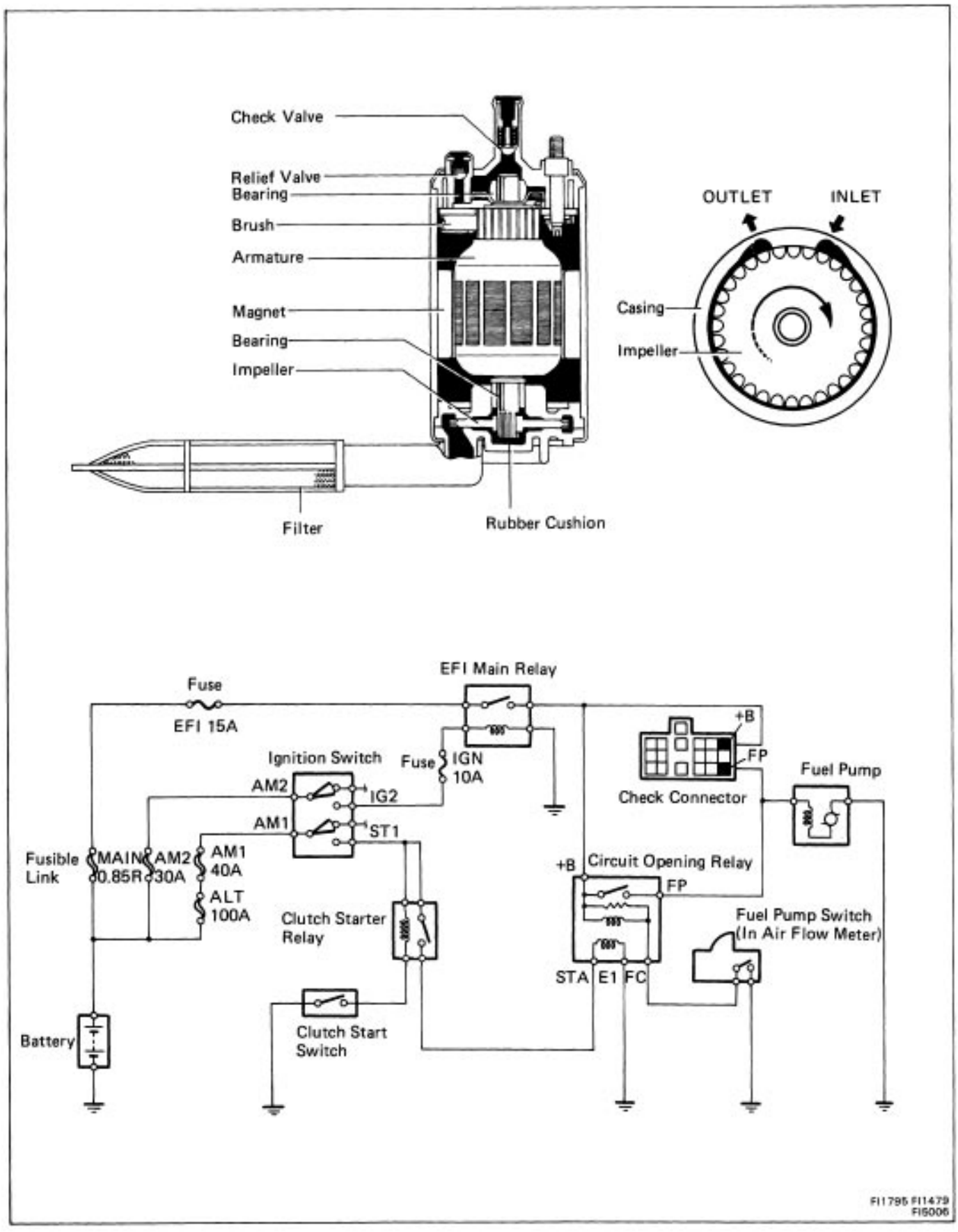

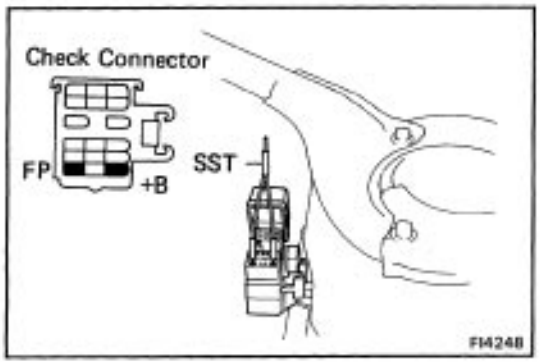

ON–VEHICLE INSPECTION

1. CHECK FUEL PUMP OPERATION

(a) Turn the ignition switch to ON.

NOTICE: Do not start the engine.

(b) Using SST, connect +B and FP terminals of the fuel pump check connector.
SST 09843–18020

HINT: The check connector is located near the air flow meter.

(c) Check that there is pressure in the hose from the fuel filter.

HINT: At this time, you will hear fuel pressure noise.

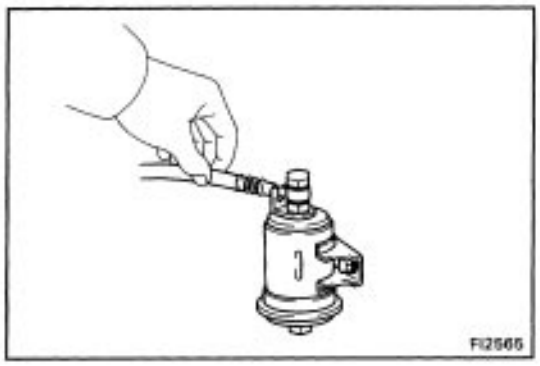

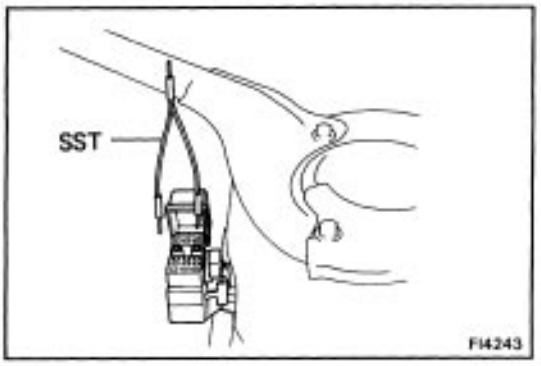

(d) Remove SST from the check connector.

(e) Turn the ignition switch to OFF.

If there is no pressure, check the following parts.

- Fusible link (0.85R, AM2 30 Ay
- Fuse (EFI 15 A, IGN 10 A)
- EFI main relay
- Circuit opening relay
- Fuel pump
- Wiring connections

2. CHECK FUEL PRESSURE .

(a) Check that battery voltage is above 12 V.

(b) Disconnect the battery ground cable.

(c) Disconnect the wiring connector from the cold start injector.

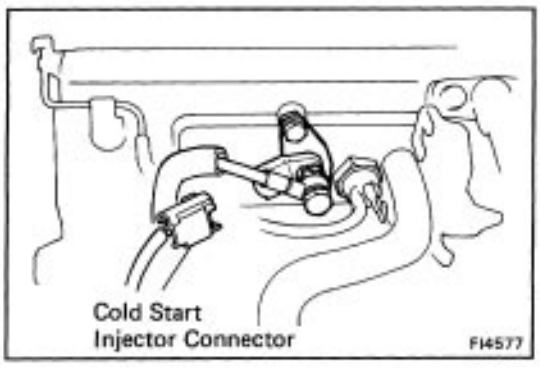

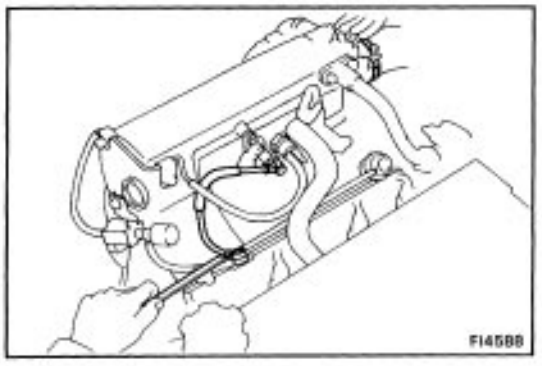

(d) Place a suitable container of shop towel under the cold start injector pipe.

(e) Slowly loosen the union bolt of the cold start injector pipe and remove the bolt and two gaskets from the delivery pipe.

(f) Drain the fuel in the delivery pipe.

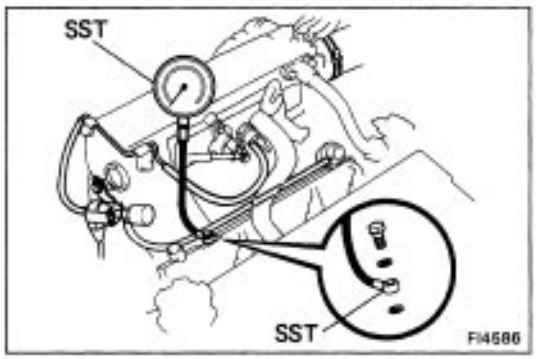

(g) Install a gasket, SST, another gasket and union bolt to the delivery pipe as shown in the figure.
SST 09268–45012
(h) Wipe off any splattered gasoline.
(i) Reconnect the battery cable.

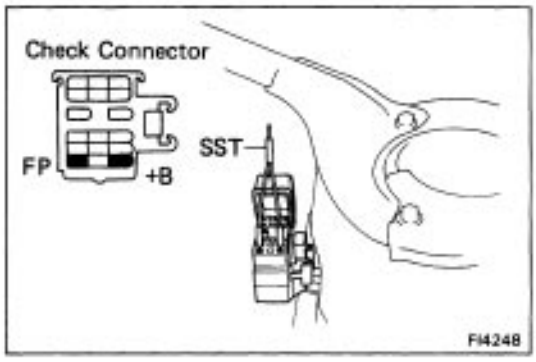

(j) Using SST, connect terminals FP and + B of the check connector.
SST 09843–18020
HINT: The check connector is located near the air flow meter.

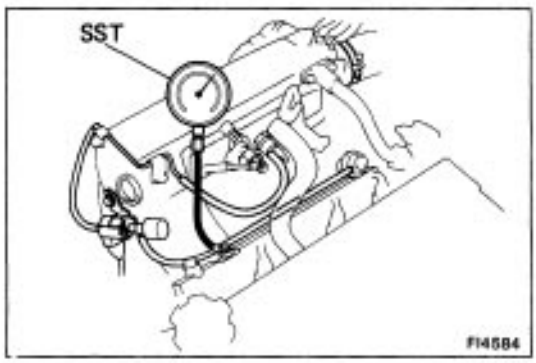

(k) Turn the ignition switch to ON.
(l) Measure the fuel pressure.
Fuel pressure: 2.7 – 3.1 kg/cm2
(38 – 44 psi, 265 – 304 kPa)
If pressure is high, replace the fuel pressure regulator.
If pressure is low, check the following parts.
- Fuel hoses and connection
- Fuel pump
- Fuel filter
- Pressure regulator

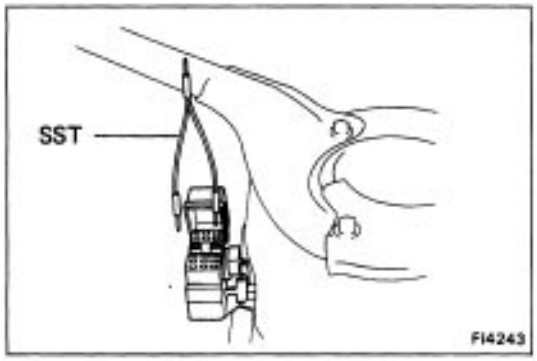

(m) Remove SST from the check connector.
SST 09843–18020
(n) Start the engine.

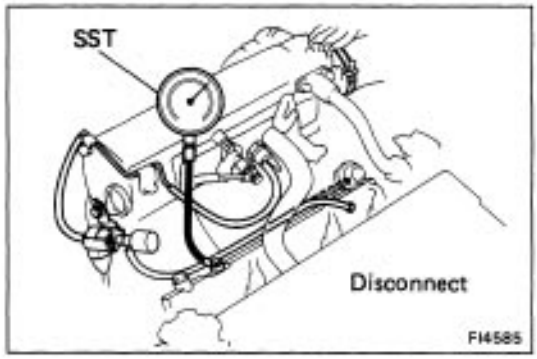

(o) Disconnect the vacuum sensing hose from the pressure regulator and pinch it closed.
(p) Measure the fuel pressure at idling.
Fuel pressure: 2.7 – 3.1 kg/cm2
(38 – 44 psi, 265 – 304 kPa)

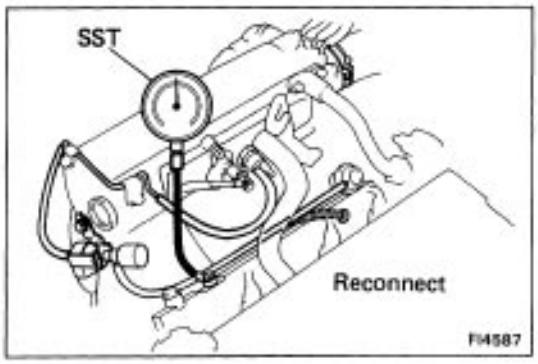

(q) Reconnect the vacuum sensing hose to the pressure regulator.

(r) Measure the fuel pressure at idling after 90.seconds.

Fuel pressure: 2.1 – 2.6 kg/cm2
(30 – 37 psi, 206 – 265 kPa)

If no pressure, check the vacuum sensing hose and pressure regulator.

(s) Stop the engine. Check that the fuel pressure remains above 1.5 kg/cm2 (21 psi, 147 kPa) for 5 minutes after the engine is turned off.

If not within specification, check the fuel pump, pressure regulator and/or injectors.

(t) After checking fuel pressure, disconnect the battery ground cable and carefully remove the SST to prevent gasoline from splashing.

(u) Using new gaskets, reconnect the cold start injector hose to the delivery pipe.

(v) Connect the wiring connector to the cold start injector.

(w) Check for fuel leakage.

REMOVAL OF FUEL PUMP

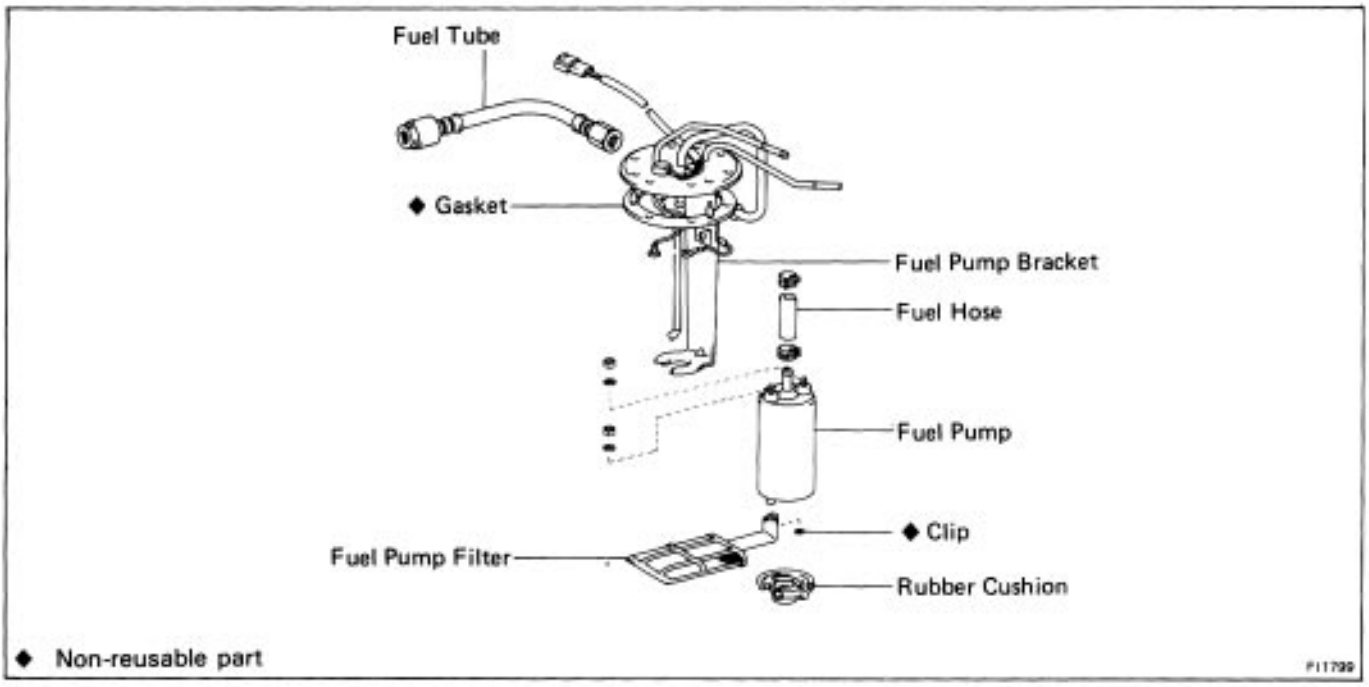

CAUTION: Do not smoke or work near an open flame when working the fuel pump.

1. DRAIN GASOLINE FROM FUEL TANK

2. REMOVE FUEL TANK

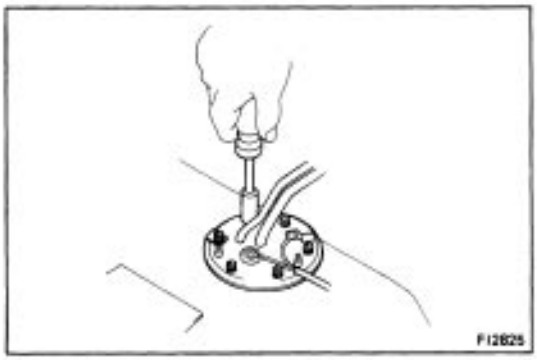

3. REMOVE FUEL PUMP BRACKET FROM FUEL TANK

(a) Remove the six bolts.

(b) Pull out the fuel pump bracket.

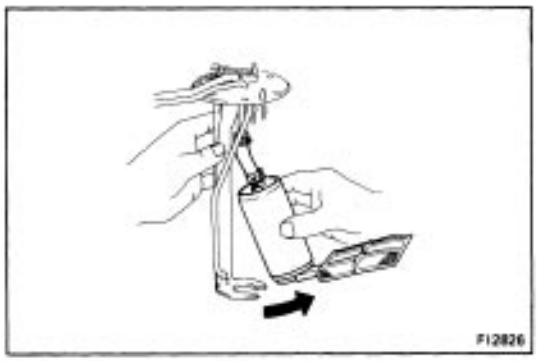

4. REMOVE FUEL PUMP FROM FUEL PUMP BRACKET

(a) Remove the two nuts and disconnect the wires from the fuel pump.

(b) Pull off the lower side of the fuel pump from the bracket.

(c) Remove the fuel pump from the fuel hose.

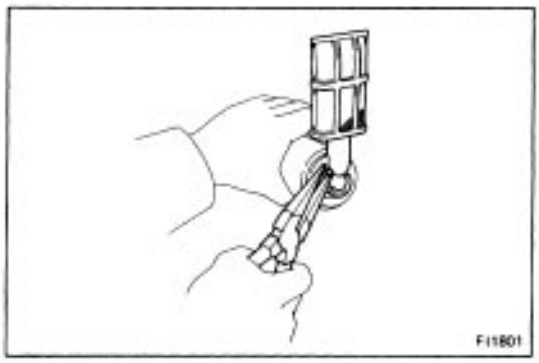

5. REMOVE FUEL PUMP FILTER FROM FUEL PUMP

(a) Remove the rubber cushion.

(b) Remove the clip and pull out the filter.

INSTALLATION OF FUEL PUMP

(See page FI–130)

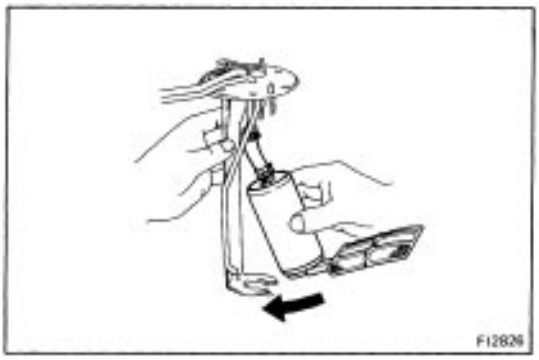

1. INSTALL FUEL PUMP FILTER TO FUEL PUMP

2. INSTALL FUEL PUMP TO FUEL PUMP BRACKET

(a) Insert the outlet port of the fuel pump into the fuel hose.

(b) Install the rubber cushion to the lower side of the fuel pump.

(c) Push the lower side of the fuel pump, together with the rubber cushion, into the fuel pump bracket.

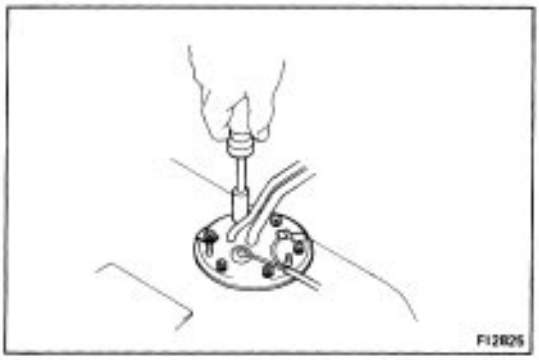

3. INSTALL FUEL PUMP BRACKET

(a) Place the bracket with a new gasket on the fuel tank.

(b) Install and torque the six screws.

Torque: 35 kg–cm (30 in.–lb, 3.4 N–m)

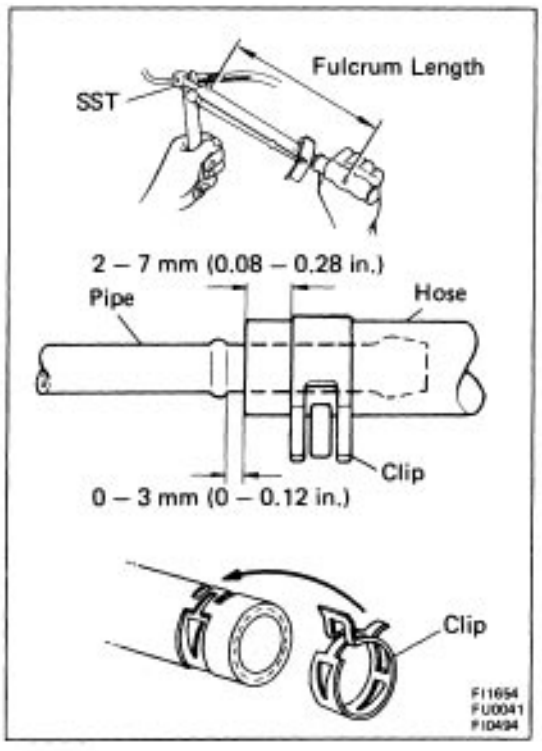

4. INSTALL FUEL TANK

(a) Apply a thin coat of oil to the flare and tighten the flare nut.

(b) Then using SST, tighten the nut to the specified torque.
SST 09631–22020

Torque: 310 kg–cm (22 ft–lb, 30 N–m)

HINT: Use a torque wrench with a fulcrum length of 30 cm (11.81 in.)

NOTICE:

- Tighten the fuel tank mounting bolts, etc. to the specified torque.
- Push in the pipe and insert–type hose to the specified position, and install the clip to the specified location.
- If reusing the hose, reinstall the clip at its original location.

5. REFILL GASOLINE

Cold Start Injector

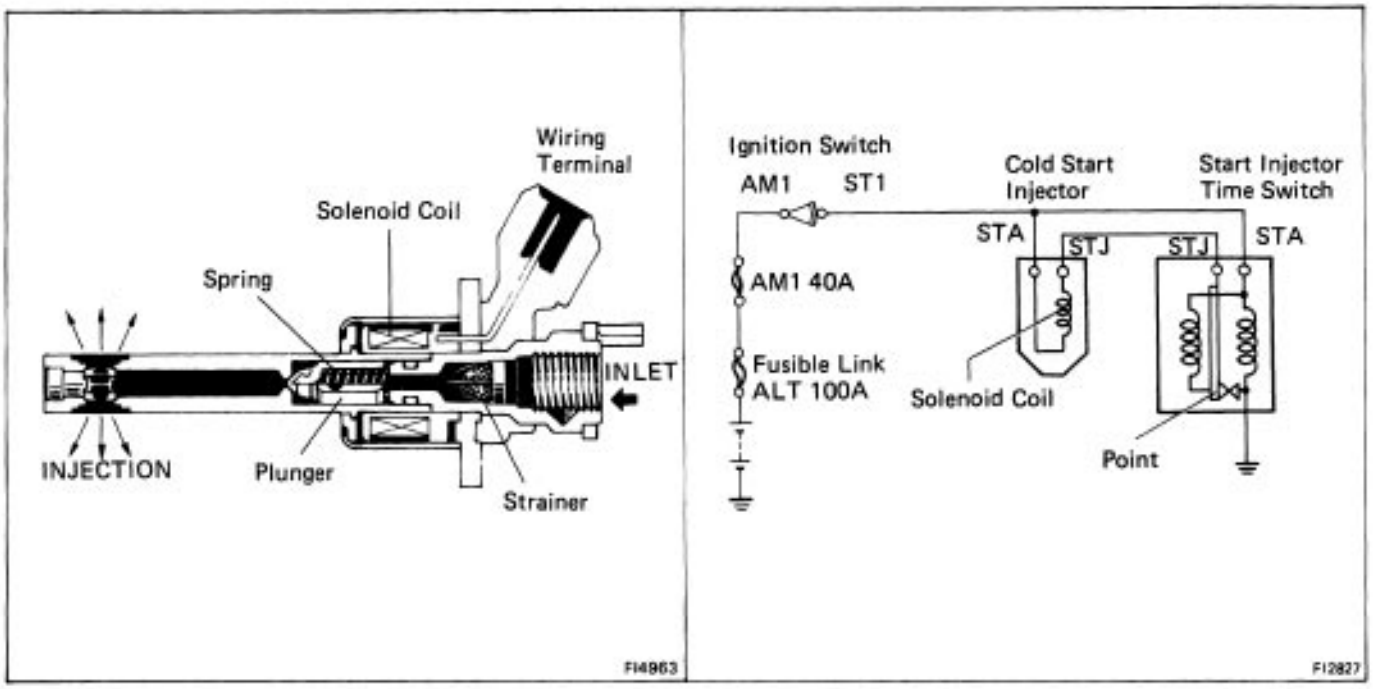

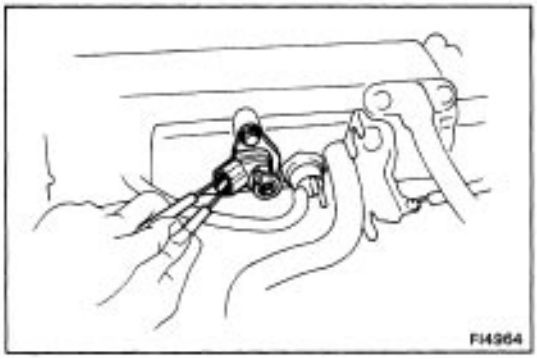

ON–VEHICLE INSPECTION

MEASURE RESISTANCE OF COLD START INJECTOR

(a) Disconnect the cold start injector connector.

(b) Using an ohmmeter, check the resistance of the injector.

Resistance: 3 – 5Ω

(c) Connect the cold start injector connector.

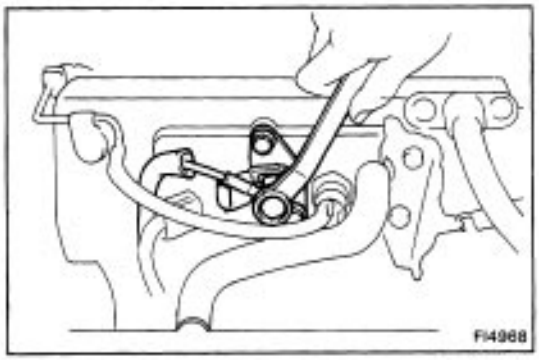

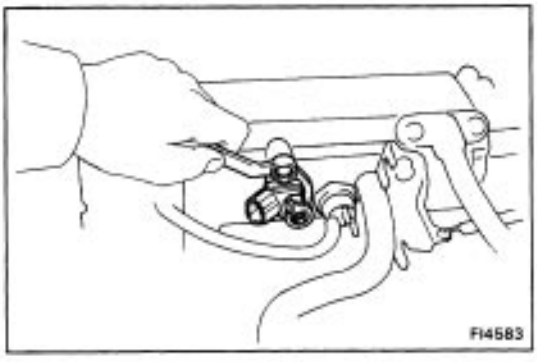

REMOVAL OF COLD START INJECTOR

1. DISCONNECT CABLE FROM NEGATIVE TERMINAL OF BATTERY

2. DISCONNECT COLD START INJECTOR CONNECTOR

3. REMOVE COLD START INJECTOR PIPE

(a) Put a suitable container or shop towel under the cold start injector pipe.

(b) Remove the two union bolts and the cold start injector pipe with the gaskets.

HINT: Slowly loosen the union bolts.

4. REMOVE COLD START INJECTOR

Remove the two bolts and cold start injector with the gasket.

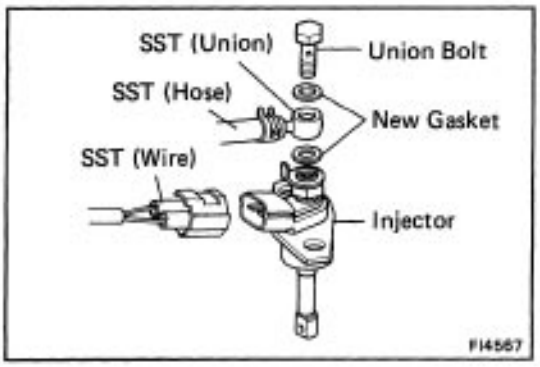

INSPECTION OF COLD START INJECTOR

CHECK INJECTION OF COLD START INJECTOR

(a) Install the gasket, SST (two unions), another gaskets and two union bolts to the delivery pipe and injector.

(b) Connect the SST (Hose) from the unions.
SST 09268–41045 (09268–41080)

(c) Connect the SST (Wire) to the injector.
SST 09842–30055

CAUTION: Position the injector as far away from the battery as possible.

(d) Put a container under the injector.

(e) Turn the ignition switch to ON.

NOTICE: Do not start the engine.

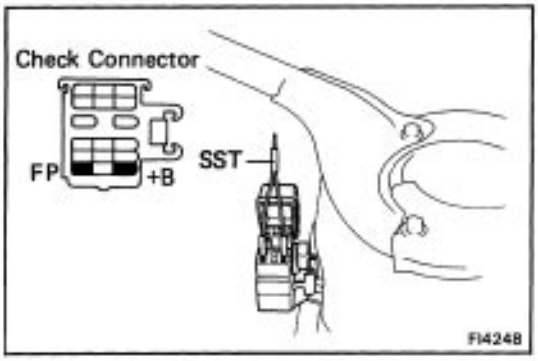

(f) Using SST, connect terminals FP and + B of the fuel pump check connector.
SST 09843–18020
HINT: The check connector is located near the air flow meter.

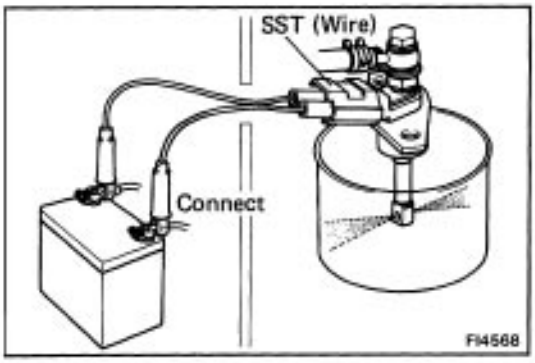

(g) Connect the test probes of the SST to the battery and check that the fuel spray is as shown.
SST 09842–30055
NOTICE: Perform this check within the shortest possible time.

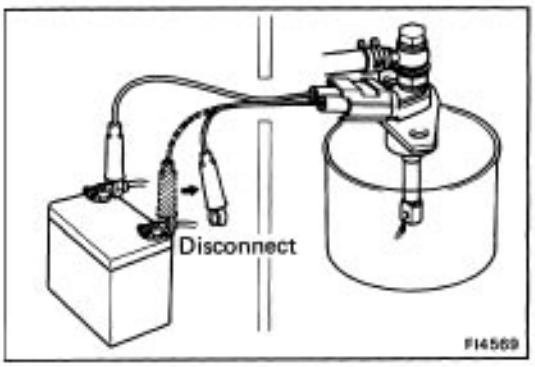

(h) Disconnect the test probes from the battery and check that there is less than one drop of fuel per minute from the injector.

(i) After checking, remove SST and restore the following parts to their original condition.

- Fuel pump check connector
- Ignition switch OFF
- Cold start injector
- Injector wiring

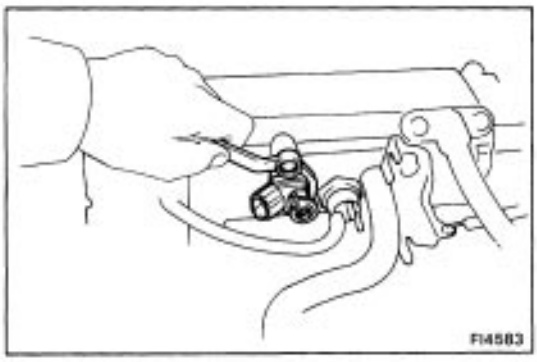

INSTALLATION OF COLD START INJECTOR

1. INSTALL COLD START INJECTOR

Place on a new gasket and install the cold start injector with the two bolts.

Torque: 75 kg–cm (82 in–lb, 9.3 N–m)

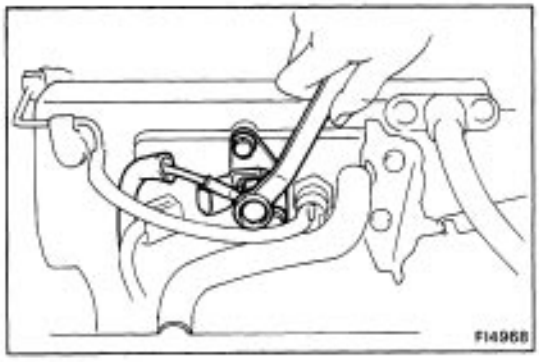

2. INSTALL COLD START INJECTOR PIPE

Using new gaskets, connect the cold start injector pipe to the delivery pipe and cold start injector. Install the union bolts.

Torque: 180 kg–cm (13 ft–lb, 18 N – m)

3. CONNECT COLD START INJECTOR CONNECTOR

4. CONNECT CABLE TO NEGATIVE TERMINAL OF BATTERY

5. CHECK FOR FUEL LEAKAGE (See page FI–89)

Pressure Regulator

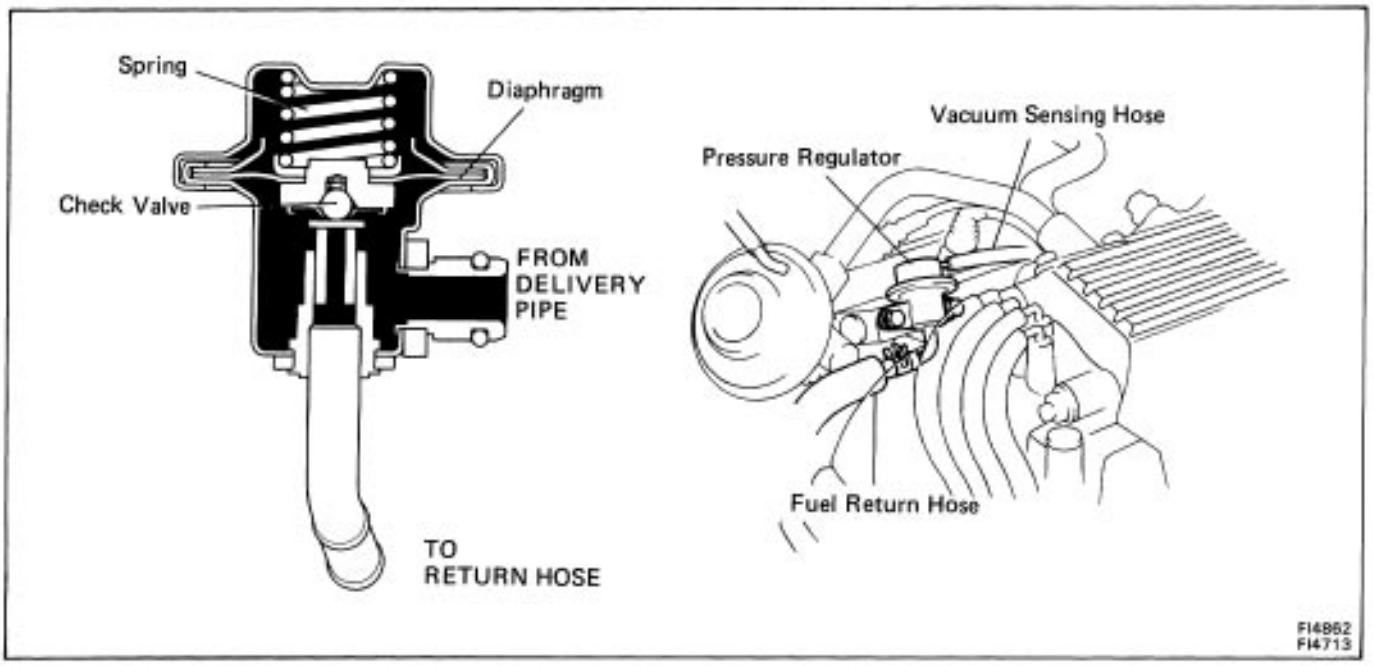

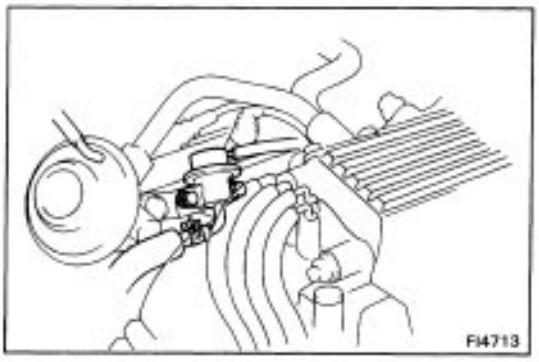

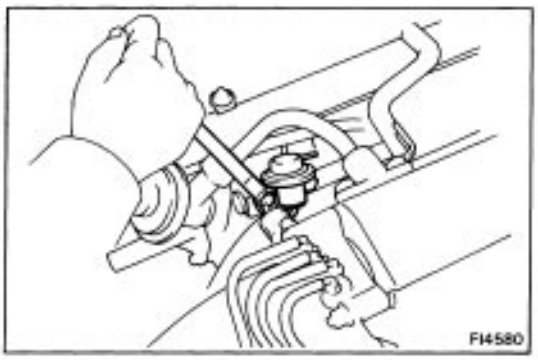

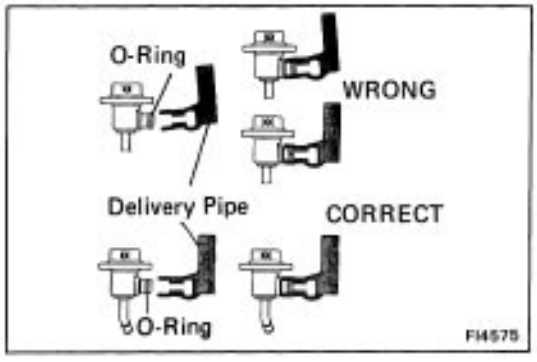

ON–VEHICLE INSPECTION

CHECK FUEL PRESSURE (See page FI–127)

REMOVAL OF PRESSURE REGULATOR

1. DISCONNECT VACUUM SENSING HOSE FROM PRESSURE REGULATOR

2. DISCONNECT FUEL HOSE FROM PRESSURE REGULATOR

(a) Put a suitable container or shop towel under the pressure regulator.

(b) Disconnect the fuel hose from the pressure regulator.

3. REMOVE PRESSURE REGULATOR

Remove the two bolts and pull out the pressure regulator from the delivery pipe.

INSTALLATION OF PRESSURE REGULATOR

1. INSTALL PRESSURE REGULATOR

Install the pressure regulator and torque the two bolts.

Torque: 75 kg–cm (65 in.–lb, 7.4 N–m)

2. CONNECT FUEL HOSE

3. CONNECT VACUUM SENSING HOSE

4. CHECK FOR FUEL LEAKAGE (See page FI–89)

Injector

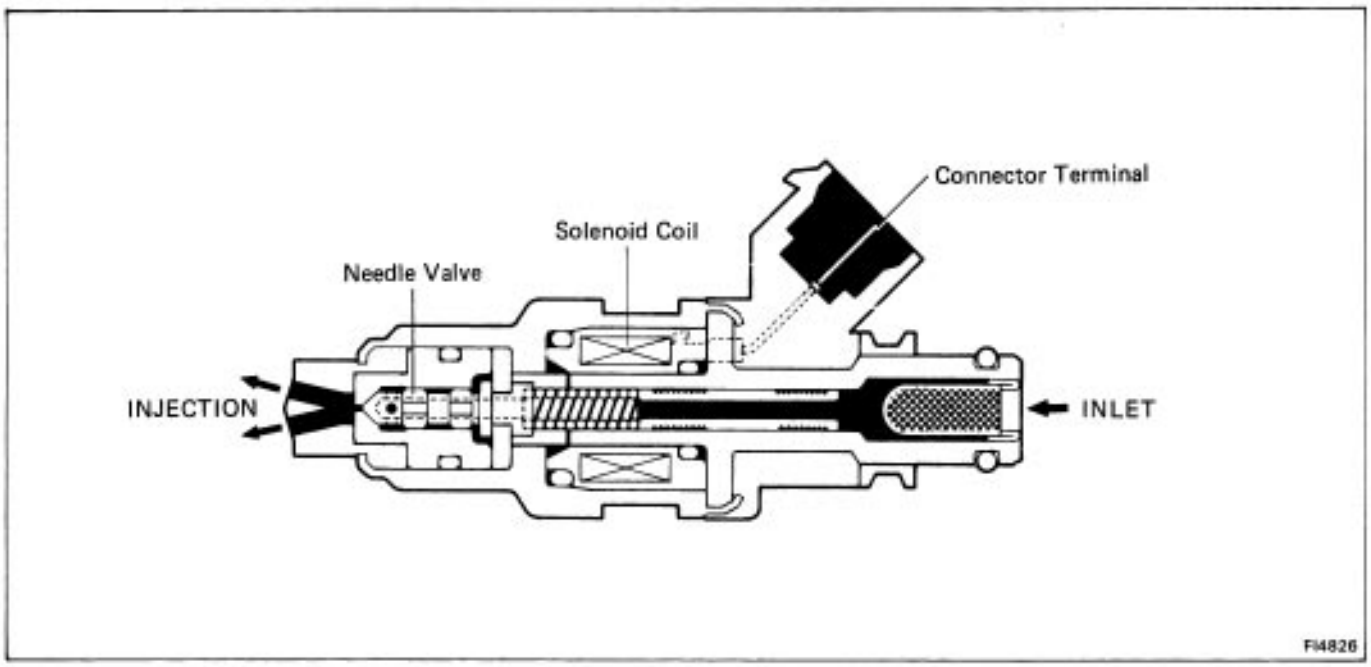

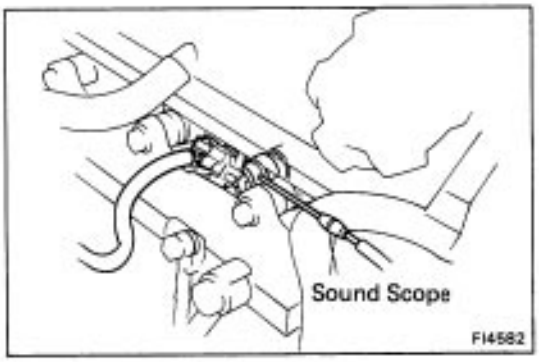

ON–VEHICLE INSPECTION

1. CHECK INJECTOR OPERATION

Check the operating sound from each injector.

(a) With the engine running or cranking, use a sound scope to check that there is normal operating noise in proportion to engine rpm.

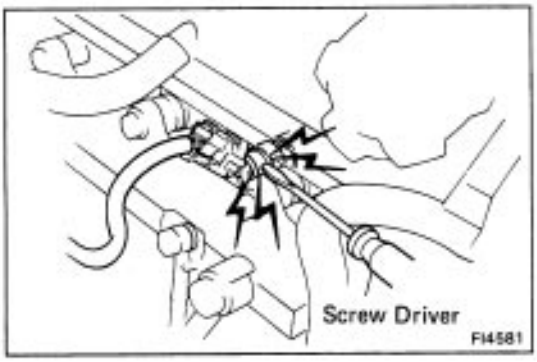

(b) If you have no sound scope, you can check the injector transmission operation with screw driver.
If no sound or an unusual sound is heard, check the wiring connector, injector, resistor or injection signal from the computer.

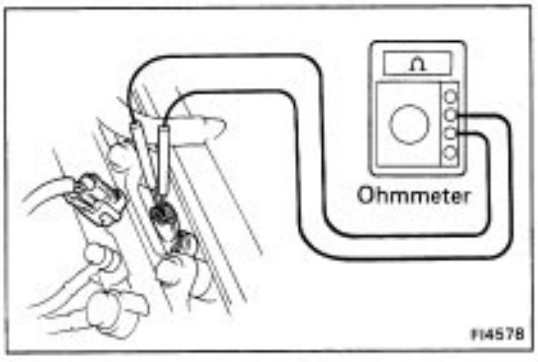

2. MEASURE RESISTANCE OF INJECTOR

(a) Disconnect the injector connector.

(b) Using an ohmmeter, check the resistance of both terminals.

Resistance: Approx. 13.8/

REMOVAL OF INJECTOR

1. DISCONNECT CABLE FROM NEGATIVE TERMINAL OF BATTERY

2. DISCONNECT FOLLOWING HOSES:

(a) PCV hose from cylinder head cover

(b) Vacuum sensing hose from pressure regulator

(c) Fuel return hose from pressure regulator

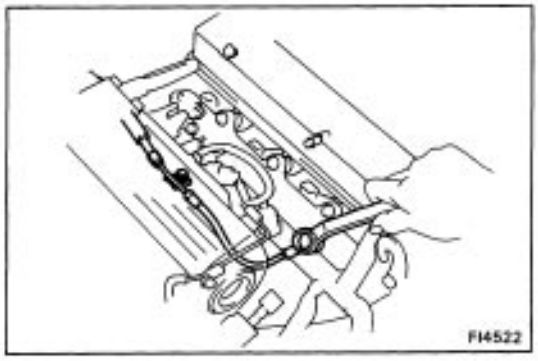

3. REMOVE COLD START INJECTION PIPE

(See step 3 on page FI–132)

4. DISCONNECT FUEL INLET HOSE

(a) Remove the inlet pipe mounting bolt.

(b) Remove the union blot, two gasket and inlet pipe.

5. DISCONNECT INJECTOR CONNECTORS

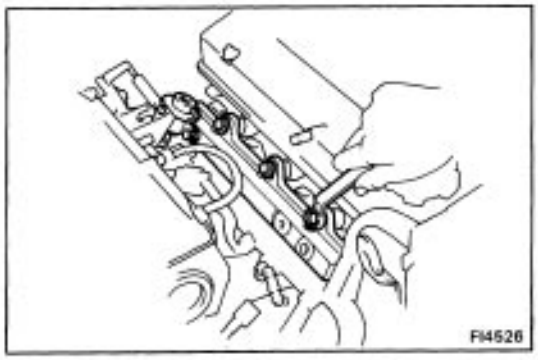

6. REMOVE DELIVERY PIPE

(a) Remove the three bolts, and then remove the delivery pipe with the injectors.

HINT: When removing the delivery pipe, be careful not to drop the injectors.

(b) Remove the four insulators and three collars from the cylinder head.

7. REMOVE INJECTORS

Pull out the injectors from the delivery pipe.

INSPECTION OF INJECTOR

1. TEST INJECTION OF INJECTORS

CAUTION: Keep clear for sparks during the test.

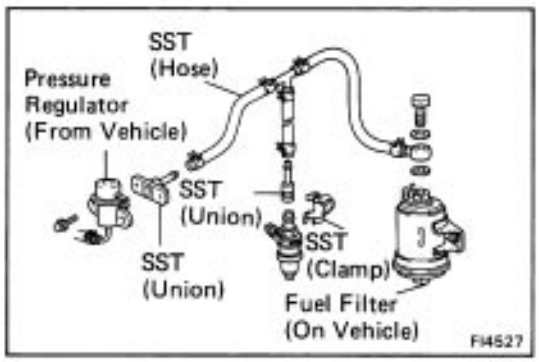

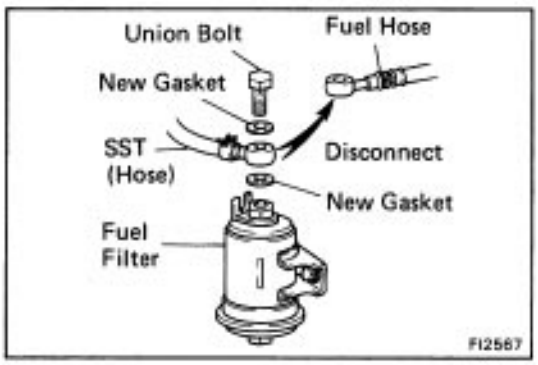

(a) Disconnect the fuel hose from the fuel filter outlet.
(b) Connect the SST (Union) to the fuel filter outlet.
SST 09268–41045 (90405–09015)
HINT: Use the vehicle's fuel filter.

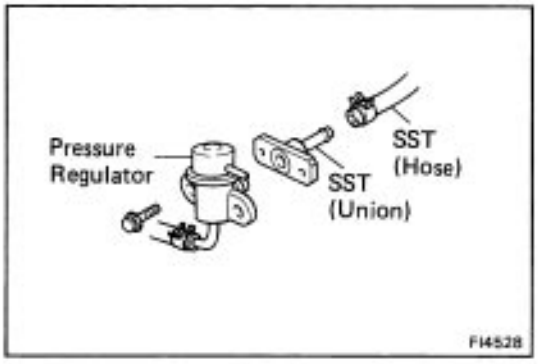

(c) Install SST (Union) to the removed pressure regulator with two bolts.
SST 09268–41045 (09268–41090)

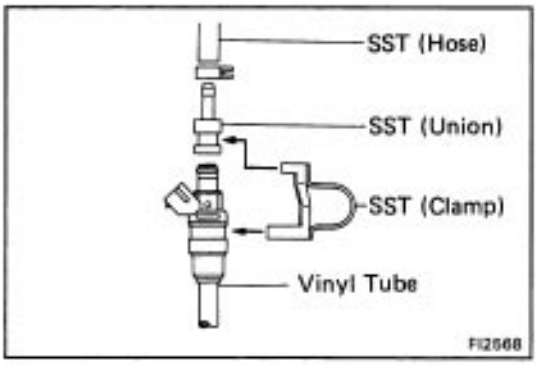

(d) Install SST (Union) to the injector and hold the injector and union with SST (Clamp).
SST 09268–41045
(e) Put the injector into the graduated cylinder.
HINT: Install a suitable vinyl tube into the injector to prevent gasoline from splashing out.

(f) Connect the battery cable.
(g) Turn the ignition switch ON.
NOTICE: Do not start the engine.

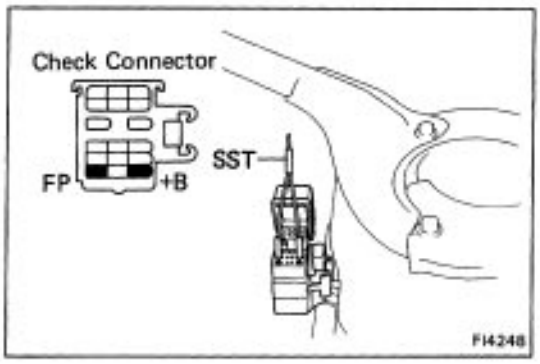

(h) Using SST, connect terminal FP and + B of the fuel pump check connector.
SST 09843–18020
HINT: The check connector is located near the air flow meter.

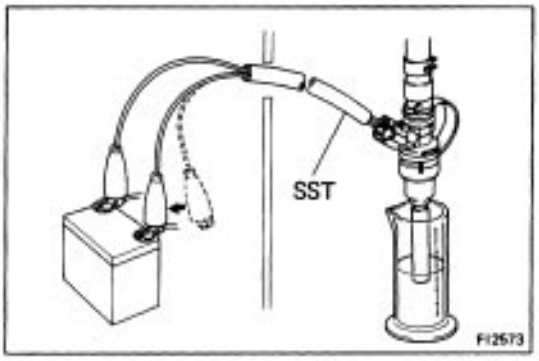

(i) Connect SST (Resistor Wire) to the injector and battery for 15 seconds and measure the injection volume with a graduated cylinder.
Test each injector two or three times. If not within specified volume, replace the injector.
SST 09842–30070
Volume: 45 – 55 cc/15 sec. (2.7 – 3.4 cu in.)
Difference between each injector:
5 cc (0.3 cu in.) or less

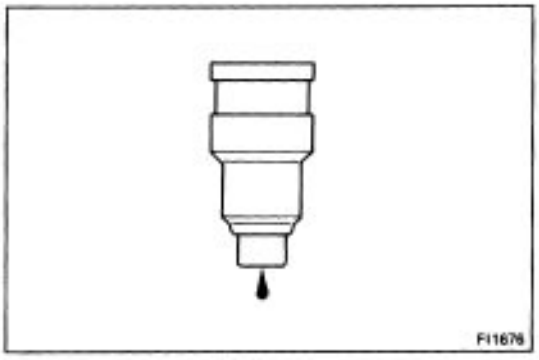

2. CHECK LEAKAGE

(a) In the condition above, disconnect SST from the battery and check for fuel leakage from the injector nozzle.
SST 09842–30070
Fuel drop: One fuel drop of fuel or less per minute

(b) Disconnect the battery cable.
(c) Remove the SST and disconnect the service wire.
SST 09268–41045

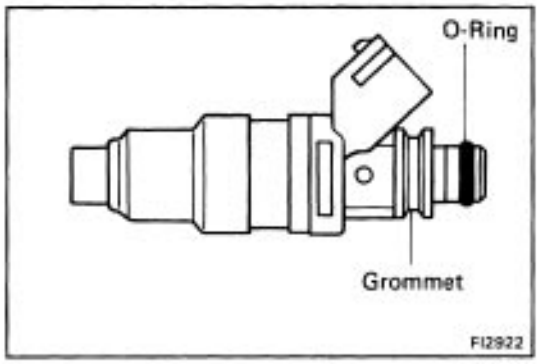

INSTALLATION OF INJECTORS

1. INSTALL INJECTORS INTO DELIVERY PIPE

(a) Replace a new O–ring on to the injector.

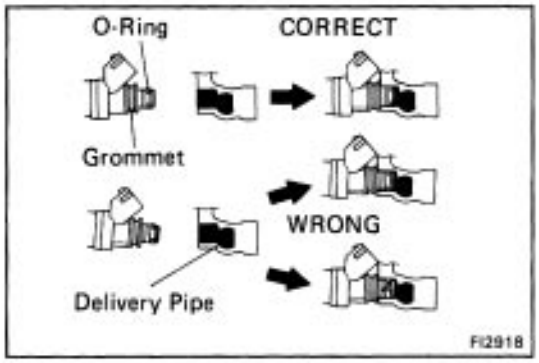

(b) Apply a thin coat of gasoline to the O–rings and install the injectors into the delivery pipe.

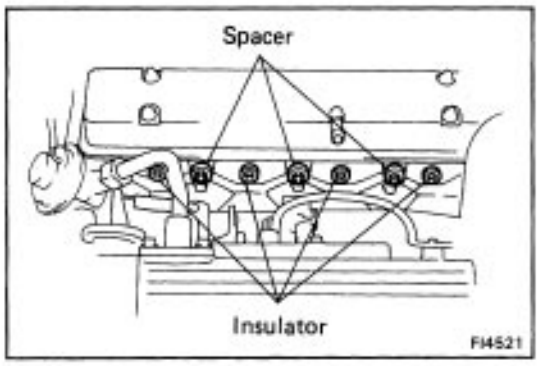

2. INSTALL DELIVERY PIPE WITH INJECTORS

(a) Install the four insulators into the injector hole of the cylinder head.

(b) Install the three spacer on the delivery pipe mounting hole of the cylinder head.

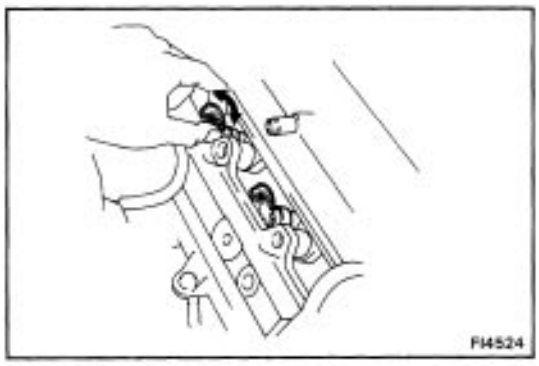

(c) Place the injectors together with the delivery pipe on the cylinder head.

(d) Make sure that the injectors rotate smoothly.

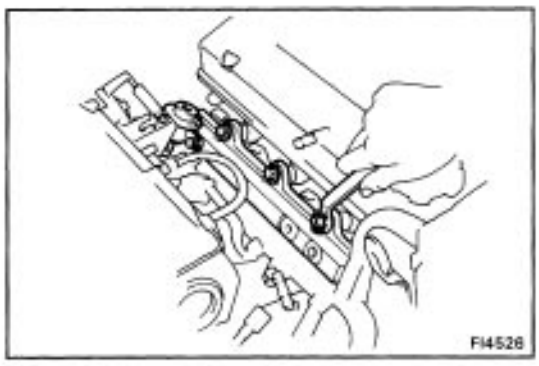

(e) Install and torque the three bolts.

Torque: 175 kg–cm (13 ft–lb, 17 N –M)

3. CONNECT INJECTOR CONNECTORS

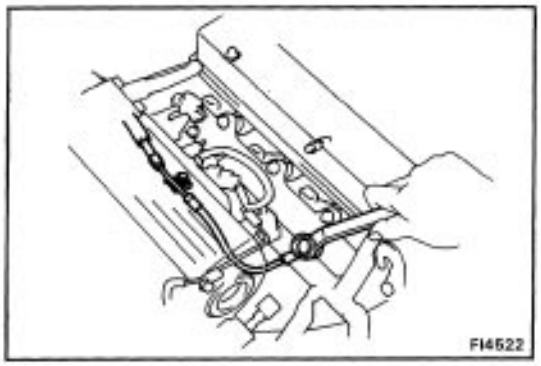

4. CONNECT FUEL INLET HOSE

(a) Install two new gaskets, the inlet pipe and union bolt.
Torque: 300 kg–cm (22 ft–lb, 29 N–m)

(b) Install the mount bolt.

5. INSTALL COLD START INJECTION PIPE
(See steps 2 on page FI–134)

6. CONNECT FOLLOWING HOSES:

(a) Fuel return hose to the pressure regulator.
(b) Vacuum sensing hose to the pressure regulator.
(c) PCV hose to the cylinder head cover.

7. CONNECT CABLE TO NEGATIVE TERMINAL OF BATTERY

8. CHECK FOR FUEL LEAKAGE (See page FI–89)

Fuel Tank and Line

COMPONENTS

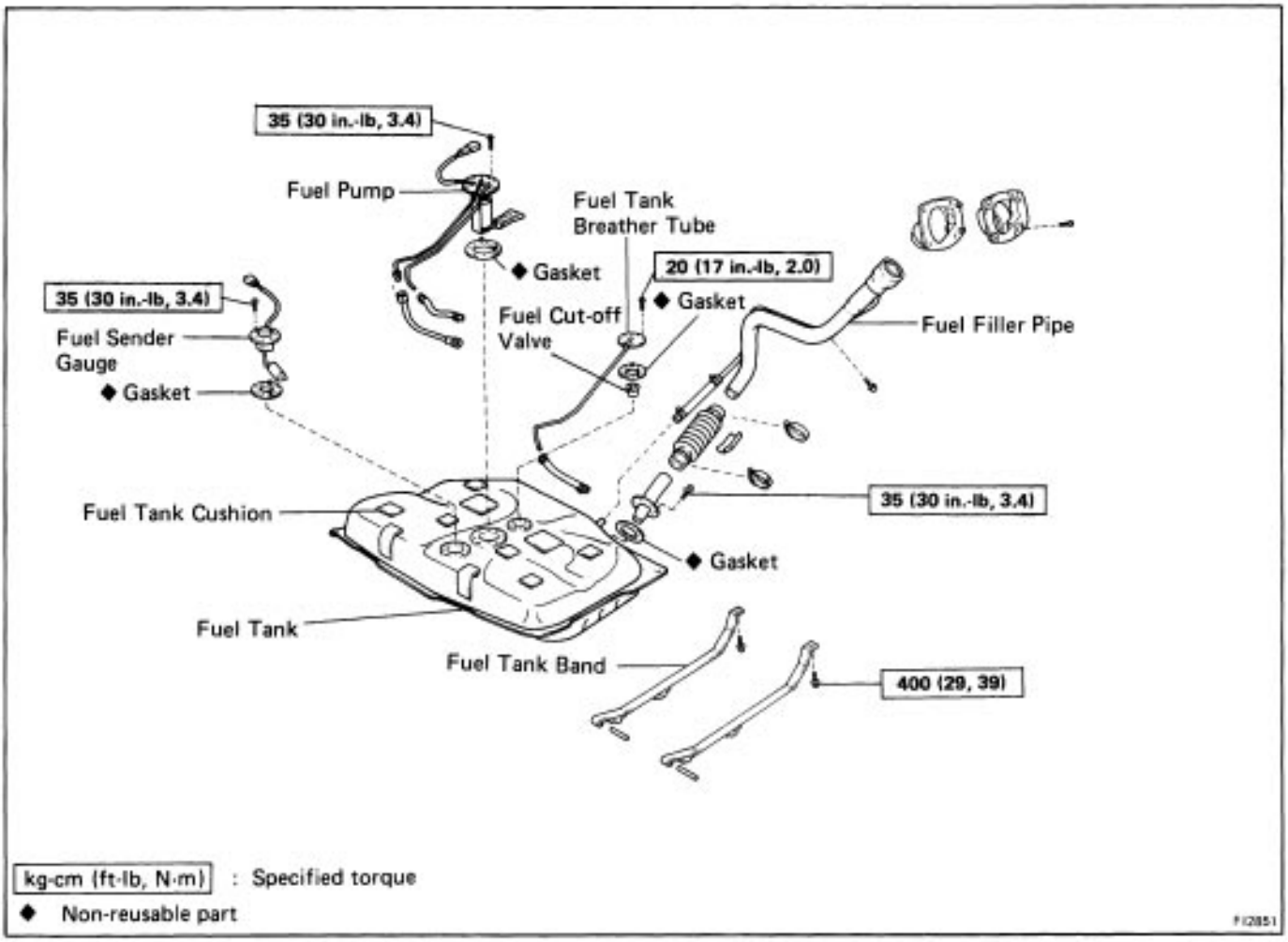

PRECAUTIONS

1. Always use new gaskets when replacing the fuel tank or component parts.

2. When reinstalling, be sure to include the rubber protectors
on the upper surfaces of the fuel tank and tank band.

3. Apply the proper torque to all tightening parts.
Torque: 400 kg–cm (29 ft–lb, 39 N–m)

INSPECT FUEL LINES AND CONNECTIONS

(a) Inspect the fuel lines and connections for cracks, leakage or deformation.

(b) Inspect the fuel tank vapor vent system hoses and connections for looseness, sharp bends or damage.

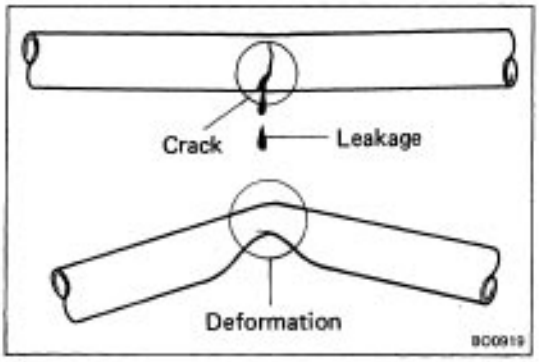

(c) Inspect the fuel tank for deformation, cracks, fuel leakage or tank band looseness.

(d) Inspect the filler neck for damage or fuel leakage.

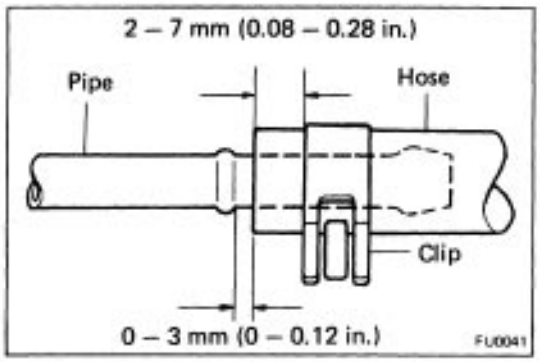

(e) Hose and tube connections are as shown in the illustration.

If a problem is found, repair or replace the parts as necessary.

AIR INDUCTION SYSTEM

Air Flow Meter

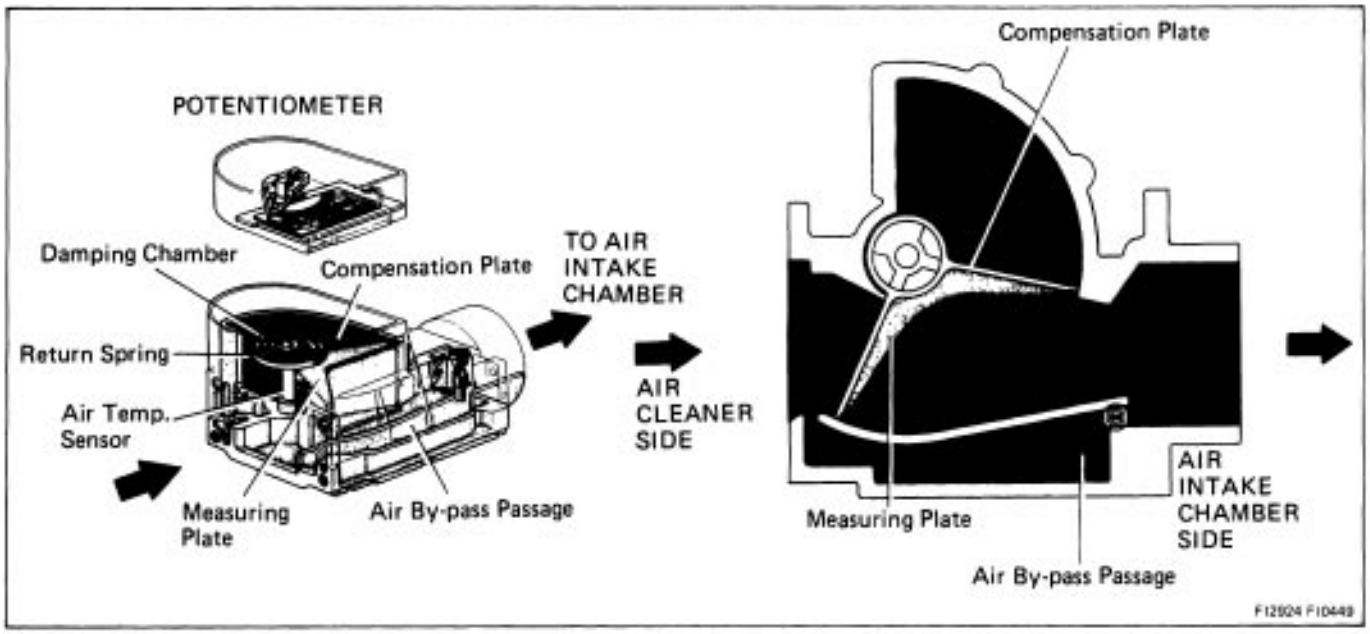

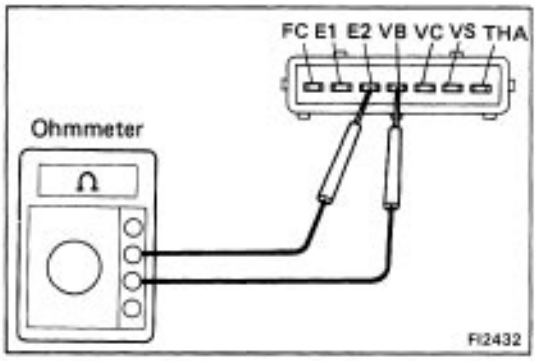

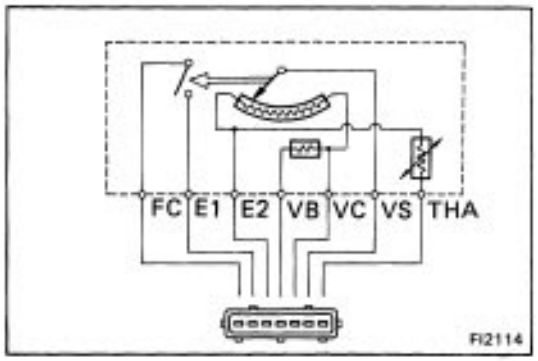

ON–VEHICLE INSPECTION

MEASURE RESISTANCE OF AIR FLOW METER

(a) Unplug the wiring connector from the air flow meter.

(b) Using an ohmmeter, measure the resistance between each terminal.

Between terminals	Resistance	Temperature
VS – E2	20 – 3,000 Ω	–
VC – E2	100 – 300 Ω	–
VB – E2	200 – 400 Ω	–
THA – E2	10 – 20 kΩ 4 – 7 kΩ 2 – 3 kΩ 0.9 – 1.3 kΩ 0.4 – 0.7 kΩ	– 20°C (–4°F) 0°C (32°F) 20°C (68°F) 40°C (104°F) 60°C (204°F)
FC – E1	Infinity	–

If the resistance is not as specified, replace the air flow meter.

(c) Reconnect the air flow meter connector.

REMOVAL OF AIR FLOW METER

1. DISCONNECT AIR CLEANER HOSE

2. REMOVE VSV (IDLE–UP)

3. DISCONNECT AIR FLOW METER CONNECTOR

4. REMOVE AIR CLEANER CAP WITH AIR FLOW METER

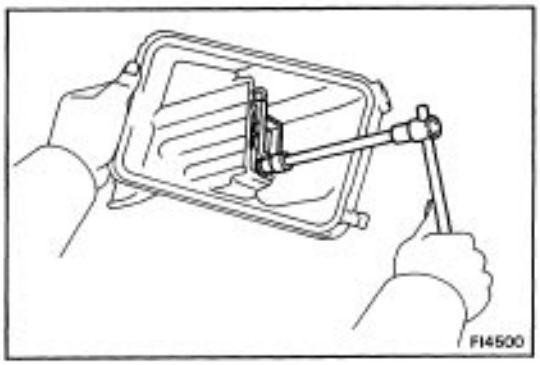

5. REMOVE AIR FLOW METER

Pry off the lock plate, and remove the four nuts, lock plate air flow meter and gasket.

INSPECTION OF AIR FLOW METER

MEASURE RESISTANCE OF AIR FLOW METER

Using an ohmmeter, measure the resistance between each terminal by moving the measuring plate.

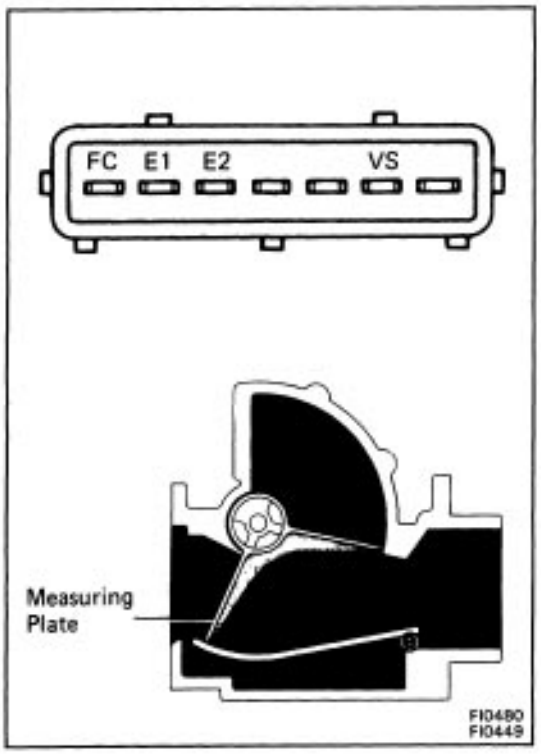

Between terminals	Resistance Ω	Measuring plate Opening
FC – E1	Infinity	Fully closed
	Zero	Other than closed position
VS – E2	20 – 400	Fully closed
	20 – 3,000	Fully open

HINT: Resistance between terminals E2 and VS will change in a wave pattern as the measuring plate slowly opens.

If the resistance is not as specified, replace the air flow meter.

INSTALLATION OF AIR FLOW METER

1. INSTALL AIR FLOW METER

Install the gasket and air flow meter with the lock plate and four nuts.

Pry the lock plate on the nut.

2. INSTALL AIR CLEANER WITH AIR FLOW METER

3. CONNECT AIR FLOW METER CONNECTOR

4. INSTALL VSV (IDLE–UP)

5. CONNECT AIR CLEANER HOSE

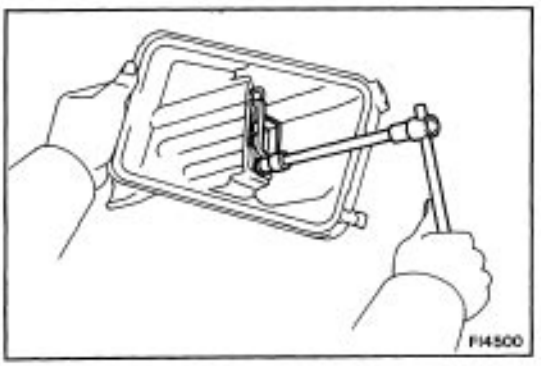

Throttle Body

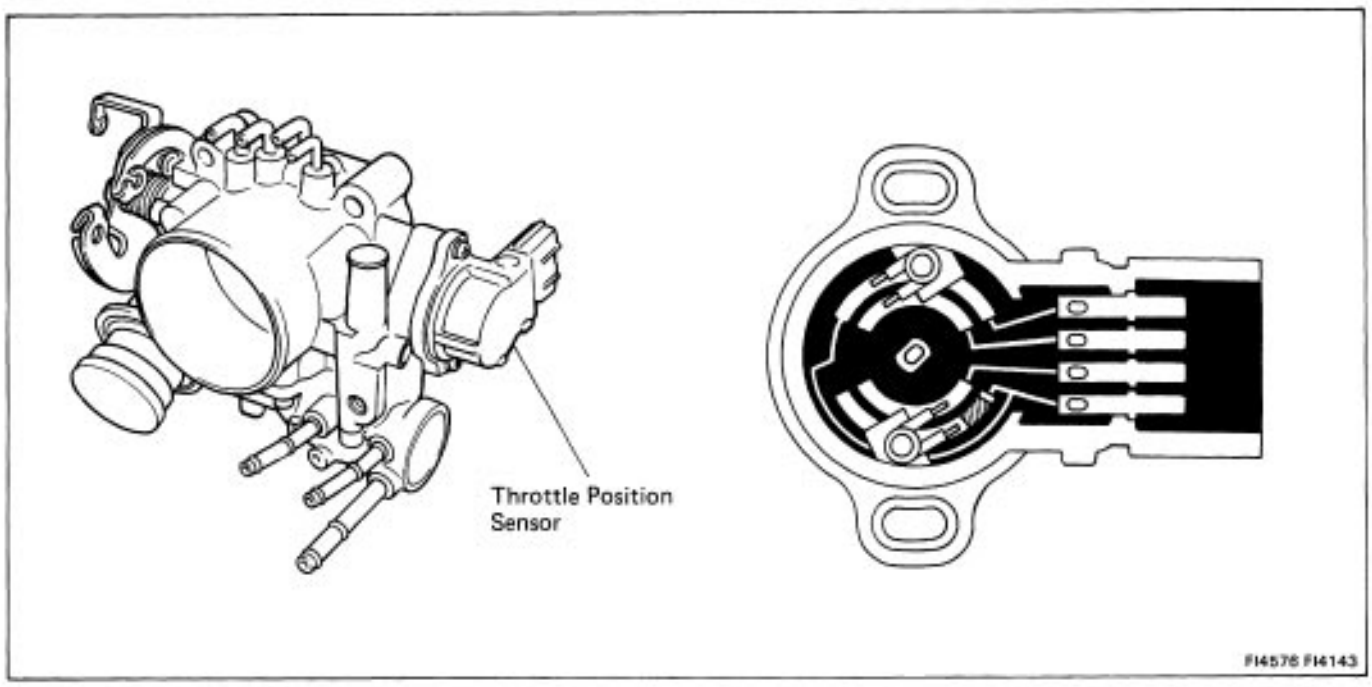

ON–VEHICLE CHECK

1. CHECK THROTTLE BODY

(a) Check that the throttle linkage moves smoothly.

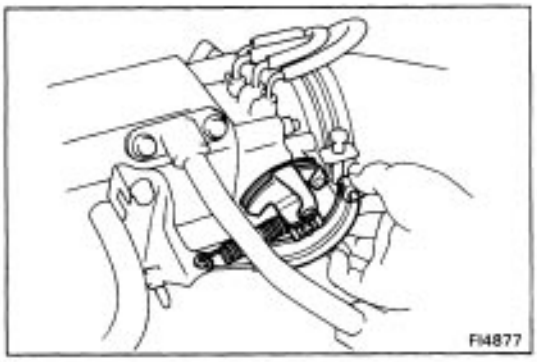

(b) Check the vacuum at N port.

- Start the engine.
- Check the vacuum with your finger.

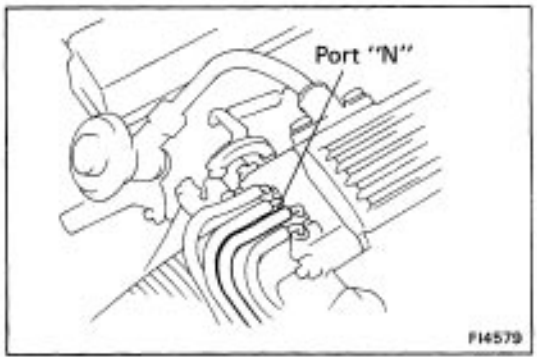

2. CHECK THROTTLE POSITION SENSOR

Check the resistance between the terminals.

- Unplug the connector from the sensor.
- Insert a thickness gauge between the throttle stop screw and stop lever.
- Using an ohmmeter, check the resistance between each terminal.

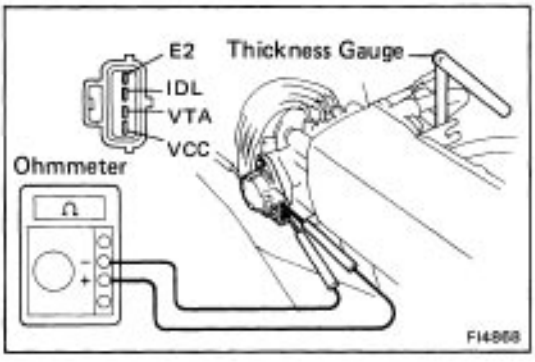

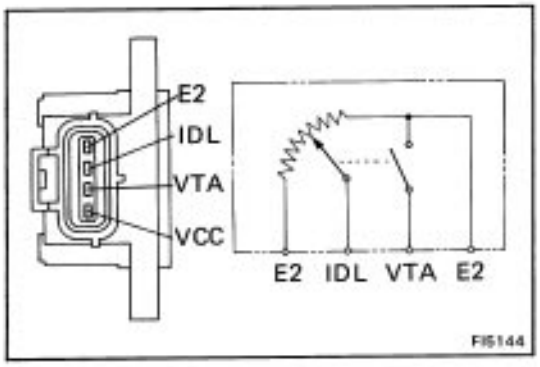

Clearance between lever and stop screw	Between terminals	Resistance
0 mm (0 in.)	VTA – E2	0.2 – 0.8 kΩ
0.35 mm (0.0138 in.)	IDL – E2	Less than 2.3 kΩ
0.59 mm (0.0232 in.)	IDL – E2	Infinity
Throttle valve fully opened position	VTA – E2	3.3 – 10 kΩ
–	VCC – E2	3 – 7 kΩ

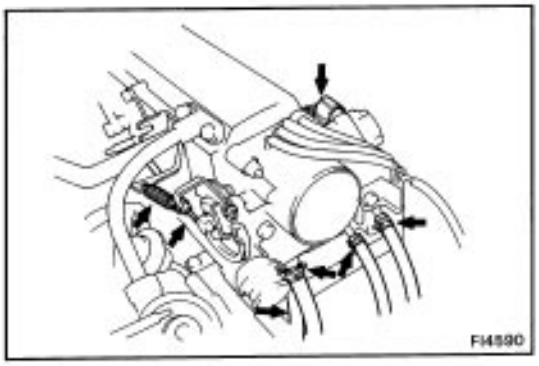

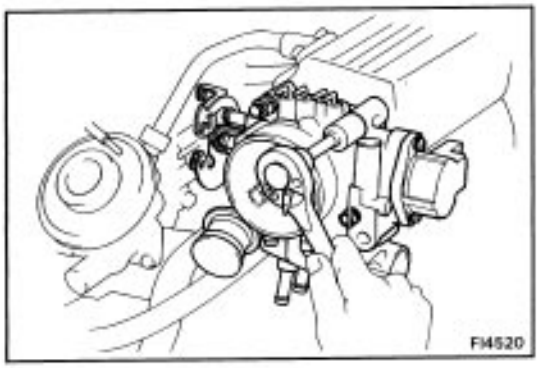

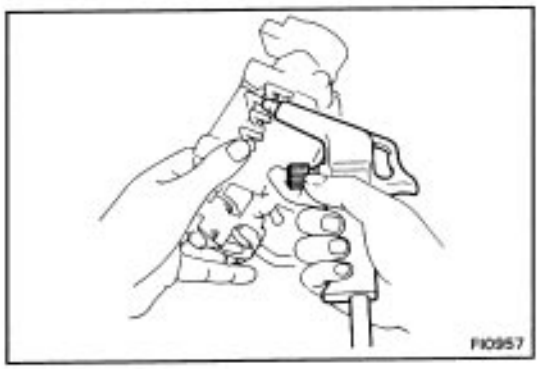

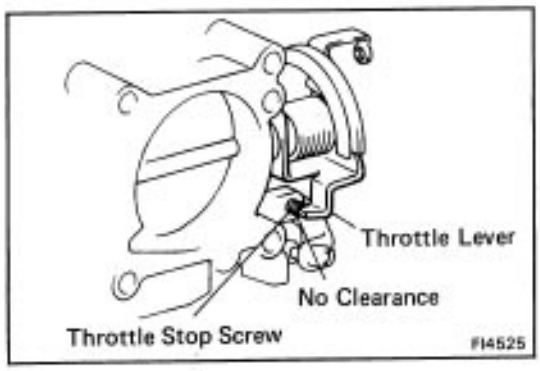

REMOVAL OF THROTTLE BODY

1. DISCONNECT CABLE FROM NEGATIVE TERMINAL OF BATTERY

2. DRAIN COOLANT FROM THROTTLE BODY

3. DISCONNECT AIR CLEANER HOSE

4. REMOVE ACCELERATOR RETURN SPRING

5. DISCONNECT ACCELERATOR WIRE

6. DISCONNECT THROTTLE POSITION SENSOR CONNECTOR

7. DISCONNECT WATER HOSES FROM AIR VALVE

8. REMOVE VACUUM PIPE

(a) Disconnect the vacuum hoses from the four ports.

(b) Remove the three bolts and vacuum pipe.

9. REMOVE THROTTLE BODY

Remove the two bolts, two nuts and the throttle body with the gasket.

INSPECTION OF THROTTLE BODY

1. CLEAN THROTTLE BODY BEFORE INSPECTION

(a) Wash and clean the cast parts with a soft brush and carburetor cleaner.

(b) Using compressed air, blow all passages and apertures in the throttle body.

NOTICE: To prevent deterioration, do not clean the throttle position sensor and dash pot.

2. CHECK THROTTLE VALVE

Check that there is no clearance between the throttle stop screw and throttle lever when the throttle valve is fully closed.

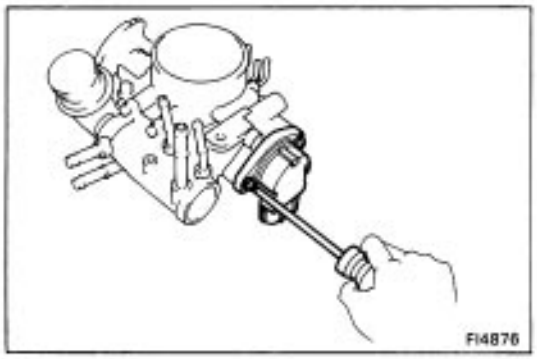

3. CHECK THROTTLE POSITION SENSOR

(See step 2 on page FI–146)

4. IF NECESSARY ADJUST THROTTLE POSITION SENSOR

(a) Loosen the two screws of the sensor.

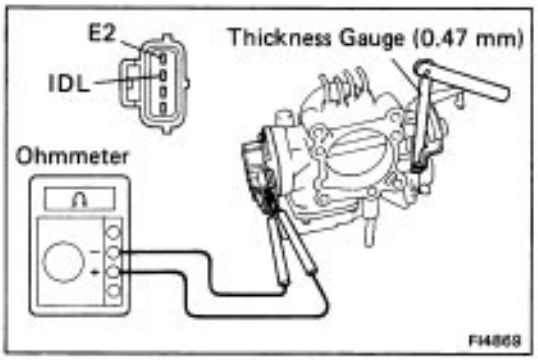

(b) Insert a thickness gauge (0.47 mm or 0.0185 in.) between the throttle stop screw and lever, and connect the ohmmeter to terminals IDL and E2.
Gradually turn the sensor clockwise until the ohmmeter deflects, and secure the sensor with two screws.

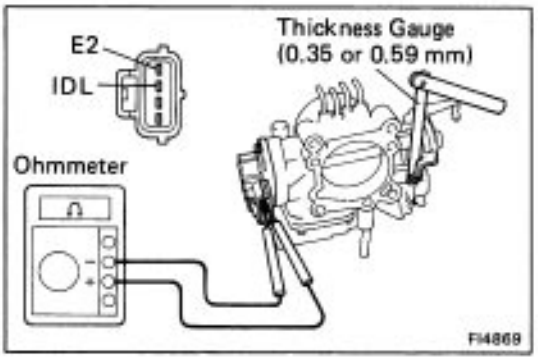

(c) Using a thickness gauge, recheck the continuity between terminals IDL and E2.

Clearance between lever and stop screw	Continuity (IDL – E2)
0.35 mm (0.0138 in.)	Continuity
0.59 mm (0.0232 in.)	No continuity

DISASSEMBLY OF THROTTLE BODY

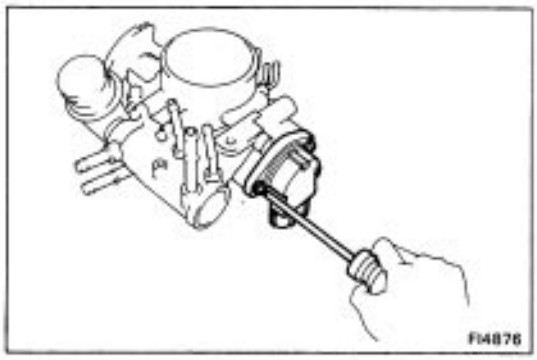

1. REMOVE THROTTLE POSITION SENSOR

Remove the two screws and sensor.

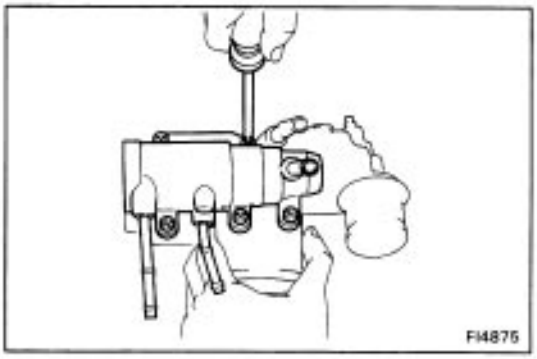

2. REMOVE AUXILIARY AIR VALVE

Remove the five screws, air valve, gasket and o–ring.

3. REMOVE DASH POT

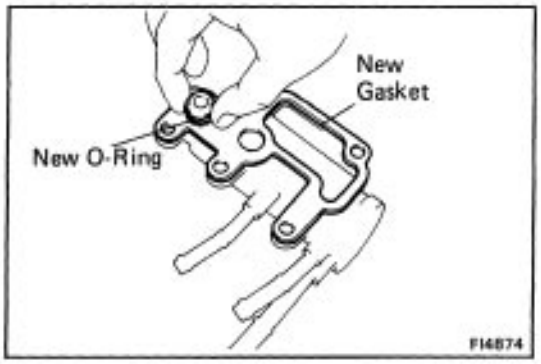

ASSEMBLY OF THROTTLE BODY

1. INSTALL DASH POT

2. INSTALL AUXILIARY AIR VALVE

(a) Place new gasket and 0–ring on the throttle body.

(b) Install the air valve with five screws.

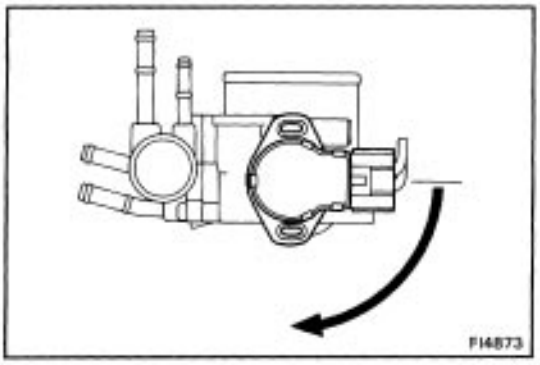

3. INSTALL THROTTLE POSITION SENSOR

(a) Check that the throttle valve is fully closed.

(b) Place the sensor on the throttle body as shown in the figure.

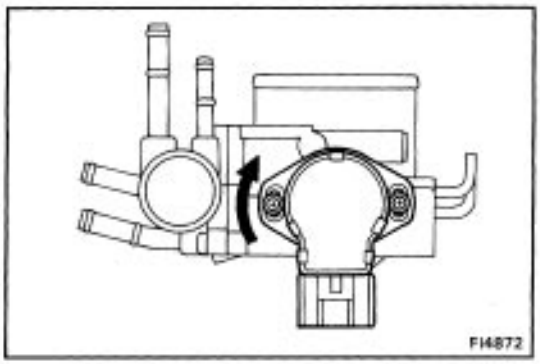

(c) Turn the sensor clockwise, and temporarily install the two screws.

4. ADJUST THROTTLE POSITION SENSOR

(See step 4 on page FI–148)

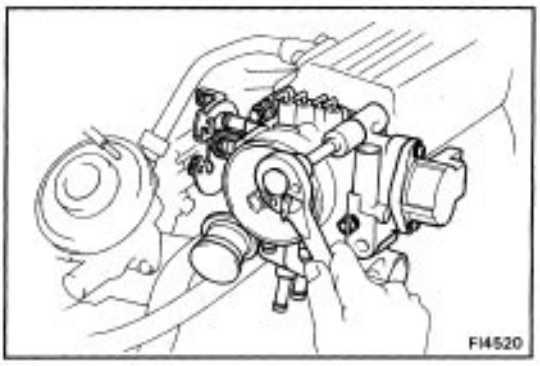

INSTALLATION OF THROTTLE BODY

1. INSTALL THROTTLE BODY

Place on a new gasket and install the throttle body with two bolts and two nuts.

Torque: 220 kg–cm (16 ft–lb, 22 N–m)

2. INSTALL VACUUM PIPE

(a) Install the vacuum pipe with the three bolts.

(b) Connect the vacuum pipes.

3. CONNECT WATER HOSES TO AIR VALVE

4. CONNECT THROTTLE POSITION SENSOR CONNECTOR

5. CONNECT ACCELERATOR WIRE

6. INSTALL ACCELERATOR RETURN SPRING

7. CONNECT AIR CLEANER HOSE

8. CONNECT CABLE TO NEGATIVE TERMINAL OF BATTERY

9. REFILL WITH COOLANT (See page CO–5)

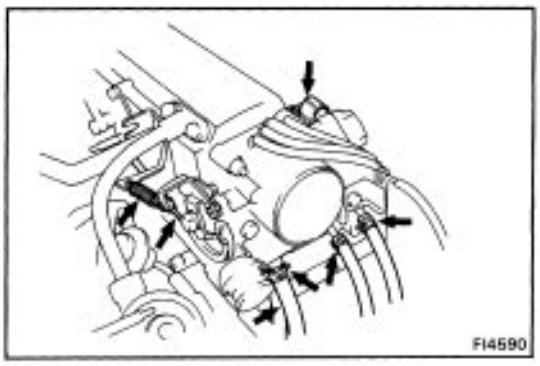

Auxiliary Air Valve

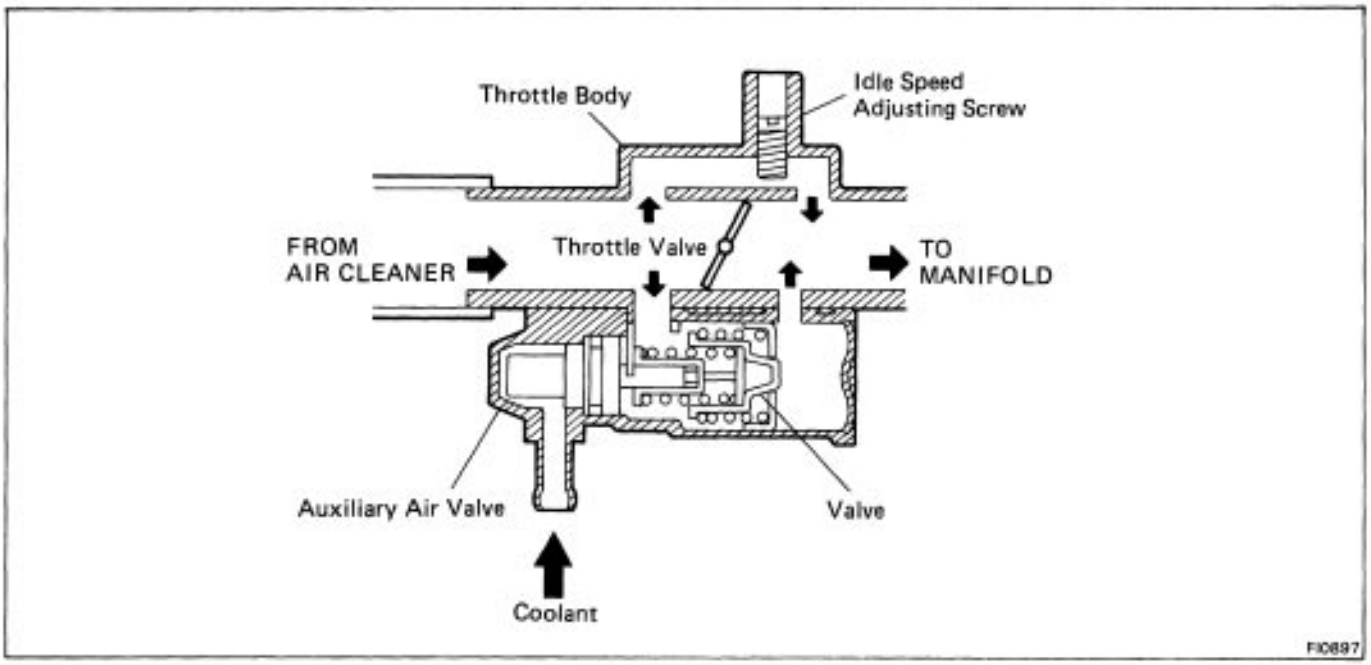

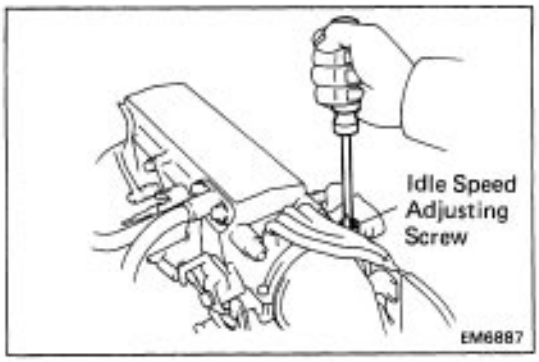

ON–VEHICLE INSPECTION

CHECK OPERATION OF AUXILIARY AIR VALVE

Check the engine rpm by fully screwing in the idle speed adjusting screw.

At low temp. (Coolant temp.: below 80˚C or 176˚F)

- When the idle speed adjusting screw is in, the engine rpm should drop.

After warm–up

- When the idle speed adjusting screw is in, the engine rpm should drop below idle speed stop.

REMOVAL OF AUXILIARY AIR VALVE

1. REMOVE THROTTLE BODY (See page FI–147)

2. REMOVE AUXILIARY AIR VALVE (See step 2 on page FI–148)

INSTALLATION OF AUXILIARY AIR VALVE

1. INSTALL AUXILIARY AIR VALVE
(See step 2 on page FI–149)

2. INSTALL THROTTLE BODY (See page FI–149)

ELECTRONIC CONTROL SYSTEM

Location of Electronic Control Parts

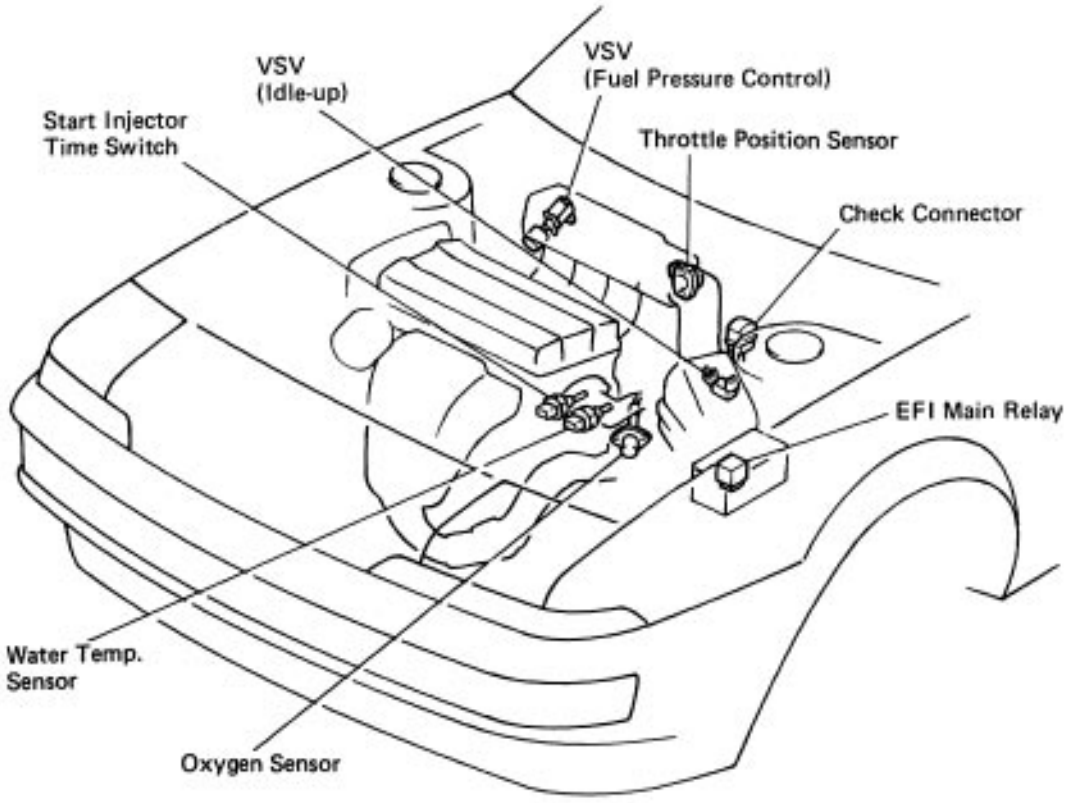

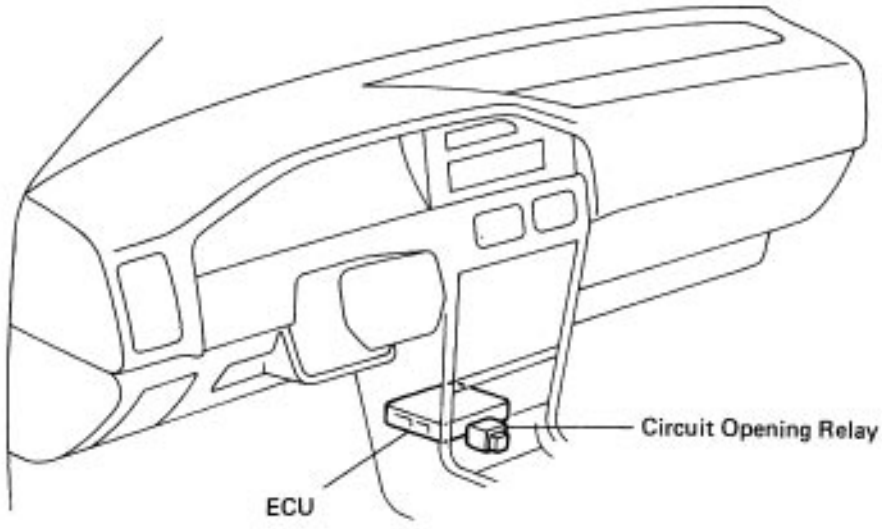

FI2808
FI4690

EFI Main Relay

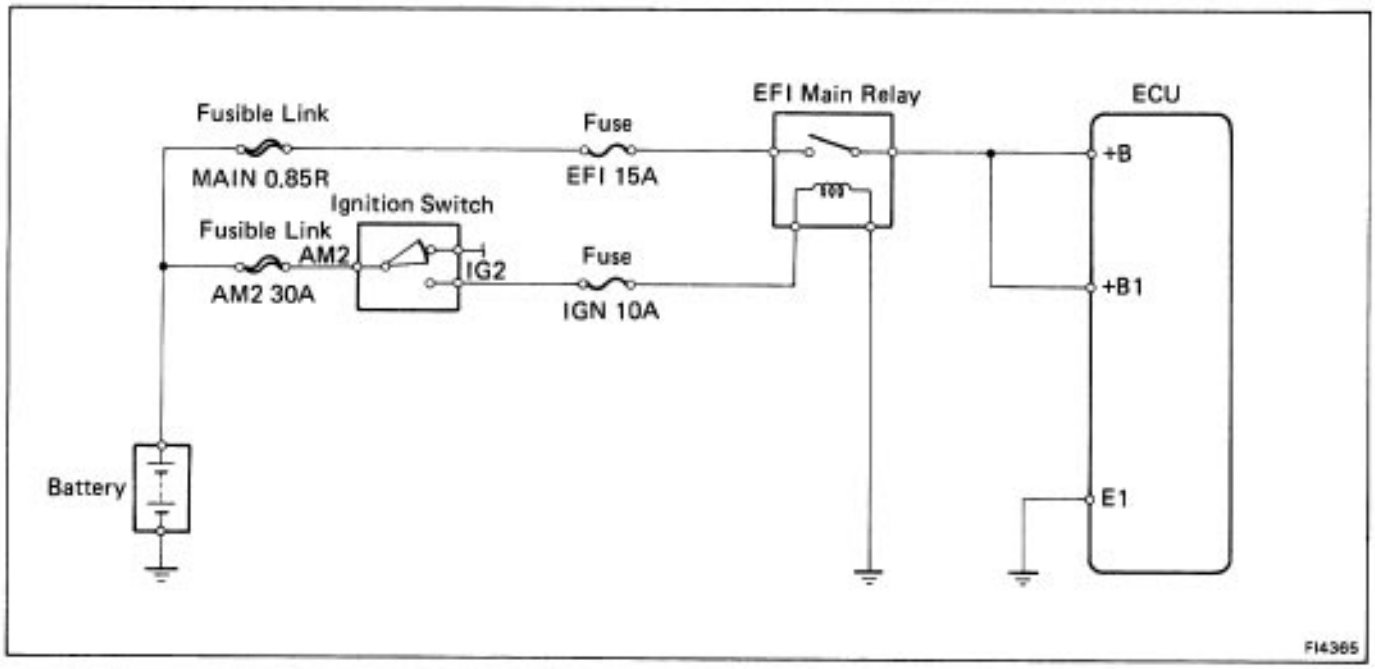

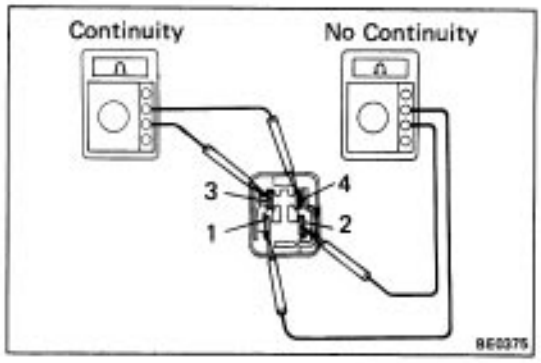

INSPECTION OF EFI MAIN RELAY

1. INSPECT RELAY CONTINUITY

(a) Check that there is continuity between terminals 3 and 4.

(b) Check that there is no continuity between terminals 1 and 2.

If continuity is not as specified, replace the relay.

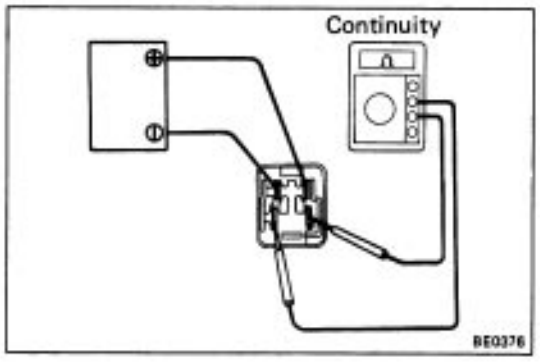

2. INSPECT RELAY OPERATION

(a) Apply battery voltage across terminals 3 and 4.

(b) Check that there is continuity between terminals 1 and 2.

If operation is not as specified, replace the relay.

Circuit Opening Relay

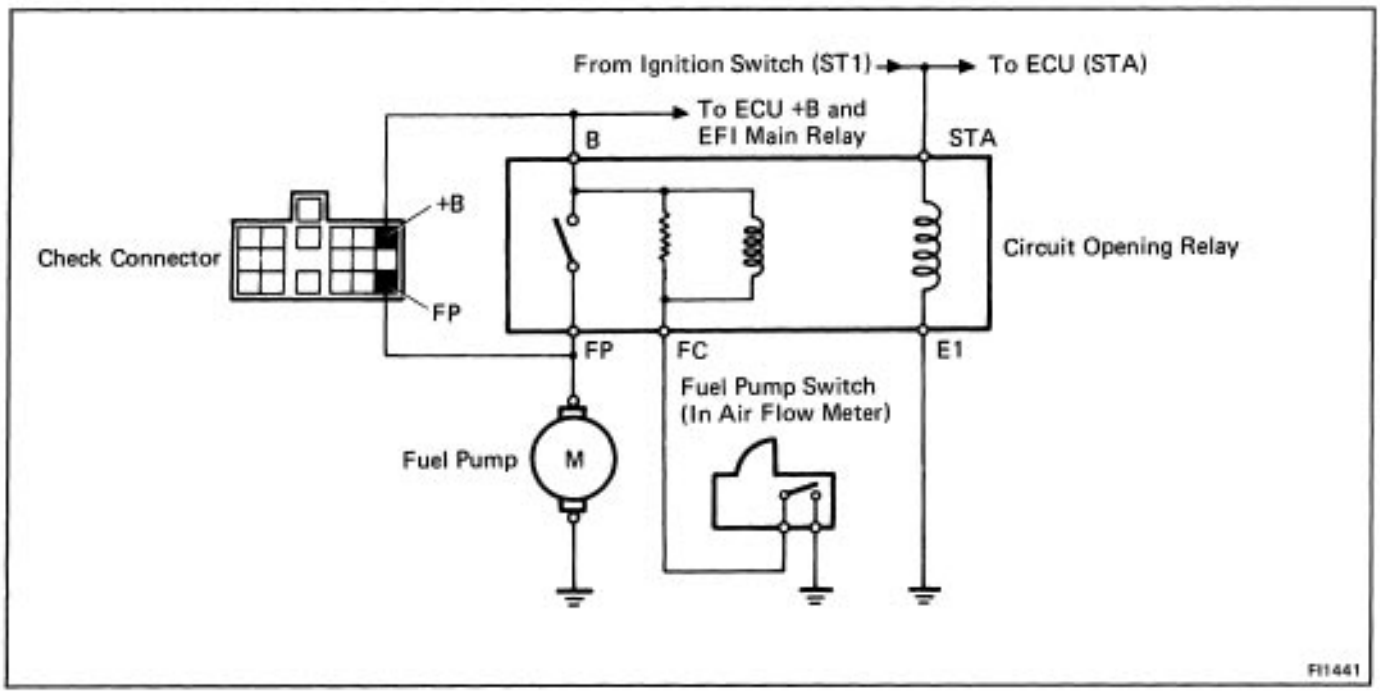

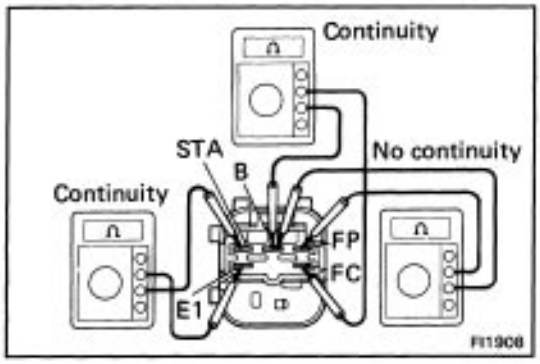

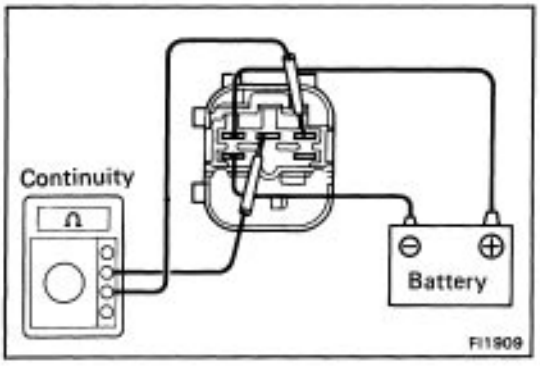

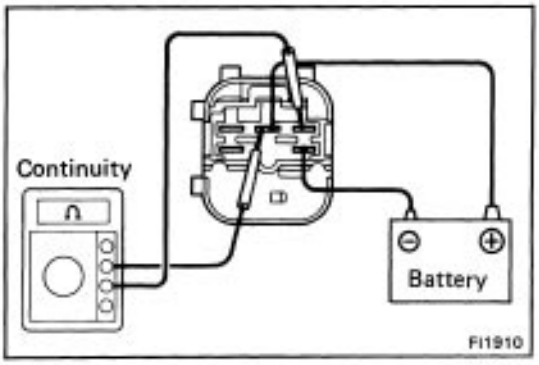

INSPECTION OF CIRCUIT OPENING RELAY

1. INSPECT RELAY CONTINUITY

(a) Using an ohmmeter, check that there is continuity between terminals STA and El.

(b) Check that there is continuity between terminals B and FC.

(c) Check that there is no continuity between terminals B and FP.

If continuity is not as specified, replace the relay.

2. INSPECT RELAY OPERATION

(a) Apply battery voltage across terminals STA and El.

(b) Using an ohmmeter, check that there is continuity between terminals B and FP.

(c) Apply battery voltage across terminal B and FC.

(d) Check that there is continuity between terminals B and FP.

If operation is not as specified, replace the relay.

Start Injector Time Switch

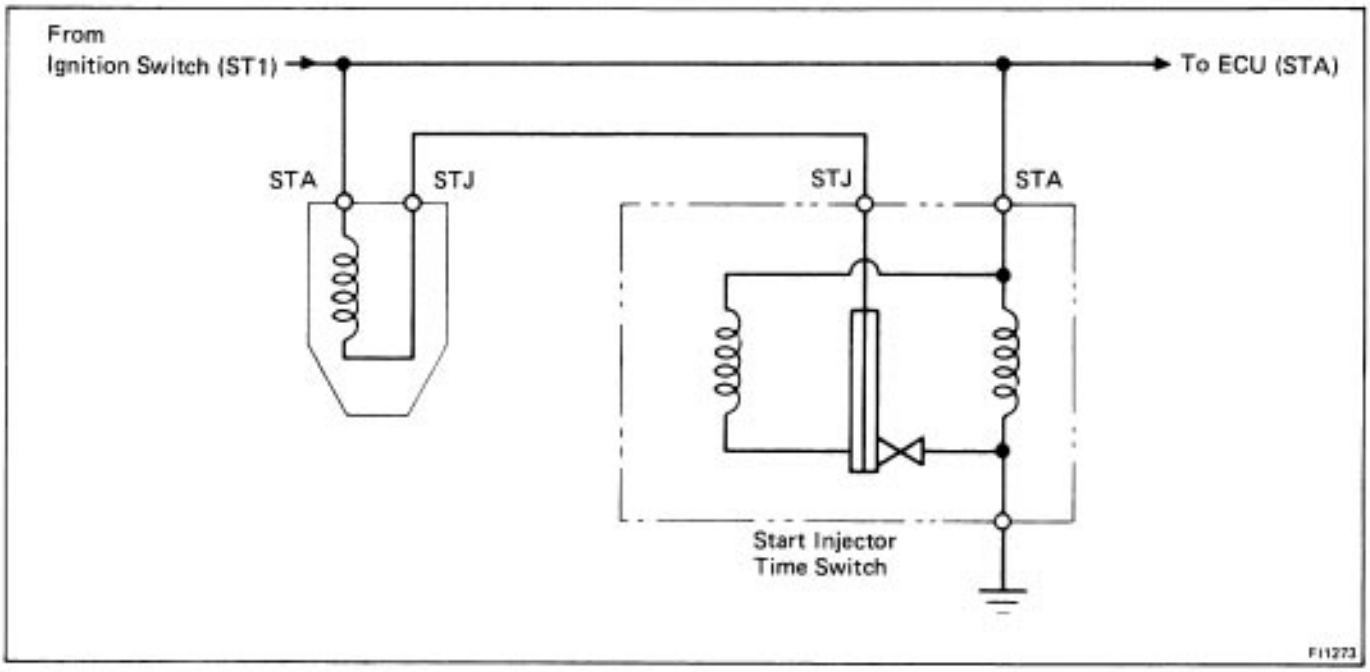

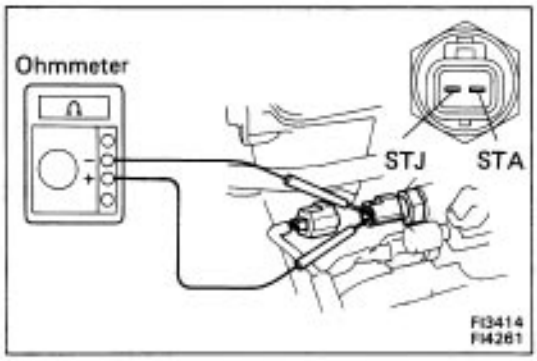

INSPECTION OF START INJECTOR TIME SWITCH

MEASURE RESISTANCE OF START INJECTOR TIME SWITCH

(a) Disconnect the connector.

(b) Using an ohmmeter, measure the resistance between each terminal.

Between terminals	Resistance (Ω)	Coolant temp.
STA – STJ	20 – 40	Below 30°C (86°F)
	40 – 60	Above 40°C (104°F)
STA – Ground	20 – 80	—

Water Temp. Sensor

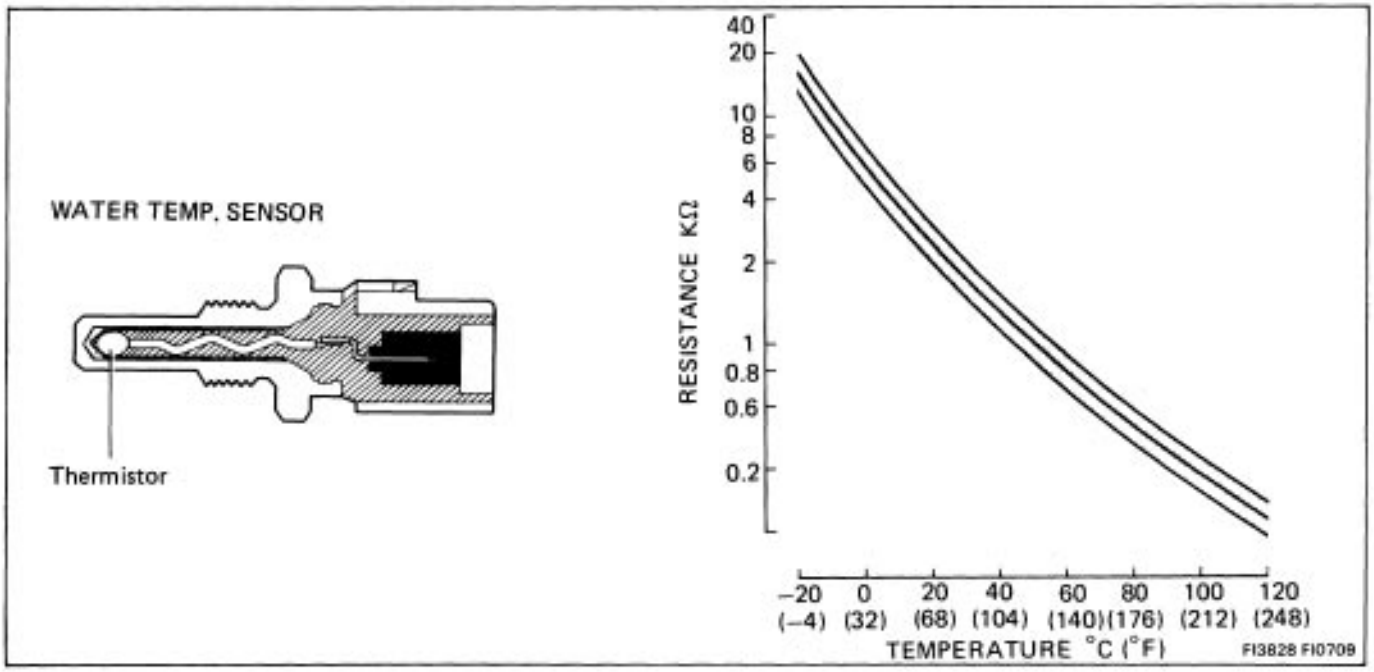

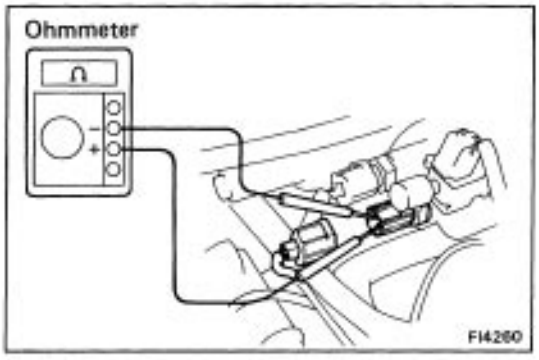

INSPECTION OF WATER TEMP. SENSOR

MEASURE RESISTANCE OF WATER TEMP. SENSOR

(a) Disconnect the connector.

(b) Using an ohmmeter, measure the resistance between both terminals. .

Resistance: Refer to the chart above.

If the resistance is not as specified, replace the sensor.

EGR Gas Temperature Sensor (California)

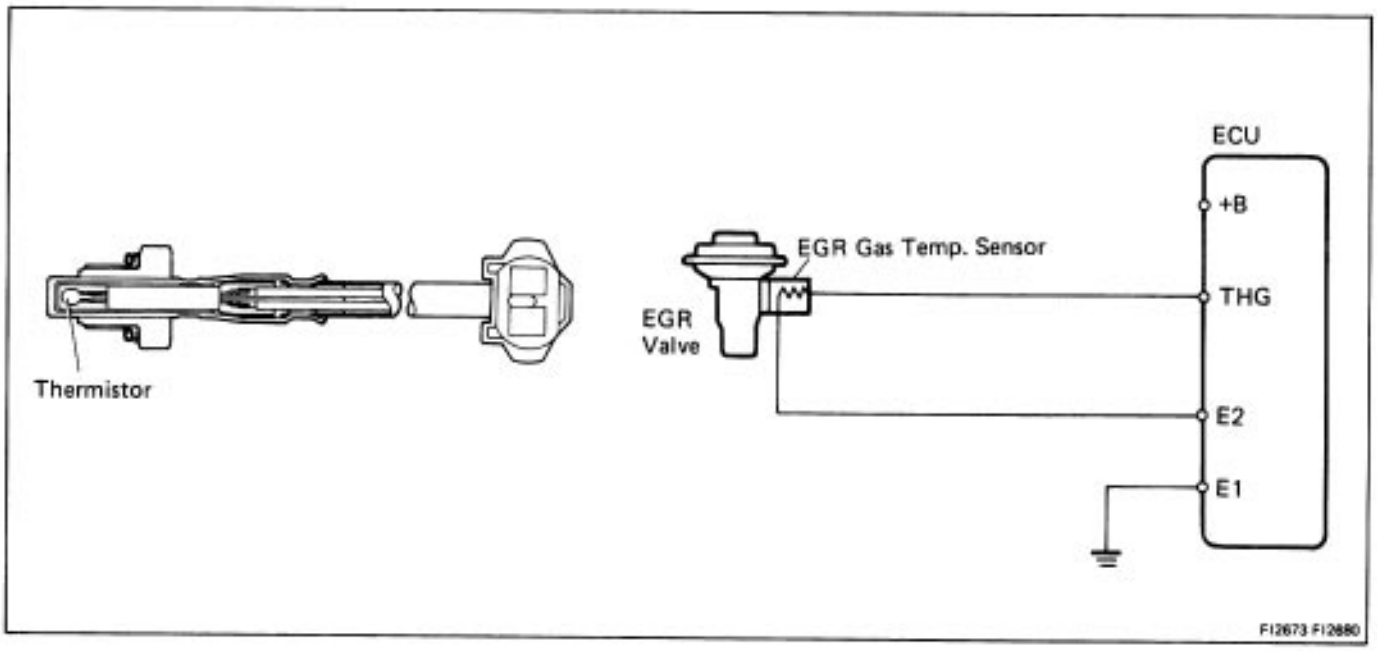

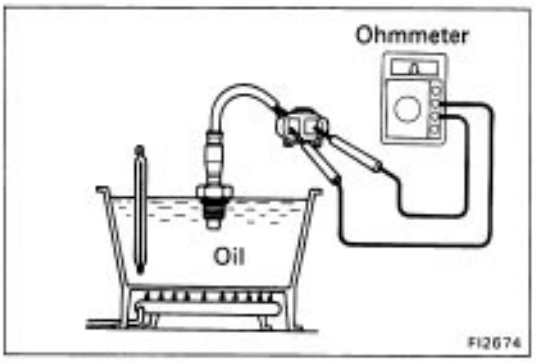

INSPECTION OF EGR GAS TEMPERATURE SENSOR

INSPECT EGR GAS TEMPERATURE SENSOR

Using an ohmmeter, measure the resistance between the terminals.

Resistance:

69.40 – 88.50 kΩ at 50 °C (112°F)
11.89 – 14.37 kΩ at 100°C (212°F)
2.79 – 3.59 kΩ at 150°C (302°F)

If the resistance is not as specified, replace the sensor.

Fuel Pressure Control System

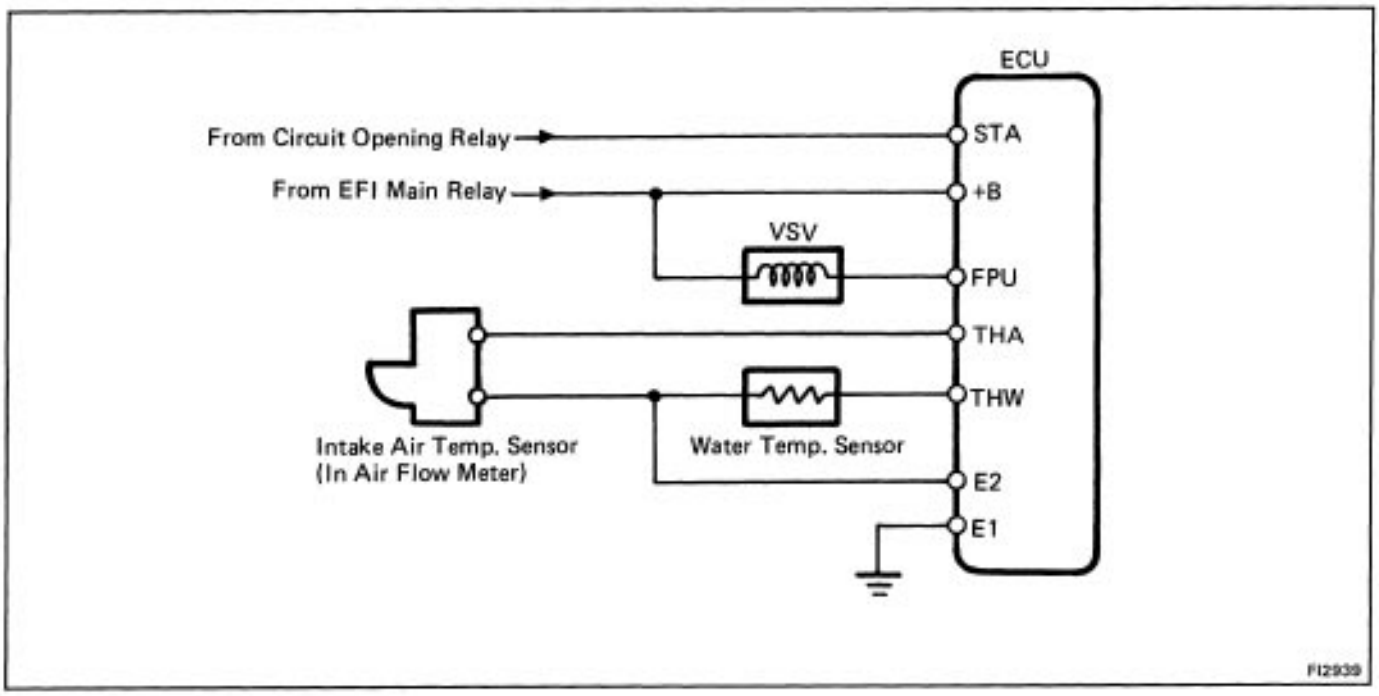

INSPECTION OF FUEL PRESSURE CONTROL SYSTEM

1. INSPECT WATER TEMPERATURE SENSOR

(See page FI–155)

2. INSPECT INTAKE AIR TEMPERATURE SENSOR

(See page FI–144)

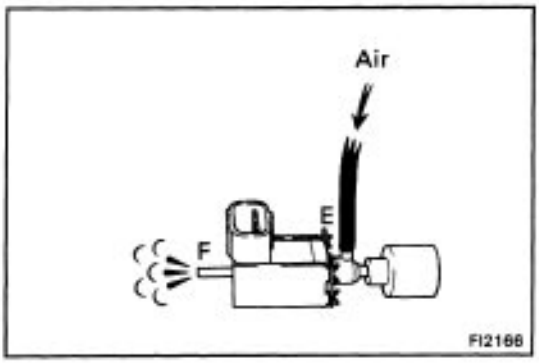

3. INSPECT VSV

HINT: The VSV located in the intake manifold right side.

(a) Check that air flows from pipe E to pipe F.

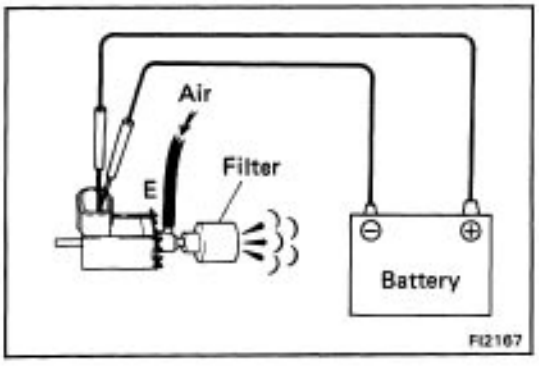

(b) Apply battery voltage across the terminals.

(c) Check that air flows from pipe E to the filter.

If operation is not as specified, replace the VSV.

Idle–up System

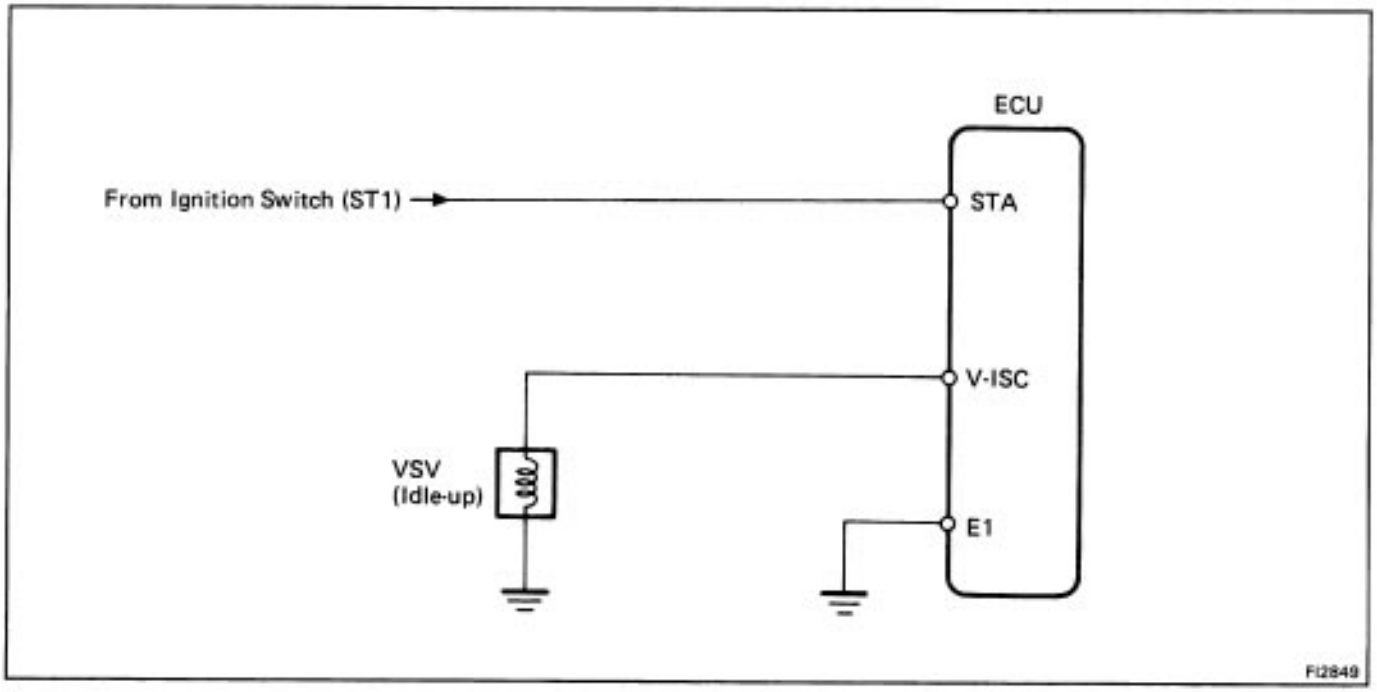

INSPECTION OF VSV (Idle–up)

1. MEASURE BATTERY VOLTAGE OF VSV

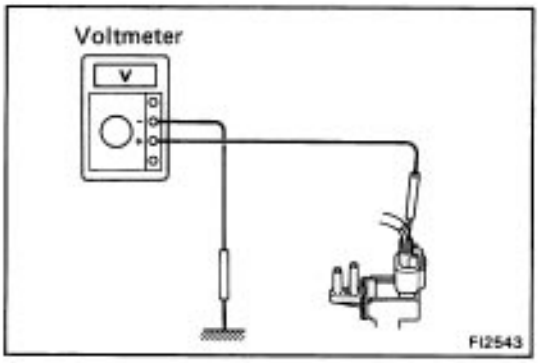

(a) All accessories switched ”OFF”.

(b) Using a voltmeter, check that the meter indicates battery voltage during cranking and for ten seconds after starting.

2. INSPECT VSV OPERATION

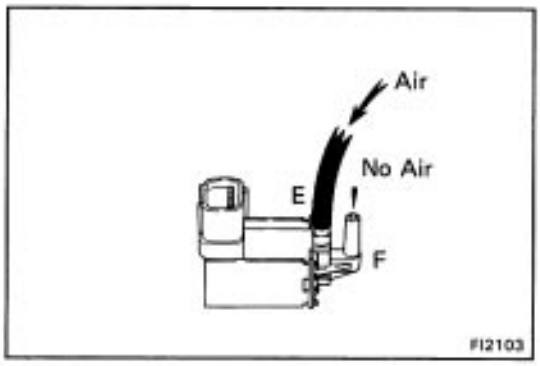

(a) Check that sir flows from pipe E to pipe F.

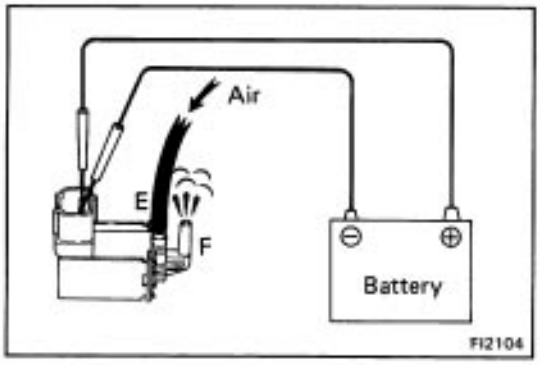

(b) Apply battery voltage across the terminals.

(c) Check that air flows from pipe E to pipe F.

If operation is not as specified, replace the VSV.

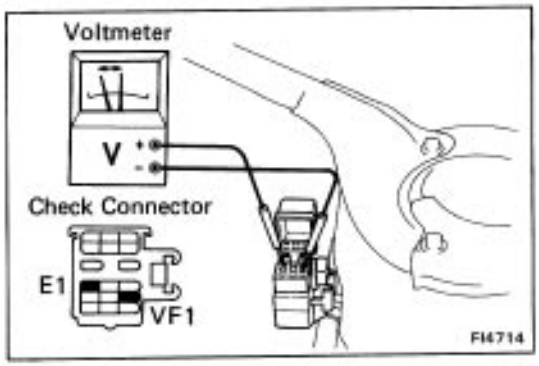

Main Oxygen Sensor

INSPECTION OF FEEDBACK VOLTAGE (VF1

1. Warm up the engine.
2. Connect the voltmeter to the check connector terminals VF1 and E1.

Warm up the Oxygen sensor with the engine at 2, 500 rpm for approx. 120 seconds.

Using SST, connect terminals TE 1 and E 1 of the check connector.
SST 09843–18020
And maintain engine speed at 2, 500 rpm.

Check that the number of times the voltmeter needle fluctuates in 10 seconds.

Less than 8 times

Warm up the Oxygen sensor with the engine at 2, 500 rpm for approx. 120 seconds. And maintain engine at 2, 500 rpm.

Check that the number of times the voltmeter needle fluctuates in 10 seconds.

8 times or more

Zero

Less than 8 times

Disconnect terminals TE1 and E1 of the check connector.
And maintain engine speed at 2, 500 rpm.

Measure voltage between terminals VF1 and E1.

More than 0 V

0 V

Read and record diagnostic codes

Normal code and code 21

Malfunction code(s) (ex. code 21)

Repair the relevant diagnostic code.

8 times or more

Normal

Zero

After replacing the oxygen sensor.

Replace the ECU

① ② ③

CONTINUED ON PAGE FI–160

CONTINUED FROM PAGE FI–159

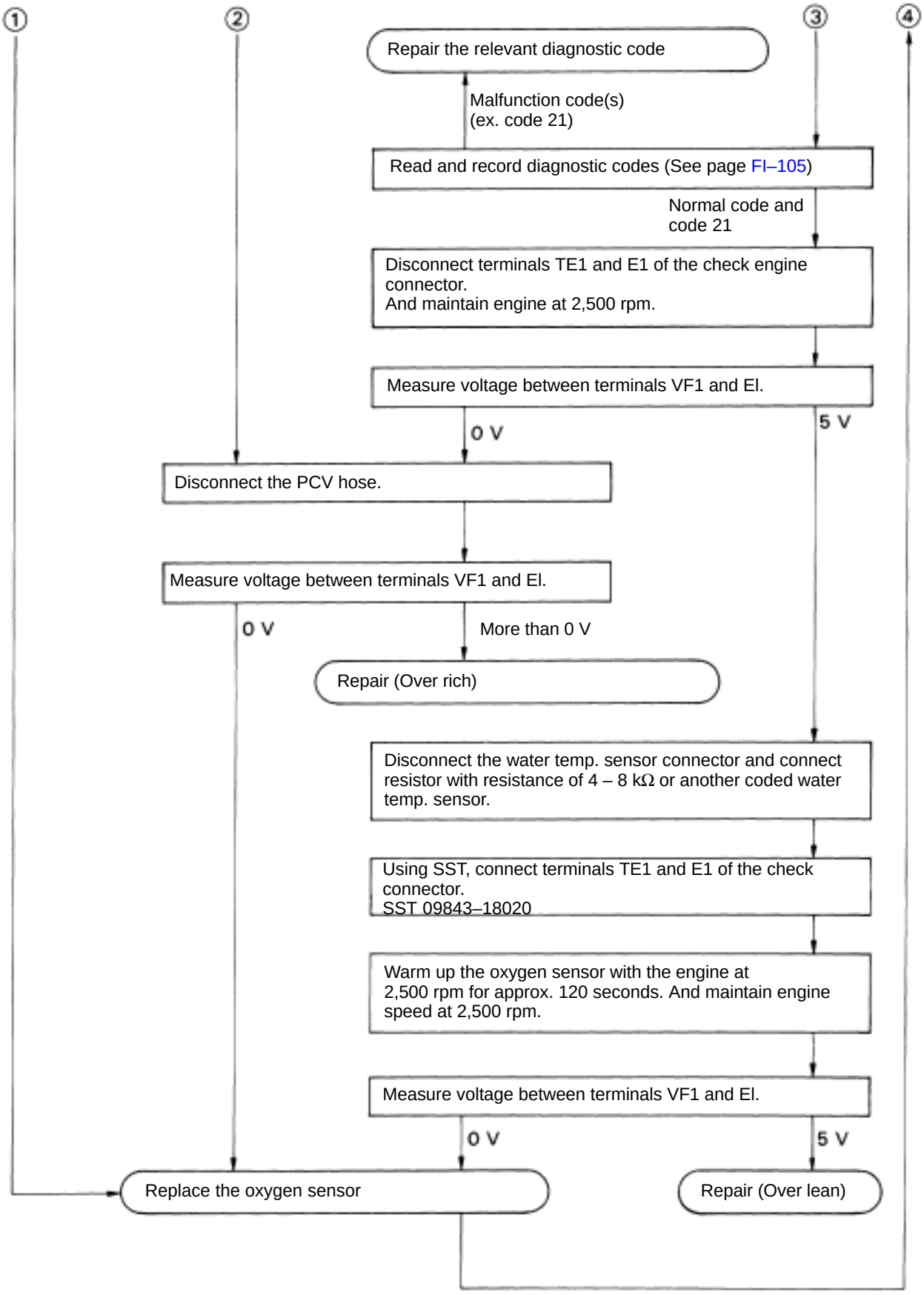

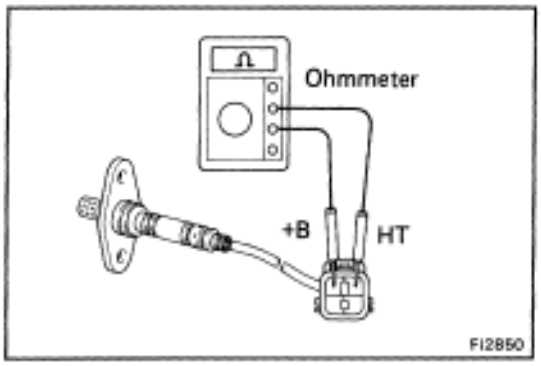

3. INSPECT HEATER RESISTANCE OF OXYGEN SENSOR

Using an ohmmeter, measure the resistance between the terminals +B and HT.

Resistance:

Federal and Canada

4.95 – 6.05 Ω at 20˚C (68˚F)

California

5.1 – 6.3 Ω at 20˚C (68˚F)

If the resistance is not as specified, replace the sensor.

Sub–Oxygen Sensor (California)

INSPECTION OF SUB–OXYGEN SENSOR

INSPECT SUB–OXYGEN SENSOR

HINT: Inspect only when code No.27 is displayed.

(a) Diagnostic code cancellation.
(See page FI–104)

(b) Warm up the engine until it reaches normal operating temperature.

(e) Drive for 3 minutes or more between 65 km/h (40 mph) and 100 km/h (62 mph) in 4th or 5th gear.

(d) Following the conditions in step (C), press fully on the accelerator pedal and keep engine speed at 3,000 rpm or more for at least 10 seconds.

HINT: Do not exceed 100 km/h (62 mph), or diagnostic code will not operate.

(e) Stop the vehicle and turn the ignition switch to OFF.

(f) Carry out steps (b), (c) and (d) again to test acceleration. If code No. 27 reappears again, check the sub–oxygen sensor circuit. If the circuit is normal, replace the sub–oxygen sensor.

Engine Electronic Controlled Unit (Engine ECU)

INSPECTION OF ENGINE ECU

HINT: The EFI circuit can be checked by measuring the resistance and voltage at the wiring connectors of the ECU.

1. INSPECT VOLTAGE OF ECU

Check the voltage between each terminal of the wiring connectors.

- Turn the ignition switch ON.
- Measure the voltage at each terminal.

HINT:

- Perform all voltage measurements with the connectors connected.
- Verify that the battery voltage is 11 V or more when the ignition switch is ON.

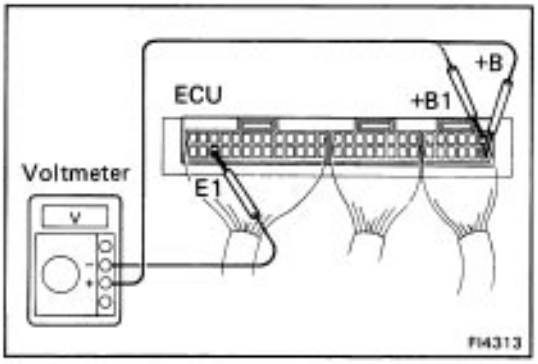

Connectors of ECU

Symbol	Terminal	Symbol	Terminal	Symbol	Terminal
E01	Engine ground (Power)	NE	Engine revolution sensor	THA	Intake air temp. sensor
E02	Engine ground (Power)	G⊖	Engine revolution sensor	VCC	Throttle position sensor
No.10	Injector	IGF	Igniter	VS	Air flow meter
No.20	Injector	EGR	VSV (EGR)	VTA	Throttle position sensor
*2HT	Oxygen sensor heater	STA	Starter switch	VC	Air flow meter
E1	Engine ground	–	–	E2	Sensor ground
–	–	FPU	VSV (Fuel pressure control)	ACT	A/C amplifier
–	–	*1HT	Oxygen sensor heater	–	–
V-ISC	VSV (Idle–up)	VF	Check connector	STP	Stop light switch
IGT	Igniter	E21	Sensor ground	SPD	Speedometer sensor
–	–	*1OX⊕	Oxygen sensor	–	–
–	–	T	Check connector	A/C	A/C magnet clutch
–	–	OX1	Main oxygen sensor	–	–
–	–	KNK	Knock sensor	–	–
–	–	*2OX2	Sub–oxygen sensor	BATT	Battery
–	–	*2THG	EGR gas temp. sensor	W	Warning light
G⊕	Engine revolution sensor	THW	Water temperature sensor	+B1	EFI main relay
–	–	IDL	Throttle position sensor	+B	EFI main relay

ECU Terminals

*1 : Federal and Canada, *2 : California

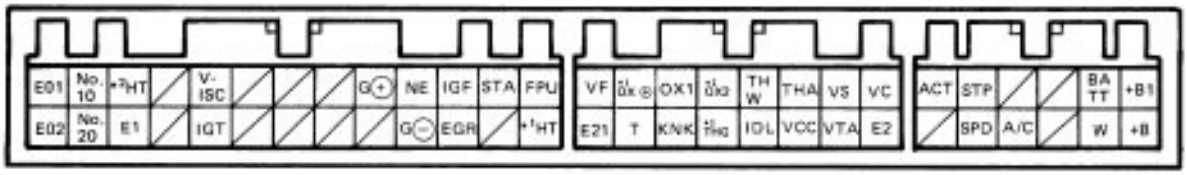

Voltage at ECU Wiring Connectors

Terminals	STD Voltage	Condition	
BATT – E1	10 – 14	–	
+B – E1		Ignition switch ON	
+B1 – E1			
IDL – E2	10 – 14	Ignition switch ON	Throttle valve open
VC – E2	6 – 10	Ignition switch ON	–
VTA – E2	0.1 – 1.0		Throttle valve fully closed
	4 – 5		Throttle valve fully open
VCC – E2	4 – 6	Ignition switch ON	
VS – E2	2 – 5.5	Ignition switch ON	Measuring plate fully closed
	6 – 9		Measuring plate fully open
	2 – 8	Idling	
THA – E2	1 – 3	Ignition switch ON	Intake air temperature 20 ˚C (68˚ F)
THW – E2	0.1 – 1.0	Ignition switch ON	Coolant temperature 80˚C (176˚F)
STA – E1	6 – 14	Cranking	
No.10 – E01 No.20 – E02	10 – 14	Ignition switch ON	
IGT – E1	0.7 – 1.0	Idling	
T – E1	10 – 14	Ignition switch ON	Check connector TE1 – E1 not connect
	0.5 or less		Check connector TE1 – E1 connect
A/C – E1	5 – 14	Ignition switch ON	A/C switch ON
	0.5 or less		A/C switch OFF
W – E1	0.5 or less	Ignition switch ON	
	10 – 14	Engine start	

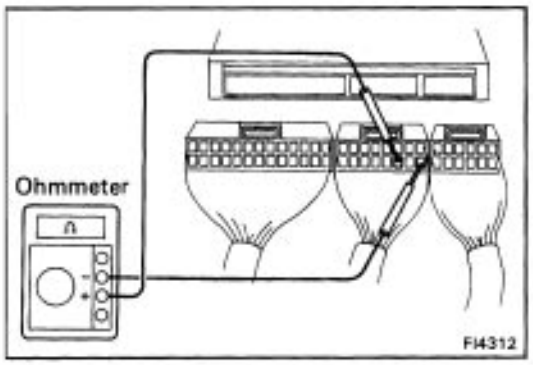

2. INSPECT RESISTANCE OF ECU

NOTICE:

- Do not touch the ECU terminals.
- The tester probe should be inserted into the wiring connector from the wiring side.

Check the resistance between each terminal of the wiring connectors.

- Disconnect the connectors from the ECU.
- Measure the resistance at each terminal.

Resistances at ECU Wiring Connectors

Terminals	Condition	Resistance
IDL – E2	Throttle valve open	Infinity
	Throttle valve fully closed	Less than 2.3 kΩ
VTA – E2	Throttle valve fully open	3.3 – 10 kΩ
	Throttle valve fully closed	0.2 – 0.8 kΩ
VC – E2	–	100 – 300 Ω
VS – E2	Measuring plate fully closed	20 – 400 Ω
	Measuring plate fully open	20 – 3,000 Ω
VCC – E2	–	3 – 7 kΩ
THA – E2	Intake air temperature 20°C (68°F)	2 – 3 kΩ
THW – E2	Coolant temperature 80°C (176°F)	0.2 – 0.4 kΩ
G ⊕ – G ⊖	–	140 – 180 Ω

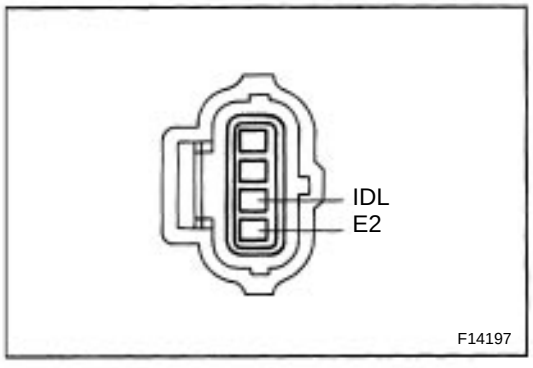

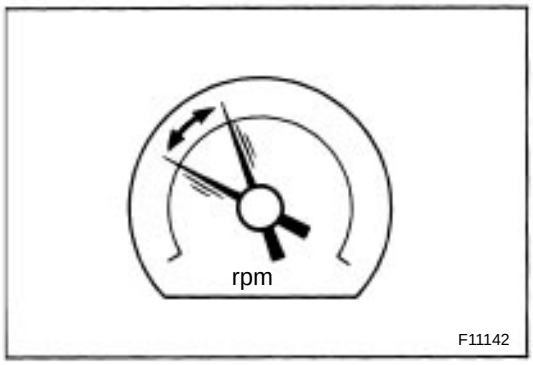

Fuel Cut RPM

INSPECTION OF FUEL CUT RPM

(a) Start and warm up the engine.

(b) Disconnect the throttle position sensor connector from the throttle position sensor.

(c) Connect terminals IDL and E2 on the wire connector side.

(d) Gradually raise the engine rpm and check that there is fluctuation between the fuel cut and fuel return points.
HINT: The vehicle should be stopped.

Fuel cut rpm: **1,600 rpm (A/C OFF)**
1,900 rpm (A/C ON)

Fuel return rpm: **1,200 rpm (A/C OFF)**
1,500 rpm (A/C ON)

IGNITION SYSTEM

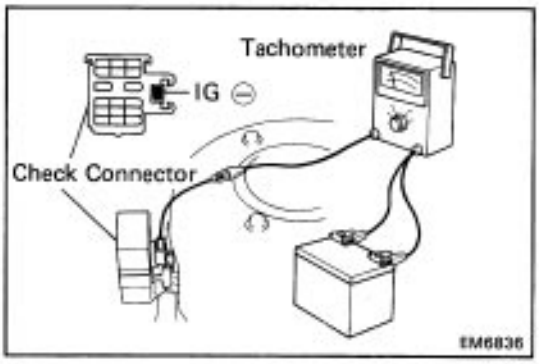

PRECAUTIONS

1. Do not leave the ignition switch on for more than 10 minutes if the engine will not start.
2. With a tachometer is connected to the system, connect the test probe of the tachometer to terminal IG (B of the check connector.
3. As some tachometers are not compatible with this ignition system, we recommend that you confirm the compatibility of your unit before using.
4. NEVER allow the tachometer terminal to touch ground as this could damage the igniter and/or ignition coil.
5. Do not disconnect the battery when the engine is running.
6. Check that the igniter is properly grounded to the body.

TROUBLESHOOTING

Problem	Possible cause	Remedy	Page
Engine will not start/ hard to start (cranks ok)	Incorrect ignition timing	Reset timing	IG–16, 19
	Ignition coil faulty	Inspect coil	IG–6, 11
	Igniter faulty	Inspect igniter	IG–4, 8
	IIA or distributor faulty	Inspect IIA or distributor	IG–6, 11
	High–tension cord faulty	Inspect high–tension cord	IG–5, 9
	Spark plug faulty	Inspect plugs	IG–5, 9
	Ignition wiring disconnected or broken	Inspect wiring	
Rough idle or stalls	Spark plugs faulty	Inspect plugs inspect wiring	IG–5, 9
	Ignition wiring faulty	Reset timing	
	Incorrect ignition timing	Inspect coil	IG–16, 19
	Ignition coil faulty	Inspect igniter	IG–6, 11
	Igniter faulty	Inspect IIA or distributor	IG–4, 8
	IIA or distributor faulty	Inspect high–tension cord	IG–6, 11
	High–tension cord faulty		IG–5, 9
Engine hesitates/ poor acceleration	Spark plugs faulty ignition	Inspect plugs	IG–5, 9
	wiring faulty	Inspect wiring	
	Incorrect ignition timing	Reset timing	IG–16, 19
Engine dieseling (runs after ignition switch is turned off)	Incorrect ignition timing	Reset timing	IG–16, 19
Muffler explosion (after fire) all the time	Incorrect ignition timing	Reset timing	IG–16, 19
Engine backfires	Incorrect ignition timing	Reset timing	IG–16, 19
Poor fuel economy	Spark plugs faulty	Inspect plugs	IG–5, 9
	Incorrect ignition timing	Reset timing	IG–16, 19
Engine overheats	Incorrect ignition timing	Reset timing	IG–16, 19

ELECTRONIC SPARK ADVANCE (ESA)

The ECU is programmed with data for optimum ignition timing under any and all operating conditions. Using data provided by sensors which monitor various engine functions (rpm, intake air volume, engine temperature, etc.)
the microcomputer (ECU) triggers the spark at precisely the right instant.

ESA SYSTEM CIRCUIT

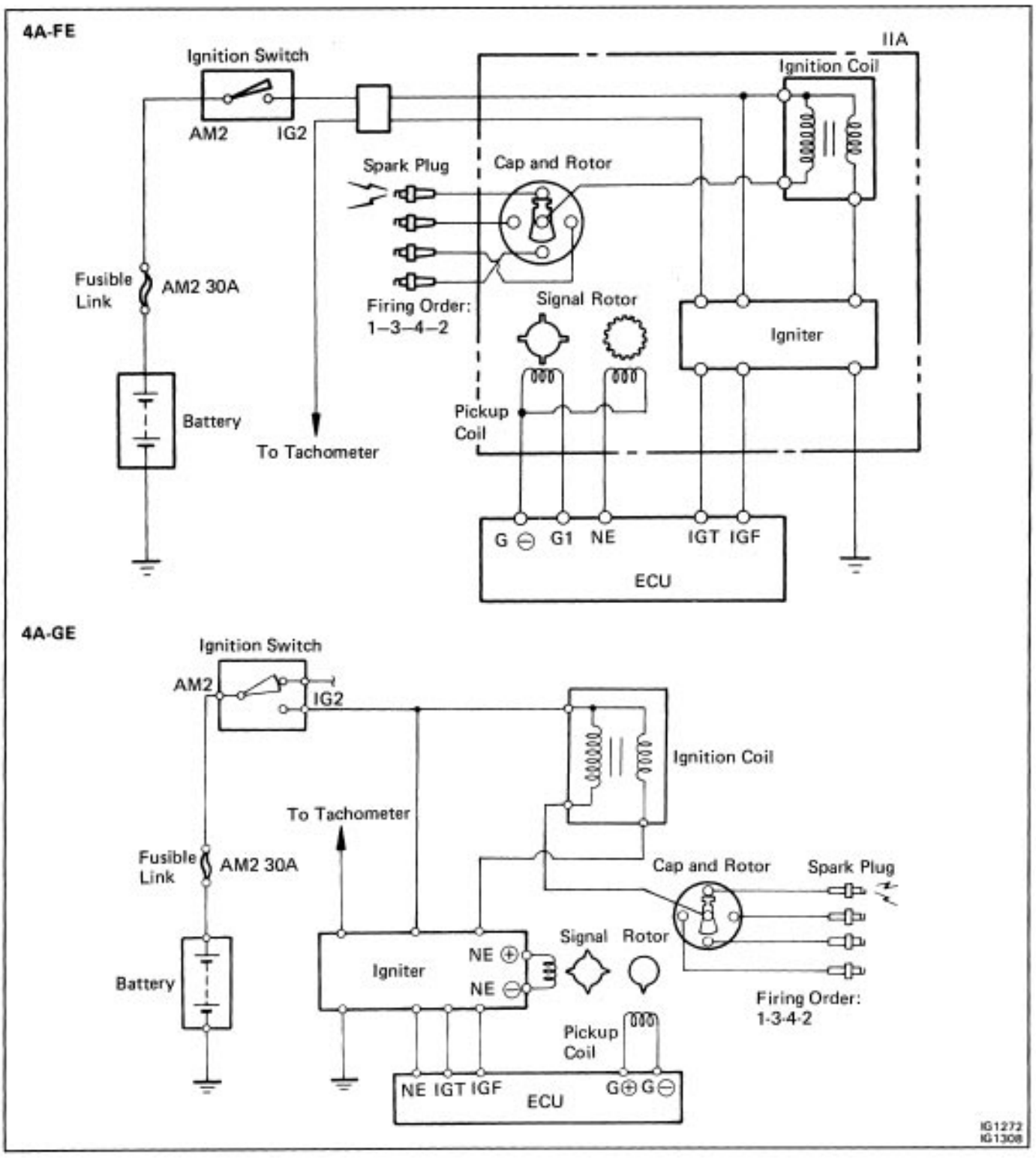

ON–VEHICLE INSPECTION (4A–FE)

SPARK TEST

CHECK THAT SPARK OCCURS

(a) Disconnect high–tension cords from spark plugs.
(b) Remove the spark plugs. (See page IG–5)
(c) Install the spark plugs to each high–tension cords.
(d) Ground the spark plug.
(e) Check if spark occurs while engine is being cranked.

HINT: To prevent gasoline from being injected from injectors during this test, crank the engine for no more than 1–2 seconds at a time.

If the spark does not occur, perform the test as follows.

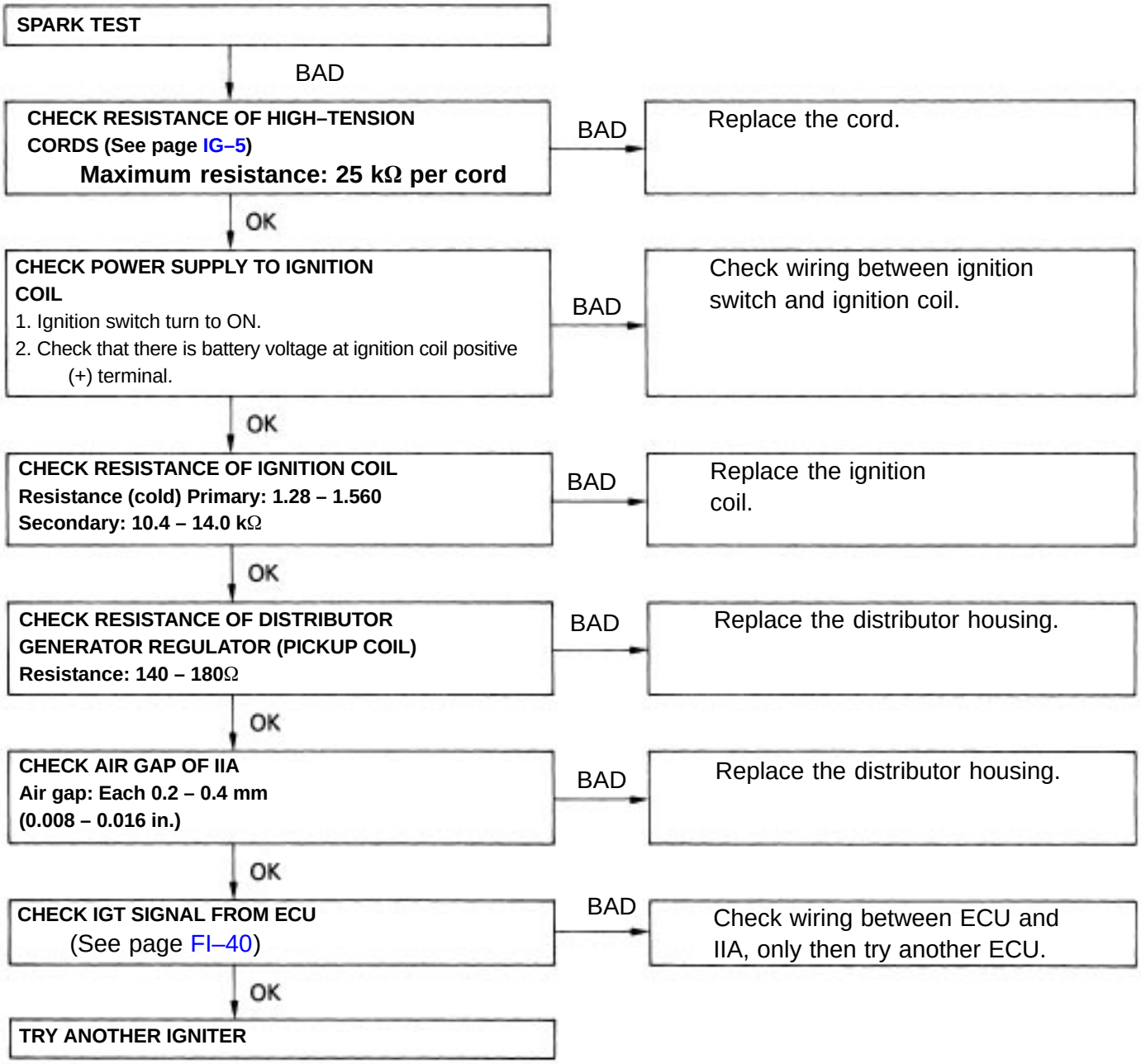

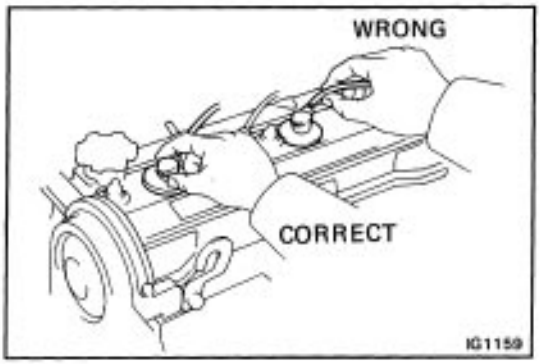

INSPECTION OF HIGH–TENSION CORDS

1. CAREFULLY DISCONNECT HIGH–TENSION CORDS BY THEIR RUBBER BOOTS FROM SPARK PLUGS

NOTICE: Pulling on or bending the cords may damage the conductor inside.

2. REMOVE IIA CAP WITHOUT DISCONNECTING HIGH–TENSION CORDS

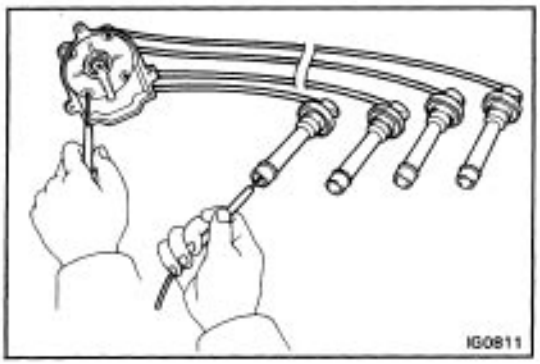

3. INSPECT HIGH–TENSION CORD RESISTANCE

Using an ohmmeter, measure the resistance without disconnecting the IIA cap.

Maximum resistance: 25 kΩ per cord

If the resistance is greater than maximum, check the terminals. If necessary, replace the high–tension cord and/or IIA cap.

4. REINSTALL IIA CAP

5. RECONNECT HIGH–TENSION CORDS TO SPARK PLUGS

INSPECTION OF SPARK PLUGS

1. DISCONNECT HIGH–TENSION CORDS FROM SPARK PLUGS

2. REMOVE SPARK PLUGS

Using a 16 mm plug wrench, remove the spark plug.

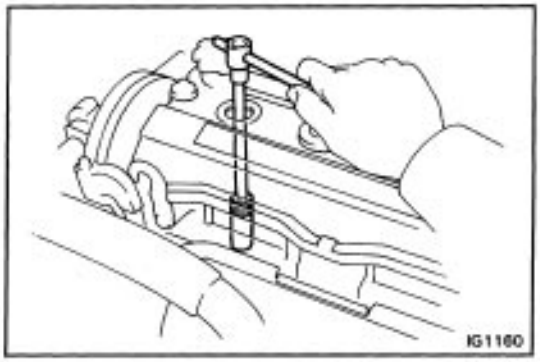

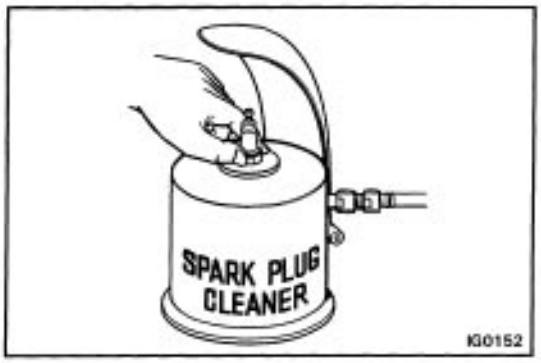

3. CLEAN SPARK PLUGS

Using spark plug cleaner or wire brush, clean the spark plug.

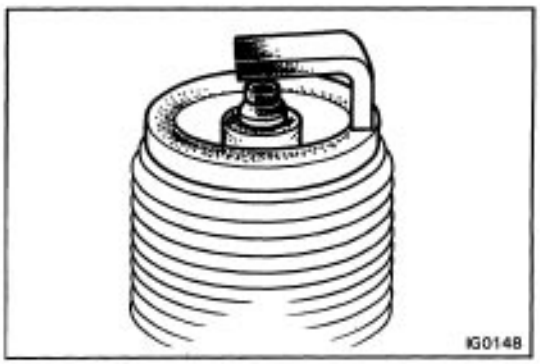

4. VISUALLY INSPECT SPARK PLUGS

Check the spark plug for electrode wear, thread damage and insulator damage.

If abnormal, replace the spark plug.

Recommended spark plug: ND Q16R–U

NGK BCPR5EY

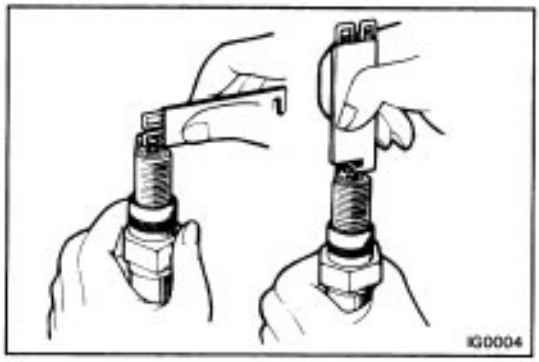

5. ADJUST ELECTRODE CAP

Carefully bent the outer electrode to obtain the correct electrode gap.

Correct electrode gap: 0.8 mm (0.031 in.)

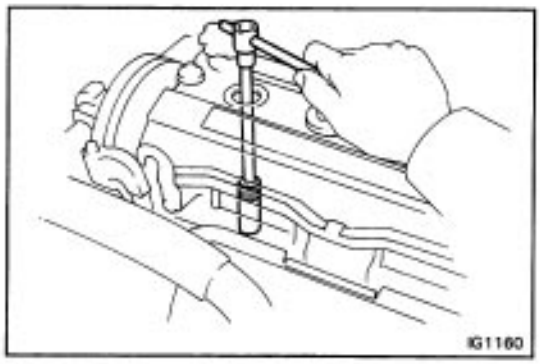

6. INSTALL SPARK PLUGS

Using a 16 mm plug wrench, install the spark plug.

Torque: 180 kg–cm (13 ft–lb, 18 N–m)

7. RECONNECT HIGH–TENSION CORDS TO SPARK PLUGS

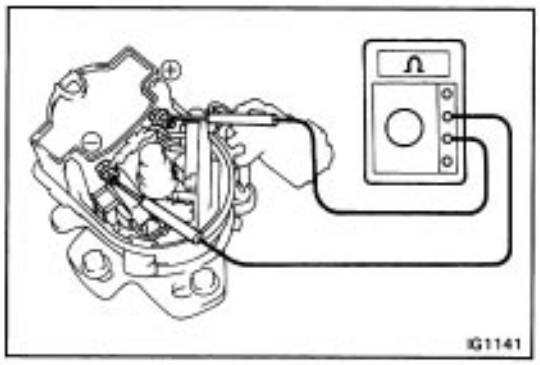

INSPECTION OF IGNITION COIL

1. INSPECT PRIMARY COIL RESISTANCE

Using an ohmmeter, measure the resistance between positive (+) and negative (–) terminals.

Primary coil resistance (Cold): 1.25 – 1.56Ω

If the resistance is not as specified, replace the ignition coil.

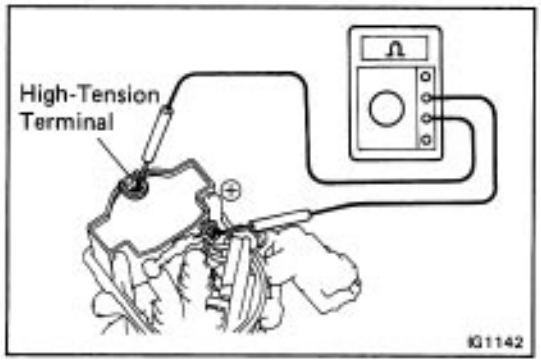

2. INSPECT SECONDARY COIL RESISTANCE

Using an ohmmeter, measure the resistance between the positive (+) and high–tension terminals.

Secondary coil resistance (Cold): 10.4 – 14.0 kΩ

If the resistance is not as specified, replace the ignition coil.

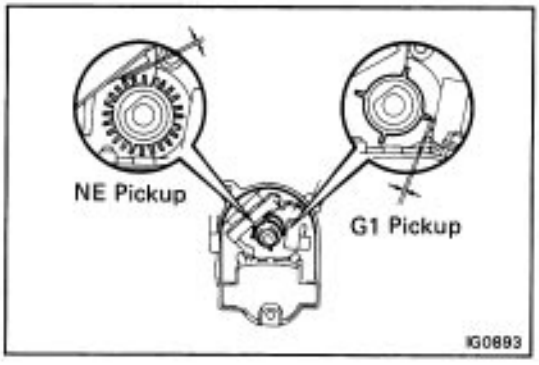

INSPECTION OF IIA

1. INSPECT AIR GAP

Using a feeler gauge, measure the gap between the signal rotor and pickup coil projection.

Air gap: 0.2 – 0.4 mm (0.008 – 0.076 in.)

If the air gap is not as specified, replace the distributor housing.

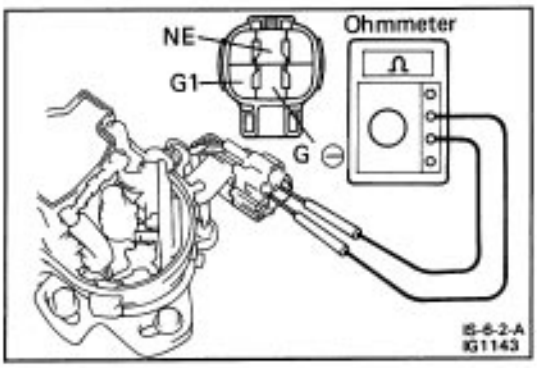

2. INSPECT SIGNAL GENERATOR (PICKUP COIL) RESISTANCE

Using an ohmmeter, measure the resistance between the terminals (G1 and Ge, NE and Ge).

Pickup coil resistance (Cold): 140 – 180Ω

If the resistance is not as specified, replace the distributor housing.

INSPECTION OF IGNITER

(See procedure Spark Test on page IG–4)

ON–VEHICLE INSPECTION (4A–GE)

SPARK TEST

CHECK THAT SPARK OCCURS

(a) Disconnect the high–tension cord from the distributor.
(b) Hold the end about 12.7 mm (0.50 in.) from body of car.
(c) See if spark occurs while engine is being cranked.
HINT: To prevent gasoline from being injected from injectors during this test, crank the engine for no more than
1 – 2 seconds at time.
If the spark does not occurs, perform the test as follows:

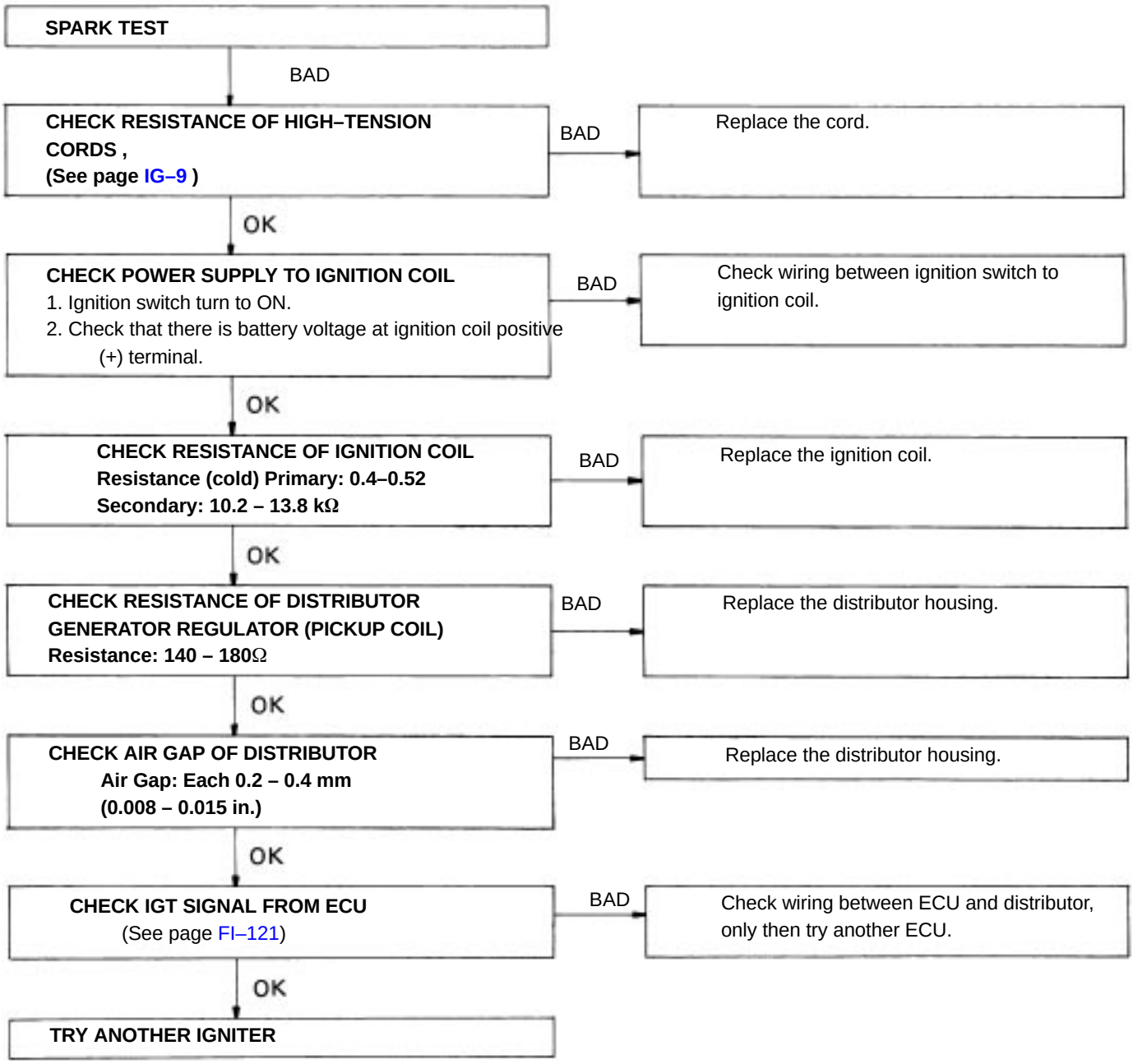

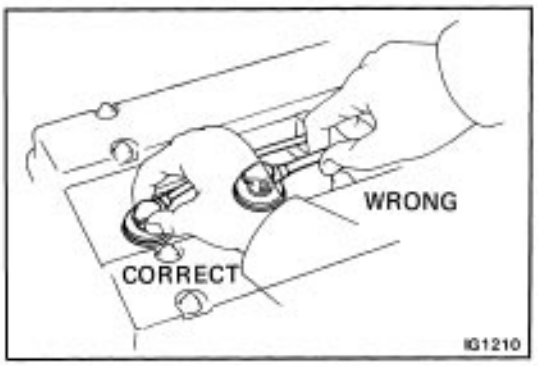

INSPECTION OF HIGH–TENSION CORD

1. REMOVE PLUG CORD COVER

2. CAREFULLY REMOVE HIGH–TENSION CORDS BY THEIR RUBBER BOOTS

NOTICE: DO NOT pull on the cords or bend the wires. The conductor inside may be damaged.

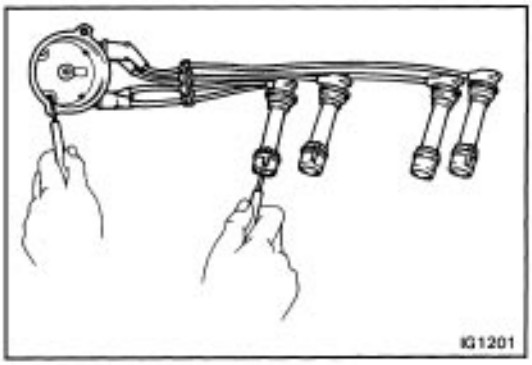

3. INSPECT RESISTANCE OF HIGH–TENSION CORD AND DISTRIBUTOR CAP

Using an ohmmeter, check that the resistance does not exceed the maximum.

Maximum resistance: 25 kΩcord

If more than maximum, check the terminals, and replace the high–tension cord and/or distributor cap as required.

INSPECTION OF SPARK PLUG

(Platinum Tipped Spark Plug)

NOTICE:

- **Never use a wire brush for cleaning.**
- **Never attempt to adjust gap on used plug.**
- **Spark plugs should be replaced every 60,000 miles (100, 000 km).**

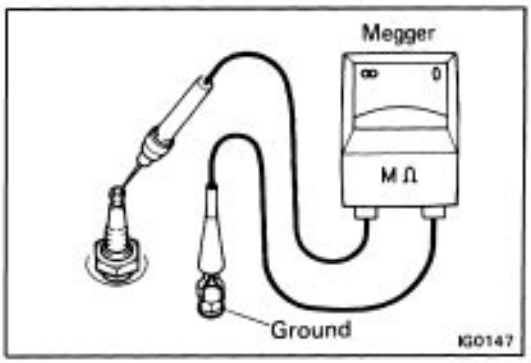

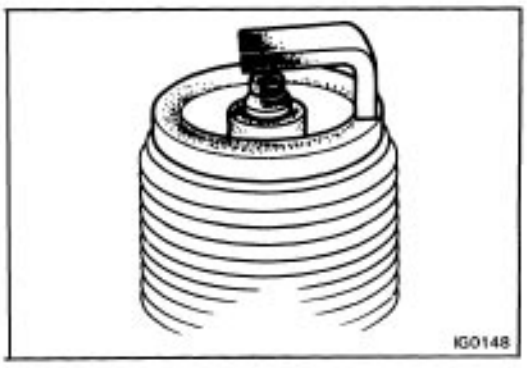

1. REMOVE PLUG CORD COVER

2. DISCONNECT HIGH–TENSION CORDS FROM SPARK PLUGS

3. INSPECT ELECTRODE

(a) If using a megger (insulation resistance meter):

Measure the insulation resistance.

Correct insulation resistance: More than 10 MΩ

If less than 10 MΩ, proceed to step 4.

(b) If not using a megger:

Quickly race the engine to 4,000 rpm five times.

Visually inspect the spark plugs.

If the electrode is dry ... Okay

If the electrode is wet ... Proceed to step 4

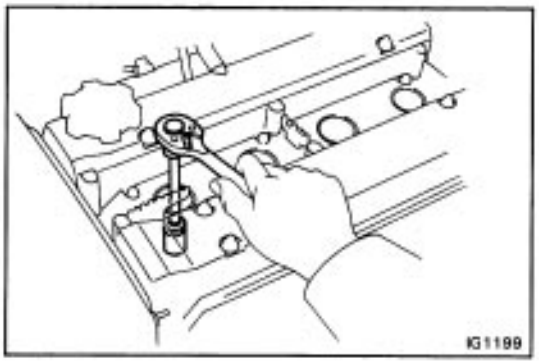

4. REMOVE SPARK PLUGS

Using a plug wrench (16 mm), remove the spark plugs

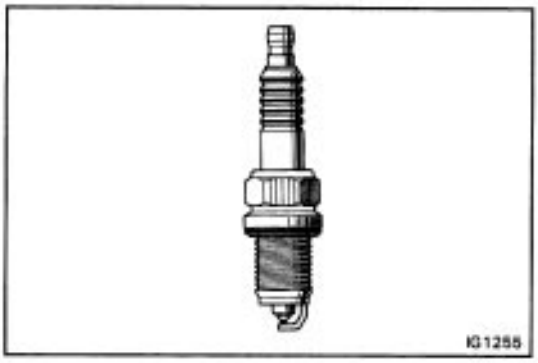

5. VISUALLY INSPECT SPARK PLUGS

Inspect the spark plugs for thread or insulator damage.
If defective, replace the plug.
Recommended spark plugs:

ND PK20R8
NGK BKR6EP8

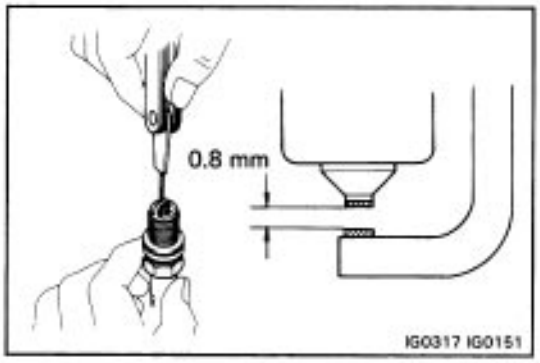

6. INSPECT ELECTRODE GAP

Maximum limit: 1.0 mm (0.039 in.)
If not, replace the plug.
Correct electrode gap of new plug:
0.8 mm (0.031 in.)
If adjusting the gap of a new plug, bend only the base o the ground electrode, do not touch the tip.



7. CLEAN SPARK PLUGS

If the electrode has traces of wet carbon, allow it to dry and then clean with a spark plug cleaner.
Air pressure: Below 6 kg/cm2 (85 psi, 588 kPa)
Duration: 20 seconds or less
HINT: If there are traces of oil, remove it with gasoline before using the spark plug cleaner.

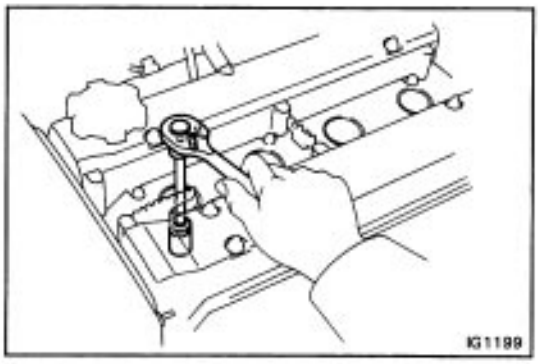

8. INSTALL SPARK PLUGS

Using a plug wrench (16 mm), install and torque the spark plugs.
Torque: 180 kg–cm (13 ft–lb, 18 N–m)

9. RECONNECT HIGH–TENSION CORDS TO SPARK PLUGS

10. INSTALL PLUG CORD COVER

INSPECTION OF IGNITION COIL

1. DISCONNECT HIGH–TENSION CORD AND CONNECTOR FROM IGNITION COIL

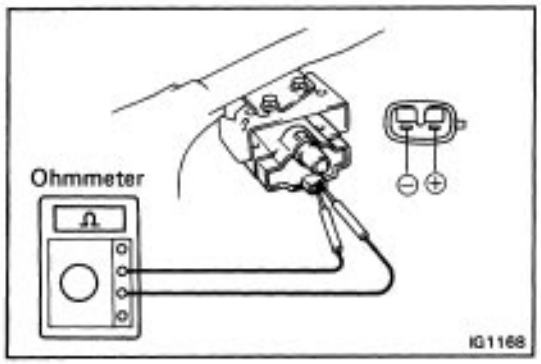

2: INSPECT PRIMARY COIL RESISTANCE

Using an ohmmeter, measure the resistance between the positive (+) and negative (–) terminals.

Primary coil resistance (cold): 0.4 – 0.5Ω

If the resistance is not as specified, replace the ignition coil.

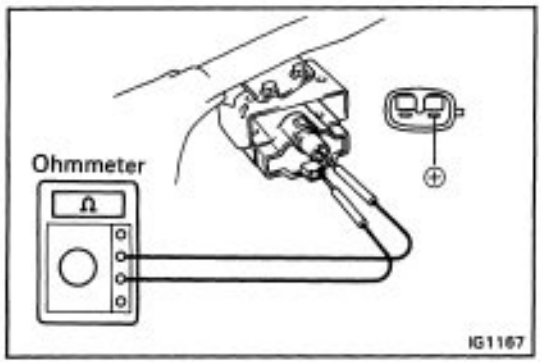

3. INSPECT SECONDARY COIL RESISTANCE

Using an ohmmeter, measure the resistance between the positive (+) and high–tension terminals.

Secondary coil resistance (cold): 10.2 – 13.8 kΩ

If the resistance is not as specified, replace the ignition coil.

INSPECTION OF DISTRIBUTOR

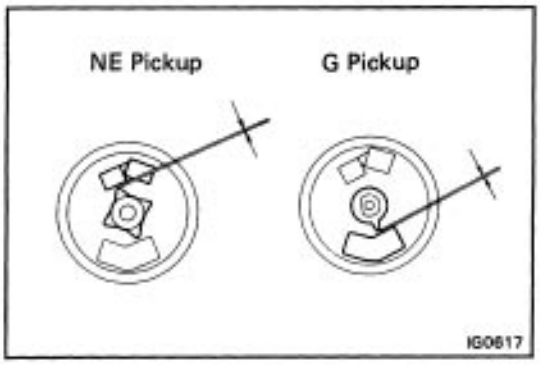

1. INSPECT AIR GAPS

Using a feeler gauge, measure the gap between the signal rotor and pickup coil projection.

Air gap: 0.2 – 0.4 mm (0.008 – 0.016 in.)

If the gap is not within specification, replace the distributor housing.

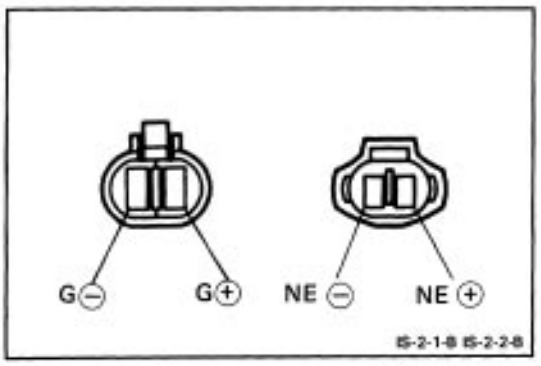

2. CHECK SIGNAL GENERATOR (PICKUP COIL) RESISTANCE

Using an ohmmeter, measure the resistance of the two signal generators.

"G" pickup coil resistance (cold):

G (+) – G (–) 140– 180Ω

"NE" pickup coil resistance (cold):

NE (+) – NE (–) 140 – 180 Ω

If the resistance is not as specified, replace the distributor housing.

INTEGRATED IGNITION ASSEMBLY (IIA) (4A–FE)

COMPONENTS

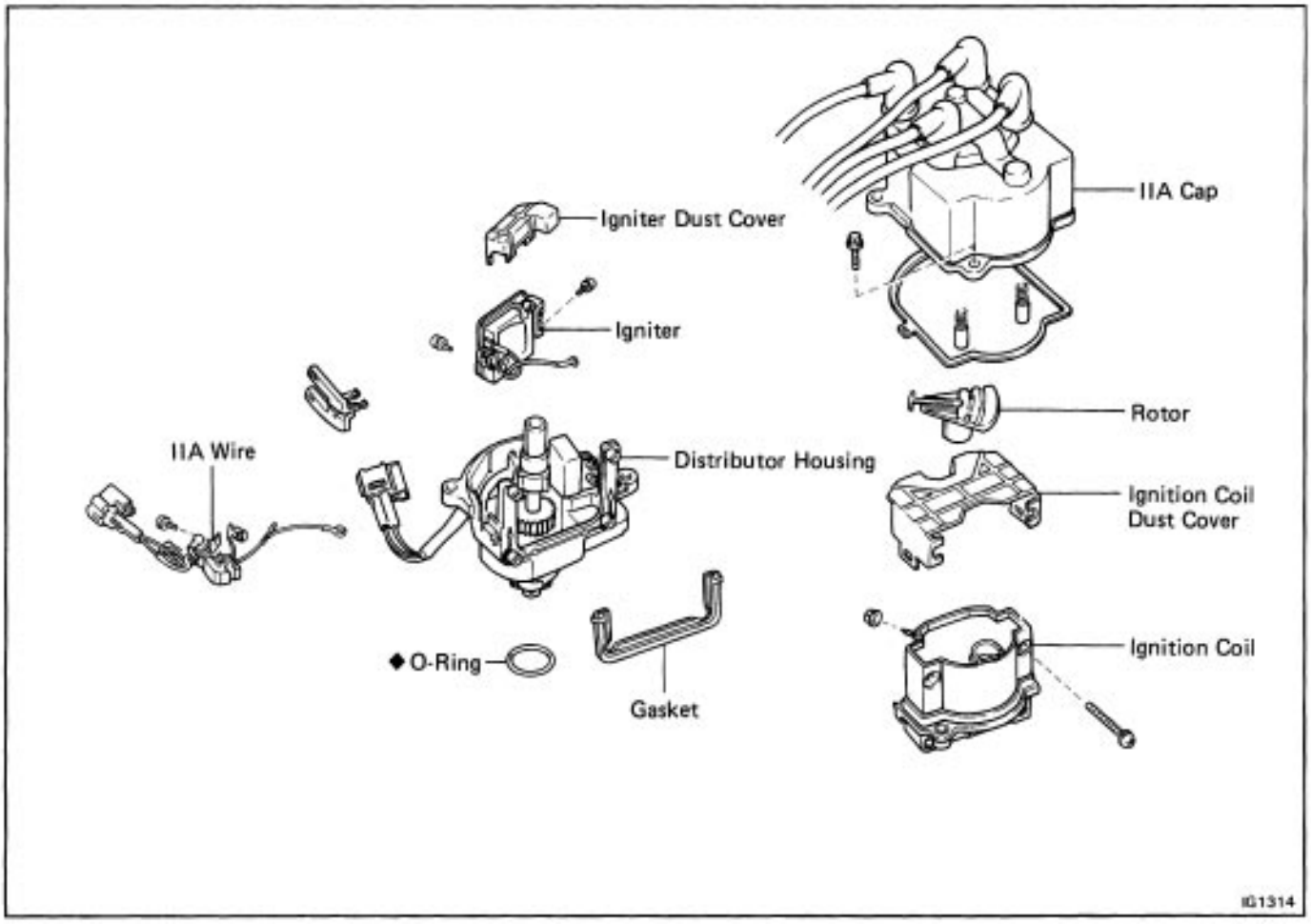

REMOVAL OF IIA

1. DISCONNECT CABLE FROM NEGATIVE TERMINAL OF BATTERY

2. DISCONNECT IIA CONNECTOR

3. DISCONNECT HIGH–TENSION CORDS FROM SPARK PLUGS

(a) Disconnect the cord clamp from the engine hanger.

(b) Disconnect the four high–tension cords from the spark plugs.

4. REMOVE IIA

Remove the two hold–down bolts and pull out the IIA.

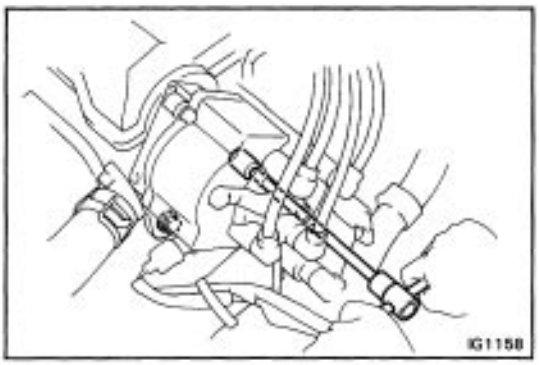

5. REMOVE O–RING

DISASSEMBLY OF IIA

(See page IG–12)

1. REMOVE IIA CAP WITHOUT DISCONNECTING HIGH–TENSION CORDS

2. REMOVE ROTOR

3. REMOVE IGNITION COIL DUST COVER

4. REMOVE IGNITER DUST COVER

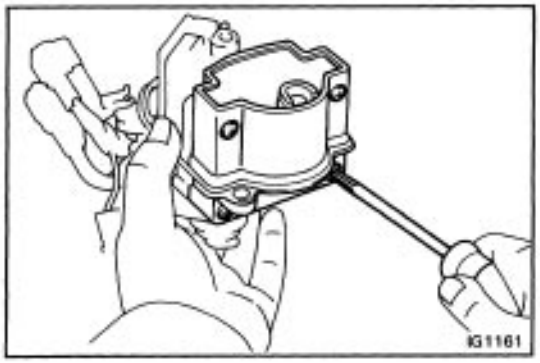

5. REMOVE IGNITION COIL

(a) Remove the two nuts, and disconnect the three wires from the ignition coil terminals.

(b) Remove the four screws, ignition coil and gasket.

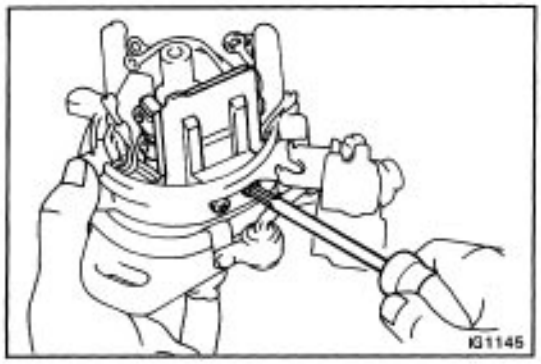

6. REMOVE IGNITER

(a) Remove the two nuts, and disconnect the three wires from the igniter terminals.

(b) Remove the two screws and igniter.

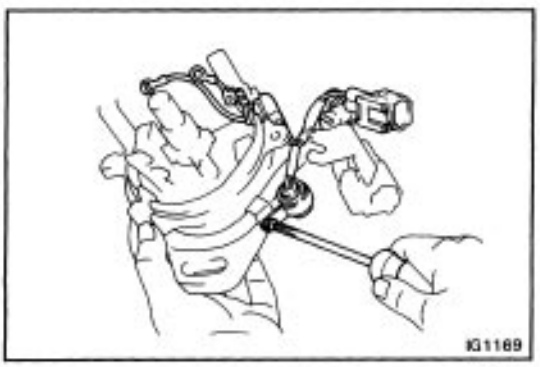

7. REMOVE IIA WIRE

(a) Disconnect the connector from the cord clamp.

(b) Remove the screw and condenser.

(c) Remove the grommet of the wire from the housing.

INSPECTION OF IIA

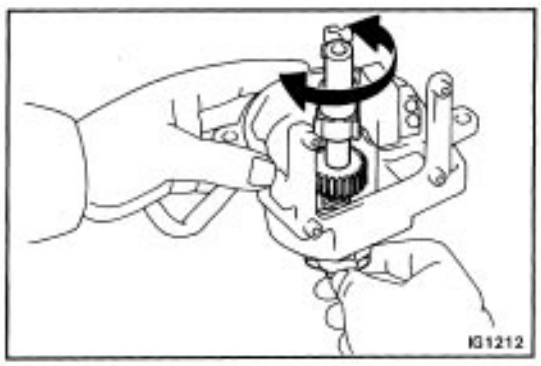

INSPECT GOVERNOR SHAFT

Turn the governor shaft and check that it is not rough or worn.

If it feels rough or worn, replace the distributor housing.

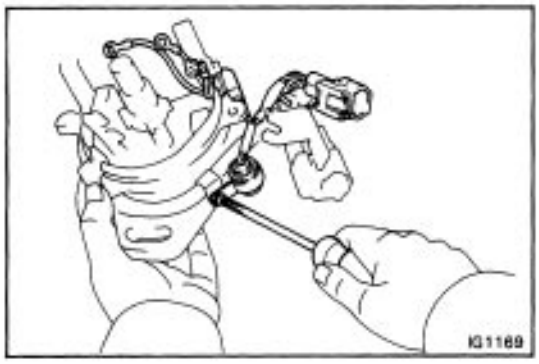

ASSEMBLY OF IIA

(See page IG–12)

1. INSTALL IIA WIRE

(a) Fit the wire grommet to the housing.
(b) Install the IIA wire with the screw.
(c) Install the connector to the cord clamp.

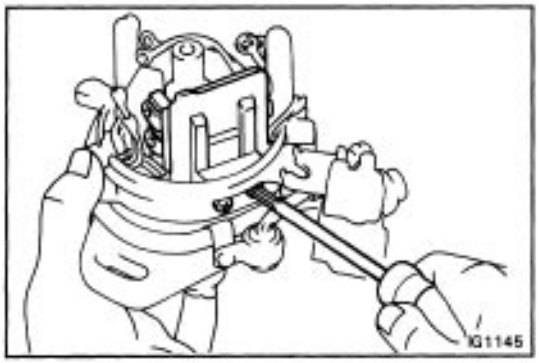

2. INSTALL IGNITER

(a) Install the igniter with the two screws.

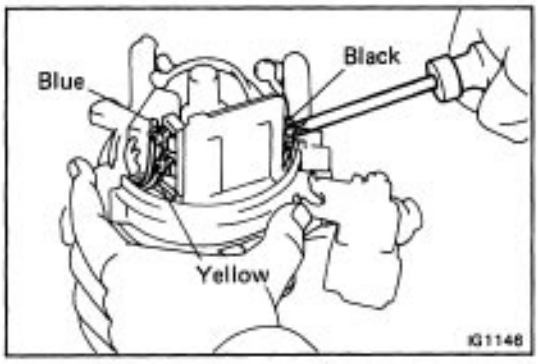

(b) Connect the three wires to the igniter terminals with the three screws.

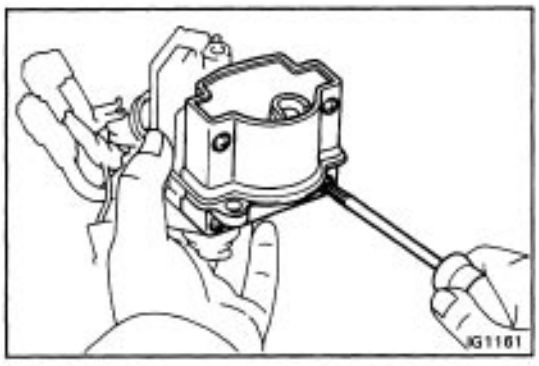

3. INSTALL IGNITION COIL

(a) Install the gasket and ignition coil with the four screws.

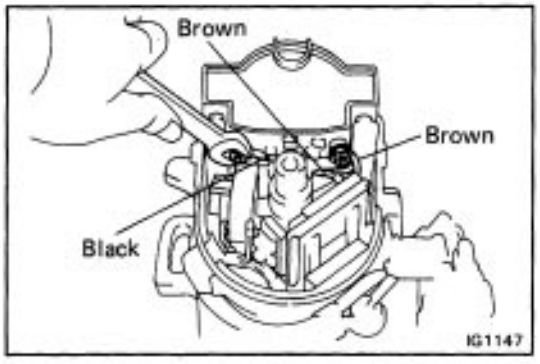

(b) Connect the three wires to the ignition coil terminals with the two nuts.

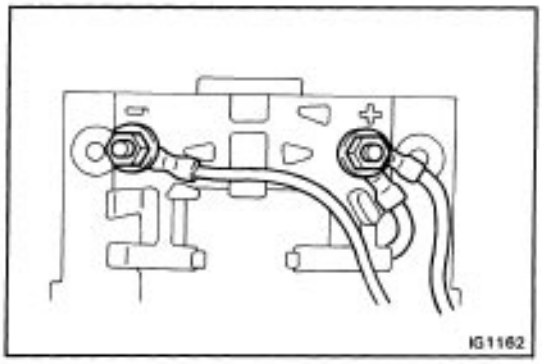

NOTICE:

- **When connecting the wires to the ignition coil, insert both properly into their grooves found on the side of the ignition coil.**
- **Be sure that of the wires do not contact with signal rotor or housing.**

3. INSTALL IGNITION COIL DUST COVER

4. INSTALL ROTOR

5. INSTALL IIA CAP AND HIGH–TENSION CORDS

INSTALLATION OF IIA

1. SET NO.1 CYLINDER TO TDCI COMPRESSION

Turn the crankshaft clockwise, and position the slit of the intake camshaft as shown in the figure.

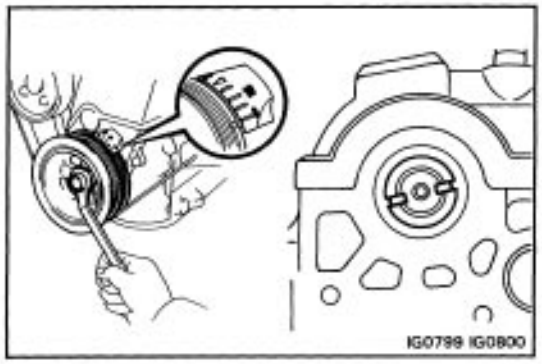

2. INSTALL IIA

(a) Install a new O–ring to the housing.

(b) Apply a light coat of engine oil on the O–ring.

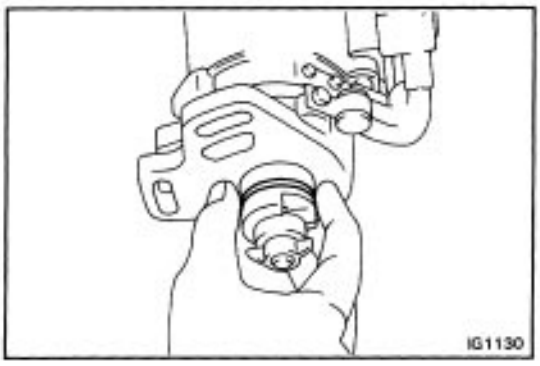

(c) Align the cutout of the coupling with the line of the housing.

(d) Insert the IIA, aligning the center of the flange with that of bolt hole on the cylinder head.

(e) Lightly tighten the two hold–down bolts.

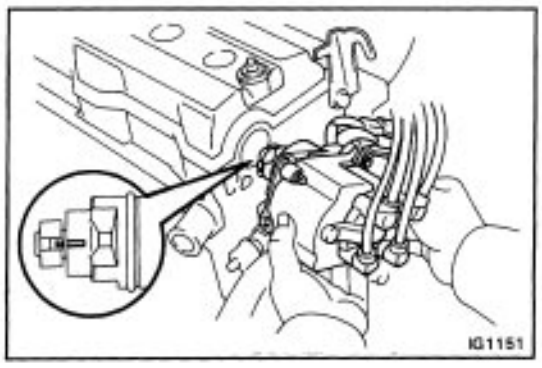

3. CONNECT HIGH–TENSION CORDS TO SPARK PLUGS

Firing order: 1 – 3 – 4 – 2

4. CONNECT IIA CONNECTOR

5. CONNECT CABLE TO NEGATIVE TERMINAL OF BATTERY

6. WARM UP ENGINE

Allow the engine to reach normal operating temperature.

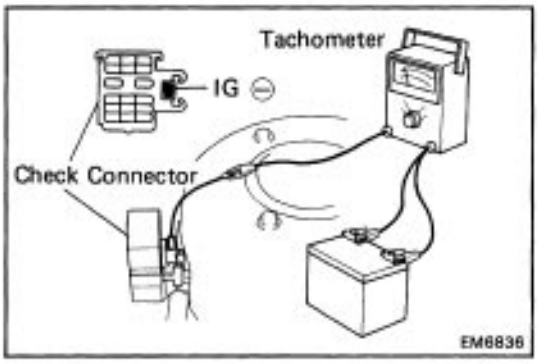

7. CONNECT TACHOMETER AND TIMING LIGHT TO ENGINE

Connect the tachometer (+) terminal to the terminal IGS of the check connector.

NOTICE:

- **NEVER allow the tachometer terminal to touch ground as it could result in damage to the igniter and/or ignition coil.**
- **As some tachometers are not compatible with this ignition system, we recommend that you confirm the compatibility of your until before using.**

8. ADJUST IGNITION TIMING

(a) Using SST, connect terminals TE 1 and E 1 of the check connector.
SST 09843–18020

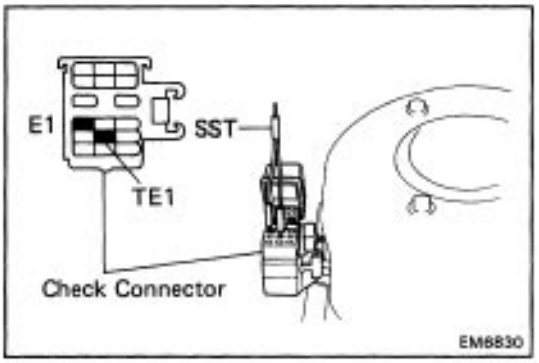

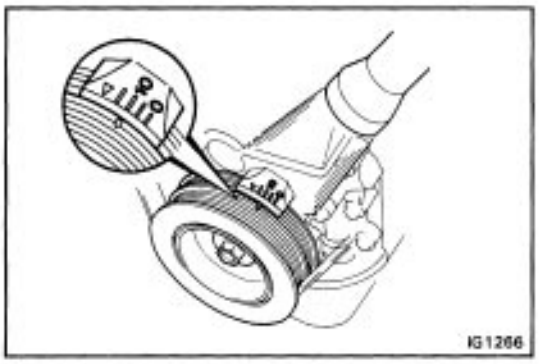

(b) Using a timing light, check the ignition timing.
Ignition timing: 100 BTDC @ idle
(Transmission in N range)

(c) Loosen the two hold–down bolts, and adjust by turning the IIA.

(d) Tighten the hold–down bolts, and recheck the ignition timing.

Torque: 200 kg–cm (14 ft–lb, 20 N–m)

9. FURTHER CHECK IGNITION TIMING

(a) Remove SST from the check connector.
SST 09843–18020

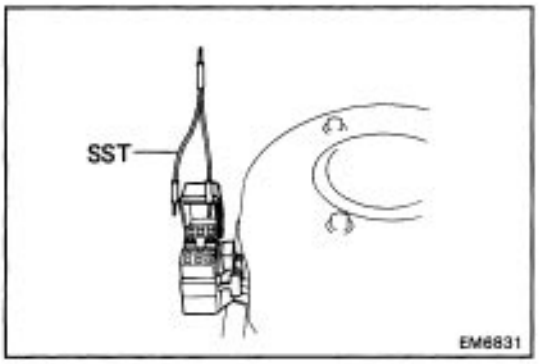

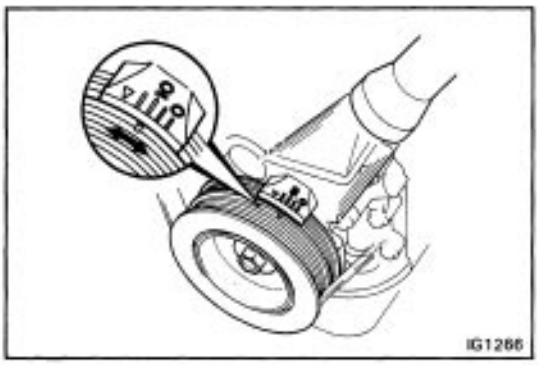

(b) Check the ignition timing.
Ignition timing: 5 – 150 BTDC @ idle
(Transmission in N range)
HINT: The timing mark moves in a range between 5° and 15°.

(c) Disconnect the tachometer and timing light.

DISTRIBUTOR (4A–GE)

COMPONENTS

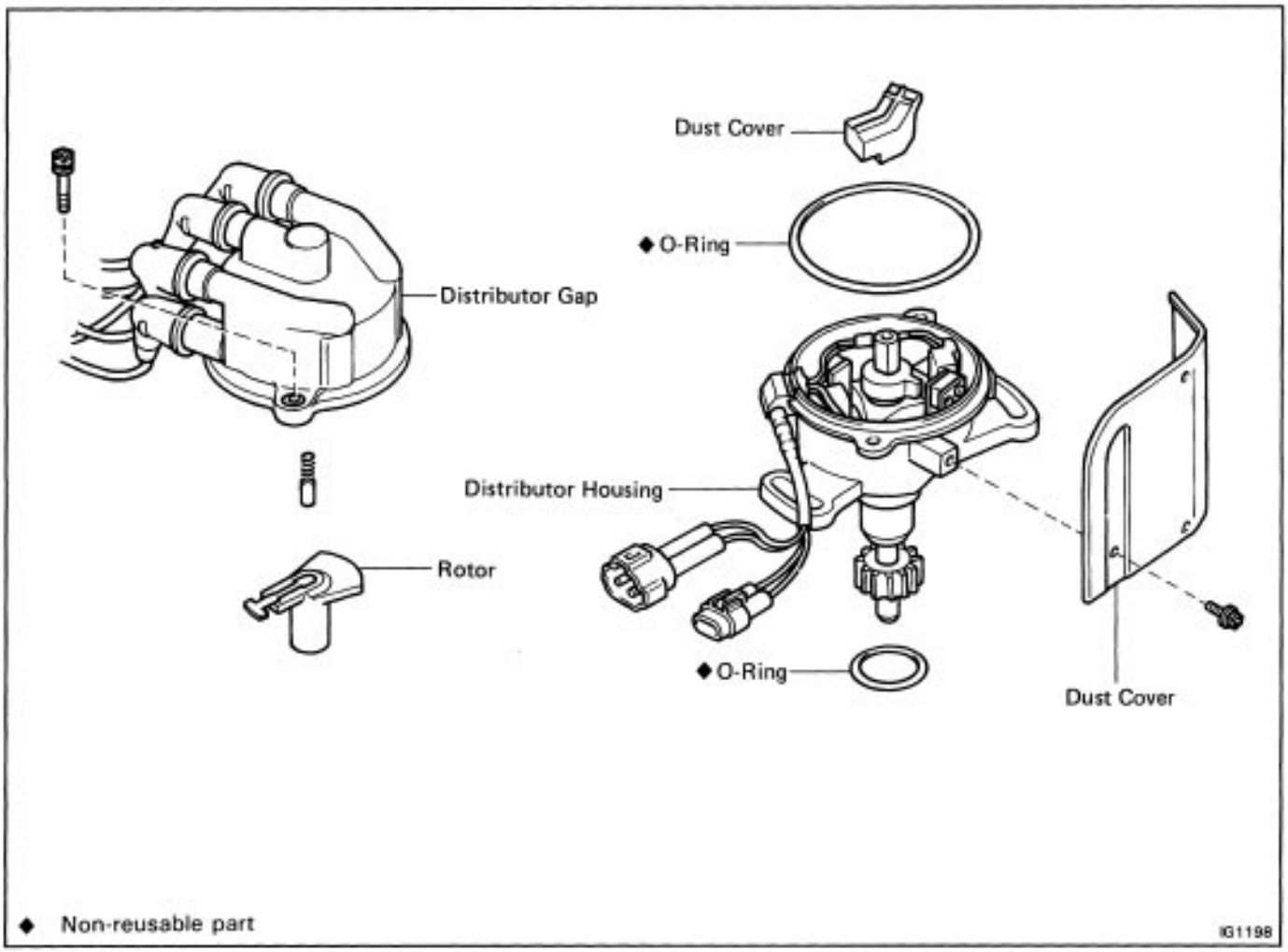

REMOVAL OF DISTRIBUTOR

1. DISCONNECT CABLE FROM NEGATIVE TERMINAL OF BATTERY

2. DISCONNECT HIGH–TENSION CORDS FROM SPARK PLUGS AND IGNITION COIL

3. DISCONNECT DISTRIBUTOR CONNECTORS

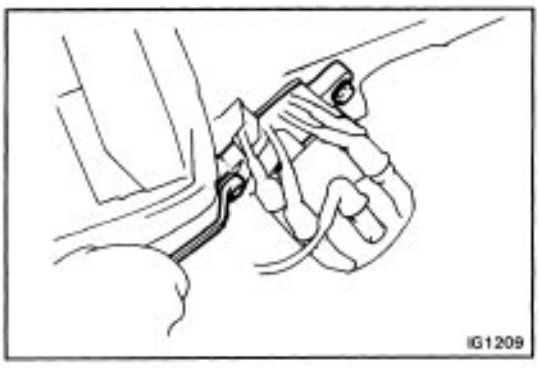

4. REMOVE DISTRIBUTOR

Remove the hold–down bolts and pull out the distributor.

5. REMOVE O–RING

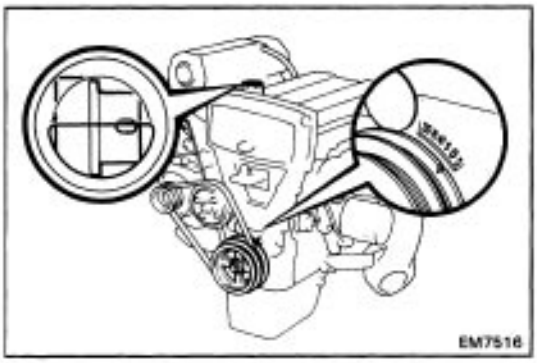

INSTALLATION OF DISTRIBUTOR

1. SET NO. 1 CYLINDER TO TDC/COMPRESSION

(a) Turn the crankshaft pulley, and align its groove with the ”0” mark on the No. 1 timing belt cover.

(b) Remove the oil filler cap, and check that you can see the cavity of the camshaft.
If necessary, turn the crankshaft pulley one complete revolution.

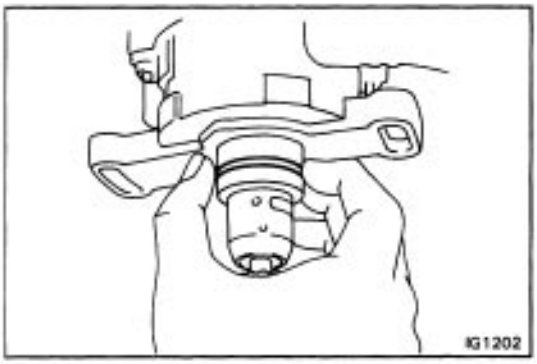

2. INSTALL DISTRIBUTOR

(a) Install a new O–ring to the housing.
HINT: Always use a new O–ring when installing the distributor.

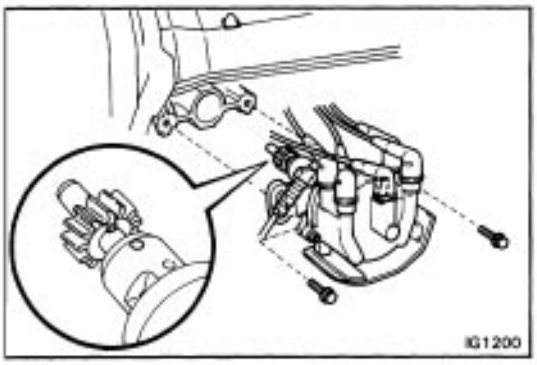

(b) Align the drilled mark on the driven gear with the groove of the housing.

(c) Insert the distributor, aligning the center of the flange
with that of the bolt hole on the cylinder head.

(d) Lightly tighten the bolts.

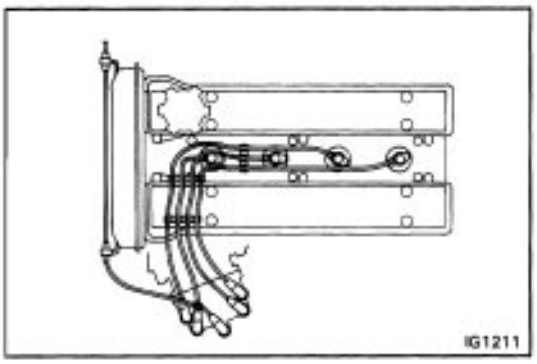

3. CONNECT DISTRIBUTOR CONNECTORS

4. CONNECT HIGH–TENSION CORDS TO SPARK PLUGS AND IGNITION COIL

Connect the high–tension cords as shown in the illustration.

5. CONNECT CABLE TO NEGATIVE TERMINAL OF BATTERY

6. WARM UP ENGINE

Allow the engine to reach normal operating temperature.

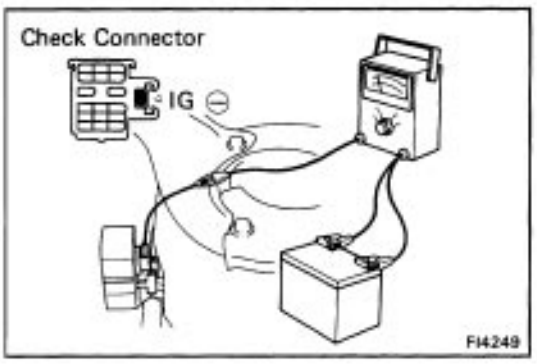

7. CONNECT TACHOMETER AND TIMING LIGHT TO ENGINE

Connect the tachometer (+) terminal to the terminal IG Q of the check connector.

NOTICE:

- **NEVER allow the tachometer terminal to touch ground as it could result in damage to the igniter and/or ignition coil.**
- **As some tachometers are not compatible with this ignition system, we recommend that you confirm the compatibility of your unit before using.**

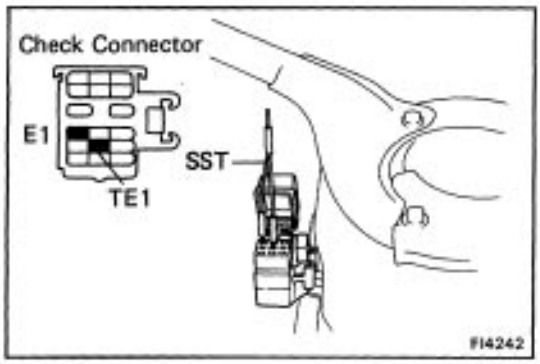

8. ADJUST IGNITION TIMING

(a) Using SST, connect terminals TE 1 and E 1 of check connector.
SST 09843–18020

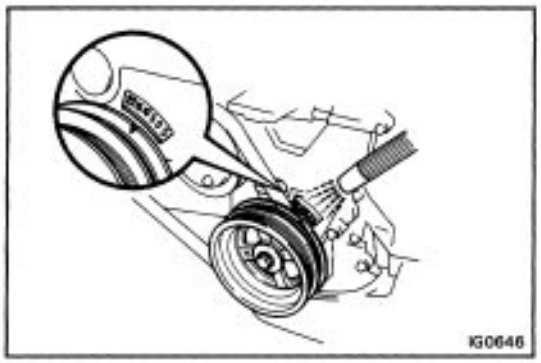

(b) Using a timing light, check the ignition timing.
Ignition timing: 10˚ BTDC @ idle
(Transmission in N range)

(c) Loosen the two hold–down bolts, and adjust by turning the distributor.

(d) Tighten the hold–down bolts, and recheck the ignition timing.

Torque: 200 kg–cm (14 ft–lb, 20 N–m)

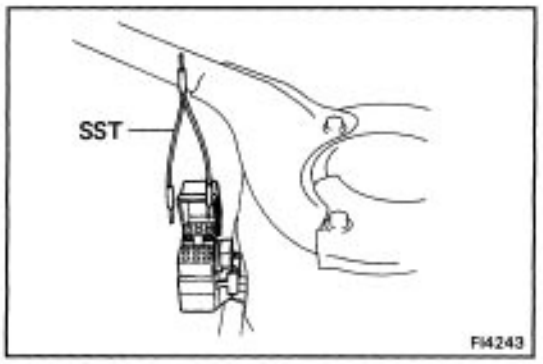

9. FURTHER CHECK IGNITION TIMING

(a) Remove SST from the check connector.
SST 09843–18020

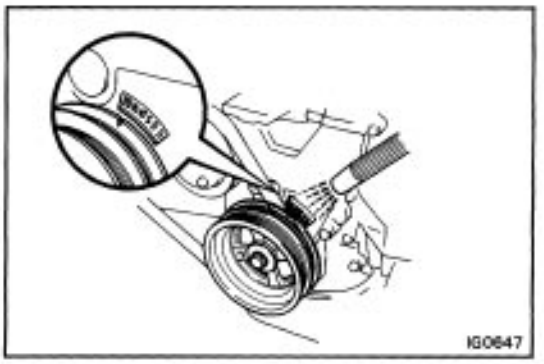

(b) Check the ignition timing.
Ignition timing: Approx. 161 BTDC @ Idling
(Transmission in N range)

(c) Disconnect the tachometer and timing light.

INTRODUCTION

HOW TO USE THIS MANUAL

To assist you in finding your way through the manual, the Section Title and major heading are given at the top of every page.

An **INDEX** is provided on the first page of each section to guide you to the item to be repaired.

At the beginning of each section, **PRECAUTIONS** are given that pertain to *all* repair operations contained in that section. *Read these precautions before starting any repair task.*

TROUBLESHOOTING tables are included for each system to help you diagnose the problem and find the cause. The repair for each possible cause is referenced in the remedy column to quickly lead you to the solution.

REPAIR PROCEDURES

Most repair operations begin with an overview illustration. It identifies the components and shows how the parts fit together.

Example:

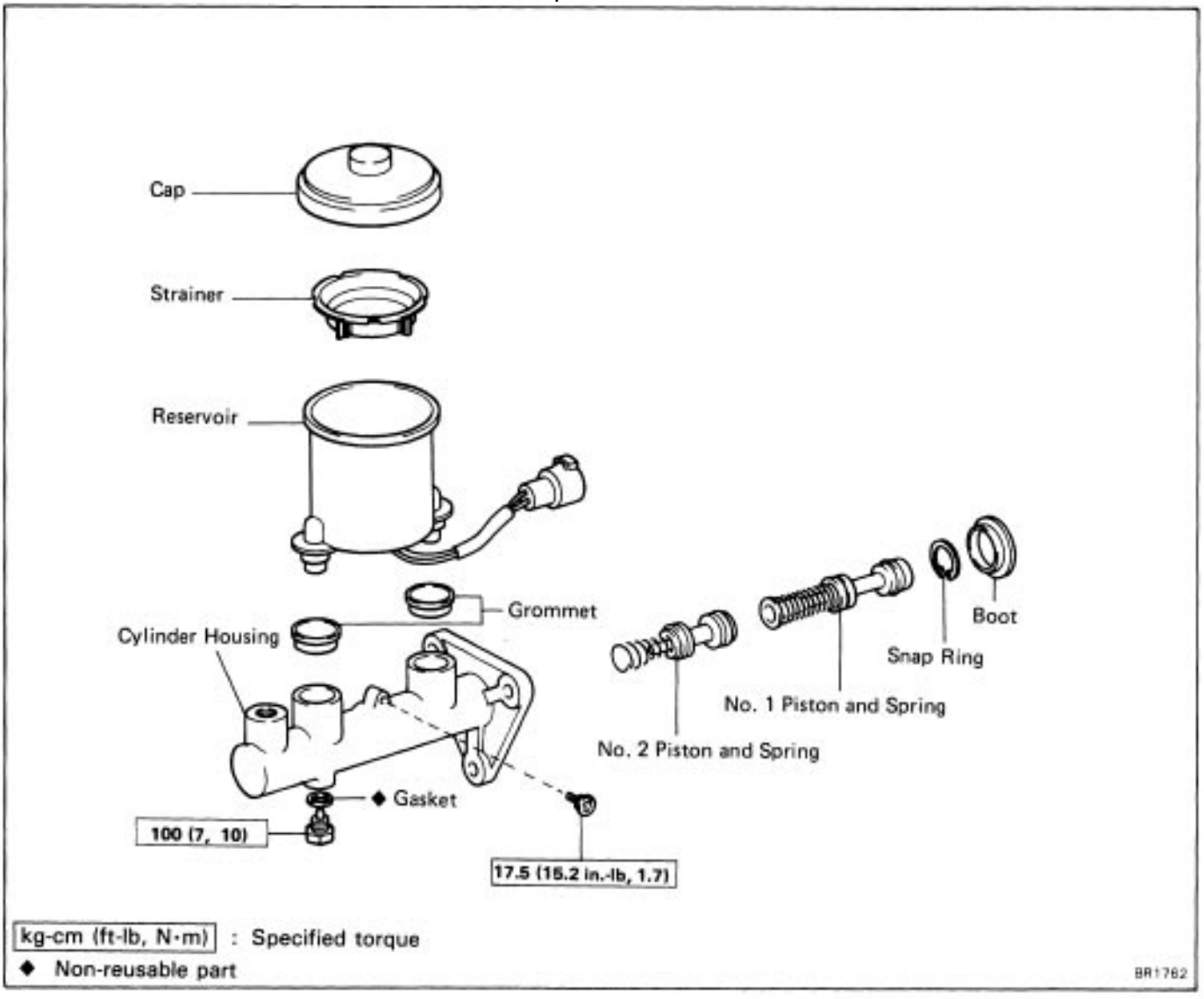

The procedures are presented in a step–by–step format:

- The illustration shows what to do and where to do it.
- The task heading tells what to do.
- The detailed text tells how to perform the task and gives other information such as specifications and warnings.

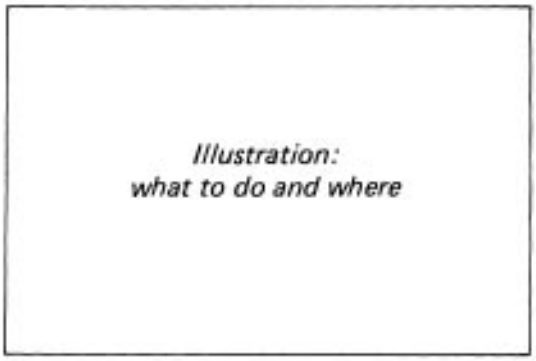

Task head: what to do

Example: ↓

21. CHECK PISTON STROKE OF OVERDRIVE BRAKE

(a) Place SST and a dial indicator onto the overdrive brake piston as shown in the figure.
SST 09350–30020 (09350–06120)
↑ ↑
Set No. *Component part No.*
Detailed text: how to do task
↓

(b) Measure the stroke applying and releasing the compressed air (4 – 8 kg/cm', 57 – 114 psi or 392 – 785 kPa) as shown in the figure.
Piston stroke: 1.40 – 1.70 mm (0.0551 – 0.0669 in.)

Specification

This format provides the experienced technician with a FAST TRACK to the information needed. The upper case task heading can be read at a glance when necessary, and the text below it provides detailed information. Important specifications and warnings always stand out in bold type.

REFERENCES

References have been kept to a minimum. However, when they are required you are given the page to refer to.

SPECIFICATIONS

Specifications are presented in bold type throughout the text where needed. You never have to leave the procedure to look up your specifications. They are also found in Appendix A, for quick reference.

CAUTIONS, NOTICES, HINTS:

- CAUTIONS are presented in bold type, and indicate there is a possibility of injury to you or other people.
- NOTICES are also presented in bold type, and indicate the possibility of damage to the components being repaired.
- HINTS are separated from the text but do not appear in bold. They provide additional information to help you efficiently perform the repair.

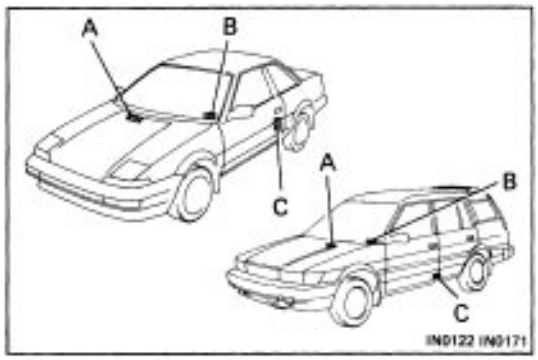

IDENTIFICATION INFORMATION

VEHICLE IDENTIFICATION NUMBER

The vehicle identification number is stamped on the cowl panel.

This number has also been stamped on the vehicle identification number plate and certification regulation label.

A. Vehicle Identification Number
B. Vehicle Identification Number Plate
C. Certification Regulation Label

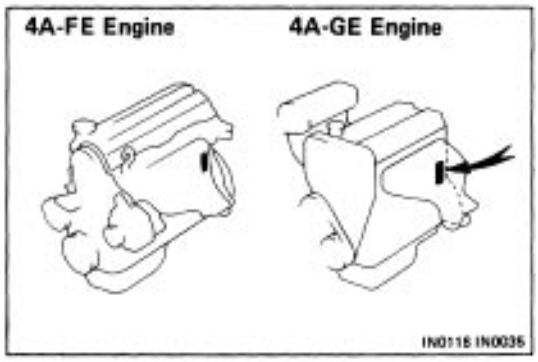

ENGINE SERIAL NUMBER

The engine serial number is stamped on the engine block as shown.

GENERAL REPAIR INSTRUCTIONS

1. Use fender seat and floor covers to keep the vehicle clean and prevent damage.
2. During disassembly, keep parts in the appropriate order to facilitate reassembly.
3. Observe the following:
   (a) Before performing electrical work, disconnect the negative cable from the battery terminal.
   (b) If it is necessary to disconnect the battery for inspection or repair, always disconnect the cable from the negative (–) terminal which is grounded to the vehicle body.
   (e) To prevent damage to the battery terminal post, loosen the terminal nut and raise the cable straight up without twisting or prying it.
   (d) Clean the battery terminal posts and cable terminals with a shop rag. Do not scrape them with a file or other abrasive objects.
   (e) Install the cable terminal to the battery post with the nut loose, and tighten the nut after installation.
   Do not use a hammer to tap the terminal onto the post.
   (f) Be sure the cover for the positive (+) terminal is properly in place.

4. Check hose and wiring connectors to make sure that they are secure and correct.
5. Non–reusable parts
   (a) Always replace cotter pins, gaskets, O–rings and oil seals etc. with new ones.
   (b) Non–reusable parts are indicated in the component illustrations by the "♦" symbol.

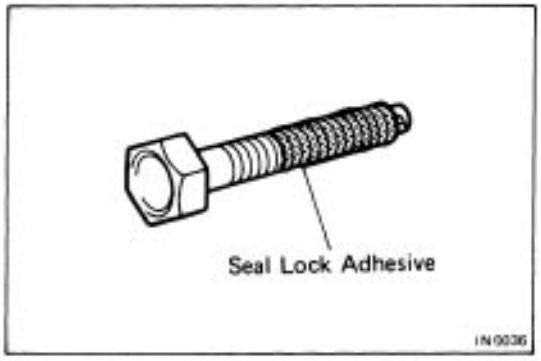

6. Precoated parts
   Precoated parts are bolts and nuts, etc. that are coated with a seal lock adhesive at the factory.
   (a) If a precoated part is retightened, loosened or caused to move in any way, it must be precoated with the specified adhesive.
   (b) Recoating of precoated parts
   (1) Clean off the old adhesive from the bolt, nut or threads.
   (2) Dry with compressed air.
   (3) Apply the specified seal lock adhesive to the bolt or nut threads.
   (c) Precoated parts are indicated in the component illustrations by the "★" symbol.
7. When necessary, use a sealer on gaskets to prevent leaks.
8. Carefully observe all specifications for bolt tightening torques. Always use a torque wrench.
9. Use of special service tools (SST) and special service materials (SSM) may be required, depending on the nature of the repair. Be sure to use SST and SSM where specified and follow the proper work procedure. A list of SST and SSM can be found at the back of this manual.
10. When replacing fuses, be sure the new fuse has the correct amperage rating. DO NOT exceed the rating or use one with a lower rating.
11. Care must be taken when jacking up and supporting the vehicle. Be sure to lift and support the vehicle at the proper locations. (See page IN–27)
    (a) If the vehicle is to be jacked up only at the front or rear end, be sure to block the wheels at the opposite end in order to ensure safety.
    (b) After the vehicle is jacked up, be sure to support it on stands. It is extremely dangerous to do any work on a vehicle raised on a jack alone, even for a small job that can be finished quickly.

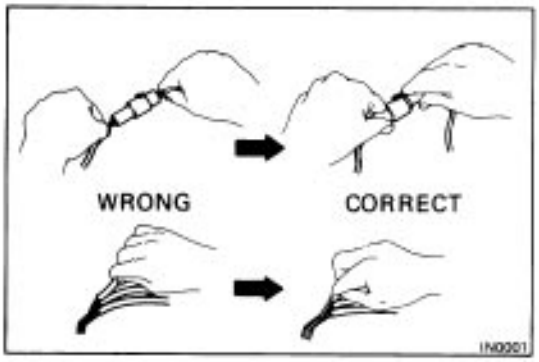

12. Observe the following precautions to avoid damage to the parts:
    (a) Do not open the cover or case of the ECU unless absolutely necessary. (If the IC terminals are touched, the IC may be destroyed by static electricity.)
    (b) To disconnect vacuum hoses, pull on the end, not the middle of the hose.
    (c) To pull apart electrical connectors, pull on the connector itself, not the wires.
    (d) Be careful not to drop electrical components, such as sensors or relays. If they are dropped on a hard floor, they should be replaced and not reused.
    (e) when steam cleaning an engine, protect the distributor, coil, air filter, carburetor intake, air pump and VCV from water.
    (f) Never use an impact wrench to remove or install temperature switches or temperature sensors.
    (g) When checking continuity at the wire connector, insert the tester probe carefully to prevent terminals from bending.
    (h) When using a vacuum gauge, never force the hose onto a connector that is too large. Use a step–down adapter instead. Once the hose has been stretched, it may leak.

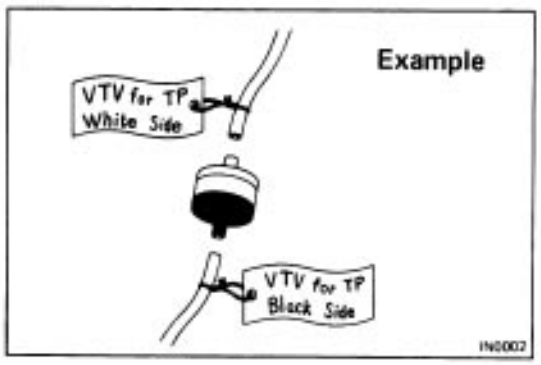

13. Tag hoses before disconnecting them:
    (a) When disconnecting vacuum hoses, use tags to identify how they should be reconnected.
    (b) After completing a job, double check that the vacuum hoses are properly connected. A label under the hood shows the proper layout.

PRECAUTIONS FOR VEHICLES EQUIPPED WITH A CATALYTIC CONVERTER

CAUTION: If large amounts of unburned gasoline flow into the converter, it may overheat and create a fire hazard. To prevent this, observe the following precautions and explain them to your customer.

1. Use only unleaded gasoline.

2. Avoid prolonged idling.

Avoid running the engine at fast idle speed for more than 10 minutes and at idle speed for more than 20 minutes.

3. Avoid spark jump test.

(a) Spark jump test only when absolutely necessary. Perform this test as rapidly as possible.

(b) While testing, never race the engine.

4. Avoid prolonged engine compression measurement.

Engine compression tests must be made as rapidly as possible.

5. Do not run engine when fuel tank is nearly empty.

This may cause the engine to misfire and create an extra load on the converter.

6. Avoid coasting with ignition turned off and prolonged braking.

7. Do not dispose of used catalyst along with parts contaminated with gasoline or oil.

PRECAUTIONS FOR VEHICLES WITH AN AUDIO SYSTEM WITH BUILT–IN ANTI–THEFT SYSTEM

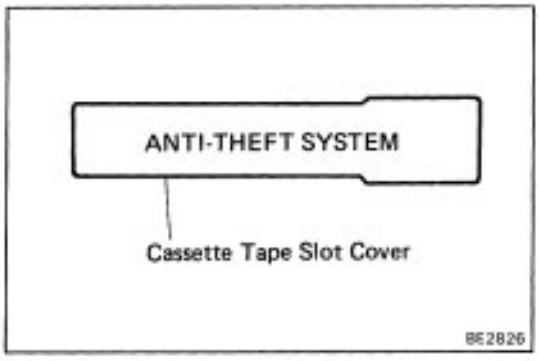

Audio Systems displaying the sign ”ANTI–THEFT SYSTEM” shown on the left has a built–in anti–theft system which makes the audio system soundless if stolen.

If the power source for the audio system is cut even once, the anti–theft system operates so that even if the power source is reconnected, the audio system will not produce any sound unless the ID number selected by the customer is input again. Accordingly, when performing repairs on vehicles equipped with this system, before disconnecting the battery terminals or removing the audio system the customer should be asked for the ID number so that the technician can input the ID number afterwards, or else a request made to the customer to input the ID number.

For the method to input the ID number or cancel the antitheft system, refer to the Owner’s Manual.

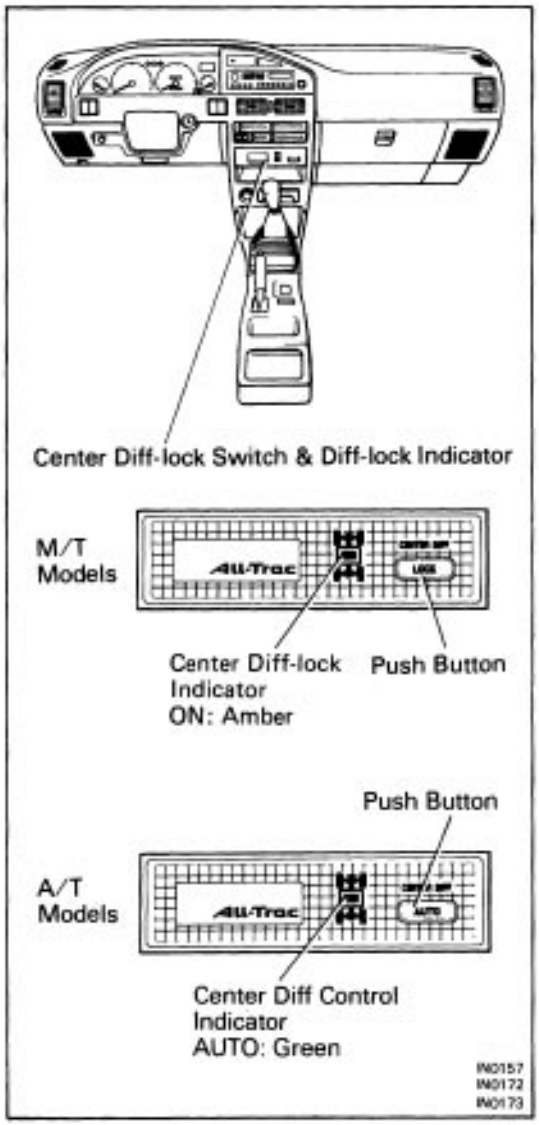

PRECAUTIONS WHEN SERVICING FULL–TIME 4WD VEHICLES

The full–time 4WD Corolla Station Wagon is equipped with two types of transaxle – either the manual transaxle or the automatic transaxle. The center differential system of the manual transaxle is the mechanical lock type. The center differential system of the automatic transaxle is a hydraulic multiplate clutch control type. When carrying out any kind of servicing or testing on a full–time 4WD in which the front or rear wheels are made to rotate (braking test, speedometer test, on–vehicle wheel balancing, etc.), or when towing the vehicle, be sure to observe the precautions given below. If incorrect preparations or test procedures are used, the test cannot be successfully carried out, and may be dangerous as well. Therefore, before beginning any such servicing or test, be sure to check the following items:

(1) Center differential lock type
(2) Center differential mode position
(3) Whether wheels should be touching ground or jacked up
(4) Transmission gear position
(5) Maximum testing vehicle speed
(6) Maximum testing time

Also be sure to observe the following cautions:

(1) Never accelerate or decelerate the vehicle suddenly.
(2) Observe the other cautions given for each individual test.

1. MANUAL TRANSAXLE MODELS (Mechanical Lock Type Center Differential)

BEFORE BEGINNING TEST

During tests with a brake tester or chassis dynamometer, such as braking force tests or speedometer tests, if only the front or rear wheels are to be rotated, it is necessary to set the position of the center differential to the FREE position or to the LOCK position depending on the type of test being perform.

(1) Select the position of the center differential by pushing the center differential control switch.
(2) After selecting the position, confirm the operation of indicator light and center differential.

HINT: Move the vehicle backward or forward slightly if the indicator light does not operate correctly when the center differential control switch is turned ON or OFF.

CAUTIONS WHEN CENTER DIFFERENTIAL CONTROL SWITCH IS TURNED ON

- Operate the switch only when all four wheels are stopped or when driving with the wheels in a straight line.
- Never operate the switch under the following conditions.
  (1) When any tire is slipping.
  (2) When any tire is spinning freely.
  (3) When swerving or cornering.

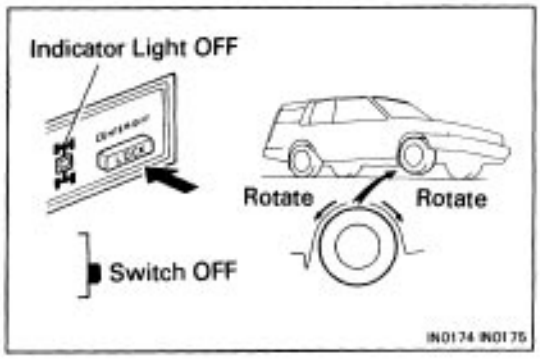

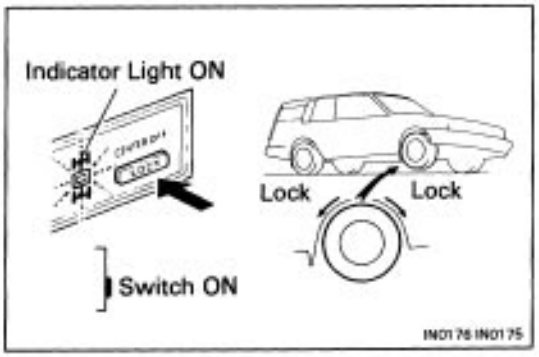

FREE Position

Center Differential		Wheel
Control Switch	Indicator Light	
OFF	OFF	A lifted wheel can be rotated even if only one wheel is lifted up, as long as transmission is in neutral.

LOCK Position

Center Differential		Wheel
Control Switch	Indicator Light	
ON	ON	A lifted wheel cannot be rotated if only one wheel is lifted up, even if transmission is in neutral.

CAUTIONS WHEN CENTER DIFFERENTIAL IS IN ”FREE” OR ”LOCK” POSITION

FREE POSITION

(1) Do not engage the clutch or pump the accelerator or brakes suddenly. Always start slowly and decelerate gradually.

(2) If either the front or the rear wheels are placed on the tester rollers in the FREE position, be careful not to exceed the following limits:

Maximum speed:

Speed indicated on speedometer 19 mph (30km/h)

or

Wheel speed (Tester speed) 38 mph (60km/h)

Maximum test time: 60 sec.

Note that the actual wheel speed (tester speed) is twice the speed indicated by the speedometer due to center di ferential operation.

LOCK POSITION

(1) Do not engage the clutch or pump the accelerator or brakes suddenly. Always start slowly and decelerate gradually.

(2) Be sure to conduct the test with the rear propeller shaft removed.

BRAKING FORCE TEST

HINT: According to the vehicle speed during the test, select one of the two test methods described below, either A or B.

Method A : (Low Speed Test) Conduct the test with the center differential in the "FREE" position.

Method B : (High Speed Test) Conduct the test with the center differential in the "LOCK" position and with the rear propeller shaft removed.

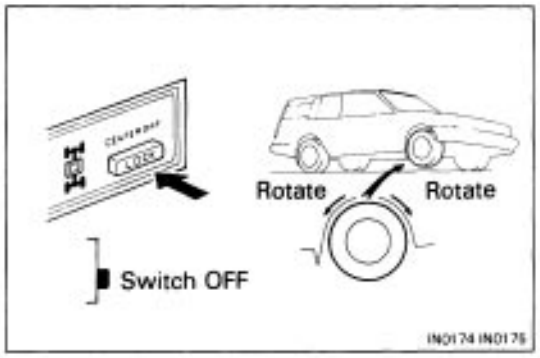

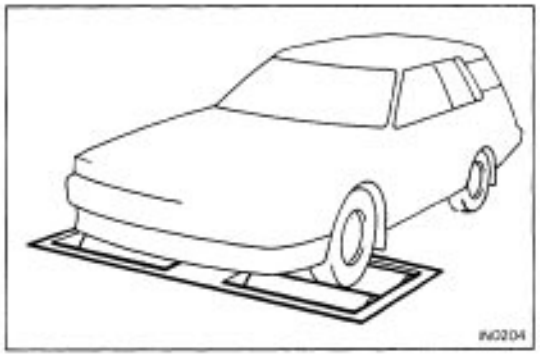

TEST METHOD A (Low Speed Test)

Speed indicates on speedometer:
Below 19 mph (30km/h),
Wheel speed (tester speed):
Below 38 mph (60km/h) and
Test time: Within 60 sec.

1. PUT CENTER DIFFERENTIAL IN "FREE" POSITION

(1) Set the center differential control switch to OFF and check that the differential lock indicator light goes off.

(2) Put the transmission in neutral.

(3) Jack up one wheel and check that the wheel can be rotated by hand.

2. PLACE WHEELS (EITHER FRONT OR REAR) TO BE TESTED ON TESTER ROLLERS

3. DISCONNECT INERTIA WEIGHT FROM TESTER ROLLER (If equipped with it)

4. PUT TRANSMISSION IN NEUTRAL

5. OPERATE TESTER ROLLERS AND MEASURE BRAKING FORCE WITH ENGINE AT IDLE

HINT:

1. Since different types of tester are used, such as specialized brake testers and combination testers with built–in chassis dynamometer, speedometer tester, brake tester, etc., conduct the test in accordance with the instructions furnished for the tester model in use.
2. The actual wheel speed (tester speedy is twice the speed indicated by the speedometer due to center differential operation, so take adequate precautions.

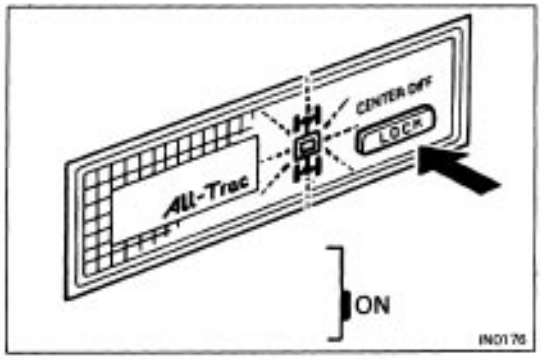

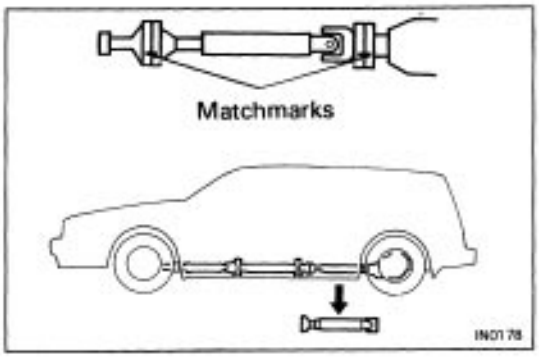

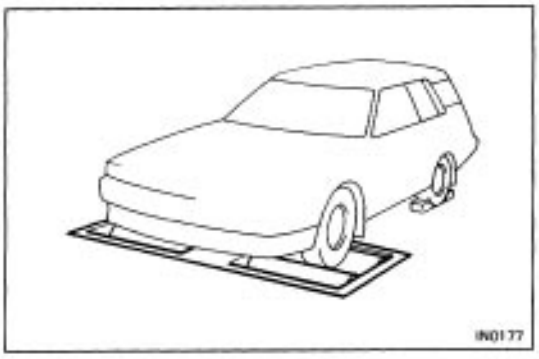

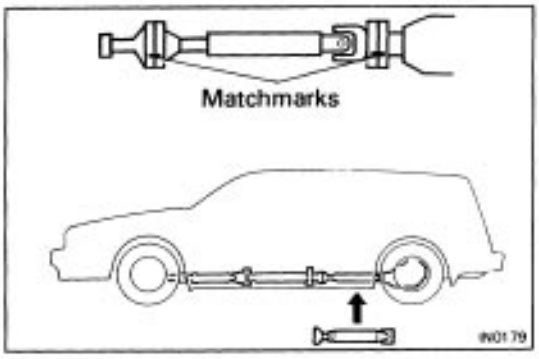

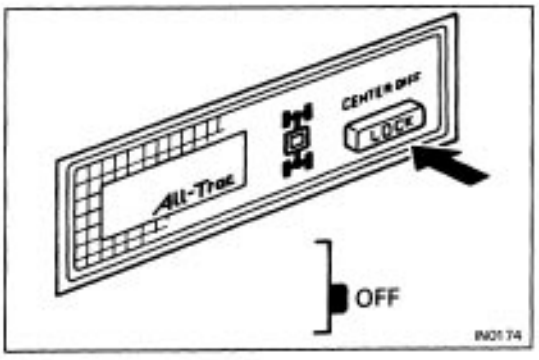

TEST METHOD B (High Speed Test)

[Vehicle speed: Over 38 mph (60km/h)]

1. PUT CENTER DIFFERENTIAL IN "LOCK" POSITION

(1) Set the center differential control switch to ON and check that the differential lock indicator light goes on.

HINT: If the indicator light does not go on when the center differential control switch is turned on, move the vehicle backward or forward slightly.

(2) Put the transmission in neutral.

(3) Jack up one wheel and check that the wheel cannot be rotated by hand.

2. REMOVE REAR PROPELLER SHAFT

Make matching marks on each end of the rear propeller shaft, then remove it.

3. PLACE WHEELS (EITHER FRONT OR REAR) TO BE TESTED ON TESTER ROLLERS

4. DISCONNECT INERTIA WEIGHT FROM TESTER ROLLER (If equipped with it)

5. PUT TRANSMISSION IN NEUTRAL

6. OPERATE TESTER ROLLERS AND MEASURE BRAKING FORCE WITH ENGINE AT IDLE

HINT: Since different types of tester are used, such as specialized brake testers and combination testers with built in chassis dynamometer, speedometer tester, brake tester, etc., conduct the test in accordance with the instructions furnished for the tester model in use.

7. AFTER FINISHING TEST, INSTALL REAR PROPELLER SHAFT

Align the matching marks made on the rear propeller shaft before removal, then install it.

8. SET CENTER DIFFERENTIAL CONTROL SWITCH TO OFF

HINT: If the indicator light does not go off when the center differential control switch is turned off, move the vehicle backward or forward slightly and check that the indicator light goes off.

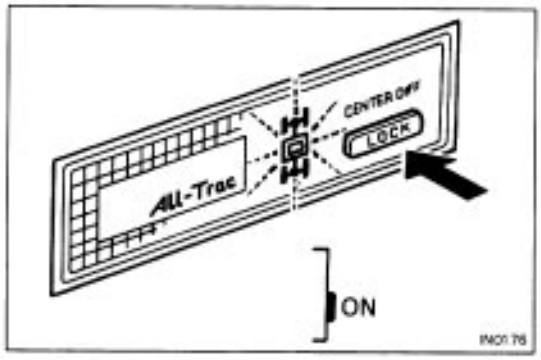

SPEEDOMETER TEST OR OTHER TESTS

(Using Speedometer Tester or Chassis Dynamometer)

1. PUT CENTER DIFFERENTIAL IN "LOCK" POSITION

(1) Set the differential control switch to ON and check that the differential lock indicator light goes on.

HINT: If the indicator light does not go on when the center differential control switch is turned on, move the vehicle backward or forward slightly.

(2) Put the transmission in neutral.

(3) Jack up one wheel and check that the wheel cannot be rotated by hand.

2. REMOVE REAR PROPELLER SHAFT

Make matching marks on each end of the rear propeller shaft, then remove it.

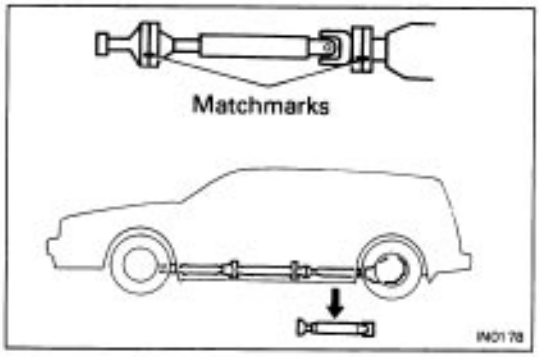

3. PLACE FRONT WHEELS ON TESTER ROLLERS

4. CHOCK REAR WHEELS

5. APPLY PARKING BRAKE

6. DISCONNECT INERTIA WEIGHT FROM TESTER

ROLLER (If equipped with it)

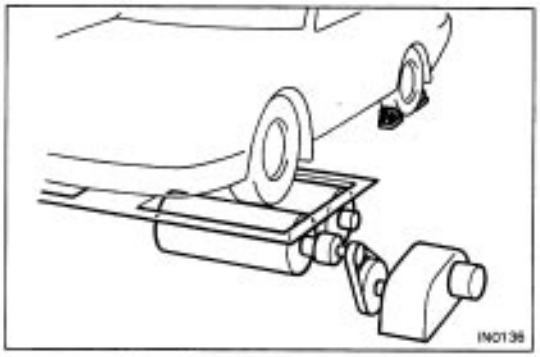

7. TEST VEHICLE

(1) Start the engine.

(2) Engage the clutch slowly and gradually increase the speed as the test is conducted.

(3) After the test is finished, reduce the speed gradually and stop the engine.

8. AFTER FINISHING TEST, INSTALL REAR PROPELLER SHAFT

Align the matching marks made on the rear propeller shaft before removal, then install it.

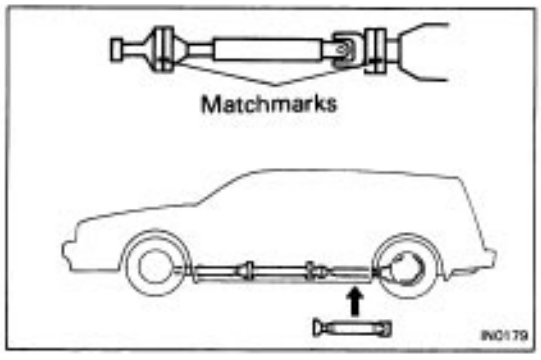

9. SET CENTER DIFFERENTIAL CONTROL SWITCH TO OFF

HINT: If the indicator light does not go off when the center differential control switch is turned off, move the vehicle backward or forward slightly and check that the indicator light goes off.

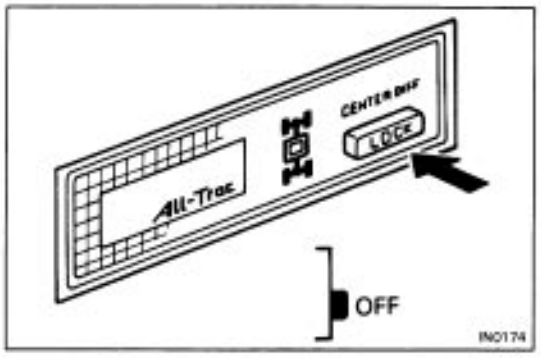

ON–VEHICLE WHEEL BALANCING

NOTICE:

1. When doing on–vehicle wheel balancing on a full–time 4WD vehicle, to prevent the wheels from rotating at different speeds or indifferent directions from each other (which could lead to damage to the center differential or transaxle gears), always be sure to observe the following precautions:

(1) All four wheels should be jacked up, clearing the ground completely.

(2) The wheels should be driven with both the engine and the wheel balancer.

(3) The mechanical lock–type center differential should be in the LOCK position.

(4) The parking brake lever should be fully re–leased.

(5) None of the brakes should be allowed to drag.

2. Avoid sudden acceleration, deceleration and braking.

3. Carry out the wheel balancing with the transmission in 3rd or 4th gear.

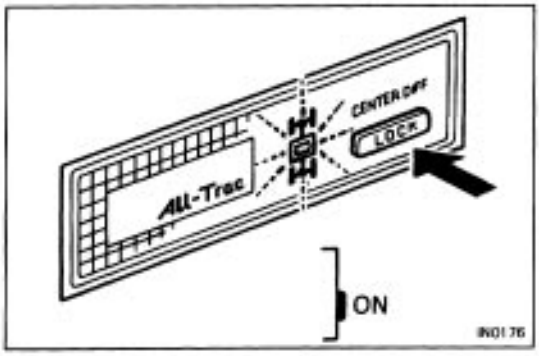

1. PUT CENTER DIFFERENTIAL IN "LOCK" POSITION

(1) Set the center differential control switch to ON and check that the differential lock indicator light goes on.

HINT: If the indicator light does not go on when the center differential control switch is turned on, move the vehicle backward or forward slightly.

(2) Put the transmission in neutral.

(3) Jack up one wheel and check that the wheel cannot be rotated by hand.

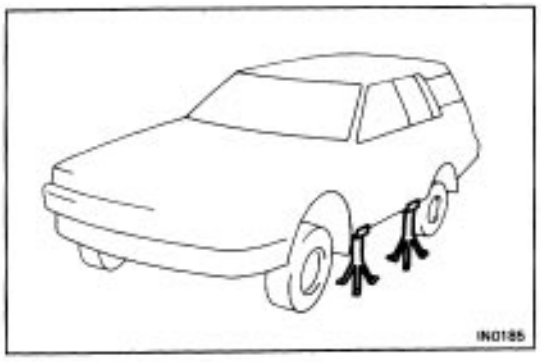

2. JACK UP VEHICLE SO THAT ALL FOUR WHEELS CAN ROTATE

The wheels will be rotating fast, so make sure the vehicle is firmly supported on stands.

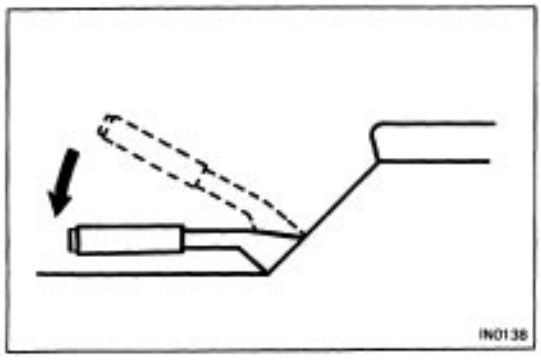

3. RELEASE PARKING BRAKE FULLY

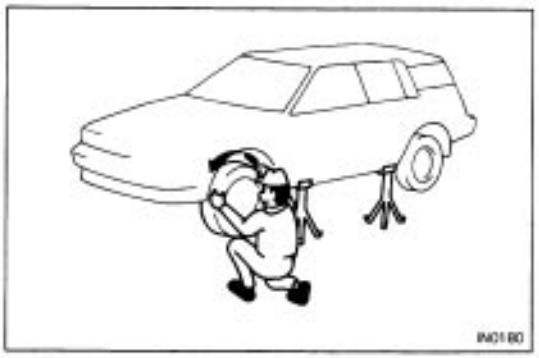

4. MAKE SURE THAT BRAKES ARE NOT DRAGGING ON ANY OF FOUR WHEELS

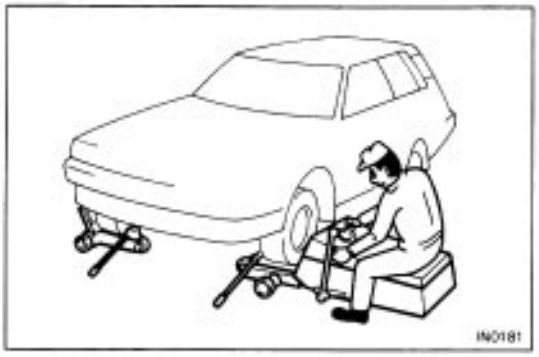

5. PLACE WHEEL TO BE BALANCED ON WHEEL BALANCER

Follow the procedure specified by the wheel balancer manufacturer.

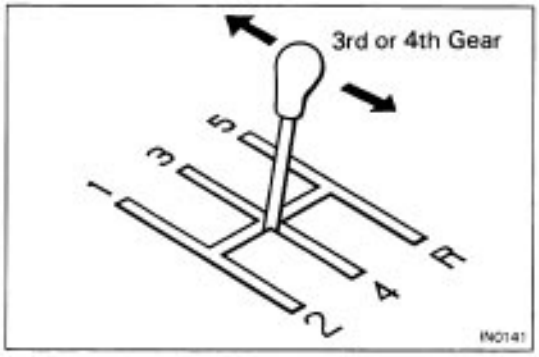

6. START ENGINE

7. PUT TRANSMISSION IN 3RD OR 4TH GEAR AND ENGAGE CLUTCH SLOWLY, THEN GRADUALLY INCREASE SPEED TO TEST SPEED

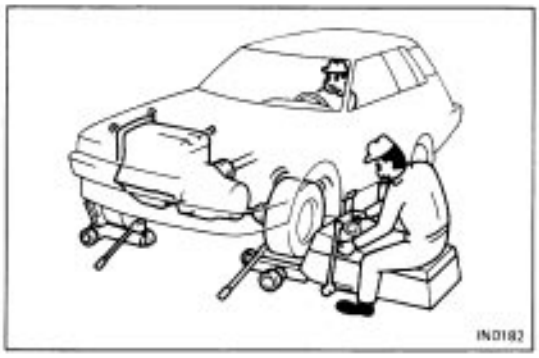

8. ROTATE WHEELS USING BOTH ENGINE'S DRIVING FORCE AND DRIVING FORCE OF WHEEL BALANCER AND CHECK WHEEL BALANCE

HINT: When doing this be careful of the other wheels, which will rotate at the same time.

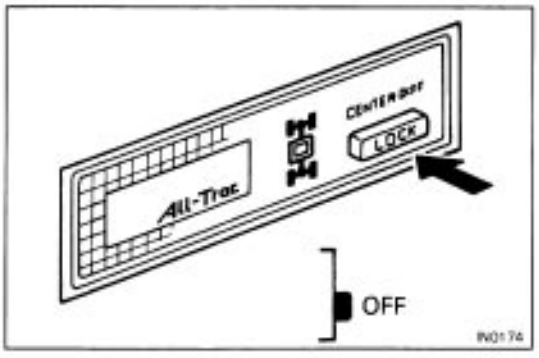

9. SET CENTER DIFFERENTIAL CONTROL SWITCH TO OFF

HINT: If the indicator light does not go off when the center differential control switch is turned off, move the vehicle backward or forward slightly and check that the indicator light goes off.

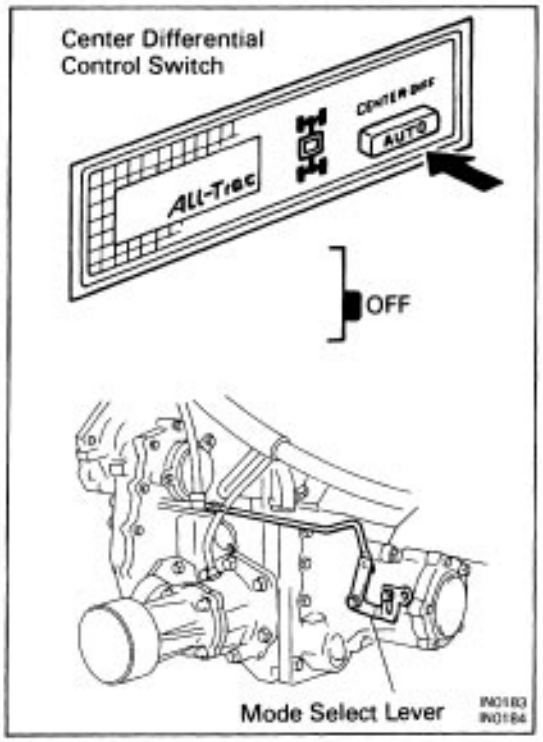

2. AUTOMATIC TRANSAXLE MODELS (Hydraulic Multiplate Clutch Control Type Center Differential)

BEFORE BEGINNING TEST

During tests with a brake tester or chassis dynamometer, such as braking force tests or speedometer tests, if only the front or the rear wheels are to be rotated, it is necessary to first set the center differential control switch to OFF (Hydraulic multiplate clutch control is released), then set the Mode Select Lever on the automatic transaxle to the FREE (Normal) Mode or to the LOCK
Mode depending on the type of test being performed.

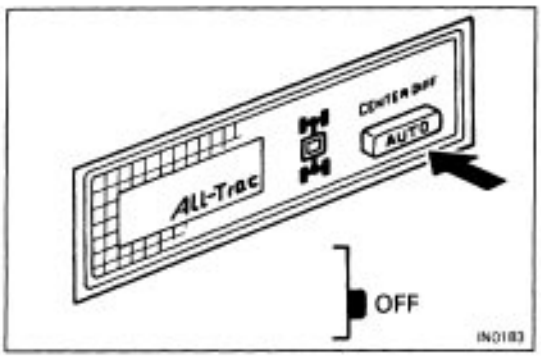

1. Release Hydraulic Multiplate Clutch Control of Center Differential

1. SET CENTER DIFFERENTIAL CONTROL SWITCH TO OFF AND CHECK THAT INDICATOR LIGHT GOES OFF

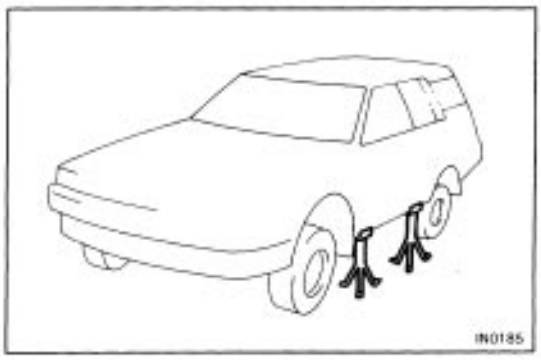

2. CHECK THAT OPERATION OF HYDRAULIC MULTIPLATE CLUTCH CONTROL IS IN "OFF" CONDITION

(1) Jack up the vehicle so that all four wheels can rotate.

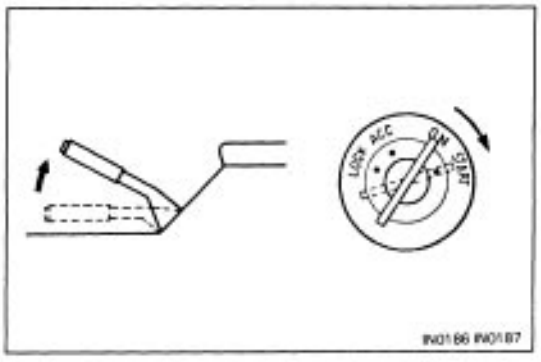

(2) Apply the parking brake.
(3) Start the engine and run it at idle speed.
When the engine speed is high, warm–up the engine, then run it at idle speed.

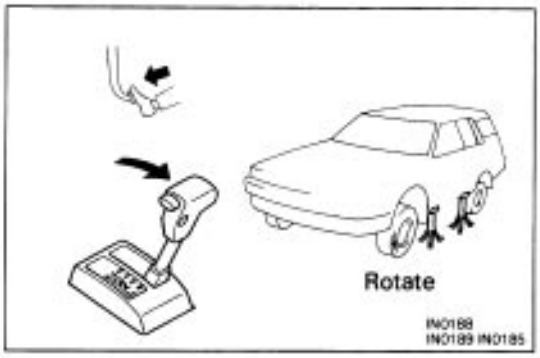

(4) Depress the brake pedal, shift into L range and gradually release the brake pedal.
(5) Check that the front wheels begin to rotate and that the rear wheels do not rotate.

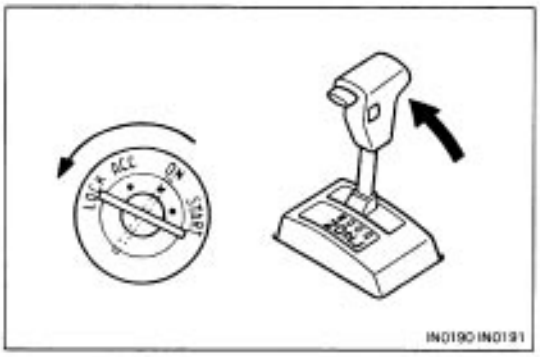

(6) Stop the engine and put the transmission in N range.

2. Moving Mode Select Lever

1. JACK UP VEHICLE

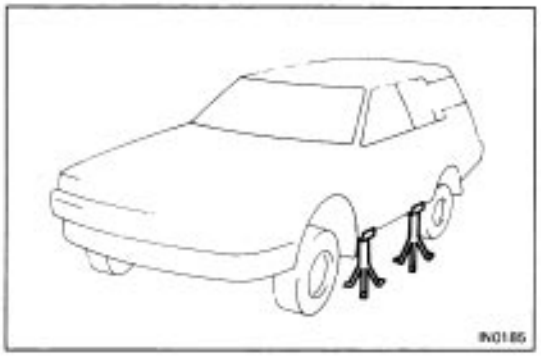

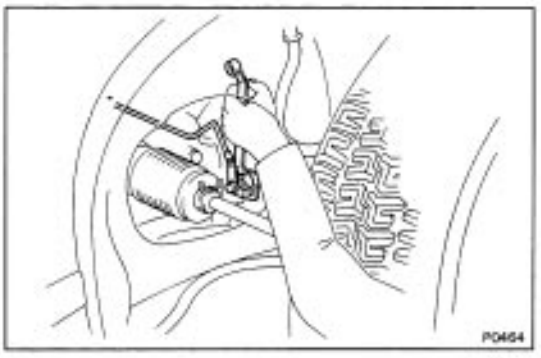

2. LOOSEN MODE SELECT LEVER LOCK BOLT

3. MOVE MODE SELECT LEVER TO DESIRED MODE POSITION

While rotating one front wheel by hand, shift the select lever towards the LOCK mode or FREE mode.

HINT: Do not use excessive force when moving the mode select lever.



4. AFTER MAKING SHIFT, LOCK MODE SELECT LEVER SECURELY WITH BOLT

HINT: Be sure to tighten the lock bolt securely each time after moving the mode select lever.

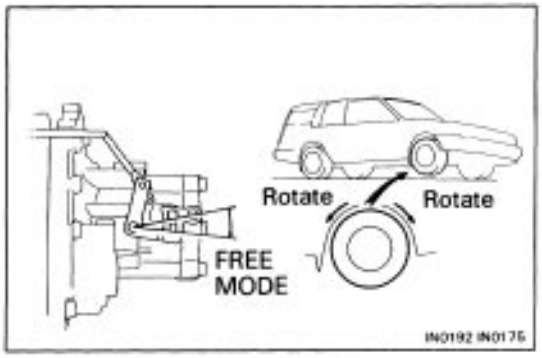

5. CONFIRM MODE

FREE (Normal) Mode:

A lifted wheel can be rotated even if only one wheel is lifted up, as long as transmission is in N range.

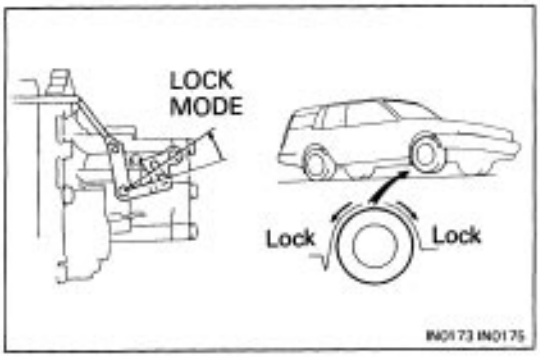

LOCK Mode:

A lifted wheel cannot be rotated if only one wheel is lifted up, even if transmission is i n N range.

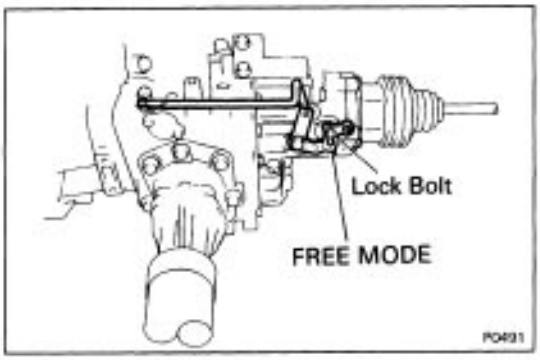

6. AFTER FINISHING TEST, RETURN MODE SELECT LEVER TO ”FREE (NORMAL) MODE” POSITION AND LOCK SELECT LEVER SECURELY WITH BOLT

7. SET CENTER DIFFERENTIAL CONTROL SWITCH TO AUTO

CAUTIONS WHEN MODE SELECT LEVER IS IN ”FREE” OR ”LOCK” MODE

FREE MODE

(1) Do not drive off suddenly or apply the accelerator or brakes suddenly. Always start slowly and decelerate gradually.

(2) If either the front or the rear wheels are placed on the tester rollers in the FREE mode, be careful not to exceed the following limits:

Maximum speed:

Speed indicated on speedometer 19 mph(30 km/h) or

Wheel speed (Tester speed) 38 mph(60 km/h)

Maximum test time: 60 sec.

Note that the actual wheel speed (tester speed) is twice the speed indicated by the speedometer due to center differential operation.

LOCK MODE

(1) Do not drive off suddenly or apply the accelerator or brakes suddenly. Always start slowly and decelerate gradually.

(2) Be sure to conduct the test with the rear propeller shaft removed.

BRAKING FORCE TEST

HINT: According to the vehicle speed during the test, select one of the two test methods described below, either A or B.
Method A : Conduct the test with the center differen–
(Low Speed Test) tial control switch off and the select lever on the transaxle in the FREE (Normal)
mode.
Method B : Conduct the test with the center differen–
(High Speed Test) tial control switch off, the select lever on the transaxle in the LOCK mode and the rear propeller shaft removed.

TEST METHOD A (Low Speed Test)

Speed indicated on speedometer:
Below 19 mph (30 km/h)
Wheel speed (tester speed):
Below 38 mph (60 km/h)
Test time: Within 60 sec.

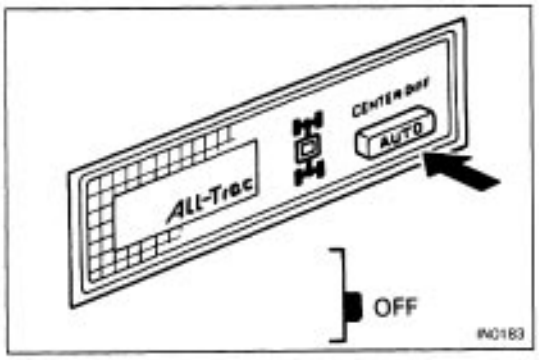

1. SET CENTER DIFFERENTIAL CONTROL SWITCH TO OFF

(1) Check that the center differential control indicator light goes off.
(2) Further check that operation of hydraulic multiplate clutch control of center differential is in OFF condition
(See page IN–15).

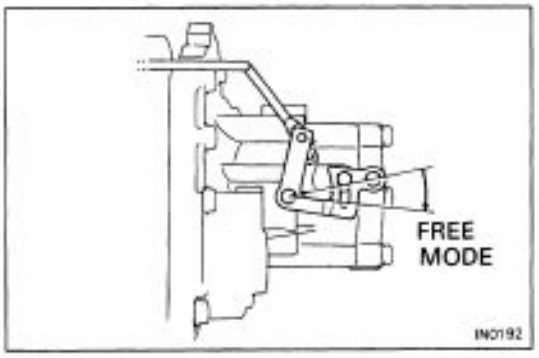

2. MOVE MODE SELECT LEVER ON TRANSAXLE TO FREE (NORMAL) MODE AND LOCK SELECT LEVER SECURELY WITH BOLT (See page IN–16)

HINT: During normal driving conditions select lever is already in FREE mode so there is no need to change it.

3. CONFIRM MODE SELECTION (See page IN–17)

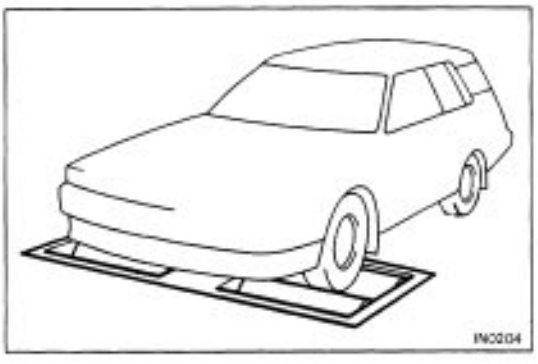

4. PLACE WHEELS (EITHER FRONT OR REAR) TO BE TESTED ON TESTER ROLLERS

HINT: The actual wheel speed (tester speed) is twice the speed indicated by the speedometer due to center differential operation.

5. DISCONNECT INERTIA WEIGHT FROM TESTER ROLLER (If equipped with it)

6. PUT TRANSMISSION IN N RANGE

7. OPERATE TESTER ROLLERS AND MEASURE BRAKING FORCE WITH ENGINE AT IDLE

HINT: Since different types of tester are used, such as specialized brake testers and combination testers with built in chassis dynamometer, speedometer tester, brake tester, etc., conduct the test in accordance with the instructions furnished for the tester model used.

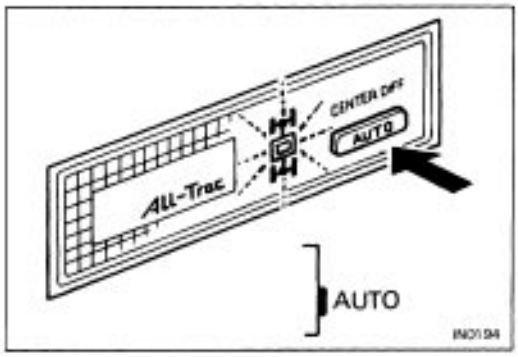

8. AFTER FINISHING TEST, RETURN CENTER DIFFERENTIAL CONTROL SWITCH TO "AUTO" AND CHECK THAT INDICATOR LIGHT GOES ON

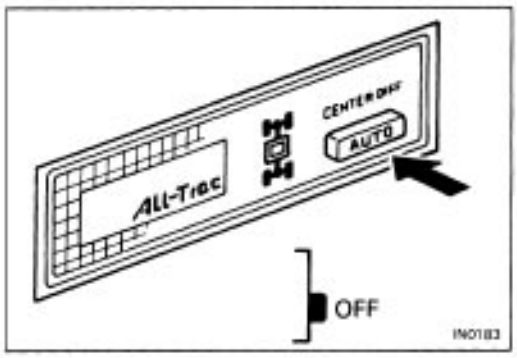

TEST METHOD B (High Speed Test)

[Vehicle speed: Over 38 mph (60 km/h)]

1. SET CENTER DIFFERENTIAL CONTROL SWITCH TO OFF

(1) Check that the center differential control indicator light goes off.

(2) Further check that the operation of the hydraulic multiplate clutch control of the center differential is in OFF condition.
(See page IN–15)

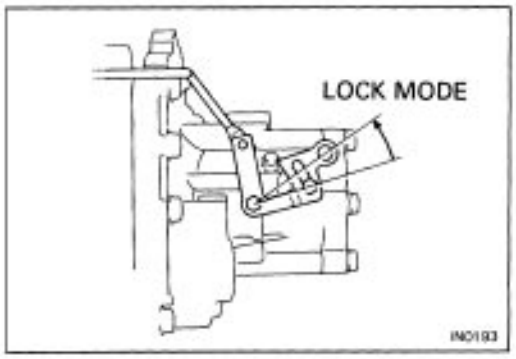

2. MOVE MODE SELECT LEVER ON TRANSAXLE TO "LOCK" MODE AND LOCK IT SECURELY WITH BOLT (See page IN–16)

3. CONFIRM MODE SELECTION (See page IN–17)

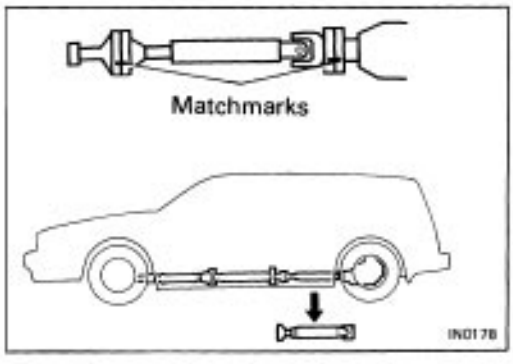

4. REMOVE REAR PROPELLER SHAFT

Make matching marks on each end of the propeller shaft, then remove it.

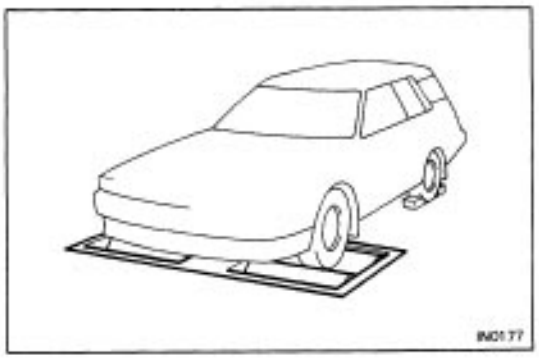

5. PLACE WHEELS (EITHER FRONT OR REAR) TO BE TESTED ON TESTER ROLLERS

6. CHOCK OTHER WHEELS

7. DISCONNECT INERTIA WEIGHT FROM TESTER ROLLER (If equipped with it)

8. PUT TRANSMISSION IN N RANGE

9. OPERATE TESTER ROLLERS AND MEASURE BRAKING FORCE WITH ENGINE AT IDLE

HINT: Since different types of tester are used, such as specialized brake testers and combination testers with built in chassis dynamometer, speedometer tester, brake tester, etc., conduct the test in accordance with the instructions furnished for the tester in use.

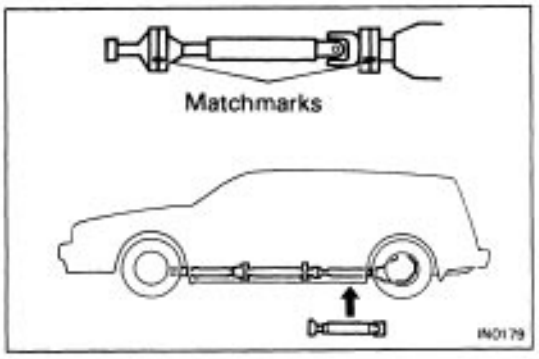

10. AFTER FINISHING TEST, INSTALL REAR PROPELLER SHAFT

Align the matching marks made on the rear propeller shaft before removal, then install it.

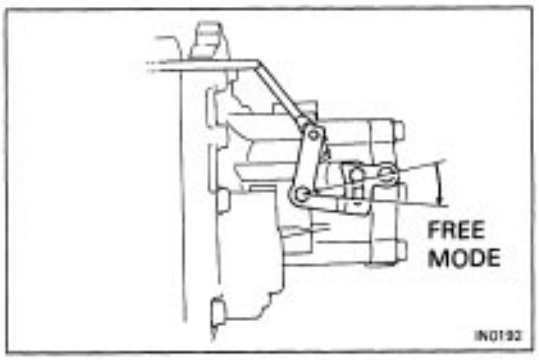

11. RETURN MODE SELECT LEVER TO "FREE (NORMAL) MODE" POSITION AND LOCK IT SECURELY WITH BOLT

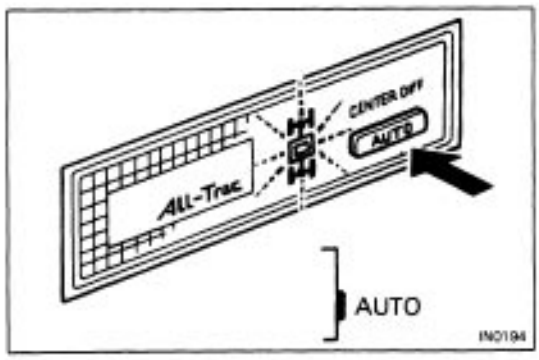

12. SET CENTER DIFFERENTIAL CONTROL SWITCH TO AUTO

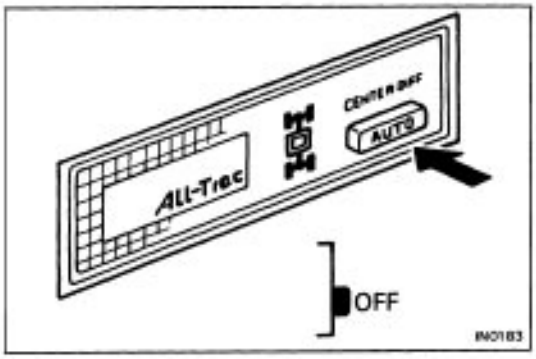

SPEEDOMETER TEST OR OTHER TESTS

[Using Speedometer Tester or Chassis Dynamometer]

7. SET CENTER DIFFERENTIAL CONTROL SWITCH TO OFF

(1) Check that the center differential control indicator light goes oft.

(2) Further check that the operation of the hydraulic multi-plate clutch control of the center differential is in OFF condition.

(See page IN–15)

2. MOVE MODE SELECT LEVER ON TRANSAXLE TO "LOCK" MODE AND LOCK IT SECURELY WITH BOLT

(See page IN–16)

3. CONFIRM MODE SELECTION

(See page IN–17)

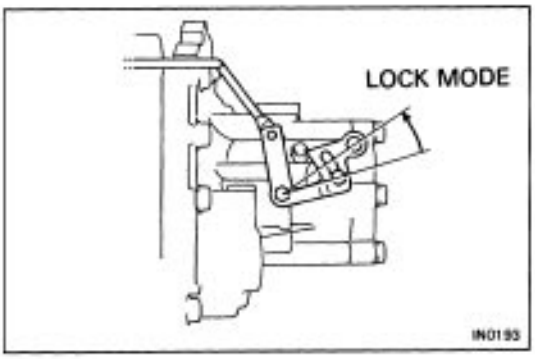

4. REMOVE REAR PROPELLER SHAFT

Make matching marks on each end of the rear propeller shaft, then remove it.

5. PLACE FRONT WHEELS ON TESTER ROLLERS

6. CHOCK REAR WHEELS

7. APPLY PARKING BRAKE

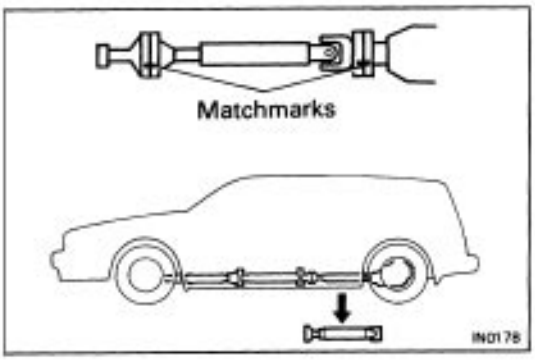

8. DISCONNECT INERTIA WEIGHT FROM TESTER

ROLLER (If equipped with it)

9. TEST VEHICLE

(1) Start the engine.

(2) Put the transmission in D range, then gradually increase the speed as the test in conducted.

(3) After the test is finished, reduce the speed gradually and stop the engine.

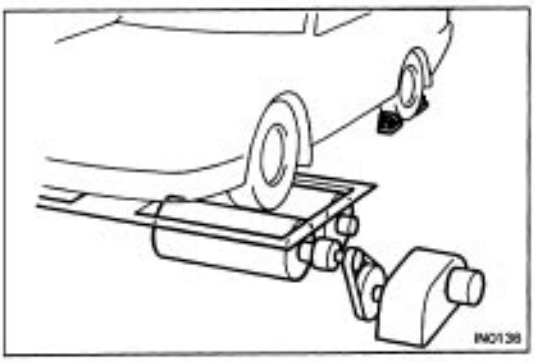

10. AFTER FINISHING TEST, INSTALL REAR PROPELLER SHAFT

Align the matching marks made on the rear propeller shaft before removal, then install it.

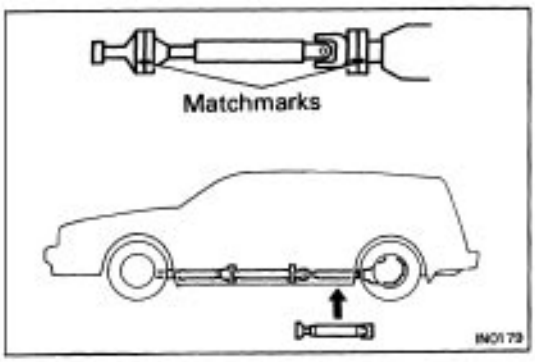

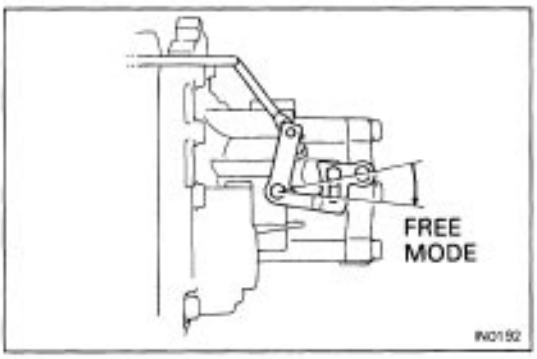

11. RETURN MODE SELECT LEVER TO "FREE (NORMAL) MODE" POSITION AND LOCK IT SECURELY WITH BOLT

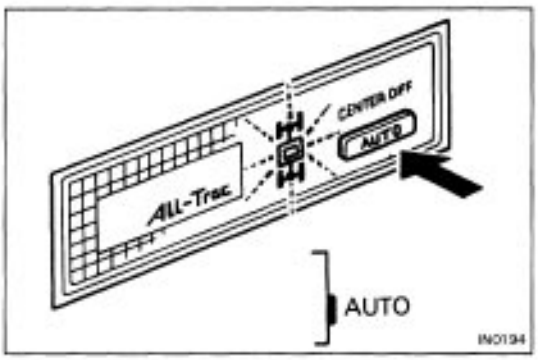

12. SET CENTER DIFFERENTIAL CONTROL SWITCH TO AUTO

ON–VEHICLE WHEEL BALANCING

NOTICE:

1. When doing on–vehicle wheel balancing on a fulltime 4WD vehicle, to prevent the wheels from rotating at different speeds or in different directions from each other (which could lead to damage to the center differential or transaxle gears), always be sure to observe the following precautions:

(1) All four wheels should be jacked up, completely clear the ground.

(2) The wheels should be driven by both the engine and the wheel balancer.

(3) The center differential control switch should be in the OFF condition.

(4) The mode select lever on the transaxle should be in the LOCK position.

(5) The parking brake lever should be fully released.

(6) None of the brakes should be allowed to drag.

2. Avoid sudden acceleration, deceleration and braking.

3. Carry out the wheel balancing with the transmission in D range.

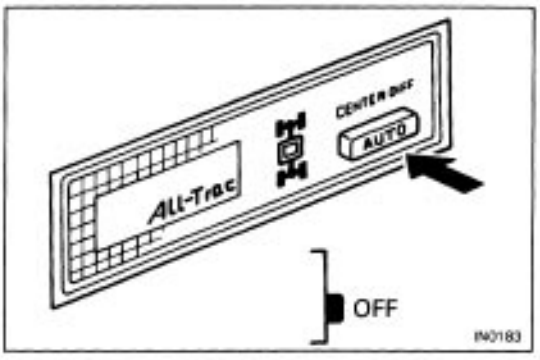

1. SET CENTER DIFFERENTIAL CONTROL SWITCH TO OFF

(1) Check that the center differential control indicator light goes off.

(2) Further check that hydraulic multiplate clutch control of the center differential is in OFF condition.
(See page IN–15)

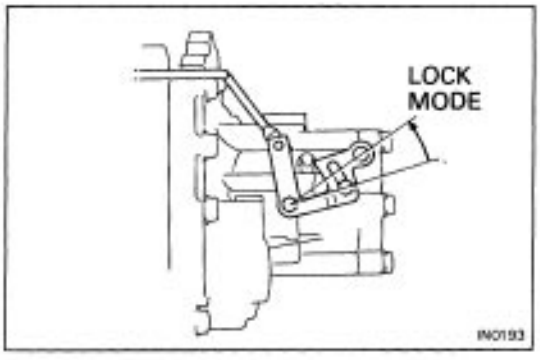

2. MOVE MODE SELECT LEVER ON TRANSAXLE TO "LOCK" MODE AND LOCK IT SECURELY WITH BOLT (See page IN–16)

3. CONFIRM MODE SELECTION (See page IN–17)

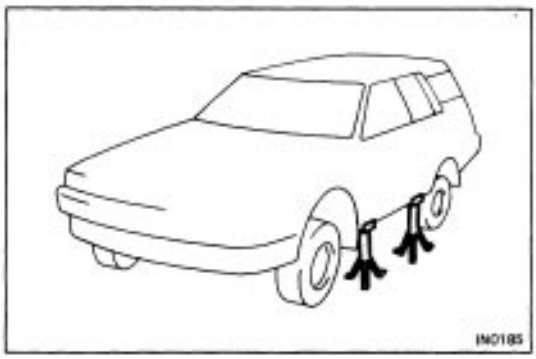

4. JACK UP VEHICLE SO THAT ALL FOUR WHEELS CAN ROTATE

The wheels will be rotating fast, so make sure the vehicle is firmly supported on stands.

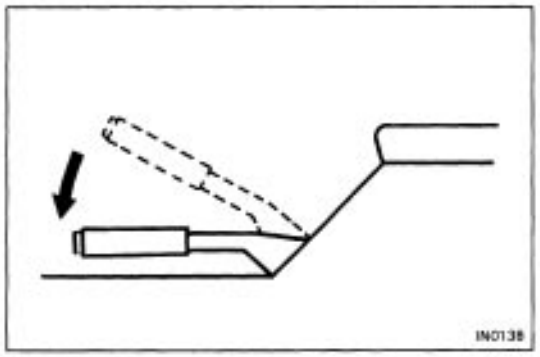

5. RELEASE PARKING BRAKE FULLY

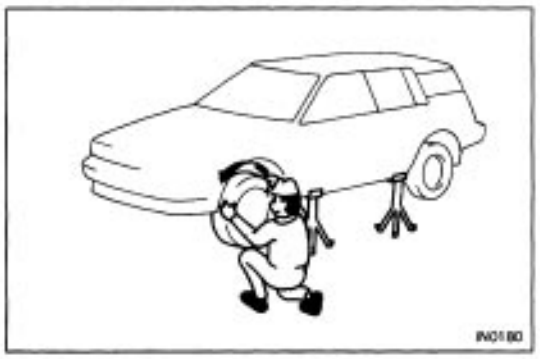

6. MAKE SURE THAT BRAKES ARE NOT DRAGGING ON ANY OF FOUR WHEELS

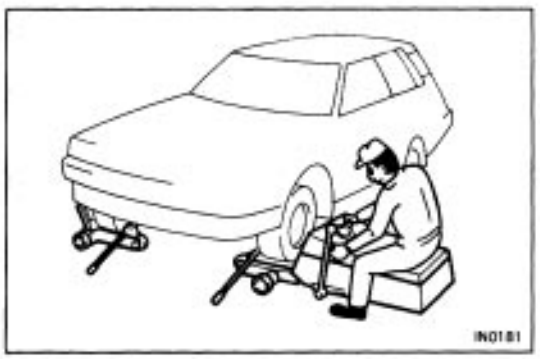

7. PLACE WHEEL TO BE BALANCED ON WHEEL BALANCER

Follow the procedure specified by the wheel balancer manufacturer.

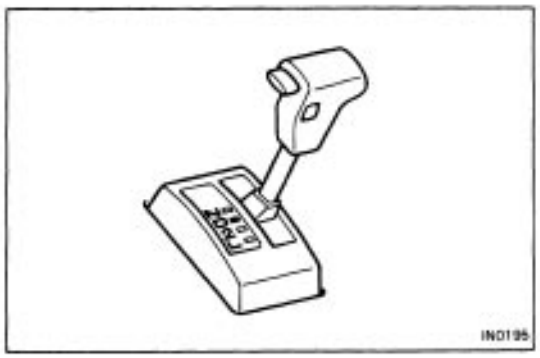

8. START ENGINE

9. PUT TRANSMISSION IN D RANGE, THEN GRADUALLY INCREASE SPEED TO TEST SPEED

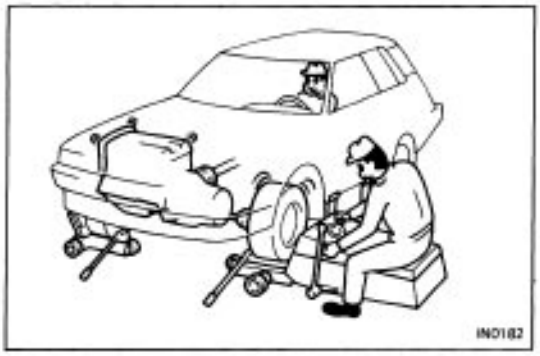

10. ROTATE WHEELS USING BOTH THE ENGINE'S DRIVING FORCE AND DRIVING FORCE OF WHEEL BALANCER AND CHECK WHEEL BALANCE

HINT:

1. when doing this be careful of the other wheel which will rotate at the same time.
2. Complete the measurement quickly, within a short time.

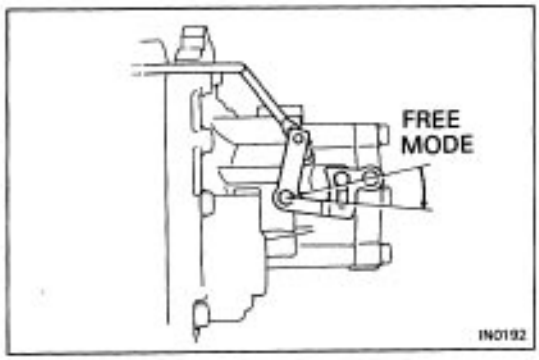

11. AFTER FINISHING WHEEL BALANCING, RETURN MODE SELECT LEVER TO "FREE (NORMAL) MODE" POSITION AND LOCK IT SECURELY WITH BOLT

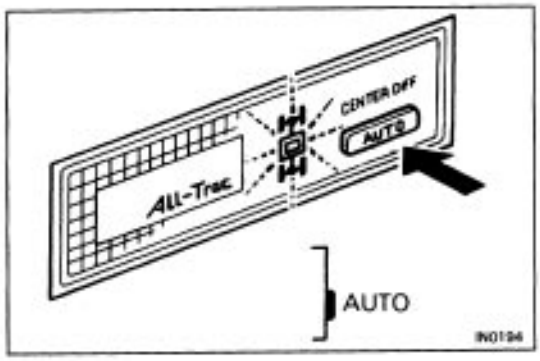

12. SET CENTER DIFFERENTIAL CONTROL SWITCH TO AUTO

PRECAUTIONS WHEN TOWING FULL–TIME 4WD VEHICLES

1. Use one of the methods shown below to tow the vehicle.
2. When there is trouble with the chassis and drivetrain, use method (1) (flat bed truck) or method (2) (sling type toe truck with dollies)
3. Recommended Methods: No. (1), (2) or (3)
   Emergency Method: No. (4)

Type of Transaxle / Towing Method	Manual Transaxle			Automatic Transaxle			
	Parking Brake	T/M Shift Lever Position	Center Diff.	Parking Brake	T/M Shift Lever Position	Center Diff. Control Switch	Mode Select Lever on Transaxle
① Flat Bed Truck 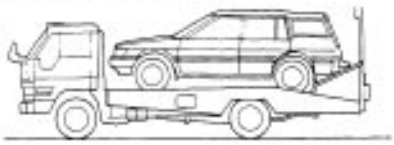 IN0196	Applied	1st Gear	Free or Lock Center Differential Control Switch "ON" or "OFF"	Applied	"P" range	"AUTO" or "OFF"	Free (Normal Driving) No Special Operation Necessary
② Sling-Type Tow Truck with Dollies 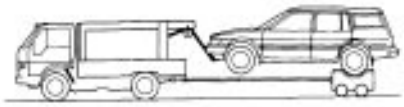 IN0197							
③ Sling-Type Two Truck (Front wheels must be able to rotate freely) 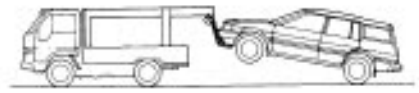 IN0198	Released	Neutral	Free Center Differential Control Switch "OFF"	Release	"N" range	,.OFF"	↑
④ Towing with a Rope 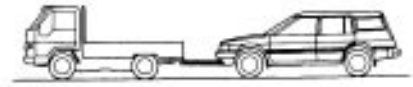 IN0199	Released	Neutral	Free Center Differential Control Switch "OFF"	Released	"N" range	"OFF"	↑
				HINT: Do not tow the vehicle at a speed faster than 18 mph (30 km/h) or a distance greater than 50 miles (80 km).			

HINT: Do not use any towing methods other than those shown above.

For example, the towing method shown below is dangerous, so do not use it.


IN0200

During towing with this towing method, there is a danger of the drivetrain heating up and causing breakdown, or of the front wheels flying off the dolly.

VEHICLE LIFT AND SUPPORT LOCATIONS

AE92 series (2WD)

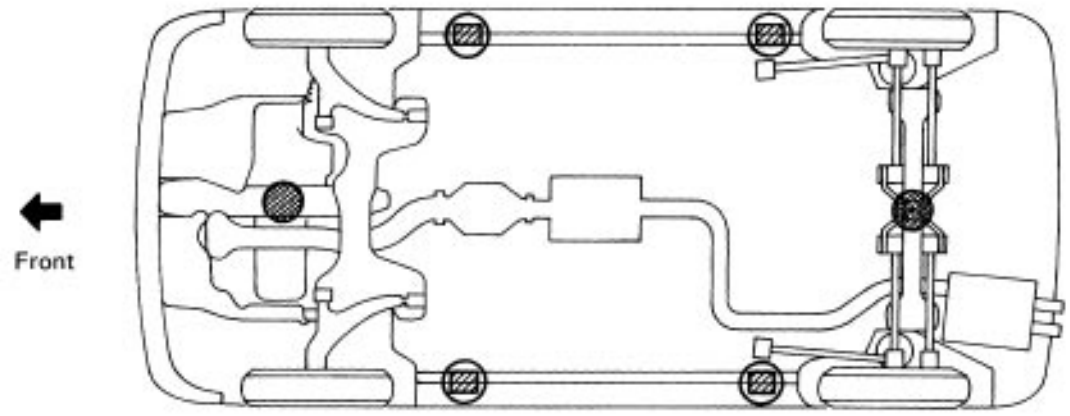

AE95 series (4WD)

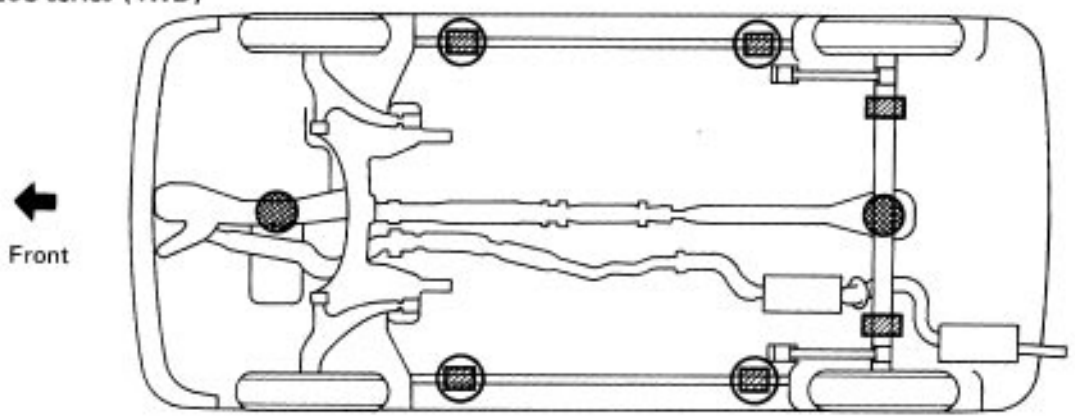

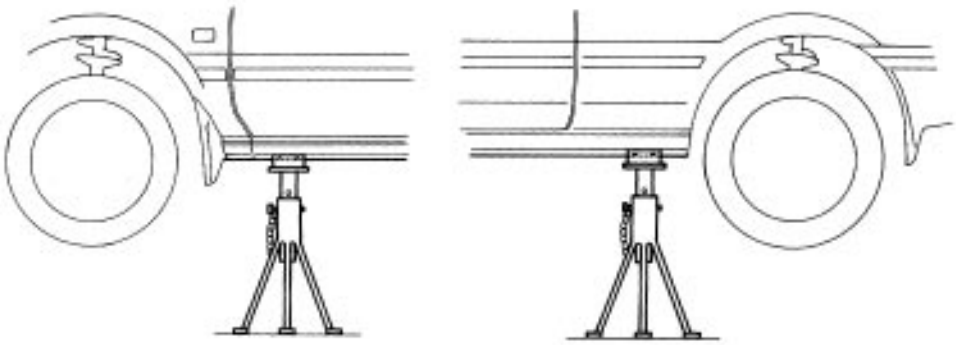

JACK POSITION

Front .... Center of engine mounting center member

Rear .... Rear subframe (AE92 series)
Jack up support of rear axle housing (AE95 series)

PANTOGRAPH JACK POSITION

SUPPORT POSITION

Safety stand .....

IN0118
IN0162
IN0120 IN0121

ABBREVIATIONS USED IN THIS MANUAL

A/C	Air Conditioner
Approx.	Approximately
A/T, AT	Automatic Transaxle
ATF	Automatic Transmission Fluid
B1	Second Coast Brake
B2	Second Brake
B3	First and Reverse Brake
B4	Underdrive Brake
BTDC	Before Top Dead Center
BVSV	Bimetal Vacuum Switching Valve
C1	Forward Clutch
C2	Direct Clutch
C3	Underdrive Clutch
Calif.	California
CB	Circuit Breaker
DEF	Defogger
DP	Dash Pot
ECU	Electronic Controlled Unit
EFI	Electronic Fuel Injection
EIG	Engine
EGR	Exhaust Gas Recirculation
ELR	Emergency Locking Retractor
ESA	Electronic Spark Advance
EVAP	Evaporative (Emission Control)
EX	Exhaust (Manifold, Valve)
Ex.	Except
F1	No.1 One–Way Clutch
F2	No.2 One–Way Clutch
F3	Underdrive One–Way Clutch
FIPG	Formed in Place Gasket
FL	Fusible Link
IG	Ignition
IN	Intake (Manifold, Valve)
IIA	Integrated Ignition Assembly
ISC	Idle Speed Control
J/B	Junction Block
luid	LED Light Emitting Diode
LH	Left–hand
Max.	Maximum
MP	Multipurpose
M/T	Manual Transaxle
O/D	Overdrive
O/S	Oversize
PCV	Positive Crankcase Ventilation
PS	Power Steering
P	Valve Proportioning Valve
P/W	Power Window
RH	Right–hand
SSM	Special Service Materials
SST	Special Service Tools
STD	Standard
SW	Switch
TCCS	Toyota Computer Controlled System
TDC	Top Dead Center
tor	TEMP. Temperature
T/M	Transmission
TWC	Three–Way Catalyst
U/D	Underdrive
U/S	Undersize
VSV	Vacuum Switching Valve
VTV	Vacuum Transmitting Valve
w/o	Without
2WD	Two Wheel Drive
4WD	Four Wheel Drive

LUBRICATION SYSTEM

DESCRIPTION

A fully pressurized, fully filtered lubrication system has been adopted for this engine.

4A-FE

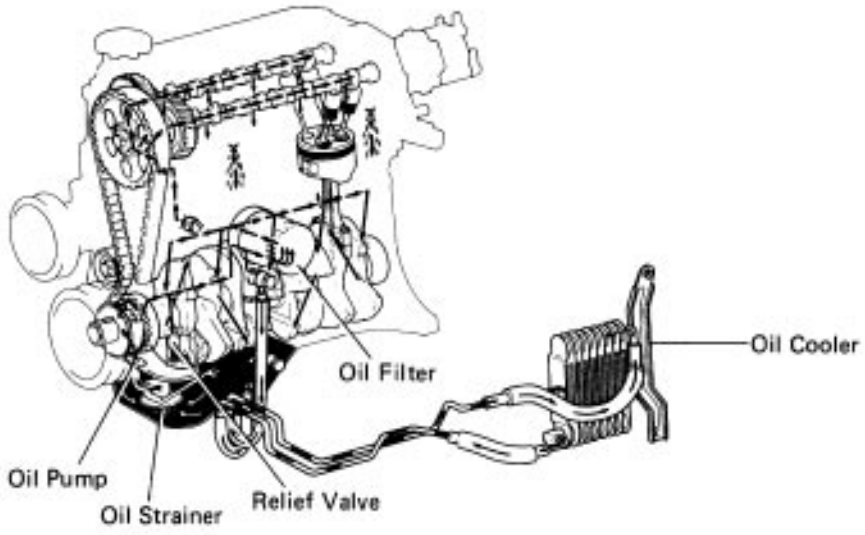

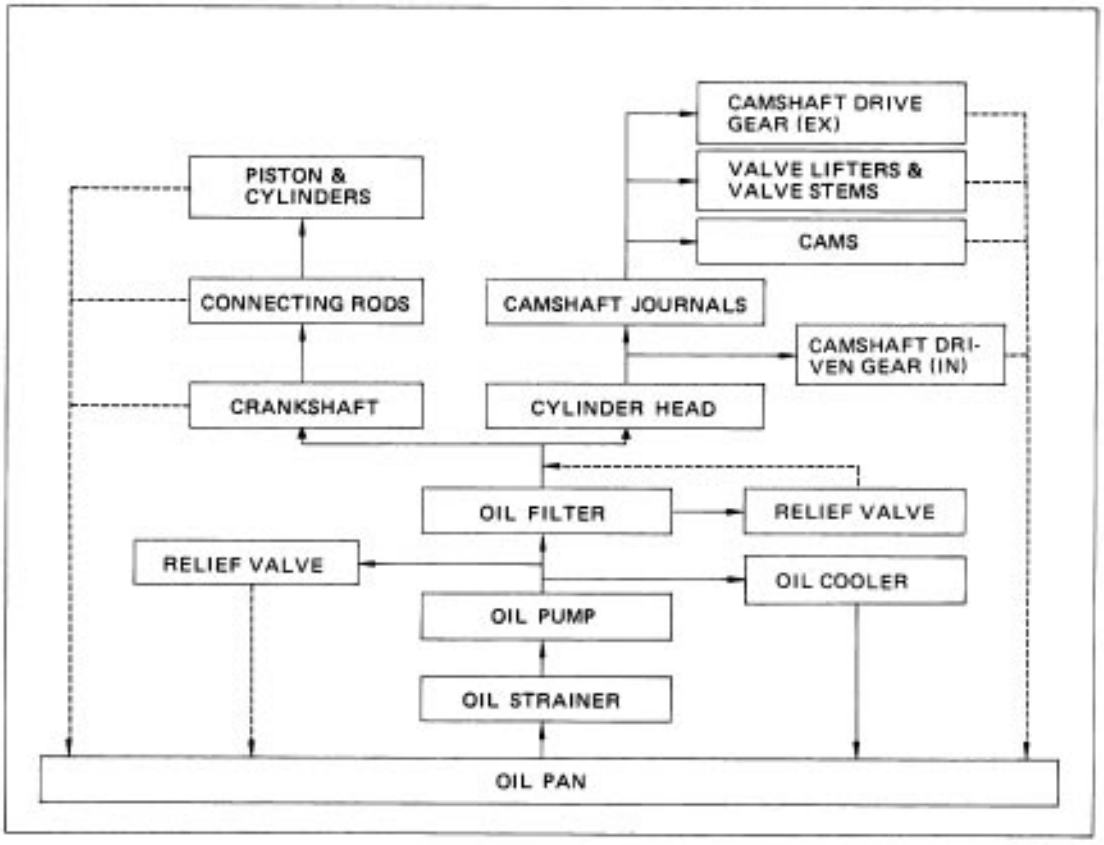

LU0780

4A-GE

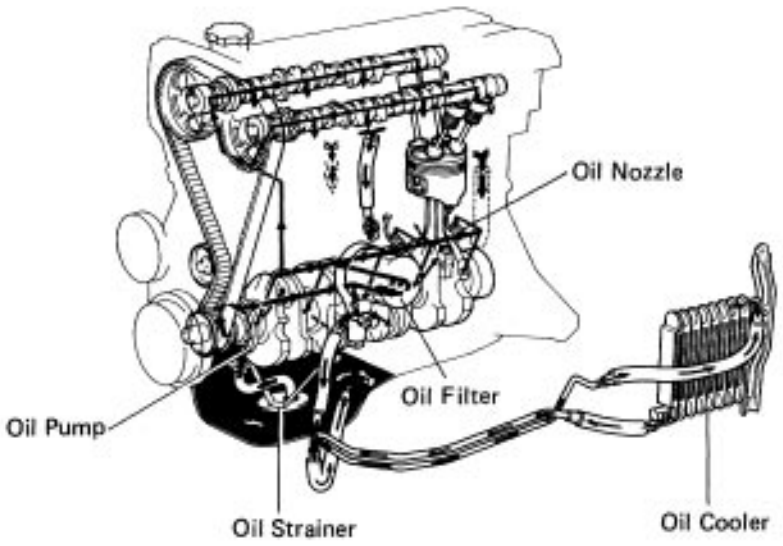
Oil Nozzle
Oil Filter
Oil Pump
Oil Strainer
Oil Cooler

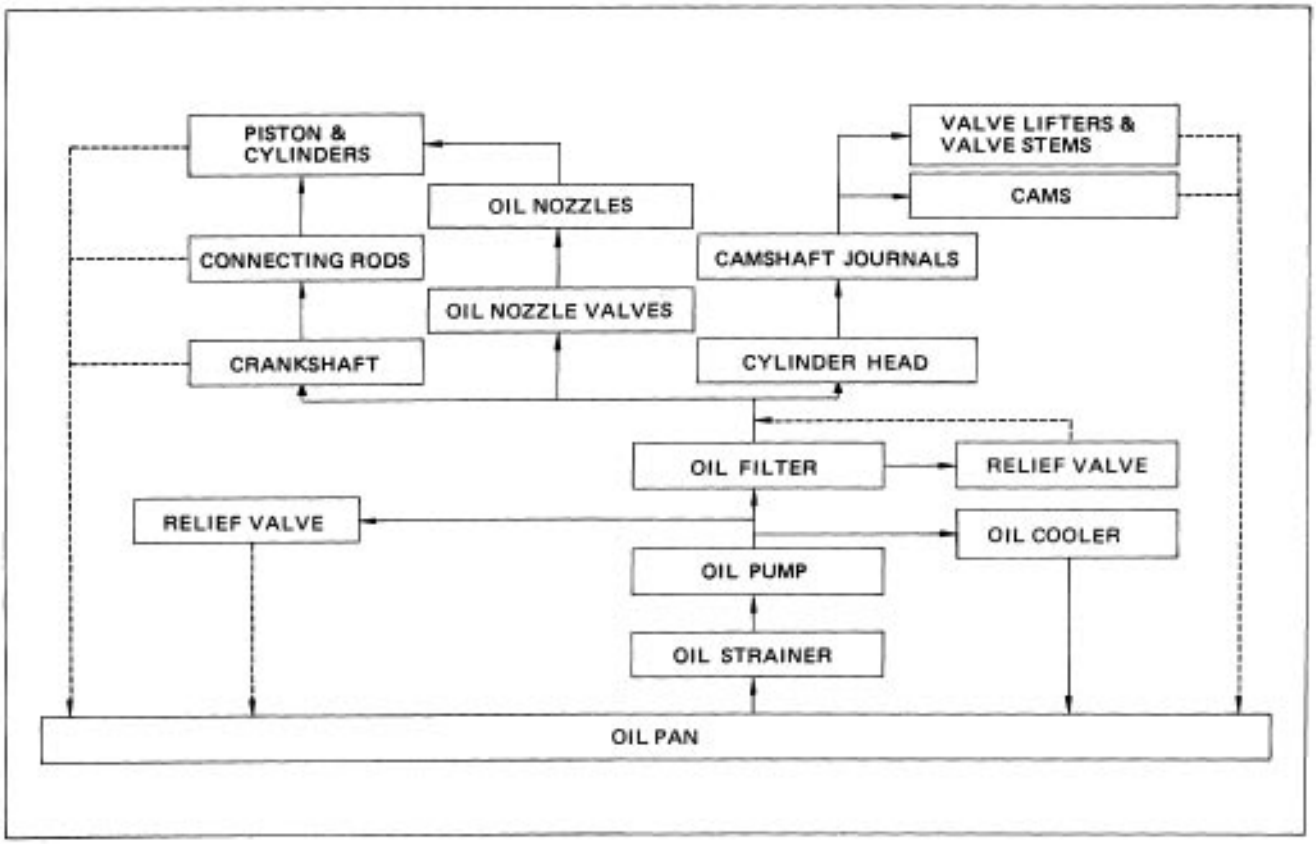
PISTON & CYLINDERS
OIL NOZZLES
VALVE LIFTERS & VALVE STEMS
CAMS
CONNECTING RODS
CAMSHAFT JOURNALS
OIL NOZZLE VALVES
CRANKSHAFT
CYLINDER HEAD
OIL FILTER
RELIEF VALVE
RELIEF VALVE
OIL COOLER
OIL PUMP
OIL STRAINER
OIL PAN

LU0836

A pressure feeding lubrication system has been adopted to supply oil to the moving parts of this engine. The lubrication system consists of an oil pan, oil pump, oil filter and other external parts which supply oil to the moving parts in the engine block. The oil circuit is shown in the illustration at the top of the previous page. Oil from the oil pan is pumped up by the oil pump. After it passes through the oil filter, it is fed through the various oil holes in the crankshaft and cylinder block. After passing through the cylinder block and performing its lubricating function, the oil is returned by gravity to the oil pan. A dip stick on the side of the oil pump body is provided to check the oil level.

OIL PUMP

The oil pump pumps up oil from the oil pan and sends it under pressure to the various parts of the engine. An oil strainer is mounted in front of the inlet to the oil pump. The oil pump itself is a trochoid type pump, inside of which is a drive rotor and a driven rotor. When the drive rotor rotates, the driven rotor rotates in the same direction, and since the axis of the driven rotor shaft is different from the center of the driven rotor, the space between the two rotors is changed as they rotate. Oil is drawn in when the space is wide and is discharged when the space in narrow.

OIL PRESSURE REGULATOR

At high engine speeds, the engine oil supplied by the oil pump exceeds the capacity of the engine to utilize it. For that reason, the oil pressure regulator works to prevent an oversupply of oil. During normal oil supply, a coil spring and valve keep the by–pass closed, but when too much oil is being fed, the pressure become extremely high, overpowering the force of the spring and opening the valves.

This allows the excess oil to flow through the valve and return to the oil pan.

OIL FILTER

The oil filter is a full flow type filter with a bulletin paper filter element. Particles of metal from wear, airborne dirt, carbon and other impurities can get in the oil during use and could cause accelerated wear or siezing if allowed to circulate through the engine.

The oil filter, integrated into the oil line, removes these impurities as the oil passes through it. The filter is mounted outside the engine to simplify replacement of the filter element. A relief valve is also included ahead of the filter element to relieve the high oil pressure in case the filter element becomes clogged with impurities. The relief valve opens when the oil pressure overpowers the force of the spring. Oil passing through the relief valve bypasses the oil filter and flows directly into the main oil hole in the engine.

TROUBLESHOOTING

Problem	Possible cause	Remedy	Page
Oil leakage	Cylinder head, cylinder block or oil pump body damaged or cracked	Repair as necessary	
	Oil seal faulty	Replace oil seal	EM–148
	Gasket faulty	Replace gasket	
Low oil pressure	Oil leakage	Repair as necessary	
	Relief valve faulty	Repair relief valve	LU–12, 14
	Oil pump faulty	Repair oil pump	LU–9
	Poor quality engine oil	Replace engine oil	LU–6
	Crankshaft bearing faulty	Replace bearing	EM–137
	Connecting rod bearing faulty	Replace bearing	EM–134
	Oil filter clogged	Replace oil filter	LU–7
High oil pressure	Relief valve faulty	Repair relief valve	LU–12, 14

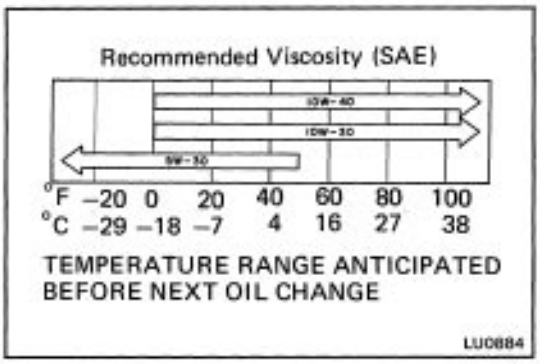

OIL PRESSURE CHECK

1. CHECK ENGINE OIL QUALITY

Check the oil for deterioration, entry of water, discoloring or thinning.

If the quality is poor, replace the oil.

Use API grade SG multigrade, fuel–efficient and recommended viscosity oil.

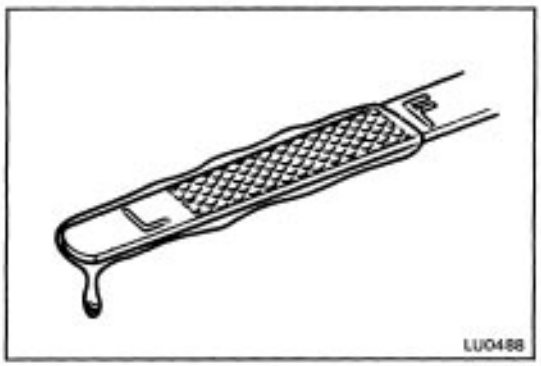

2. CHECK ENGINE OIL LEVEL

The oil level should be between the ”L” and ”F” marks on the dipstick.

If low, check for leakage and add oil up to the ”F” mark.

3. (with A/C)

REMOVE A/C, DRIVE BELT, COMPRESSOR AND BRACKET

4. (4A–GE w/ PS)

REMOVE PS, DRIVE BELT, IDER PULLEY AND PUMP BRACKET

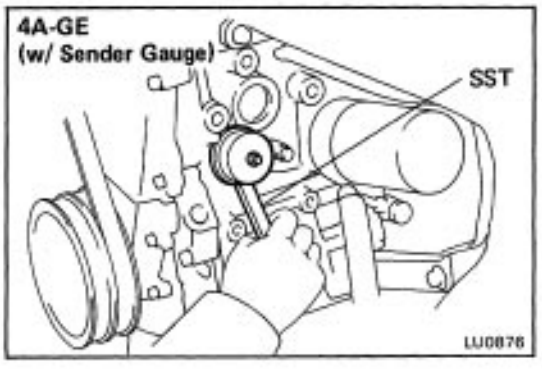

5. (4A–FE)

REMOVE DRIVE BELT, ALTERNATOR AND BRACKET

6. REMOVE OIL PRESSURE SWITCH OR SENDER GAUGE

HINT: (w/ Sender gauge): Use SST.

SST 09027–12140

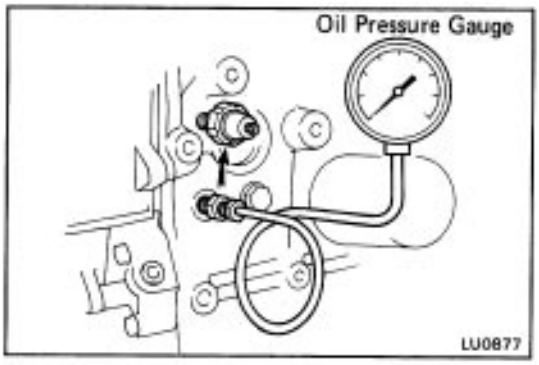

7. INSTALL OIL PRESSURE GAUGE

8. (4A–FE)

INSTALL BRACKET, ALTERNATOR AND DRIVE BELT

9. START ENGINE

Start engine and warm it up to normal operating temperature.

10. MEASURE OIL PRESSURE

Oil pressure:

At idle 0.3 kg /cm2 (4.3 psi, 29 kPa) or more

At 3,000 rpm 2.5 – 5.0 kg /cm2

(36 – 71 psi, 245 – 490 kPa)

11. REINSTALL OIL PRESSURE SWITCH OR SENDER GAUGE

Apply adhesive to two or three threads.

Adhesive: Part No.08833–00080, THREE BOND 1344, LOCTITE 242 or equivalent

12. (4A–GE w/ PS)

REINSTALL PS PUMP BRACKET, IDER PULLEY AND DRIVE BELT

13. (with A/C)

REINSTALL A/C COMPRESSOR BRACKET COMPRESSOR AND DRIVE BELT

14. ADJUST DRIVE BELTS

4A–FE (See page EM–40**)**

4A–GE (See page EM–52**)**

15. START ENGINE AND CHECK FOR LEAKS

REPLACEMENT OF ENGINE OIL AND OIL FILTER

CAUTION:

- **Prolonged and repeated contact with mineral oil will result in the removal of natural fats from the skin, leading to dryness, irritation and dermatitis. In addition, used engine oil contains potentially harmful contaminants which may cause skin cancer.**
  Adequate means of skin protection and washing facilities should be provided.
- **Care should be taken, therefore, when changing engine oil, to minimize the frequency and length of time your skin is exposed to used engine oil. Protective clothing and gloves, that cannot be penetrated by oil, should be worn. The skin should be thoroughly washed with soap and water, or use waterless hand cleaner, to remove any used engine oil. Do not use gasoline, thinners, or solvents.**
- **In order to preserve the environment, used oil must be disposed of only at designated disposal sites.**

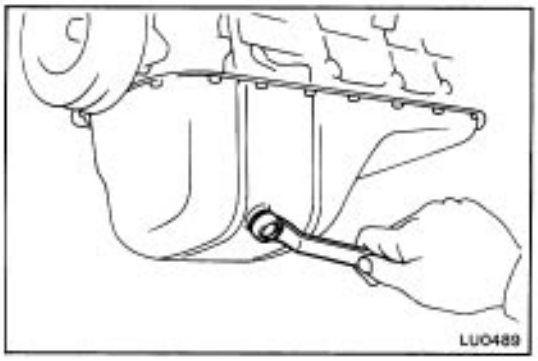

1. DRAIN ENGINE OIL

(a) Remove the oil filler cap.

(b) Remove the oil drain plug and drain the oil into a container.

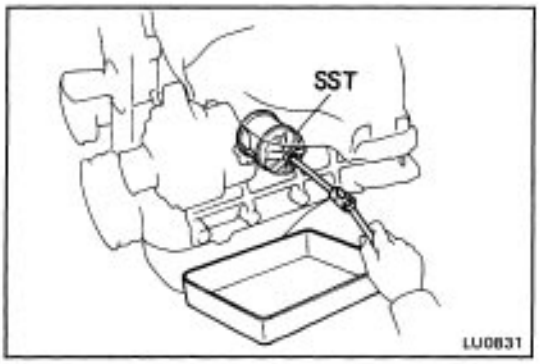

2. REPLACE OIL FILTER

(a) Using SST, remove the oil filter (located on left side of the cylinder block).
SST 09228–06500

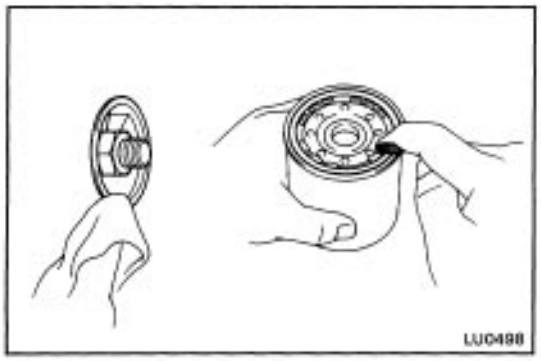

(b) Inspect and clean the oil filter installation surface.

(c) Apply clean engine oil to the gasket of anew oil filter.

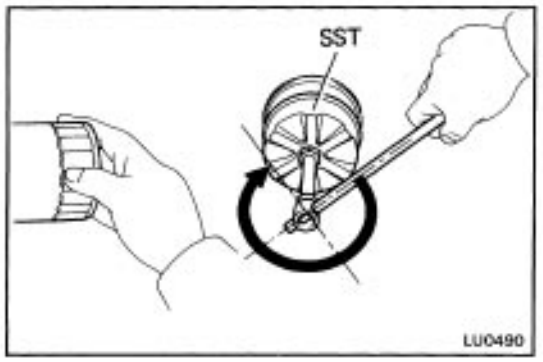

(d) Lightly screw in the filter until you feel resistance.

(e) Then, using SST, tighten the oil filter an extra 3I4 turn.
SST 09228–06500

3. REFILL WITH ENGINE OIL

(a) Clean and install the oil drain plug with a new gasket. Torque the drain plug.

Torque: 350 kg–cm (25 ft–lb, 34 N–m)

(b) Fill the engine with new oil, API grade SG multigrade, fuel–efficient and recommended viscosity oil.

Capacity:

4A–FE

Drain and refill

Without oil filter change

3.0 liters (3.1 US qts, 2.6 Imp.qts)

With oil filter change

3.2 liters (3.3 US qts, 2.8 Imp.qts)

Dry fill (w/o Oil cooler)

3.7 liters (3.9 US qts, 3.3 Imp.qts)

Dry fill (wl Oil cooler)

4.1 liters (4.3 US qts, 3.6 Imp.qts)

4A–GE

Drain and refill

Without oil filter change

3.4 liters (3.6 US qts, 3.0 Imp.qts)

With oil filter change

3.7 liters (3.9 US qts, 3.3 Imp.qts)

Dry fill

4.1 liters (4.3 US qts, 3.6 Imp.qts)

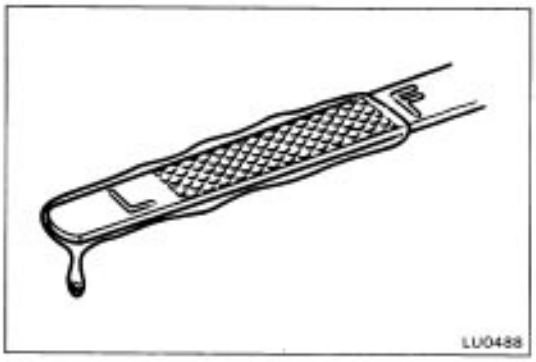

(c) Install the oil filter cap with the gasket.

4. START ENGINE AND CHECK FOR LEAKS

5. RECHECK ENGINE OIL LEVEL

Recheck the engine oil level and refill if necessary.

OIL PUMP

COMPONENTS

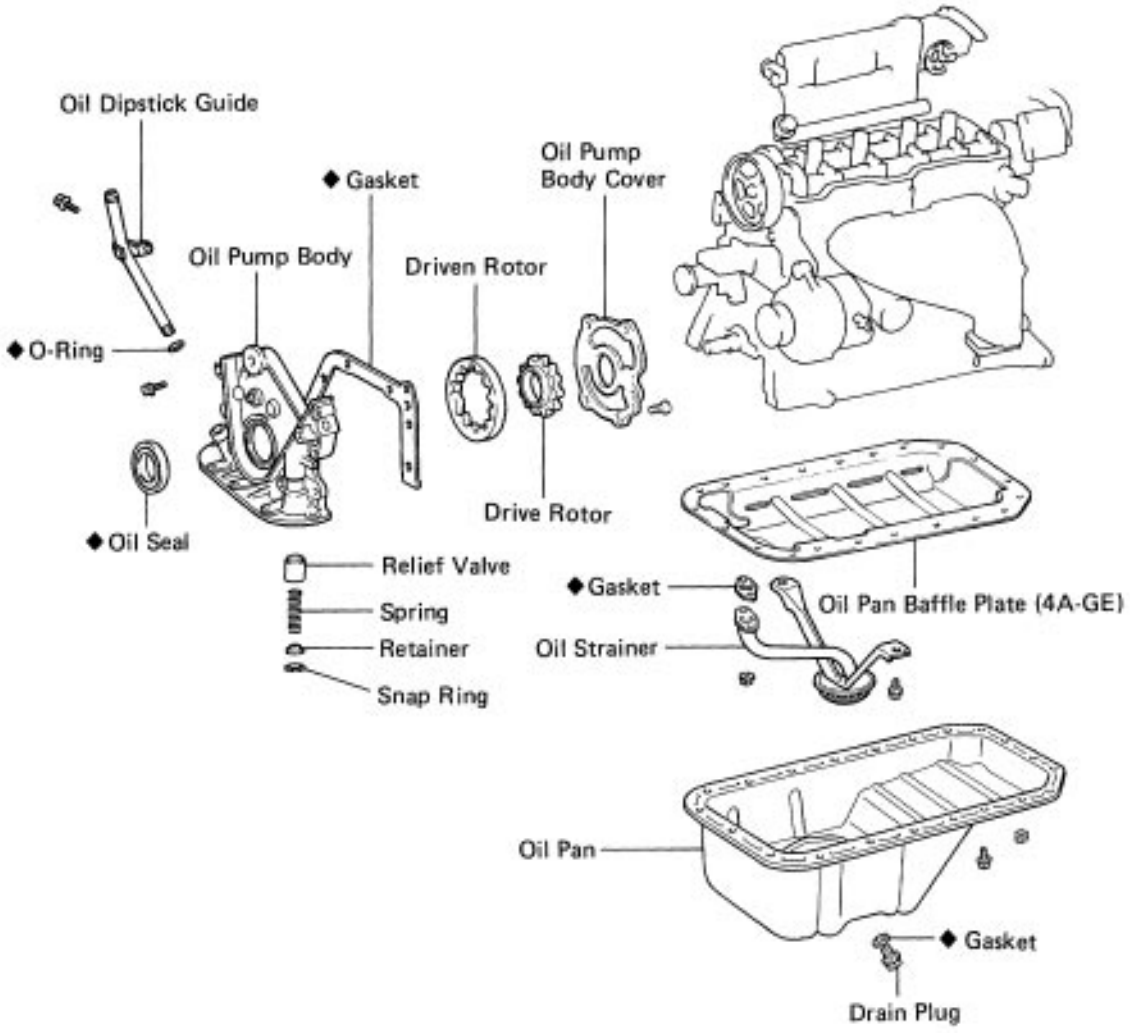

◆ Non-reusable part

LU0878

REMOVAL OF OIL PUMP

(See page LU–9)

HINT: When repairing the oil pump, the oil pan and strainer should be removed and cleaned.

1. REMOVE HOOD

2. DRAIN ENGINE OIL (See page LU–6)

3. REMOVE TIMING BELT, IDLER PULLEY AND CRANKSHAFT TIMING PULLEY

4A–FE (See steps 1 to 18 on pages EM–30 to 33)

4A–GE (See steps 1 to 17 on pages EM–41 to 45)

When remove the RH engine mounting, attach the engine hoist chain to the lifting bracket on the engine.

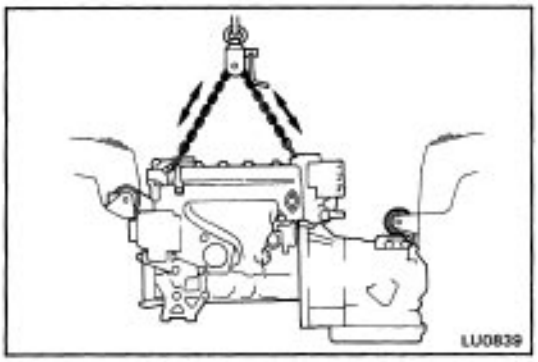

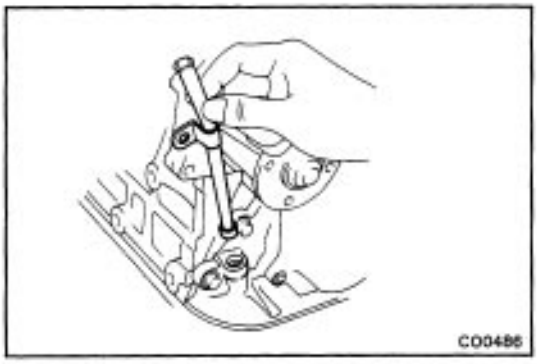

4. REMOVE OIL DIPSTICK GUIDE AND DIPSTICK

(a) Remove the dipstick.

(b) Remove the bolt, and pull out the _ dipstick guide.

(c) Remove the 0–ring from the dipstick guide.

5. REMOVE FRONT EXHAUST PIPE

4A–FE (See step 25 on page EM–121)

4A–GE (See step 24 on page EM–127)

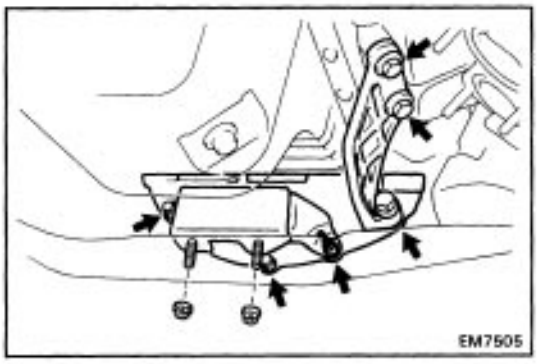

6. REMOVE CENTER MOUNTING AND STIFFENER PLATE

(a) (2WD)

Remove the bolt, three nuts and center mounting.

(b) (4A–GE)

Remove the three bolts and stiffener plate.

7. (4A–GE)

REMOVE FLYWHEEL HOUSING UNDER COVER

Remove the two bolts and under cover.

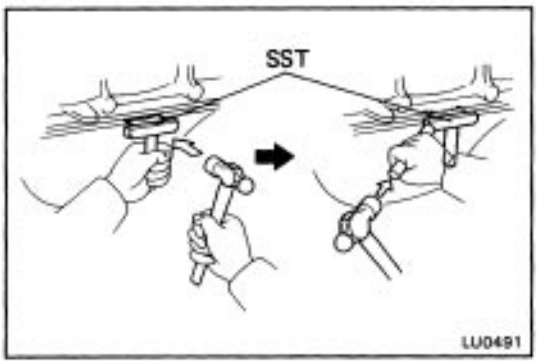

8. REMOVE OIL PAN

(a) Remove the oil cooler hose and union from the oil pan.

(b) Remove the two nuts and nineteen bolts.

(c) (4A–FE)

Insert the blade of SST between the oil pan and cylinder block, cut off applied sealer and then remove the oil pan.

SST 09032–00100

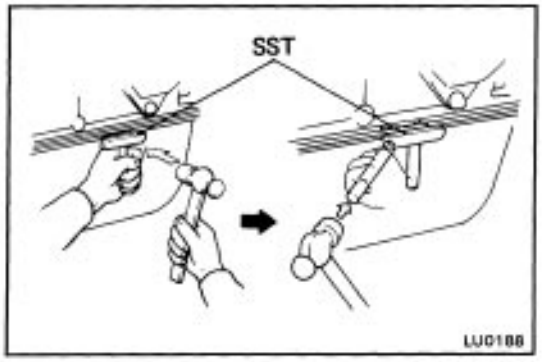

(c) (4A–G E) Insert the blade of SST between the oil pan and baffle plate, cut off applied sealer and then remove the oil pan.
SST 09032–00100

NOTICE:

- **Do not use SST for the oil pump body side. If necessary, use a screwdriver.**
- **When removing the oil pan, be careful not to damage the oil pan flange.**

9. REMOVE OIL STRAINER

Remove the two bolts, nuts, oil strainer and gasket.

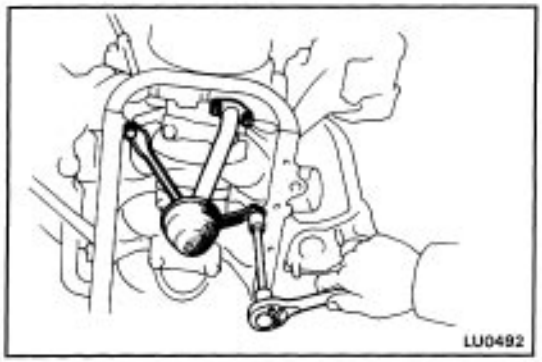

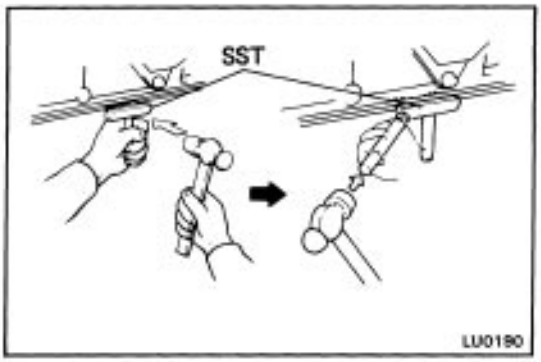

10. (4A–GE)

REMOVE OIL PAN BAFFLE PLATE

Insert the blade of SST between the cylinder block and baffle plate, cut off applied sealer and remove the baffle plate.
SST 09032–00100

NOTICE:

- **Do not use SST for the oil pump body side. If necessary, use a screwdriver.**
- **When removing the baffle plate, be careful not to damage the oil pan flange.**

11. REMOVE OIL PUMP

(a) Remove the seven bolts.

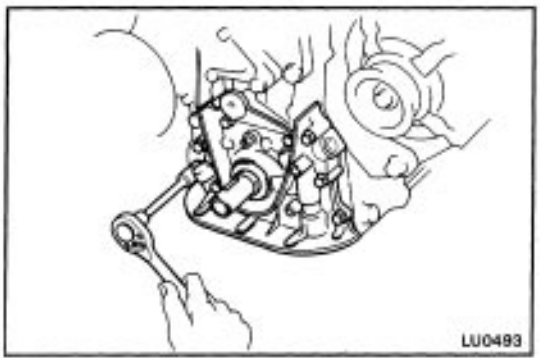

(b) Using a plastic hammer, carefully tap the oil pump body.

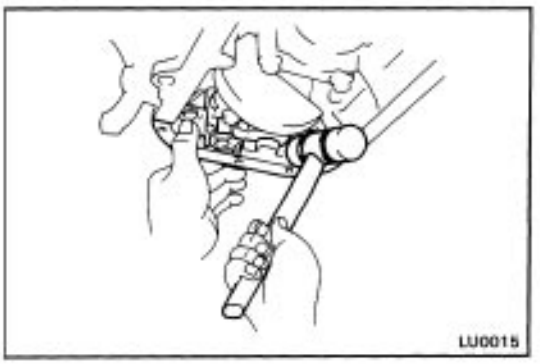

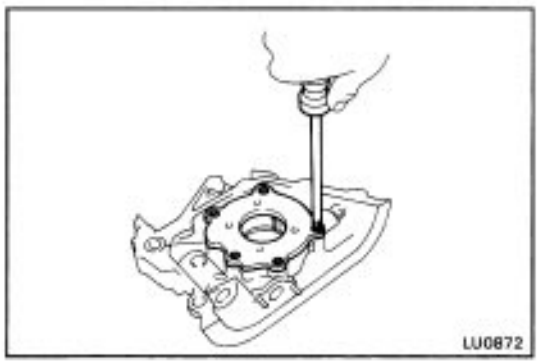

DISASSEMBLY OF OIL PUMP

(See page LU–9)

1. REMOVE DRIVE AND DRIVEN GEARS

(a) Remove the five screws and oil pump cover.

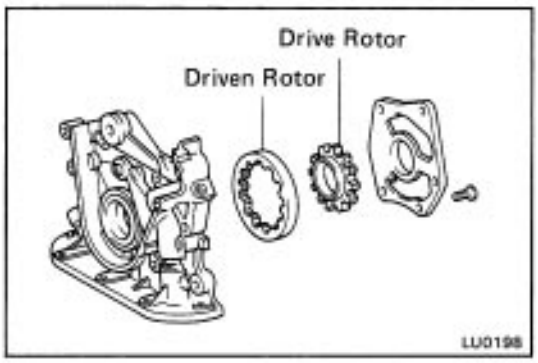

(b) Remove the drive and driven rotors.

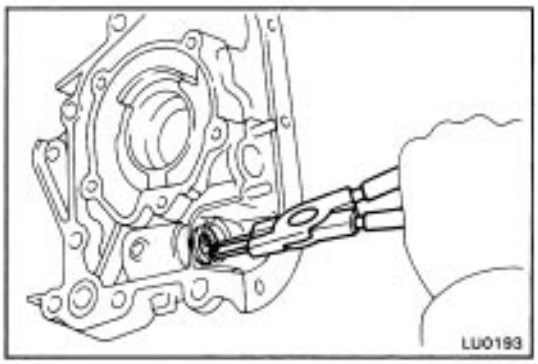

2. REMOVE RELIEF VALVE

(a) Using snap ring pliers, remove the snap ring.

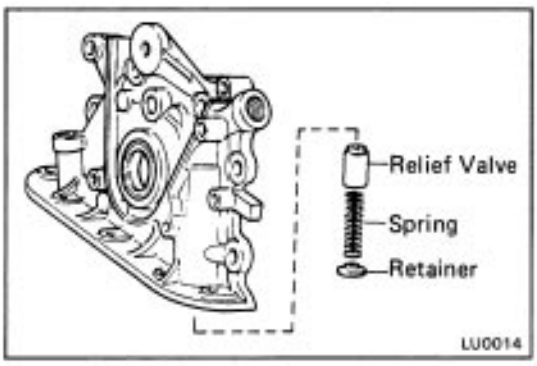

(b) Remove the retainer, spring and relief valve.

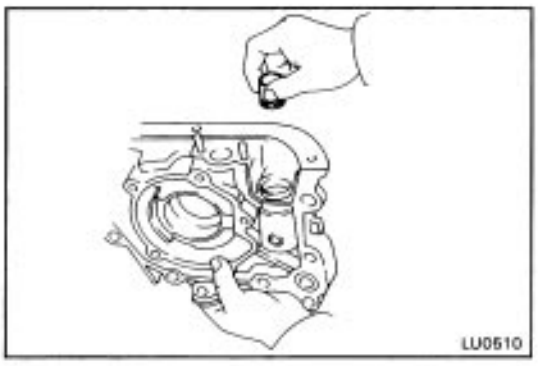

INSPECTION OF RELIEF PUMP

INSPECT RELIEF VALVE

Coat the relief valve with engine oil and check that it falls smoothly into the valve hole by its own weight. If it does not, replace the relief valve. If necessary, replace the oil pump assembly.

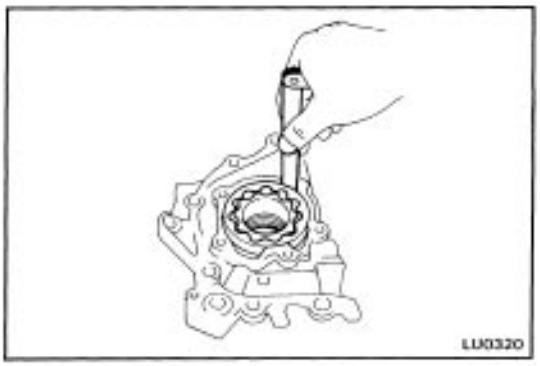

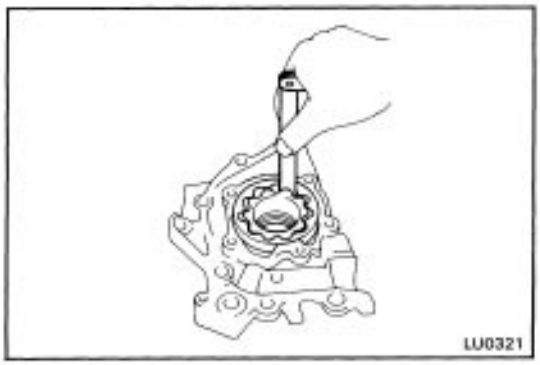

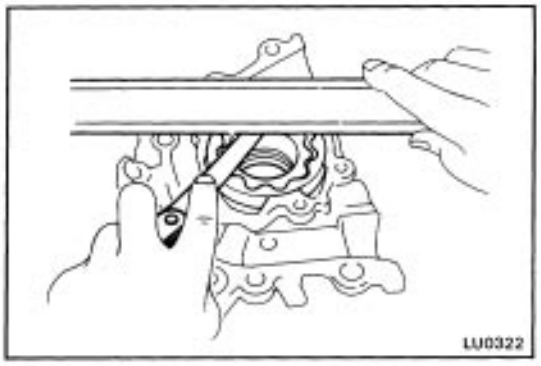

INSPECTION OF OIL PUMP

1. MEASURE BODY CLEARANCE

Using a feeler gauge, measure the clearance between the driven rotor and pump body.

Standard clearance: 4A–FE 0.080 – 0.180 mm
(0.0031 – 0.0071 in.)
4A–GE 0.100 – 0.191 mm
(0.0039 – 0.0075 in.)
Maximum clearance: 0.20 mm (0.0079 in.)

If the clearance is greater than maximum, replace the rotor set and/or body.

2. MEASURE TIP CLEARANCE

Using a feeler gauge, measure the clearance between both rotor tips.

Standard clearance: 4A–FE 0.025 – 0.085 mm
(0.0010 – 0.0033 in.)
4A–GE 0.060 – 0.180 mm
(0.0023 – 0.0071 in.)
Maximum clearance: 0.35 mm (0.0138 in.)

If the clearance is greater than maximum, replace the rotor set.

3. MEASURE SIDE CLEARANCE

Using a feeler gauge and flat block, measure the side clearance as shown.

Standard clearance: 4A–FE 0.025 – 0.085 mm
(0.0010 – 0.0033 in.)
4A–GE 0.025 – 0.075 mm
(0.0010 – 0.0030 in.)
Maximum clearance: 0.10 mm (0.0039 in.)

If the clearance is greater than maximum, replace the rotor set and/or body.

REPLACEMENT OF OIL SEAL

(See page EM–148)

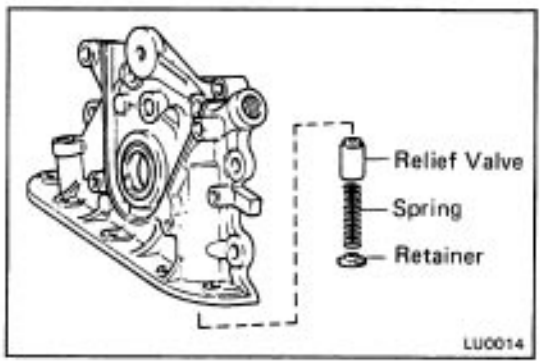

ASSEMBLY OF OIL PUMP

(See page LU–9)

1. INSTALL RELIEF VALVE

(a) Insert the relief valve, spring and retainer into the pump body.

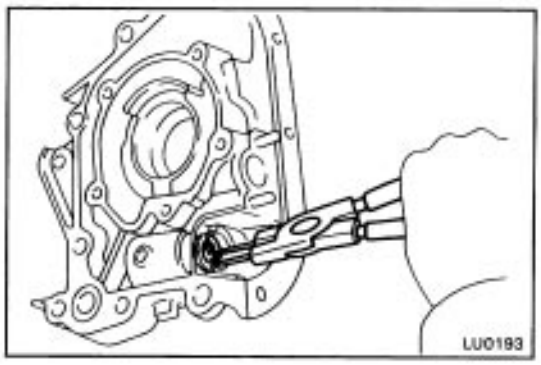

(b) Using snap ring pliers, install the snap ring.

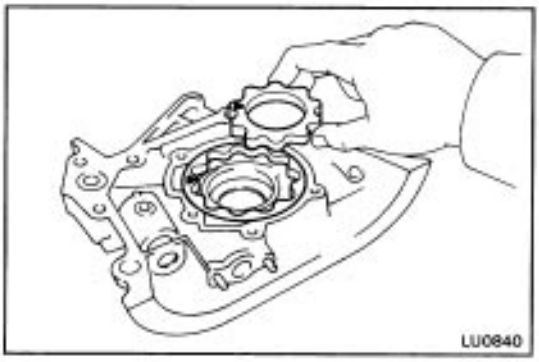

2. INSTALL DRIVE AND DRIVEN ROTORS

(a) Install the drive and driven rotors in the pump body.
HINT: Install the driven rotor with its delta mark facing the same direction as that of the drive rotor.

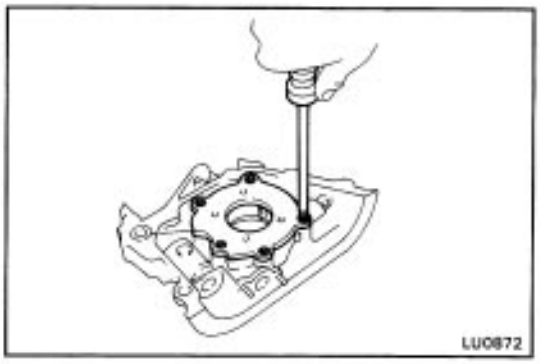

(b) Install the oil pump cover with the five screws.
Torque the screws.

Torque: 105 kg–cm (8 ft–lb, 10 N–m)

INSTALLATION OF OIL PUMP

(See page LU–9)

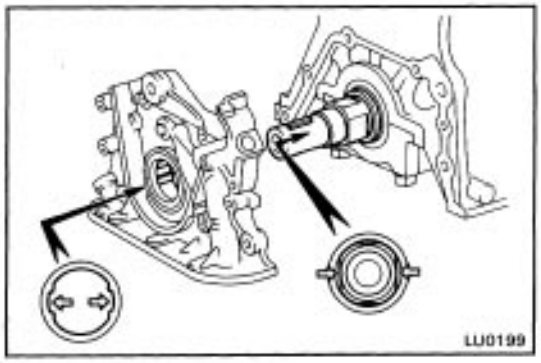

1. INSTALL OIL PUMP ASSEMBLY

(a) Place a new gasket on the block.

(b) Install the oil pump to the crankshaft with the spline teeth of the drive gear engaged with the large teeth of the crankshaft.

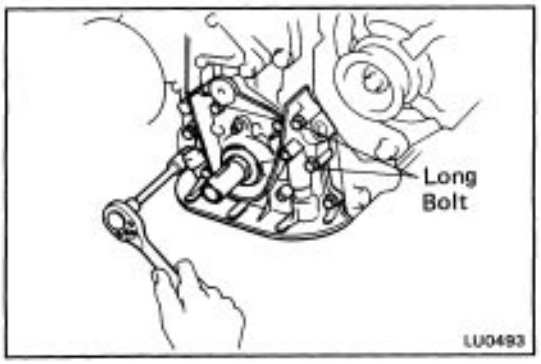

(c) Install and torque the seven bolts.

Torque: 220 kg–cm (16 ft–lb, 21 N–m)

HINT: Each bolt length is indicated in the figure.

Bolt length: Long bolt 35 mm (1.38 in.)

Others 25 mm (0.98 in.)

2. (4A–GE)

INSTALL OIL PAN BAFFLE PLATE

(a) Remove any old packing (FIPG) material and be careful not to drop any oil on the contacting surfaces of the baffle plate and cylinder block.

- Using a razor blade and gasket scraper, remove all the packing (FIPG) material from the gasket surfaces.
- Thoroughly clean all components to remove all the loose material.
- Clean both sealing surfaces with a non–residue solvent.

NOTICE: Do not use a solvent which will affect the painted surfaces.

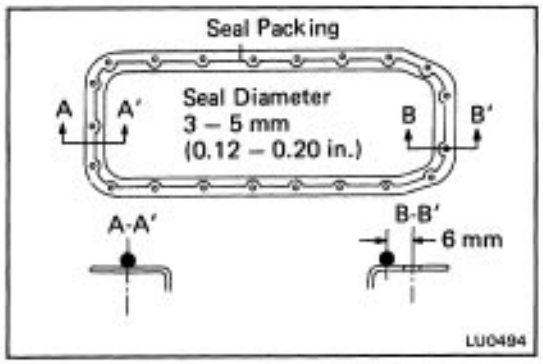

(b) Apply seal packing to the baffle plate as shown in the figure.

Seal packing: Part No. 08826–00080 or equivalent

- Install a nozzle that has been cut to a 3 – 5 mm (0.12 – 0.20 in.) opening.

HINT: Avoid applying an excess amount to the surface. Be particularly careful near oil passages.

- Parts must be assembled within 3 minutes of application. Otherwise, the material must be removed and reapplied.
- Immediately remove nozzle from tube and reinstall cap.

(c) Install the baffle plate.

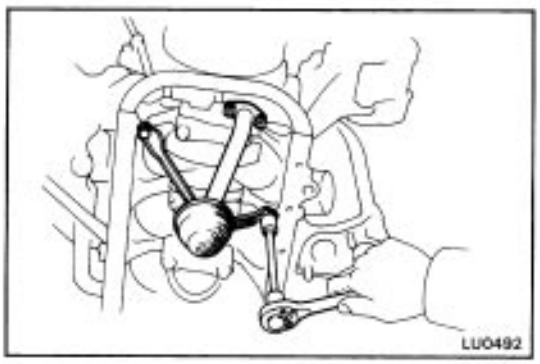

3. INSTALL OIL STRAINER

Place a new oil strainer gasket and install the oil strainer with two bolts and two nuts. Torque the bolts and nuts.

Torque: 95 kg–cm (82 in.–lb, 9.3 N–m)

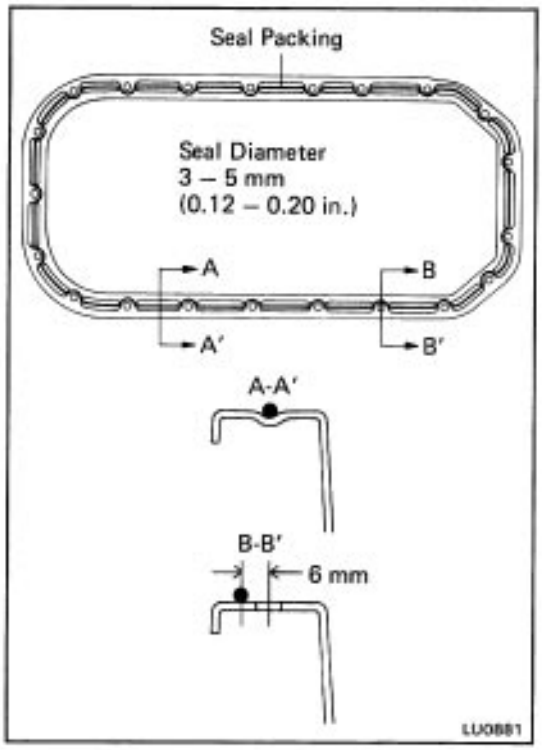

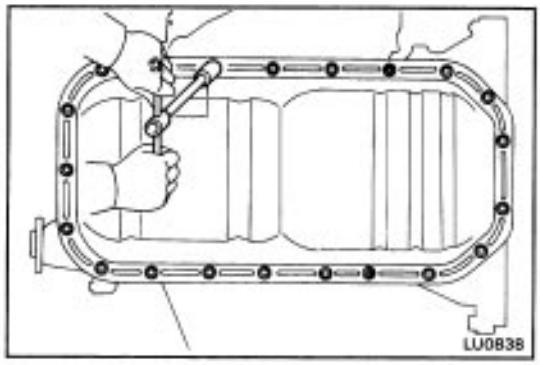

4. INSTALL OIL PAN

(a) Remove any old packing (FIPG) material and be careful not to drop any oil on the contacting surfaces of the oil pan and cylinder block (4A–FE) or baffle plate (4A–G E).

- Using a razor blade and gasket scraper, remove all the packing (FIPG) material from the gasket surfaces.
- Thoroughly clean all components to remove all the loose material.
- Clean both sealing surfaces with a non–residue solvent.

NOTICE: Do not use a solvent which will affect the painted surfaces.

(b) Apply seal packing to the oil pan as shown in the figure.

Seal packing: Part No. 08826–00080 or equivalent

- Install a nozzle that has been cut to a 3 – 5 mm (0.12 – 0.20 in.) opening.

HINT: Avoid applying an excess amount to the surface. Be particularly careful near oil passages.

- Parts must be assembled within 3 minutes of application. Otherwise, the material must be removed and reapplied.
- Immediately remove nozzle from tube and reinstall cap.

(c) Install the oil pan over the studs on the block with the nineteen bolts and two nuts. Torque the bolts and nuts.

Torque: 50 kg–cm (43 in.–lb, 4.9 N–m)

(d) Install the cooler pipe, two new gasket and union bolt. Torque the union bolt.

Torque: 250 kg–cm (18 ft–lb, 25 N–m)

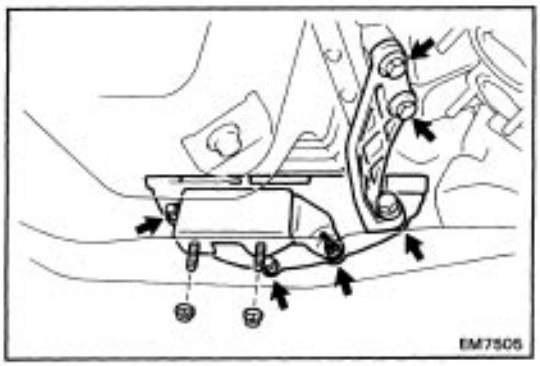

5. (4A–GE)

INSTALL FLYWHEEL HOUSING UNDER COVER

6. INSTALL STIFFENER PLATE AND CENTER MOUNTING

(a) KA–GE)

Install the stiffener plate and three bolts.

Torque: 380 kg–cm (27 ft–lb, 37 N–m)

(b) (2WD)

Install the center mounting, bolt and three nuts.

Torque:

Member side 530 kg–cm (38 ft–lb, 52 N–m)

Plate side 230 kg–cm (17 ft–lb, 23 N–m)

7. INSTALL FRONT EXHAUST PIPE

4A–FE (See step 13 on page EM–160)

4A–GE (See step 11 on page EM–166)

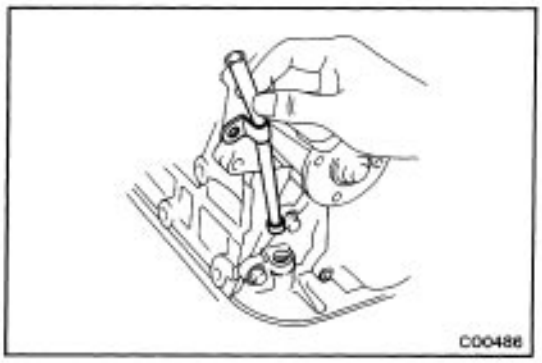

8. INSTALL OIL DIPSTICK GUIDE AND DIPSTICK

(a) Push in the oil dipstick guide with the O–ring coated with a small amount of engine oil.

(b) Install a new O–ring to the oil dipstick guide.

(c) Install the mounting bolt.

(d) Insert the oil dipstick.

9. INSTALL CRANKSHAFT TIMING PULLEY, IDLER PULLEY AND TIMING BELT

4A–FE (See steps 2 to 22 on pages EM–36 to 40)

4A–GE (See steps 3 to 24 on pages EM–48 to 53)

10. REFILL WITH ENGINE OIL (See page LU–7)

11. RECHECK OIL LEVEL

Recheck the engine oil level and refill if necessary.

12. INSTALL HOOD

OIL COOLER AND PRESSURE REGULATOR

COMPONENTS

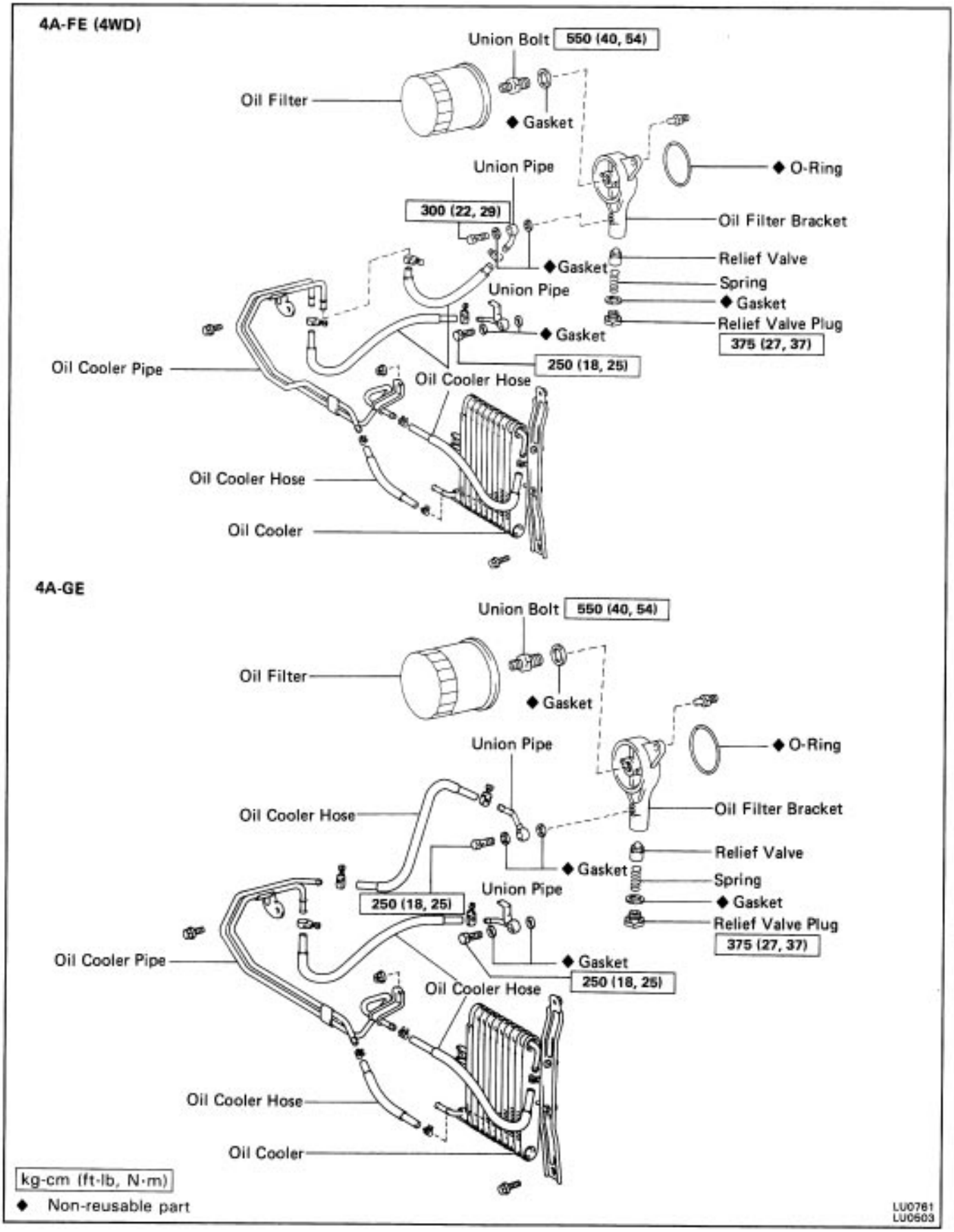

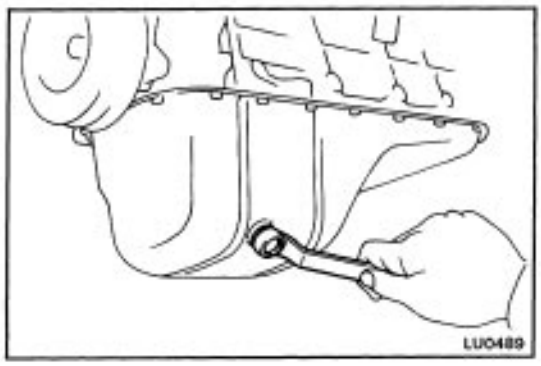

REMOVAL OF OIL COOLER AND RELIEF VALVE

(See page LU–18)

1. DRAIN ENGINE OIL

(a) Remove the oil filler cap.

(b) Remove the oil drain plug and drain the oil into a container.

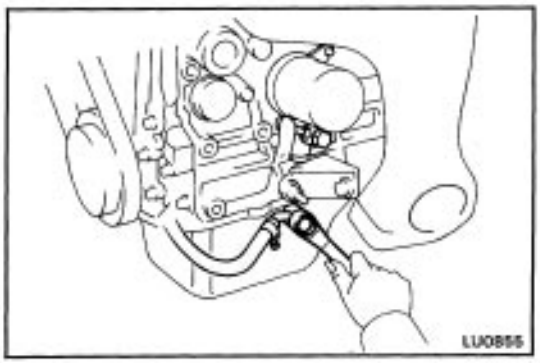

2. REMOVE OIL COOLER HOSES AND PIPE

(a) Remove the oil cooler hose and union from the oil pan.

(b) Disconnect the oil cooler hose from the bracket.

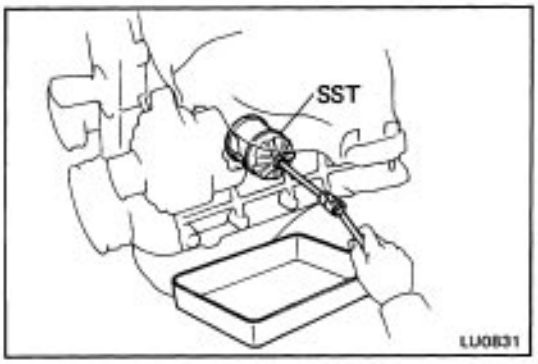

3. REMOVE OIL FILTER

Using SST, remove the oil filter.

SST 09228–06500

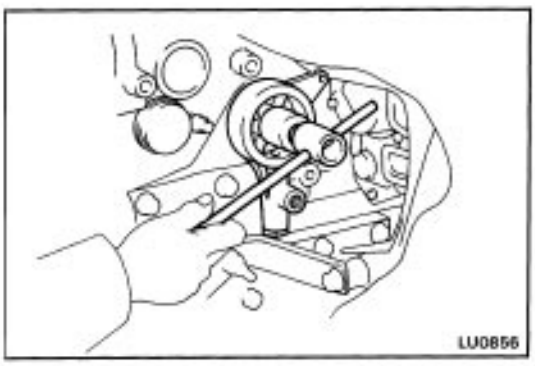

4. REMOVE OIL FILTER BRACKET

Remove the union bolt, oil filter bracket and O–ring.

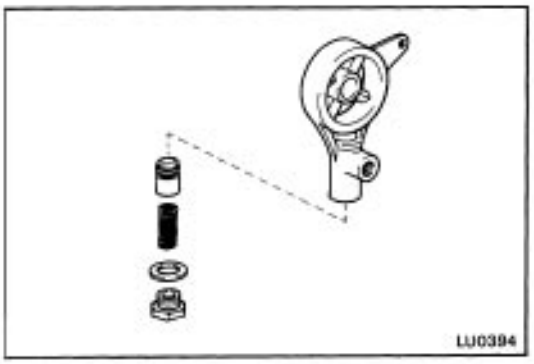

5. REMOVE RELIEF VALVE

Unscrew the relief valve plug and remove the spring, union and the gasket.

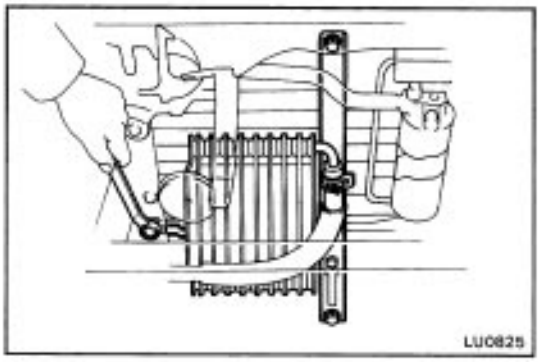

6. REMOVE OIL COOLER

(a) Disconnect the hoses from the oil cooler.

(b) (4A–FE)

Remove the two bolts, nut and oil cooler.

(b) (4A–GE)

Remove the three bolts and oil cooler.

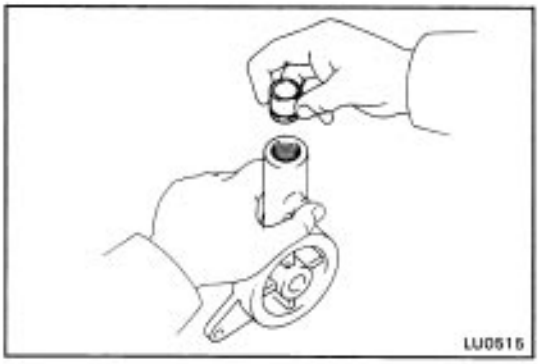

INSPECTION OIL COOLER AND RELIEF VALVE

1. INSPECT OIL COOLER

Check the oil cooler for damage or clogging.

2. INSPECT RELIEF VALVE

Coat the relief valve with engine oil, and check that it falls smoothly into the valve hole by its own weight.

If it does not, replace the relief valve. If necessary, replace the pressure regulator assembly.

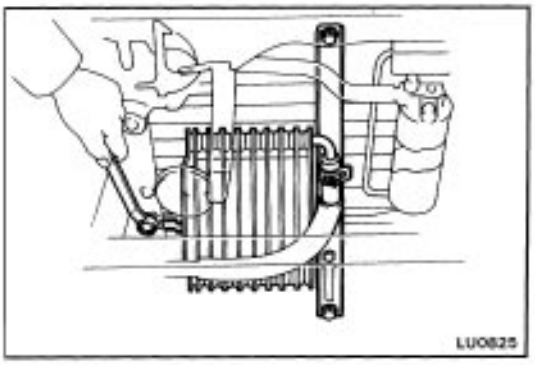

INSTALLATION OF OIL COOLER AND RELIEF VALVE

(See page LU–18)

1. INSTALL OIL COOLER

(a) (4A–FE)

Install the oil cooler with the two bolts and nut.

(b) (4A–GE)

Install the oil cooler with the three bolts.

(c) Connect the hoses to the oil cooler.

2. INSTALL RELIEF VALVE

Insert the relief valve, spring, a new gasket and screw on the relief valve plug. Torque the plug.

Torque: 375 kg–cm (27 ft–lb, 37 N–m)

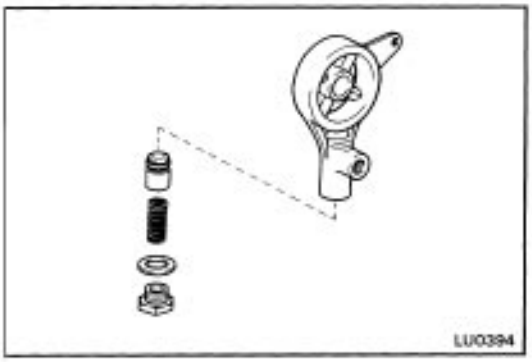

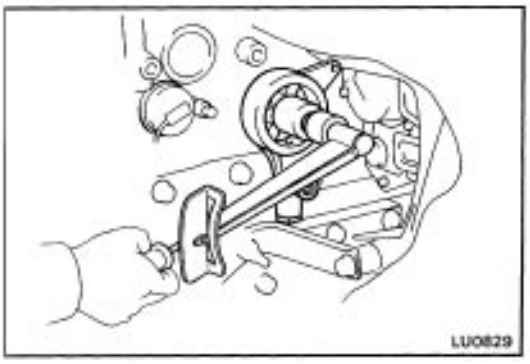

3. INSTALL OIL FILTER BRACKET

Insert a new O–ring and the filter bracket with the union bolt. Torque the union bolt.

Torque: 550 kg–cm (40 ft–lb, 54 N–m)

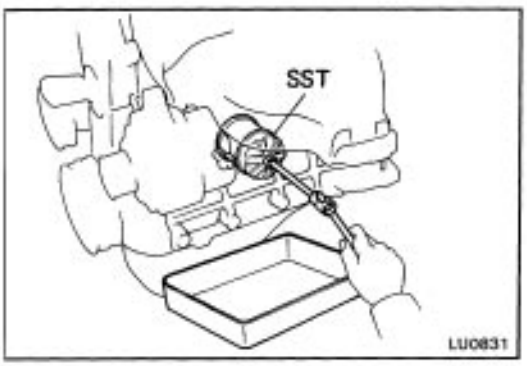

4. INSTALL OIL FILTER (See page LU–7)

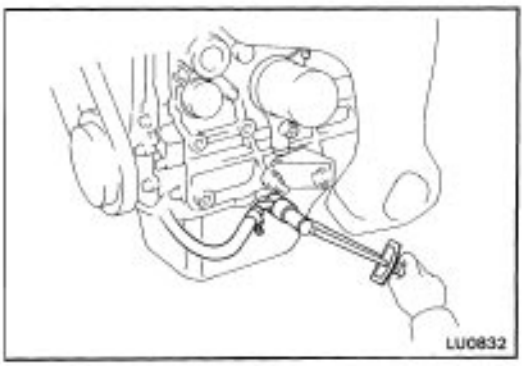

5. INSTALL OIL COOLER PIPE AND HOSES

(a) Connect the oil cooler hose to the bracket.

(b) Install the cooler pipe, two new gaskets and union bolt.

Torque the union bolt.

Torque: 250 kg–cm (18 ft–lb, 25 N–m)

6. REFILL WITH ENGINE OIL (See page LU–7)

7. START ENGINE AND CHECK FOR LEAKS

8. RECHECK ENGINE OIL LEVEL

Recheck the engine oil level and refill as necessary.

MAINTENANCE

(4A–FE ENGINE)
MAINTENANCE SCHEDULE

SCHEDULE A

Maintenance operation:
A = Check and adjust if necessary;
R = Replace, change or lubricate;
I = Inspect and correct or replace if necessary

- Towing a trailer, using a camper or car top carrier.
- Repeated short trips less than 5 miles (8 km) and outside temperatures remain below freezing.
- Extensive idling and/or low speed driving for a long distance such as police, taxi or door–to–door delivery use.
- Operating on dusty, rough, muddy or salt spread roads.

System	Service interval (Odometer reading or months, whichever comes first) / Maintenance items	Maintenance services beyond 60,000 miles (96,000 km) should continue to be performed at the same intervals shown for each maintenance schedule.																	See page (item No.)
	Miles × 1,000	3.75	7.5	11.25	15	18.75	22.5	26.25	30	33.75	37.5	41.25	45	48.75	52.5	56.25	60	Months	
	km × 1,000	6	12	18	24	30	36	42	48	54	60	66	72	78	84	90	96		
ENGINE	Timing belt (1)																R	—	MA–4 (item 1)
	Valve clearance																A	A: Every 72 months	MA–6 (item 12)
	Drive belt	I: First period, 60,000 miles (96,000 km) or 72 months. I: After that every 7,500 miles (12,000 km) or 12 months																	MA–4 (item 2)
	Engine oil and oil filter	R	R	R	R	R	R	R	R	R	R	R	R	R	R	R	R	R: Every 6 months	MA–5 (item 6)
	Engine coolant	R: First period, 45,000 miles (72,000 km) or 36 months. R: After that every 30,000 miles (48,000 km) or 24 months																	MA–5 (item 7)
	Exhaust pipes and mounting s				I				I				I				I	I: Every 24 months	MA–6 (item 11)
FUEL	Idle speed	A: First period, 7,500 miles (12,000 km) or 12 months, second period 30,000 miles (48,000 km) or 36 months A: After that every 30,000 miles (48,000 km) or 36 months																	MA–7 (item 13)
	Air filter (2)	I	I	I	I	I	I	I	R	I	I	I	I	I	I	I	R	I: Every 6 months R: Every 36 months	MA–5 (item 4, 5)
	Fuel lines and connections (3y								I								I	I: Every 36 months	MA–6 (item 10)
	Fuel tank cap gasket																R	R: Every 72 months	MA–6 (item 9)
IGNITION	Spark plugs								R								R	R: Every 36 months	MA–4 (item 3)
EVAP	Charcoal canister																I	I: Every 72 months	MA–6 (item 8)
BRAKES	Brake lining and drums (4)		I		I		I		I		I		I		I		I	I: Every 12 months	MA–8 (item 15)
	Brake pads and discs (Front and rear)		I		I		I		I		I		I		I		I	I: Every 12 months	MA–8 (item 16)
	Brake line pipes and hoses				I				I				I				I	I: Every 24 months	MA–7 (item 14)
CHASSIS	Steering linkage		I		I		I		I		I		I		I		I	I: Every 12 months	MA–8 (item 17)
	Drive shaft boots		I		I		I		I		I		I		I		I	I: Every 12 months	MA–9 (item 19)
	Ball joints and dust covers		I		I		I		I		I		I		I		I	I: Every 12 months	MA–9 (item 20)
	Manual transaxle, automatic transaxle, transfer and differential				R				R				R				R	R: Every 24 months	MA–9 to 10 (item 22 to 26)
	Steering gear housing oil (5)				I				I				I				I	I: Every 24 months	MA–8 (item 18)
	Bolts and nuts on chassis and body (s)		I		I		I		I		I		I		I		I	I: Every 12 months	MA–12 (item 27)

Maintenance services indicated by a star (*) or asterisk (*) are required under the terms of the Emission Control Systems Warranty. See Owner's Guide or Warranty Booklet for complete warranty information.

★ For vehicles sold in California

* For vehicles sold outside California

(1) Applicable to vehicles operated under conditions of extensive idling and/or low speed driving for long distances such as police, taxi or door–to–door delivery use.

(2) Applicable when operating mainly on dusty road. If not, apply SCHEDULE B.

(3) Includes inspection of fuel tank band and vapor vent system.

(4) Also applicable to lining drum for parking brake.

(5) Check for oil leaks from steering gear housing.

(6) Applicable only when operating mainly on rough, muddy roads. The applicable parts are listed below. For other usage conditions, refer to SCHEDULE B.

- Front and rear suspension member to body
- Strut bar bracket to body bolts
- Bolts for sheet installation

SCHEDULE B

CONDITIONS: Conditions other than those listed for SCHEDULE A.

System	Service interval (Odometer reading or months, whichever comes first) / Maintenance items	Maintenance services beyond 60,000 miles (96,000 km) should continue to be performed at the same intervals shown for each maintenance schedule.									See page (item No.)
	Miles × 1,000	7.5	15	22.5	30	37.5	45	52.5	60	Months	
	km × 1,000	12	24	36	48	60	72	84	96		
ENGINE	Valve clearance								A	A: Every 72 months	MA–6 (item 121
	Drive belt	I: First period, 60,000 miles (96,000 km) or 72 months. I: After that every 7,500 miles (12,000 km) or 12 months									MA–4 (item 2)
	Engine oil and oil filter★	R	R	R	R	R	R	R	R	R: Every 12 months	MA–5 (item 6)
	Engine coolant	R: First period, 45,000 miles (72,000 km) or 36 months. R: After that every 30,000 miles (48,000 km) or 24 months									MA–5 (item 71
	Exhaust pipes and mounting s				I				I	I: Every 36 months	MA–6 (item 11)
FUEL	Idle speed	A: First period. 7,500 miles (12,000 km) or 12 months, second period 30,000 miles (48,000 km) or 36 months A: After that every 30,000 miles (48,000 km) or 36 months									MA–7 (item 13)
	Air filter ★				R				R	R: Every 36 months	MA–5 (item 5)
	Fuel lines and connections				I				I	I: Every 36 months	MA–6 (item 101
	Fuel tank cap gasket								R	R: Every 72 months	MA–6 (item 9)
IGNITION	Spark plugs ★ *				R				R	R: Every 36 months	MA–4 (item 3)
EV AP	Charcoal canister								I	I: Every 72 months	MA–6 (item 8)
BRAKES	Brake lining and drums		I		I		I		I	I: Every 24 months	MA–8 (item 15)
	Brake pads and discs (Front and rear)		I		I		I		I	I: Every 24 months	MA–8 (item 16)
	Brake line pipes and hoses		I		I		I		I	I: Every 24 months	MA–7 (item 14)
CHASSIS	Steering linkage		I		I		I		I	I: Every 24 months	MA–8 (item 17)
	Drive shaft boots		I		I		I		I	I: Every 24 months	MA–9 (item 19)
	Ball joints and dust covers		I		I		I		I	I: Every 24 months	MA–9 (item 20)
	Manual transaxle, automatic transaxle, transfer and differential3j		I		I		I		I	I: Every 24 months	MA–9 (item 21)
	Steering , ear housing oil		I		I		I		I	I: Every 24 months	MA–8 (item 18)
	Bolts and nuts on chassis and body 5		I		I		I		I	I: Every 24 months	MA–12 (item 27)

Maintenance services indicated by a star (★) or asterisk (*) are required under the terms of the Emission Control Systems Warranty. See Owner's Guide or Warranty Booklet for complete warranty information.

★ For vehicles sold in California

* For vehicles sold outside California

(1) Includes inspection of fuel tank band and vapor vent system.

(2) Also applicable to drum lining for parking brake.

(3) Check for leakage

(4) Check for oil leaks from steering gear housing.

(5) The Applicable part are listed below.

- Front and rear suspension member to body
- Strut bar bracket to body bolt
- Bolts for sheet installation

MAINTENANCE OPERATIONS

ENGINE

Cold Engine Operations

1. REPLACE TIMING BELT

(a) Remove the timing belt.
(See pages EM–30 to 33)

(b) Install the timing belt.
(See pages EM–36 to 40)

2. INSPECT DRIVE BELTS

(a) Visually check the belt for excessive wear, frayed cords etc.
If necessary, replace the drive belt.

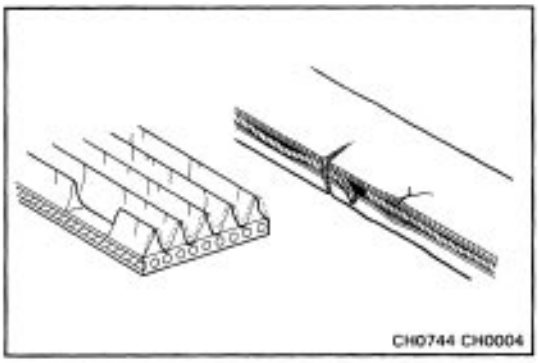

HINT: Cracks on the rib side of a belt are considered acceptable. If the belt has chunks missing from the ribs, it should be replaced.

(b) Using a belt tension gauge, check the drive belt tension.
Belt tension gauge:
Nippondenso BTG–20 (95506–00020) or
Borroughs No. BT–33–73F

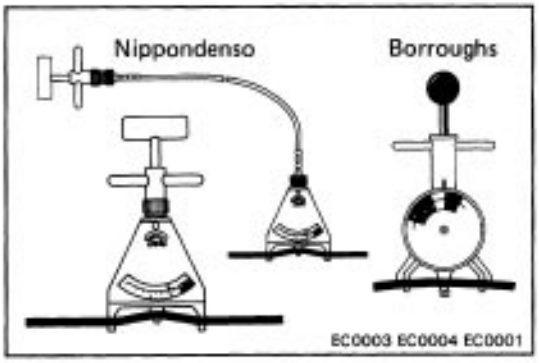

Drive belt tension:

Alternator	**Used belt 130 ±20 lb**
	New belt 160 ±20 lb
PS	**Used belt 80 ±20 lb**
	New belt 125 ±25 lb
A/C	**Used belt 100 ±20 lb**
	New belt 160 ±20 lb

If necessary, adjust the drive belt tension.

HINT:

- ”New belt” refers to a belt which has been used less than 5 minutes on a running engine.
- ”Used belt” refers to a belt which has been used on a running engine for 5 minutes or more.
- After replacing the drive belt, check that it fits properly in the ribbed grooves, especially in the places difficult to see.
- After installing a new belt, run the engine for about 5 minutes and then recheck the tension.

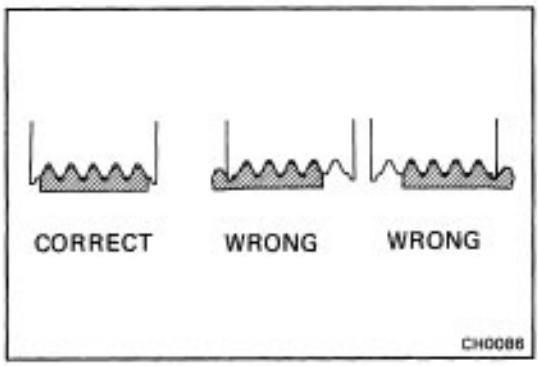

3. REPLACE SPARK PLUGS

(a) Disconnect the spark plug cords at the boot.
DO NOT pull on the cords.

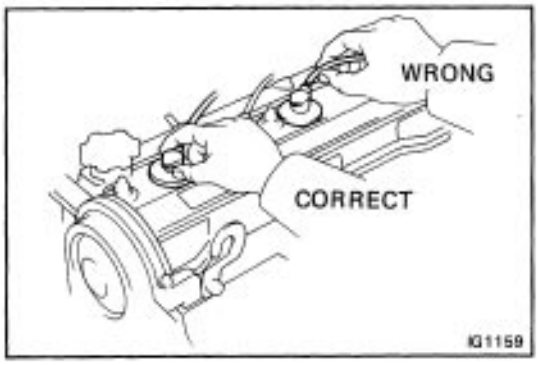

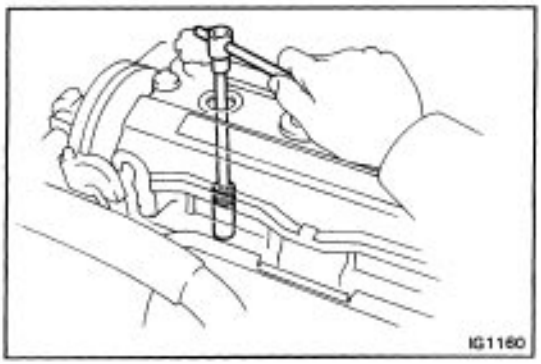

(b) Using a plug wrench (16 mm), remove the spark plugs.

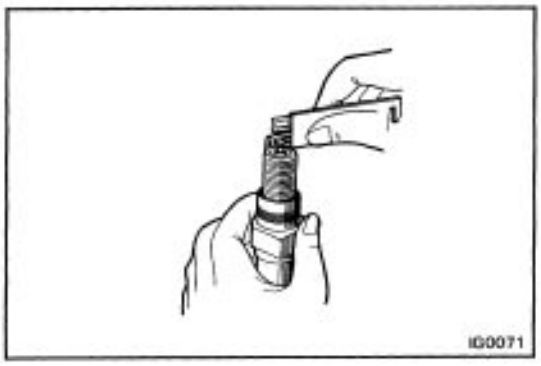

(c) Check the gap on the new plugs.

Gap: 0.8 mm (0.031 in.)

Recommended spark plugs:

ND Q16R–U

NGK BCPR5EY

HINT: If adjusting the gap of a new plug, bend only the base of the ground electrode. Do not touch the tip. Never attempt to adjust the gap on a used plug.

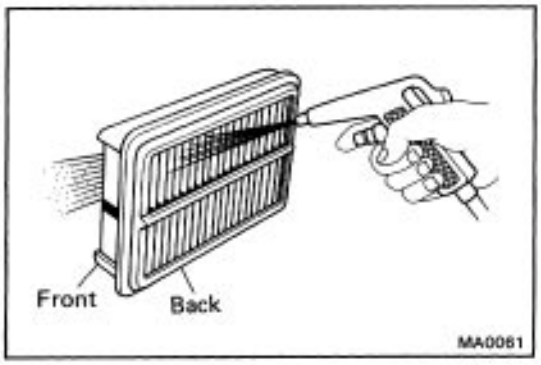

4. INSPECT AIR FILTER

(a) Visually check that the air cleaner element is not excessively dirty, damaged or oily.

(b) Clean the element with compressed air.

First blow air from the back side thoroughly. Then blow air off the front side of the element.

5. REPLACE AIR FILTER

Replace the air cleaner element with a new one.

6. REPLACE ENGINE OIL AND OIL FILTER

(See page LU–7)

Oil grade: API grade SG, multigrade, fuel–efficient and recommended viscosity oil.

Engine oil capacity (Drain and refill with oil filter change): 3.2 liters (3.4 US qts, 2.8 Imp. qts)

7. REPLACE ENGINE COOLANT

(a) Drain the coolant from the radiator cock and engine drain plug. (Engine drain plug is on the left next to the oil filter.)

(b) Close the drain plug and cock.

(c) Fill the system with coolant.

Coolant capacity (w/ heater):

M/T (Ex. AE92L–ACMXKK)

5.6 liters (5.9 US qts, 4.9 Imp. qts)

M/T (AE92L–ACMXKK)

6.2 liters (6.6 US qts, 5.5 Imp. qts)

A/T 6.1 liters (6.4 US qts, 5.4 Imp. qts)

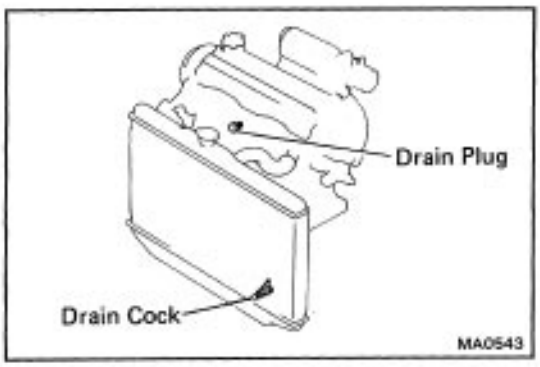

Use a good brand of ethylene–glycol type coolant, mixed according to the manufacturer's instructions.

Using coolant which includes more than 50% ethylene glycol but not more than 70%) is recommended.

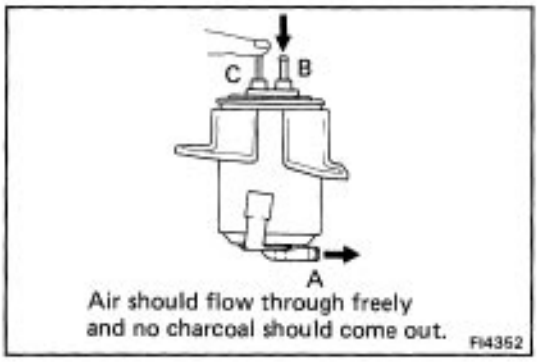

8. INSPECT CHARCOAL CANISTER

(a) Disconnect the hoses from the charcoal canister located below the fuel filter. Label hoses for correct reinstallation.

(b) Plug pipe C with your fingers and blow compressed air (3 kg /cm2, 43 psi or 294 kPa) through pipe B (fuel tank side).

- Check that air comes out of the bottom pipe A without resistance.
- Check that no activated charcoal comes out.

If necessary, replace the charcoal canister.

NOTICE: Do not attempt to wash the charcoal.

(c) Connect the hoses to the charcoal canister.

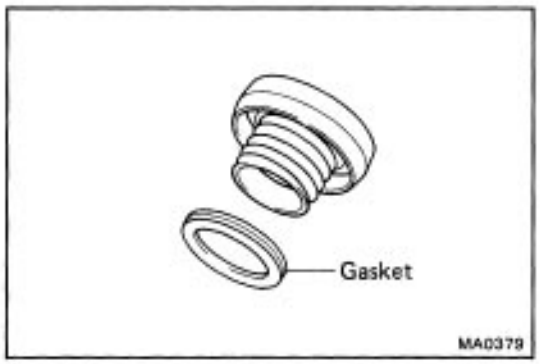

9. REPLACE GASKET IN FUEL TANK CAP

(a) Remove the old gasket (0–ring) from the fuel tank cap.

Do not damage the cap.

(b) Install a new gasket by hand.

(c) Inspect the cap for damage or cracks.

(d) Install the cap and check the torque limiter.

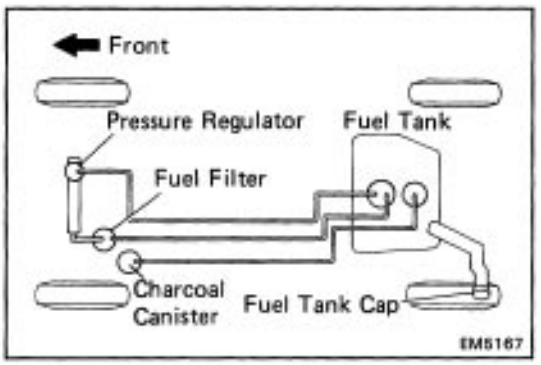

10. INSPECT FUEL LINES AND CONNECTIONS

Visually inspect the fuel lines for cracks, leakage, loose connections, deformation or tank band looseness.

11. INSPECT EXHAUST PIPES AND MOUNTINGS

Visually inspect the pipes, hangers, and connections for severe corrosion, leaks or damage.

12. ADJUST VALVE CLEARANCE

HINT: Check and adjust the valve clearance while the engine is cold.

(a) Remove the cylinder head cover.

(b) Measure and adjust valve clearance.

(See page EM–16)

Valve clearance (cold):

Intake 0.15 – 0.25 mm (0.006 – 0.010 in.)

Exhaust 0.20 – 0.30 mm (0.008 – 0.012 in.)

(c) Reinstall the cylinder head cover.

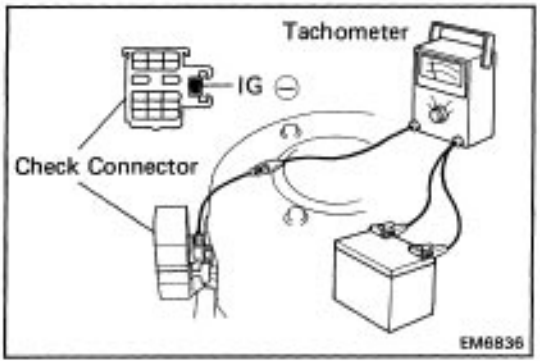

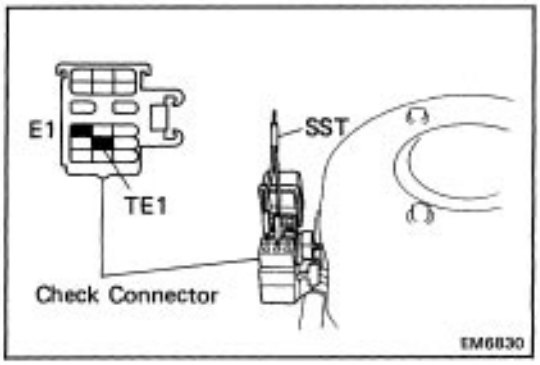

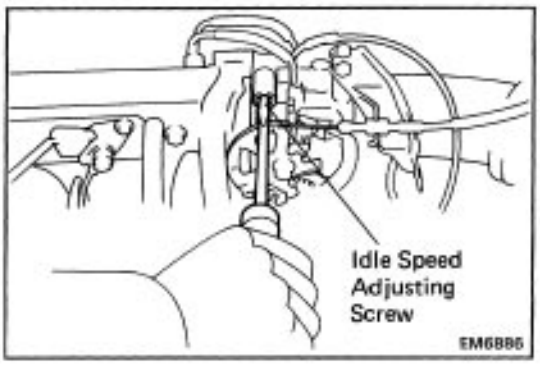

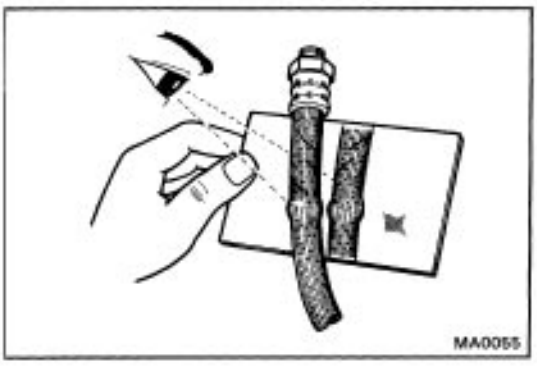

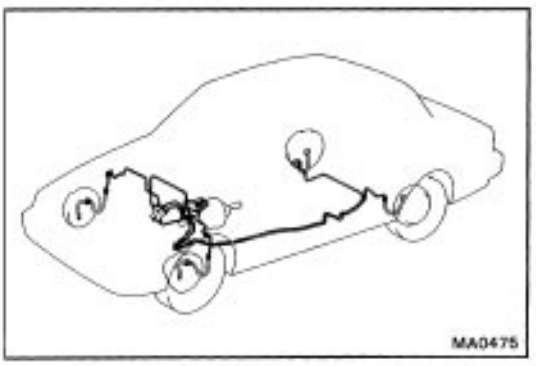

Hot Engine Operation

13. ADJUST IDLE SPEED

(a) Preparation

- Air cleaner installed
- All pipes and hoses of air intake system connected
- All vacuum lines connected (i.e., EVAP, EGR systems, etc.)
- EFI system wiring connectors fully plugged
- Engine at normal operating temperature
- Accessories switched OFF
- Transmission in ”N” range

(b) Connect a tachometer to the engine.

Connect the test probe of a tachometer to terminal IG (–) of the check connector.

NOTICE:

- **NEVER allow the tachometer terminal to touch ground as it could result in damage to the igniter and/or ignition coil.**
- **As some tachometers are not compatible with this ignition system, we recommend that you confirm the compatibility of your unit before using.**

(c) Race the engine at 2,500 rpm for about 2 minutes.

(d) Using SST, connect terminals TE 1 and E 1 of the check connector.

SST 09843–18020

(e) Set the idle speed by turning the IDLE SPEED ADJUSTING SCREW.

Idle speed: 2WD 700 rpm (w/ cooling fan OFF)
4WD 800 rpm (w/ cooling fan OFF)

(f) Remove the tachometer and SST.

SST 09843–18020

BRAKES

14. INSPECT BRAKE LINE PIPES AND HOSES

HINT: Inspect in them a well lighted area. Inspect the entire circumference and length of the brake hoses using a mirror as required. Turn the front wheels fully right or left before inspecting the front brake.

(a) Check all brake lines and hoses for:

- Damager
- Wear
- Deformation
- Cracks
- Corrosion
- Leaks
- Bends
- Twists

(b) Check all clamps for tightness and connections for leakage.

(c) Check that the hoses and lines are clear of sharp edges, moving parts and the exhaust system.

(d) Check that the lines installed in grommets pass through the center of the grommets.

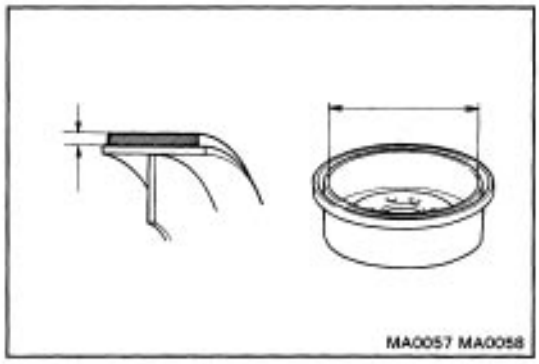

15. INSPECT REAR BRAKE LININGS AND DRUMS
(See pages BR–24 and 25)

(a) Check the linings for wear.
Minimum lining thickness: 1.0 mm (0.039 in.)

(b) Check the brake drums for scoring or wear.
Maximum drum inside diameter: 201.0 mm (7.913 in.)

(c) Clean the brake parts with a damp cloth.

HINT: Do not use compressed air to clean the brake parts.

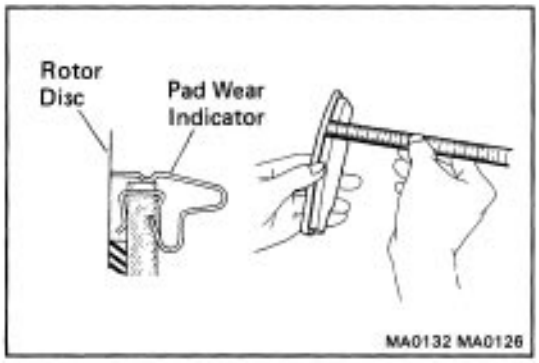

16. INSPECT FRONT BRAKE PADS AND DISCS
(See pages BR–20)

(a) Check the thickness of the disc brake pads and check for irregular wear.
Minimum pad thickness: 1.0 mm (0.039 in.)

HINT: If a squealing or scraping noise occurs from the front–brake during driving, check the pad wear indicator. If there are traces of the indicator contacting the disc rotor, the disc pad should be replaced.

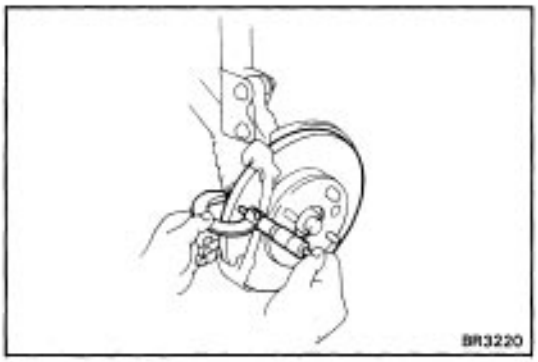

(b) Check the disc for wear or runout.
Minimum disc thickness: 17.0 mm (O.669 in.)
Maximum disc runout: 0.09 mm (0.0035 in.)

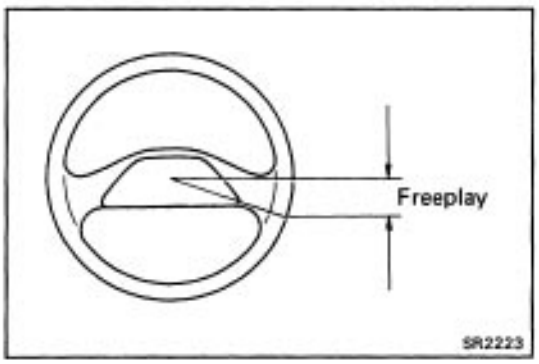

CHASSIS

17. INSPECT STEERING LINKAGE

(a) Check the steering wheel freeplay.
Maximum steering wheel freeplay: 30 mm (1.18 in.)
With the vehicle stopped and pointed straight ahead, rock the steering wheel gently back and forth with light finger pressure.

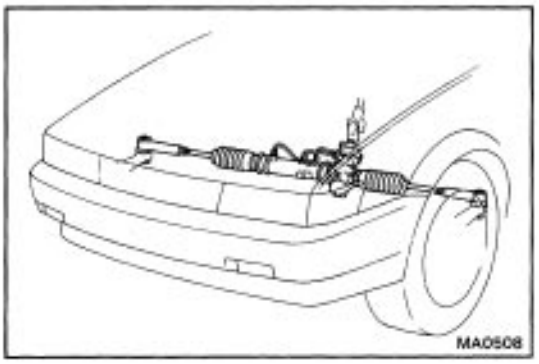

(b) Check the steering linkage for looseness and damage.
Check that:

- Tie rod ends do not have excessive play.
- Dust seals and boots are not damaged.
- Boot clamps are not loose.

18. INSPECT STEERING GEAR HOUSING OIL

Check the steering gear housing for oil leakage.

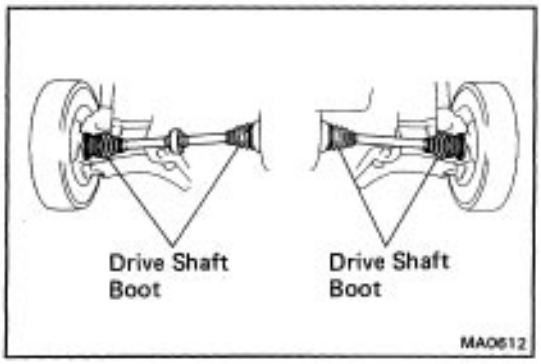

19. INSPECT DRIVE SHAFT BOOTS

Inspect the drive shaft boots for clamp looseness, grease leakage or damage.



20. INSPECT BALL JOINTS AND DUCT COVERS

(a) Inspect the ball joints for excessive looseness.
(See page SA–32)
Maximum ball joint vertical play: 0 mm (0 in.)
If excessive play is found, replace the ball joints.

(b) Inspect the just cover for damage.

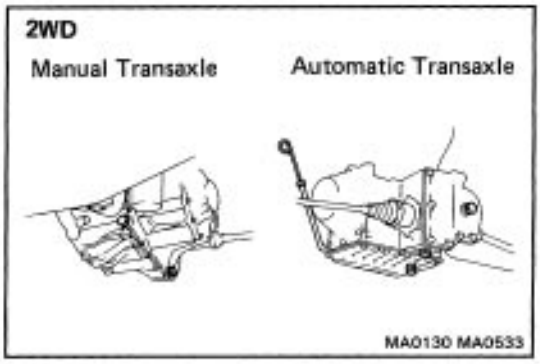

21. CHECK TRANSAXLE (A/T OR MIT) AND DIFFERENTIAL OIL (3 A/T ONLY)

Visually check the transaxle (A/T or M/T) and differential for– oil leakage.
If leakage is found, check for the cause and repair.

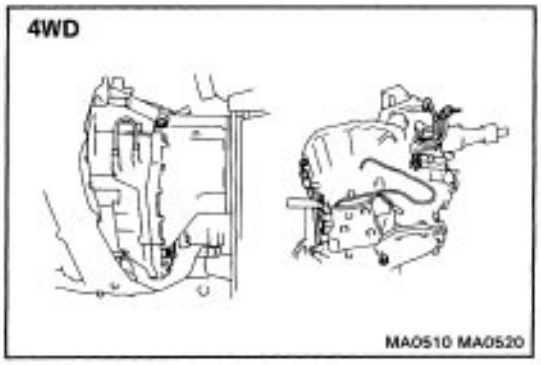

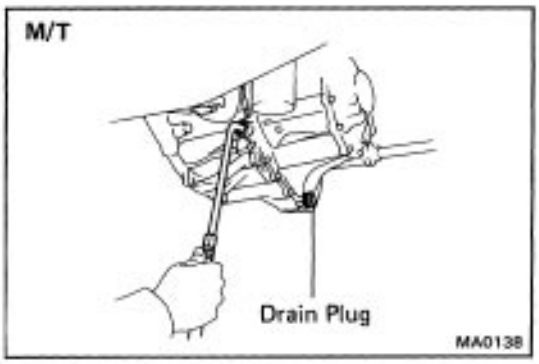

22. (2WD M/T)

REPLACE MANUAL TRANSAXLE (TRANSMISSION AND DIFFERENTIAL) OIL

(a) Remove the engine under cover LH.
(b) Remove the drain plug and drain the oil.
(c) Reinstall the drain plug securely.
(d) Add new oil until it begins to run out of the filler hole.

Transaxle oil (M/T and differential):
Oil grade API GL–4 or GL–5
Viscosity SAE 75W–90
Capacity 2.6 liters (2.7 US qts, 2.3 Imp. qts)

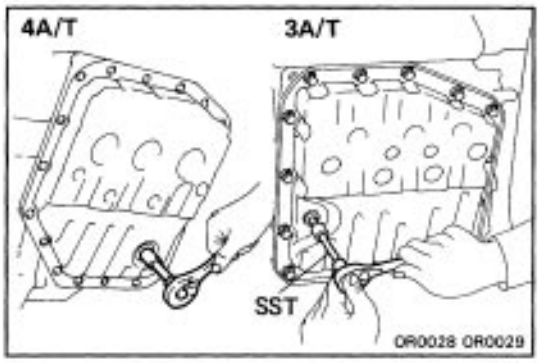

23. (2WD AM

REPLACE AUTOMATIC TRANSAXLE (TRANSMISSION AND DIFFERENTIAL) FLUID

Automatic Transmission

(a) Remove the drain plug with SST (for 3 A/T) and drain the fluid.
SST 09043–38100

(b) Reinstall the drain plug securely.

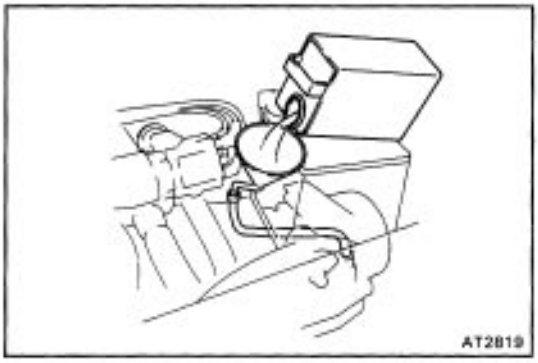

(c) With the engine OFF, add new fluid through the dipstick tube.
Fluid: ATF DEXRON®II
Drain and refill capacity:
3 A/T 2.5 liters (2.6 US qts, 2.2 Imp. qts)
4 A/T 3.1 liters (3.3 US qts, 2.7 Imp. qts)

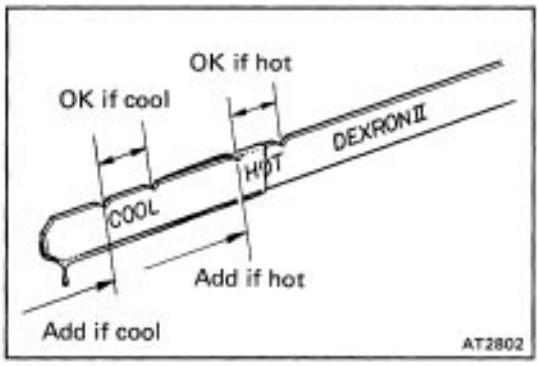

(d) Start the engine and shift the selector into all positions from ”P” through ”L”, and then shift into ”P”.

(e) With the engine idling, check the fluid level.
Add fluid up to the ”COOL” level on the dipstick.
M Check the fluid level with the normal fluid temperature (70 – 80˚C or 158 – 176˚F) and add it as necessary.

NOTICE: Do not overfill.

HINT: Do not overfill. The automatic transmission and differential are separate units. (3 A/T only)

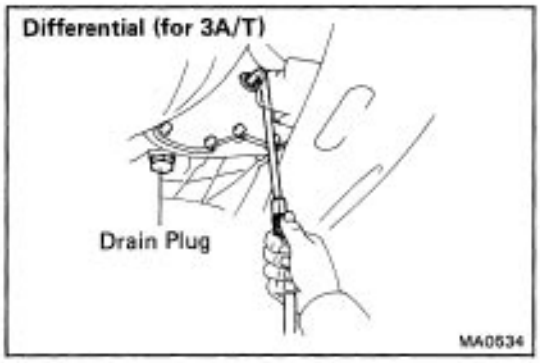

Differential (for 3 AlT Automatic Transmission)

(a) Remove the drain plug and drain the oil.

(b) Reinstall the drain plug securely.

(c) Add new oil until it begins to run out of the filter hole.
Differential oil –
Fluid: ATF DEXRON®II
Capacity: 1.4 liters (1.5 US qts, 1.2 Imp. qts)

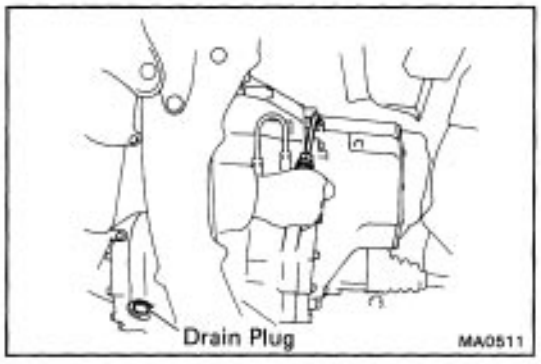

24. (4WD M/T)

REPLACE MANUAL TRANSAXLE (TRANSMISSION AND DIFFERENTIAL) AND TRANSFER OIL

(a) Remove the engine under cover LH.

(b) Remove the drain plugs and drain the oil.

(c) Reinstall the drain plugs securely.

(d) Add new oil until it begins to run out of the filler hole.

Transaxle oil (M/T, differential and transfer):
Recommended oil Transaxle oil E50
(08885–80206) or equivalent
Oil grade API GL–5
Viscosity Above –181C (O°F) SAE
75W–90, 80W–90 or 90
Below –180C (O*F) SAE
75W–90 80W–90 or 80W
Capacity 5.0 liters
(5.3 US qts, 4.4 Imp. qts)

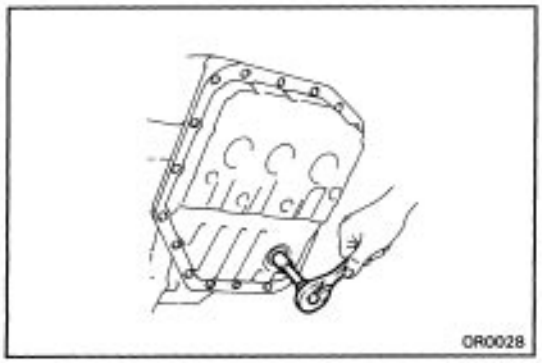

25. (4WD A/T

REPLACE AUTOMATIC TRANSAXLE (TRANSMISSION AND DIFFERENTIAL) FLUID AND TRANSFER OIL

Automatic Transmission (include Differential)

(a) Remove the drain plug and drain the fluid.

(b) Reinstall the drain plug securely.

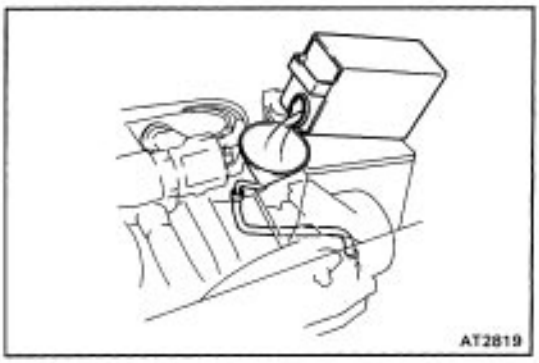

(c) With the engine OFF, add new fluid through the filter tube.
Fluid: ATF Type T (08886–00405) or equivalent
Drain and refill capacity:
3.1 liters (3.3 US qts. 2.7 Imp. qts)

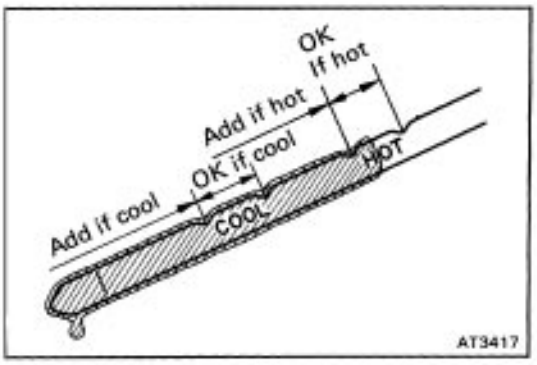

(d) Start the engine and shift the selector into all positions from ”P” through ”L”, and then shift into ”P”.

(e) With the engine idling, check the fluid level.
Add fluid up to the ”COOL” level on the dipstick.

(f) Check the fluid level with the normal fluid temperature (70 – 80˚C or 158 – 176˚F) and add it as necessary.

NOTICE: Do not overfill.

HINT: The automatic transaxle and transfer are separate units.

Transfer

(a) Remove the drain plug and drain the oil.

(b) Reinstall the drain plug securely.

(c) Add new oil through the filler tube.
Transfer oil:
Recommended oil Transaxle oil E50
(08885–80206) or equivalent
Oil grade API GL–5
Viscosity 75W–90, 80W–90 or 90
Capacity 0.7 liters
(0.7 US qts. 0.6 Imp. qts)

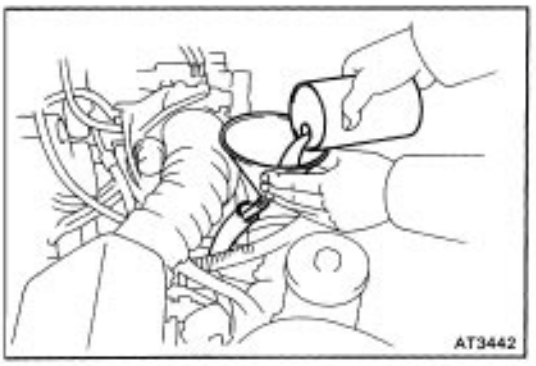

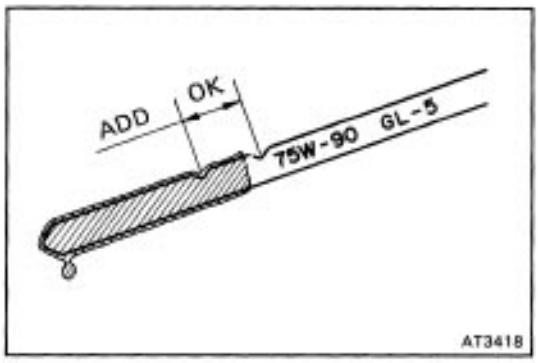

(d) Check that the oil level is between the land F marks on the dipstick.

NOTICE: Do not overfill.

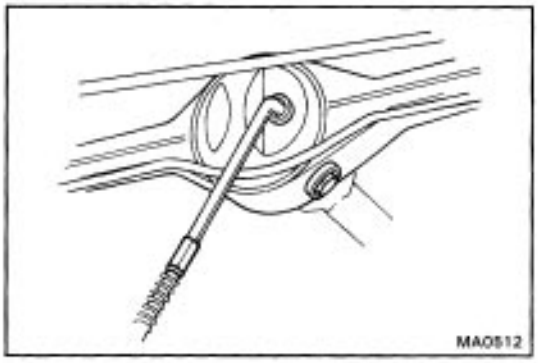

26. (4WD)

REPLACE REAR DIFFERENTIAL OIL

(a) Remove the drain plug and drain the oil

(b) Reinstall the drain plug securely.

(c) Add new oil until it begins to run out of the filler hole.

Differential oil:

Oil grade API GL–5

Viscosity Above –180C (O°F) SAE 90

Below –180C (0 ˚ F) SAE 80W–90 or 80w

Capacity 1.1 liters (1.2 US qts, 1.0 Imp. qts)

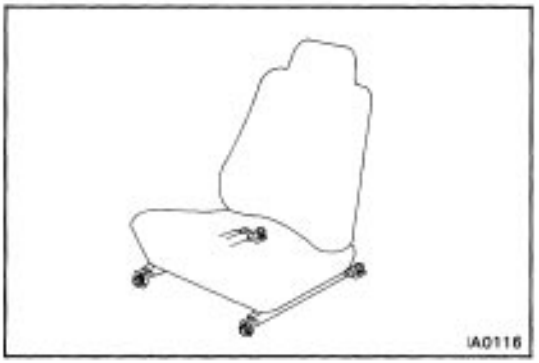

27. TIGHTEN BOLTS AND NUTS ON CHASSIS AND BODY

Tighten the following parts:

- Front seat mounting bolts

Torque: 375 kg–cm (27 ft–lb, 37 N–m)

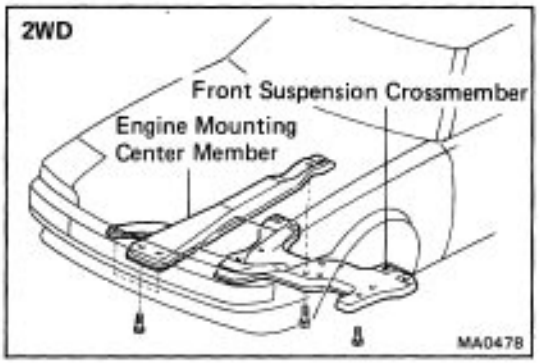

- Engine mounting center member–to–body mounting bolts

Torque: 620 kg–cm (45 ft–lb, 61 N–m)

- Front suspension crossmember to body mounting bolt.

Torque: 2,100 kg–cm (152 ft–lb, 206 N–m)

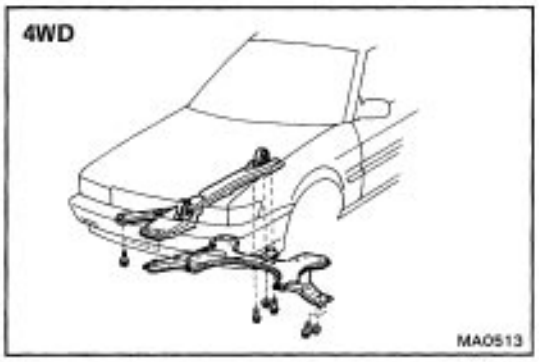

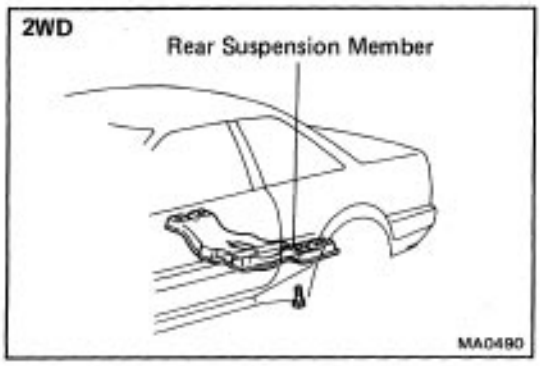

- Rear suspension member to body mounting bolt (2WD).

Torque: 760 kg–cm (55 ft–lb, 75 N–m)

28. FINAL INSPECTION

(a) Check the operation of the body parts:

- Hood
  Auxiliary catch operates properly
  Hood locks securely when closed
- Front and rear doors
  Door locks operate properly
  Door close properly
- Luggage compartment door
  Door lock operates properly
- Seats
  Seat adjust easily and locks securely in any position
  Front seat back locks securely in any position
  Folding–down rear seat backs lock securely

(b) Road test

- Check the engine and chassis for abnormal noise.
- Check that the vehicle does not wander or pull to one side.
- Check that the brakes work properly and do not drag.

(c) Be sure to deliver a clean car and especially check:

- Steering wheel
- Shift lever knob
- All switch knobs
- Door handles
- Seats

(4A–GE ENGINE)
MAINTENANCE SCHEDULE

Maintenance operation:
A = Check and adjust if necessary;
R = Replace, change or lubricate;
I = Inspect and correct or replace if necessary

SCHEDULE A

CONDITIONS:

- Towing a trailer, using a camper or car top carrier.
- Repeated short trips less than 5 miles (8 km) and outside temperatures remain below freezing.
- Extensive idling and/or low speed driving for a long distance such as police, taxi or door–to–door delivery use.
- Operating on dusty, rough, muddy or salt spread roads.

System	Service interval (Odometer reading or months, whichever comes first) / Maintenance items	Maintenance services beyond 60,000 miles (96,000 km) should continue to be performed at the same intervals shown for each maintenance schedule.																	See page (item No.)
	Miles × 1,000	3.75	7.5	11.25	15	18.75	22.5	26.25	30	33.75	37.5	41.25	45	48.75	52.5	56.25	60	Months	
	km × 1,000	6	12	18	24	30	36	42	48	54	60	66	72	78	84	90	96		
ENGINE	Timing belt																R	—	MA–16 (item 1)
	Valve clearance																A	A: Every 72 months	MA–19 (item 12)
	Drive belt	I: First period, 60,000 miles (96,000 km) or 72 months. I: After that every 7,500 miles (12,000 km) or 12 months																	MA–16 (item 2)
	Engine oil and oil filter	R	R	R	R	R	R	R	R	R	R	R	R	R	R	R	R	R: Every 6 months	MA–17 (item 6)
	Engine coolant	R: First period, 45,000 miles (72,000 km) or 36 months. R: After that every 30,000 miles (48,000 km) or 24 months																	MA–17 (item 7)
	Exhaust pies and mounting s				I				I				I				I	I: Every 24 months	MA–18 (item 11)
FUEL	Idle speed	A: First period. 7,500 miles (12,000 km) or 12 months, second period 30,000 miles (48,000 km) or 36 months A: After that every 30,000 miles (48,000 km) or 36 months																	MA–19 (item 13)
	Air filter	I	I	I	I	I	I	I	R	I	I	I	I	I	I	I	R	I: Every 6 months R: Every 36 months	MA–17 (item 4, 5)
	Fuel lines and connections 131								I								I	I: Every 36 months	MA–18 (item 10)
	Fuel tank ca gasket																R	R: Every 72 months	MA–18 (item 9)
IGNITION	Spark plugs																R	R: Every 72 months	MA–16 (item 3)
EVAP	Charcoal canister																I	I: Every 72 months	MA–18 (item 8)
BRAKES	Brake pads and discs (Front and rear)		I		I		I		I		I		I		I		I	I: Every 12 months	MA–20 (item 15)
	Brake line pipes and hoses				I				I				I				I	I: Every 24 months	MA–20 (item 14)
CHASSIS	Steering linkage		I		I		I		I		I		I		I		I	I: Every 12 months	MA–21 (item 16)
	Drive shaft boots		I		I		I		I		I		I		I		I	I: Every 12 months	MA–21 (item 18)
	Ball points and dust covers		I		I		I		I		I		I		I		I	I: Every 12 months	MA–21 (item 19)
	Manual transaxle				R				R				R				R	R: Every 24 months	MA–22 (item 21)
	Steering ear housing oil (4)				I				I				I				I	I: Every 24 months	MA–21 (item 17)
	Bolts and nuts on chassis and body (5)		I		I		I		I		I		I		I		I	I: Every 12 months	MA–22 (item 22)

Maintenance service indicated by a star (*) are required under the terms of the Emission Control Systems Warranty. See Owner's Guide or Warranty Booklet or complete warranty information.

★ For vehicles sold in California

(1) Applicable to vehicles operated under conditions of extensive idling and/or low speed driving for long distances such as police, taxi or door–to–door delivery use)

(2)Applicable when operating mainly on dusty road. If not, apply SCHEDULE B.

(3) Includes inspection of fuel tank band and vapor vent system.

(4) Check for oil leaks from steering gear housing.

(5) Applicable only when operating mainly on rough, muddy roads. The applicable parts are listed below. For other usage conditions, refer to SCHEDULE B.

- Front and rear suspension member to body
- Strut bar bracket to body bolts
- Bolts for sheet installation

SCHEDULE B

CONDITIONS: Conditions other than those listed for SCHEDULE A.

System	Service interval (Odometer reading or months, whichever comes first) / Maintenance items	Maintenance service beyond 60,000 miles (96,000 km) should continue to be performed at the same intervals shown for each maintenance schedule.									See page (item No.)
	Miles × 1,000	7.5	15	22.5	30	37.5	45	52.5	60	Months	
	km × 1,000	12	24	36	48	60	72	84	96		
ENGINE	Valve clearance								A	A: Every 72 months	MA–19 (item 12)
	Drive belt	I: First period, 60,000 miles (96,000 km) or 72 months. I: After that every 7,500 miles (12,000 km) or 12 months									MA–16 (item 2)
	Engine oil and oil filter*	R	R	R	R	R	R	R	R	R: Every 12 months	MA–17 (item 6)
	Engine coolant	R: First period, 45,000 miles (72,000 km) or 36 months. R: After that every 30,000 miles (48,000 km) or 24 months									MA–17 (item 7)
	Exhaust pipes and mountings				I				I	I: Every 36 months	MA–18 (item 11)
FUEL	Idle speed	A: First period. 7,500 miles (12,000 km) or 12 months, 30,000 miles (48,000 km) or 36 months A: After that every 30,000 miles (48,000 km) or 36 months									MA–19 (item 13)
	Air filter*				R				R	R: Every 36 months	MA–17 (item 5)
	Fuel lines and connections				I				I	I: Every 36 months	MA–18 (item 10)
	Fuel tank cap gasket								R	R: Every 72 months	MA–18 (item 9)
IGNITION	Spark plugs								R	R: Every 72 months	MA–16 (item 3)
EVAP	Charcoal canister								I	I: Every 72 months	MA–18 (item 8)
BRAKES	Brake pads and discs (Front and rear)		I		I		I		I	I: Every 24 months	MA–20 (item 15)
	Brake line pipes and hoses		I		I		I		I	I: Every 24 months	MA–20 (item 14)
CHASSIS	Steering linkage e		I		I		I		I	I: Every 24 months	MA–21 (item 16)
	Drive shaft boots		I		I		I		I	I: Every 24 months	MA–21 (item 18)
	Ball joints and dust covers		I		I		I		I	I: Every 24 months	MA–21 (item 19)
	Manual transaxle(2)		I		I		I		I	I: Every 24 months	MA–21 (item 20)
	Steering ear housing oil (3)		I		I		I		I	I: Every 24 months	MA–21 (item 17)
	Bolts and nuts on chassis and bod y(4)		I		I		I		I	I: Every 24 months	MA–22 (item 22)

Maintenance services indicated by a star (*) are required under the terms of the Emission Control Systems Warranty. See Owner's Guide or Warranty Booklet for complete warranty information.

★ For vehicles sold in California

(1) Includes inspection of fuel tank band and vapor vent system.

(2) Check for leakage

(3) Check for oil leaks from steering gear housing.

(4) The Applicable part are listed below.

- Front and rear suspension member to body
- Strut bar bracket to body bolt
- Bolts for sheet installation

MAINTENANCE OPERATIONS

ENGINE

Cold Engine Operations

1. REPLACE TIMING BELT

(a) Remove the timing belt.
(See pages EM–41 to 45)

(b) Install the timing belt.
(See pages EM–49 to 53)

2. INSPECT DRIVE BELT

(a) Visually check the belt for excessive wear, frayed cords etc.
If necessary, replace the drive belt.

HINT: Cracks on the rib side of a belt are considered acceptable. If the belt has chunks missing from the ribs, it should be replaced.

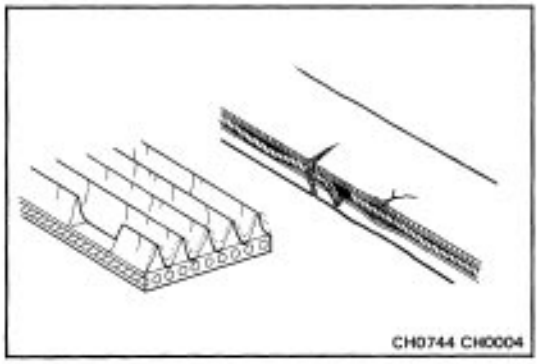

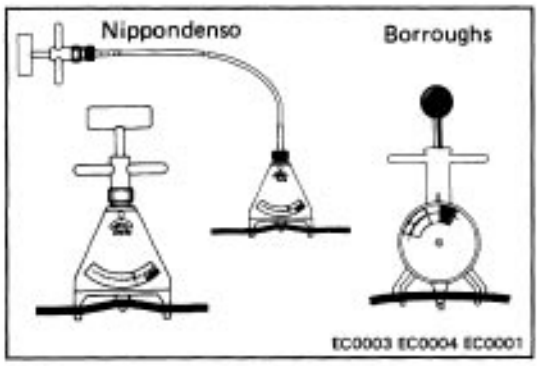

(b) Using a belt tension gauge, check the drive belt tension.
Belt tension gauge:
Nippondenso BTG–20 (95506–00020) or
Borroughs No. BT–33–73F

Drive belt tension:

Alternator	**Used belt 115 ± 20 lb**
	New belt 175 ± 5 lb
PS and/or A/C	**Used belt 115 ± 20 lb**
	New belt 175 ± 5 lb

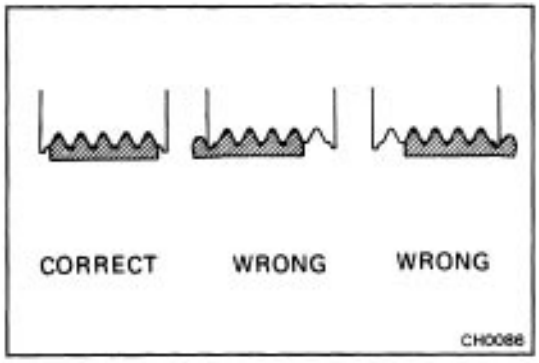

If necessary, adjust the drive belt tension.

HINT:

- ”New belt” refers to a belt which has been used less than 5,minutes on a running engine.
- ”Used belt” refers to a belt which has been used on a running engine for 5 minutes or more.
- After replacing the drive belt, check that it fits properly in the ribbed grooves, especially in the places difficult to see.
- After installing a new belt, run the engine for about 5 minutes and then recheck the tension.

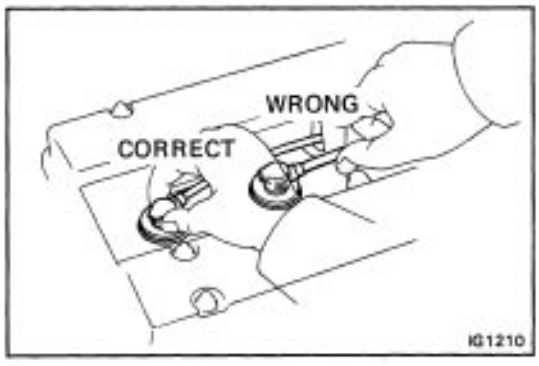

3. REPLACE SPARK PLUGS

(a) Remove the plug cord cover.

(b) Disconnect the spark plug cords at the boot.
DO NOT pull on the cords.

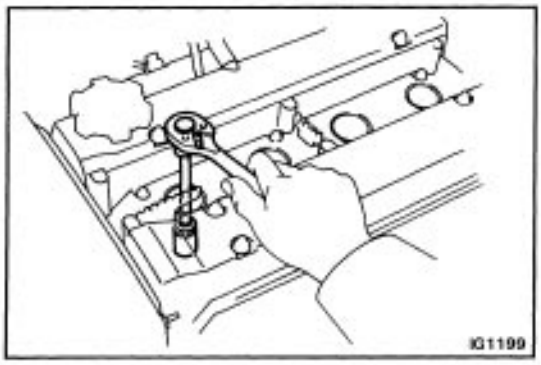

(c) Using a plug wrench (16 mm), remove the spark plugs.

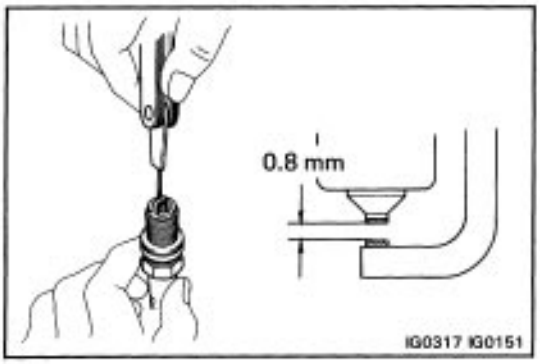

(d) Check the gap on the new plugs.

Gap: 0.8 mm (0.031 in.)

Recommended spark plugs:

ND PK20R8

NGK BKR6EP8

HINT: If adjusting the gap of a new plug, bend only the base of the ground electrode. Do not touch the tip. Never attempt to adjust the gap on a used plug.

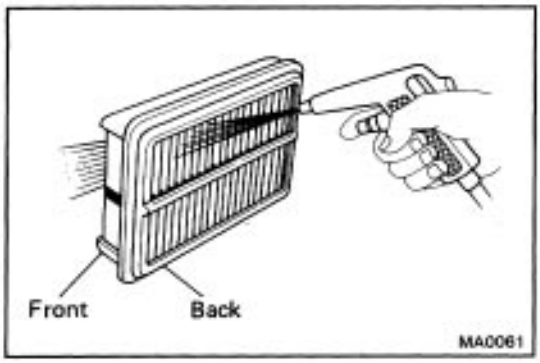

4. INSPECT AIR FILTER

(a) Visually check that the air cleaner element is not excessively dirty, damaged or oily.

(b) Clean the element with compressed air.

First blow from air the back side thoroughly. Then blow off the front side of the element.

5. REPLACE AIR FILTER

Replace the air cleaner element with a new one.

6. REPLACE ENGINE OIL AND OIL FILTER

(See page LU–7)

Oil grade: API grade SG, multigrade, fuel–efficient and recommended viscosity oil.

Engine oil capacity (Drain and refill with oil filter change): 3.7 liters (3.9 US qts, 3.3 Imp. qts)

7. REPLACE ENGINE COOLANT

(a) Drain the coolant from the radiator and engine drain cocks. (Engine drain cock is on the left next to the oil filter.)

(b) Close the drain cocks.

(c) Fill the system with coolant.

Coolant capacity (w/ heater):

6.0 liters (6.3 US qts, 5.3 Imp. qts)

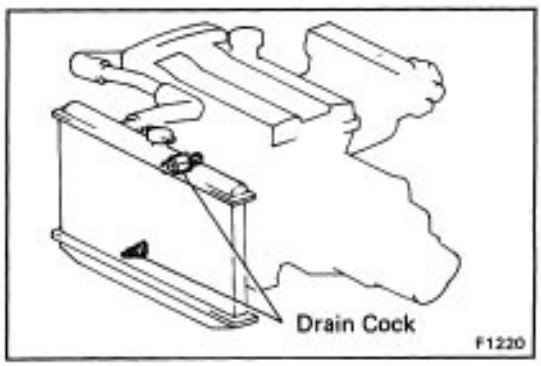

Use a good brand of ethylene–glycol type coolant, mixed according to the manufacturer's instructions.

Using coolant which includes more than 50% ethylene glycol (but not more than 70%) is recommended.

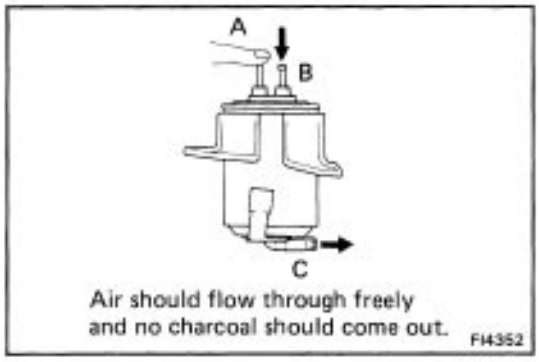

8. INSPECT CHARCOAL CANISTER

(a) Disconnect the hoses from the charcoal canister located below the air intake chamber. Label the hoses for correct reinstallation.

(b) Plug pipe A with your finger and blow compressed air (3 kg/cm2, 43 psi or 294 kPa) through pipe B (fuel tank side).

- Check that air comes out of the bottom pipe C without resistance.
- Check that no activated charcoal comes out.

If necessary, replace the charcoal canister.

NOTICE: Do not attempt to wash the charcoal.

(c) Connect the hoses to the charcoal canister.

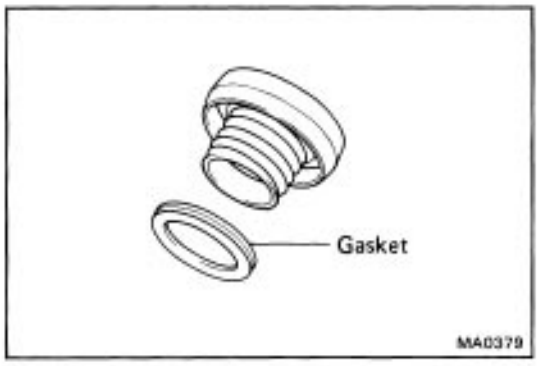

9. REPLACE GASKET IN FUEL TANK CAP

(a) Remove the old gasket (0–ring) from the fuel tank cap.

Do not damage the cap.

(b) Install a new gasket by hand.

(c) Inspect the cap for damage or cracks.

(d) Install the cap and check the torque limiter.

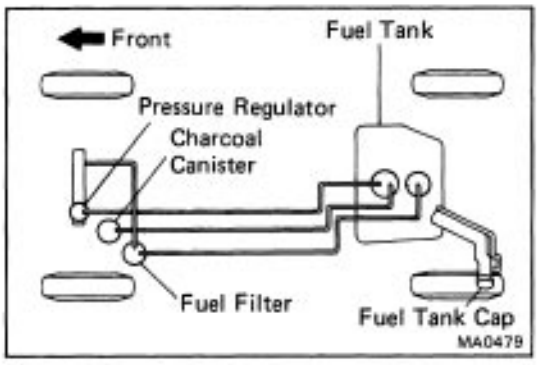

10. INSPECT FUEL LINES AND CONNECTIONS

Visually inspect the fuel lines for cracks, leakage, loose connections, deformation or tank band looseness.

11. INSPECT EXHAUST PIPE AND MOUNTINGS

Visually inspect the pipes, hangers, and connections for severe corrosion, leaks or damage.

12. ADJUST VALVE CLEARANCE

HINT: Check and adjust the valve clearance while the engine is cold.

(a) Remove the cylinder head covers.

(b) Measure and adjust valve clearance.

(See page EM–22)

Valve clearance (cold):

Intake 0.15 – 0.25 mm (0.006 – 0.010 in.)

Exhaust 0.20 – 0.30 mm (0.008 – 0.012 in.)

(c) Reinstall the cylinder head covers.

Hot Engine Operation

13. ADJUST IDLE SPEED

(a) Preparation

- Air cleaner installed
- All pipes and hoses of air intake system connected
- All vacuum lines connected (i.e., EVAP, EGR systems, etc.)
- EFI system wiring connectors fully plugged
- Engine at normal operating temperature
- Accessories switched OFF
- Transmission in ”N” range

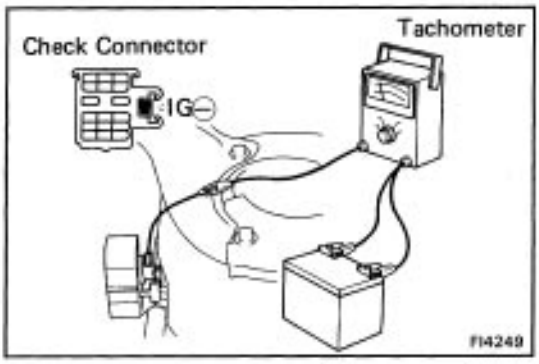

(b) Connect a tachometer to the engine.

Connect the tachometer– positive (+) terminal to the terminal IG (–) of the check connector–.

NOTICE:

- **NEVER allow the tachometer terminal to touch ground as it could result in damage to the igniter and/or ignition coil.**
- **As some tachometers are not compatible with this ignition system, we recommend that you confirm the compatibility of your unit before using.**

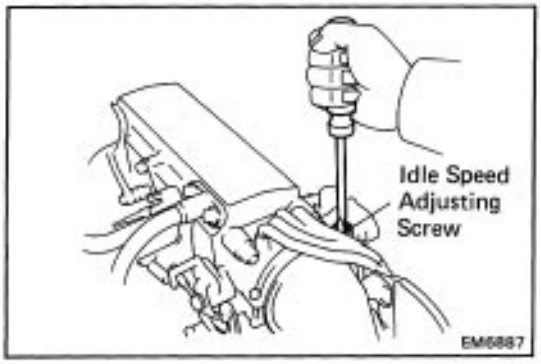

(c) Race the engine at 2,500 rpm for about 2 minutes.

(d) Set the idle speed by turning the IDLE SPEED ADJUSTING SCREW.

Idle speed: 800 rpm (wl cooling fan OFF)

(e) Remove the tachometer.

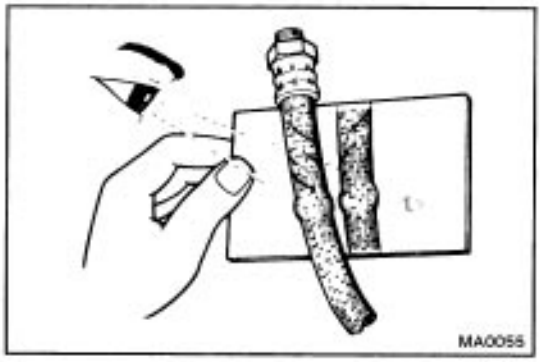

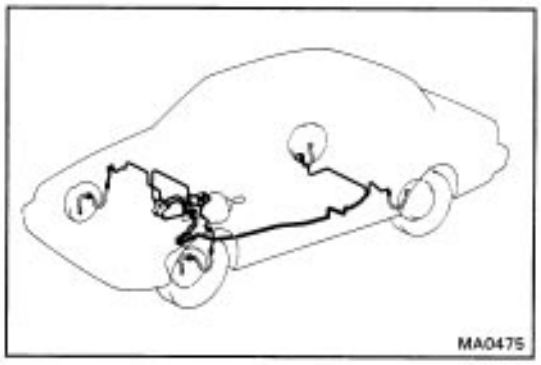

BRAKES

14. INSPECT BRAKE LINE PIPES AND HOSES

HINT: Inspect them in a well lighted area. Inspect the entire circumference and length of the brake hoses using a mirror as required. Turn the front wheels fully right or left before inspecting the front brake.

(a) Check all brake lines and hoses for:

- Damage
- Corrosion
- Wear
- Leaks
- Deformation
- Bends
- Cracks
- Twists

(b) Check all clamps for tightness and connections for leakage.

(c) Check that the hoses and lines are clear of sharp edges, moving parts and the exhaust system.

(d) Check that the lines installed in grommets pass through the center of the grommets.

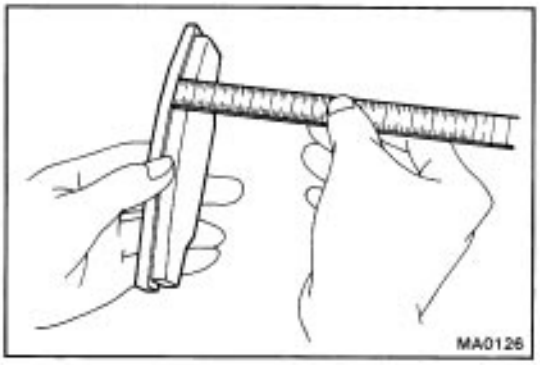

15. INSPECT FRONT AND REAR BRAKE PADS AND DISCS

(Front: See page BR–20, Rear: See page BR–34)

(a) Check the thickness of the disc brake pads and check for irregular wear.

Minimum pad thickness: 1.0 mm (0.039 in.)

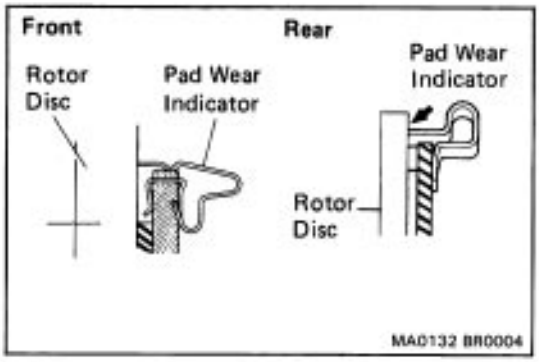

HINT: If a squealing or scraping noise occurs from the front or rear brakes during driving, check the pad wear indicator. If there are traces of the indicator contacting the disc rotor, the disc pad should be replaced.

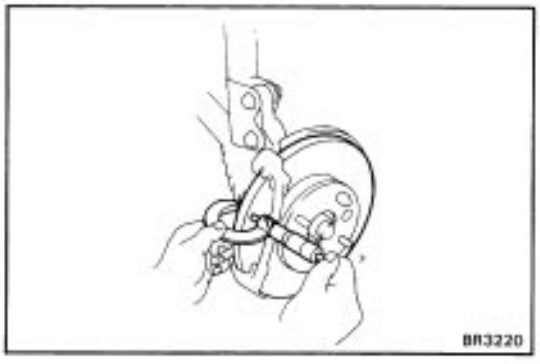

(b) Check the disc for wear or runout.

Minimum disc thickness:

Front 21.0 mm (0.827 in.)

Rear 8.0 mm (0.315 in.)

Maximum disc runout:

Front 0.09 mm (0.0035 in.)

Rear 0.10 mm (0.0039 in.)

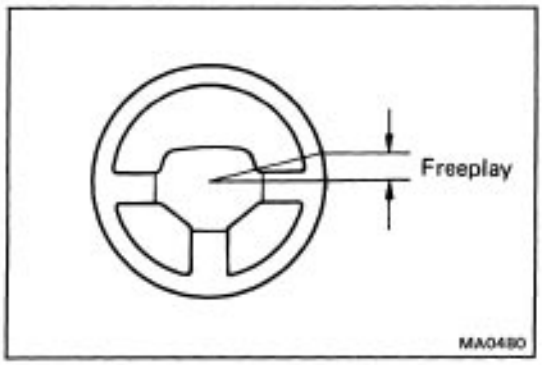

CHASSIS

16. INSPECT STEERING LINKAGE

(a) Check the steering wheel freeplay.

Maximum steering wheel freeplay: 30 mm (1.18 in.)

With the vehicle stopped and pointed straight ahead, rock the steering wheel gently back and forth with light finger pressure.

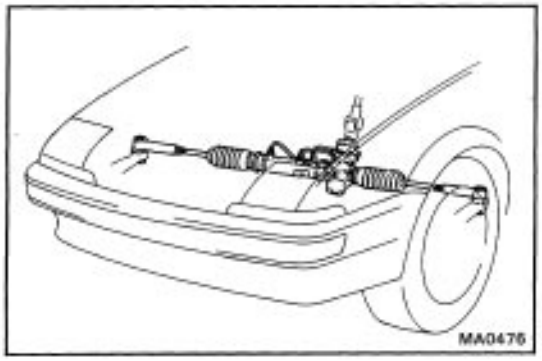

(b) Check the steering linkage for looseness and damage.

Check that:

- Tie rod ends do not have excessive play.
- Dust seals and boots are not damaged.
- Boot clamps are not loose.

17. INSPECT STEERING GEAR HOUSING OIL

Check the steering gear housing for oil leakage.

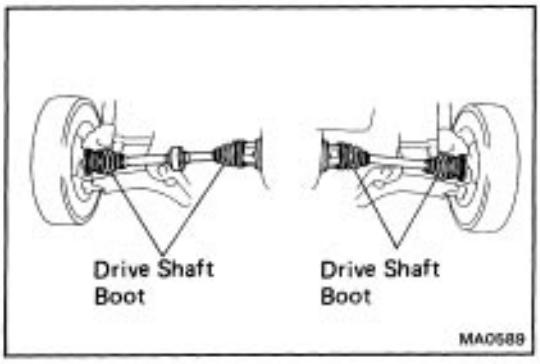

18. INSPECT DRIVE SHAFT BOOTS

Inspect the drive shaft boots for clamp looseness, grease leakage or damage.

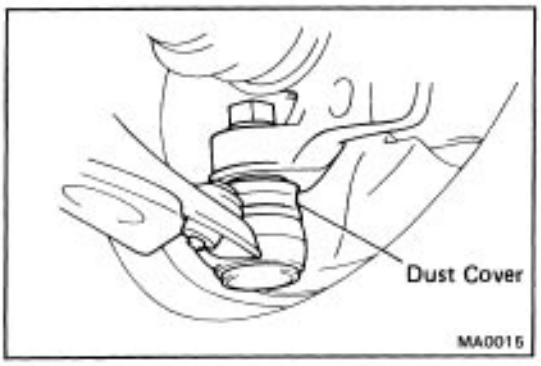

19. INSPECT BALL JOINTS AND DUCT COVERS

(a) Inspect the ball joints for excessive looseness.

(See page SA–32)

Maximum ball joint vertical play: 0 mm (0 in.)

If excessive play is found, replace the ball joints.

(b) Inspect the just cover for damage.

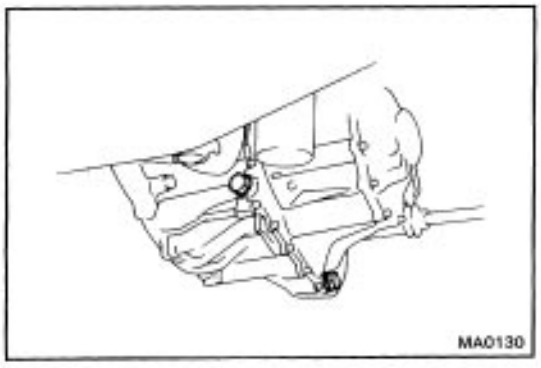

20. CHECK TRANSAXLE AND DIFFERENTIAL OIL

Visually check the transaxle and differential for oil leakage.
If leakage is found, check for the cause and repair.

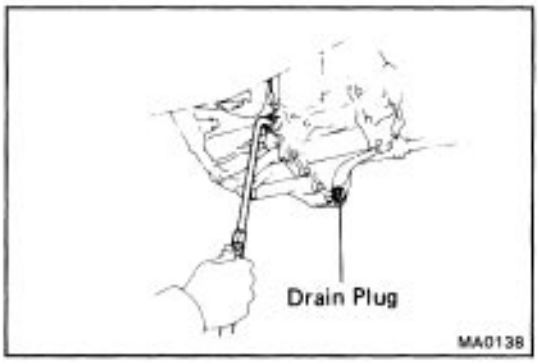

21. REPLACE MANUAL TRANSAXLE (TRANSMISSION AND DIFFERENTIAL) OIL

(a) Remove the engine under cover LH.
(b) Remove the drain plug and drain the oil.
(c) Reinstall the drain plug securely.
(d) Add new oil until it begins to run out of the filler hole.

Transaxle oil (M/T and differential):
Oil grade API GL–4 or GL–5
Viscosity SAE 75W–90
Capacity 2.6 liters (2.7 US qts, 2.3 Imp. qts)

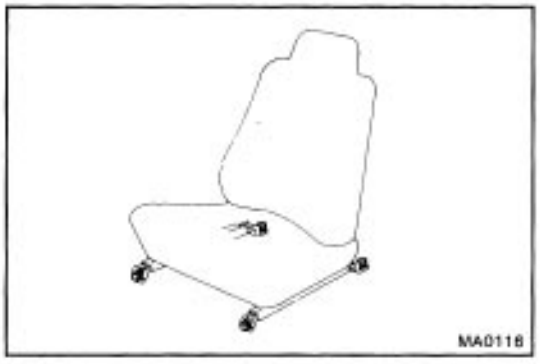

22. TIGHTEN BOLTS AND NUTS ON CHASSIS AND BODY

Tighten the following parts:

- Front seat mounting bolts
  Torque: 375 kg–cm (27 ft–lb, 37 N–m)

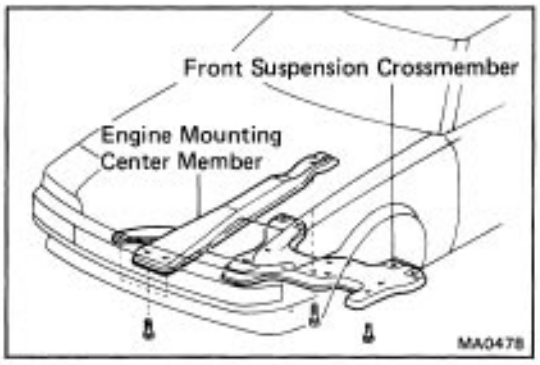

- Engine mounting center member–to–body mounting bolts
  Torque: 620 kg–cm (45 ft–lb, 61 N–m)
- Front suspension crossmember to body mounting bolt.
  Torque: 2,100 kg–cm (152 ft–lb, 206 N–m)

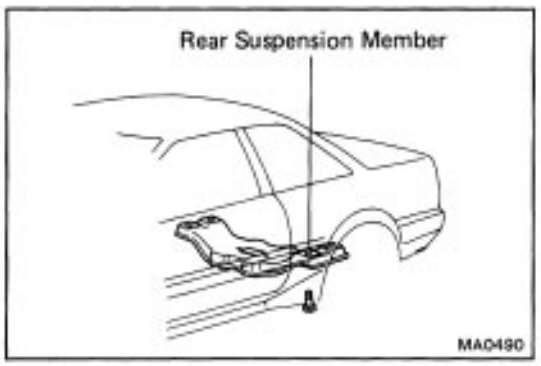

- Rear suspension member to body mounting bolt.
  Torque: 760 kg–cm (55 ft–lb, 75 N–m)

23. FINAL INSPECTION

(a) Check the operation of the body parts:

- Hood
  Auxiliary catch operates properly
  Hood locks securely when closed
- Front and rear doors
  Door locks operate properly
  Door close properly
- Luggage compartment door
  Door lock operates properly
- Seats
  Seat adjusts easily and locks securely in any position
  Front seat back locks securely in any position
  Folding–down rear seat backs lock securely

(b) Road test

- Check the engine and chassis for abnormal noise.
- Check that the vehicle does not wander or pull to one side.
- Check that the brakes work properly and do not drag.

(c) Be sure to deliver a clean car and especially check:

- Steering wheel
- Shift lever knob
- All switch knobs
- Door handles
- Seats

GENERAL MAINTENANCE

These are the maintenance and inspections items which are considered to be the owner's responsibility. They can be performed by the owner or he can have them done at a service shop. These items include those which should be checked on a daily basis, those which, in most cases, do not require
(special) tools and those which are considered to be reasonable for the owner to perform.
Items and procedures for general maintenance are as follows.

OUTSIDE VEHICLE

1. TIRES

(a) Check the pressure with a gauge. If necessary, adjust.

(b) Check for cuts, damage or excessive wear.

2. WHEEL NUTS

When checking the tires, check the nuts for looseness or for missing nuts. If necessary, tighten them.

3. TIRE ROTATION

It is recommended that tires be rotated every 7,500 miles (12,000 km).

4. WINDSHIELD WIPER BLADES

Check for wear or cracks whenever they do not wipe clean. If necessary, replace.

5. FLUID LEAKS

(a) Check underneath for leaking fuel, oil, water or other fluid.

(b) If you smell gasoline fumes or notice any leak, have the cause found and corrected.

6. DOORS AND ENGINE HOOD

(a) Check that all doors including the trunk lid and back door operate smoothly, and that all latches lock securely.

(b) Check that the engine hood secondary latch secures the hood from opening when the primary latch is released.

INSIDE VEHICLE

7. LIGHTS

(a) Check that the headlights, stop lights, taillights, turn signal lights, and other lights are all working.

(b) Check the headlight aim.

8. WARNING LIGHTS AND BUZZERS

Check that all warning lights and buzzers function properly.

9. HORN

Check that it is working.

10. WINDSHIELD GLASS

Check for scratches, pits or abrasions.

11. WINDSHIELD WIPER AND WASHER

(a) Check operation of the wipers and washer.

(b) Check that the wipers do not streak.

12. WINDSHIELD DEFROSTER

Check that air comes out from the defroster outlet when operating the heater or air conditioner.

13. REAR VIEW MIRROR

Check that it is mounted securely.

14. SUN VISORS

Check that they move freely and are mounted securely.

15. STEERING WHEEL

Check that it has specified freeplay. Be alert for changes in steering condition, such as hard steering, excessive freeplay or strange noise.

16. SEATS

(a) Check that all front seat controls such as seat adjusters, seatback recliner, etc. operate smoothly.

(b) Check that all latches lock securely in any position.

(c) Check that the locks hold securely in any latched position.

(d) Check that the head restraints move up and down smoothly and that the locks hold securely in any latched position.

(e) For folding–down rear seat backs, check that the latches lock securely.

17. SEAT BELTS

(a) Check that the seat belt system such as buckles, retractors and anchors operate properly and smoothly.

(b) Check that the belt webbing is not cut, frayed, worn or damaged.

18. ACCELERATOR PEDAL

Check the pedal for smooth operation and uneven pedal effort or catching.

19. CLUTCH PEDAL (See page CL–3)

Check the pedal for smooth operation.

Check that the pedal has the proper freeplay.

20. BRAKE PEDAL (See page BR–6)

(a) Check the pedal for smooth operation.

(b) Check that the pedal has the proper reserve distance and freeplay.

(c) Check the brake booster function.

21. BRAKES

At a safe place, check that the brakes do not pull to one side when applied.

22. PARKING BRAKE (See page BR–8)

(a) Check that the lever has the proper travel.

(b) On a safe incline, check that the vehicle is held securely with only the parking brake applied.

23. AUTOMATIC TRANSMISSION ”PARK” MECHANISM

(a) Check the lock release button of the selector lever for proper and smooth operation.

(b) On an safe incline, check that vehicle is held securely with the selector lever in ”P” position and all brakes released.

UNDER HOOD

24. WINDSHIELD WASHER FLUID

Check that there is sufficient fluid in the tank.

25. ENGINE COOLANT LEVEL

Check that the coolant level is between the ”FULL” and ”LOW” lines on the see–through reservoir.

26. RADIATOR AND HOSES

(a) Check that the front of the radiator is clean and not blocked with leaves, dirt or bugs.

(b) Check the hoses for cracks, kinds, rot or loose connections.

27. BATTERY ELECTROLYTE LEVEL

Check that the electrolyte level of all battery cells is between the upper and lower level lines on the case. If level is low, add distilled water only.

(Delco)

Check whether the green dot can be seen in the battery hydrometer. If dark, the battery is low.

Charge the battery. If clear, the electrolyte level is low. Replace the battery. (See page **CH–3**)

HINT: There is no need to add water during the entire service life of the battery.

28. BRAKE AND CLUTCH FLUID LEVELS

(a) Check that the brake fluid level is near the upper level line on the see–through reservoir.

(b) Check that the clutch fluid level is between the ”MAX” and ”MIN” lines on the see–through reservoir.

29. ENGINE DRIVE BELTS

Check all drive belts for fraying, cracks, wear or oiliness.

30. ENGINE OIL LEVEL

Check the level on the dipstick with the engine turned off.

31. POWER STEERING FLUID LEVEL

Check the level on the dipstick.

The level should be in the ”HOT” or ”COLD” range depending on the fluid temperature.

32. AUTOMATIC TRANSAXLE FLUID LEVEL

(a) Park the vehicle on a level surface.

(b) With the engine idling and the parking brake applied, shift the selector into all positions from ”P” to ”L”, and then shift into ”P”.

(c) Pull out the dipstick and wipe off the fluid with a clean rag. Reinsert the dipstick and check that the fluid level is in the ”HOT” range.

(d) Perform this check with the fluid at normal driving temperature (70 – 80˚C or 158 – 176˚F)

HINT: Wait until the engine cools down (about 30 mins.) before checking the fluid level after extended high speeds driving in hot weather, driving in heavy traffic or pulling a trailer.

33. TRANSFER FLUID LEVEL

(a) Pull out the dipstick and wipe it clean.

(b) Reinsert the dipstick–push it in as far as it will go.

(c) Pull the dipstick out and look at the oil level. If the level is different on the front and revers sides of the dipstick read the level which is lower.

HINT: Wait until the engine cools . down (about 30 mins.) before checking the fluid after extended high speed driving in hot weather driving in heavy traffic of pulling a trailer.

34. EXHAUST SYSTEM

Visually inspect for cracks, holes or loose supports.

If any change in the sound of the exhaust or smell of the exhaust fumes is noticed, have the cause located and corrected.

MANUAL TRANSAXLE

DESCRIPTION

- Transaxle types C50 and C52 are constant mesh synchronizers for forward gears, and a sliding mesh reverse gear.
- The input shaft is composed of the 1st and 2nd speed gears and the reverse drive gear, and the output shaft is composed of the drive gear (for use with the ring gear).
- The oil is as follows:
  API GL–4 or GL–5 SAE 75w–90 or 80W–90
- The illustrations below show the engagements of transaxle gears.

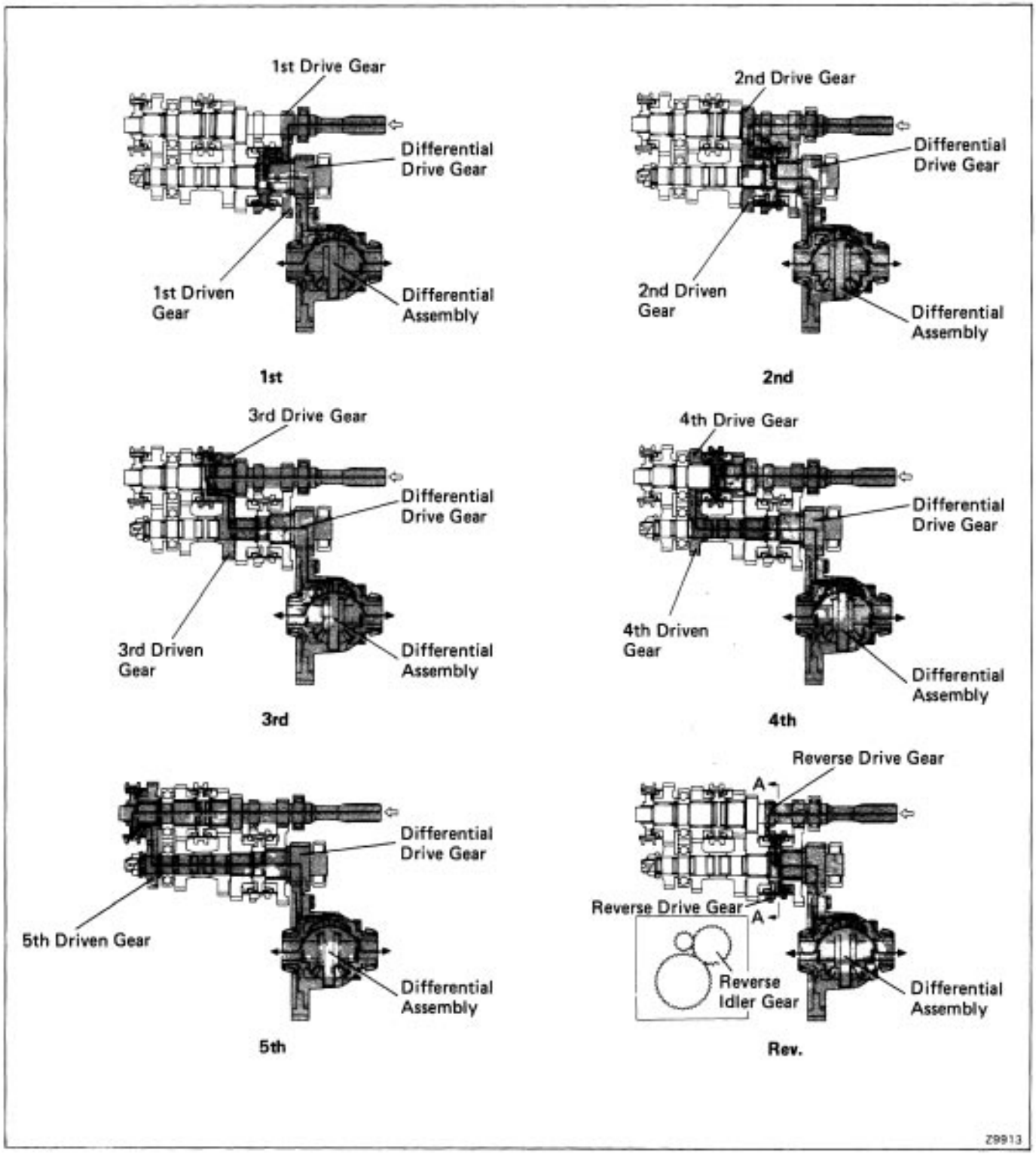

PRECAUTIONS

When working with FIPG material, you must be observe the following.

- Using a razor blade and gasket scraper, remove all the old packing (FIPG) material from the gasket surfaces.
- Thoroughly clean all components to remove all the loose material.
- Clean both sealing surfaces with a non–residue solvent.
- Apply the seal packing in approx. 1 mm (0.04 in.) bead along the sealing surface.
- Parts must be assembled within 10 minutes of application. Otherwise, the packing (FIPG) material must be removed and reapplied.

TROUBLESHOOTING

Problem	Possible cause	Remedy	Page
Noise	Transmission or differential faulty Wrong oil grade Oil level low	Disassemble and inspect transmission or differential Replace oil Add oil	MT–8
Oil leakage	Oil level too high Oil seal, 0–ring or gasket worn or damaged	Drain oil Replace oil seal, O–ring or gasket	MT–8 SA–18
Hard to shift or will not shift	Control cable faulty Transmission faulty	Replace control cable Disassemble and inspect transmission	MT–8
Jumps out of gear	Transmission faulty	Disassemble and inspect transmission	MT–8

REMOVAL AND INSTALLATION OF TRANSAXLE

Remove and install the parts as shown.

HINT: Oil grade : API GL–4 or GL–5
Viscosity: SAE 75W–90 or 80W–90
Capacity : 2.6 liters (2.7 US qts, 2.3 Imp. qts)

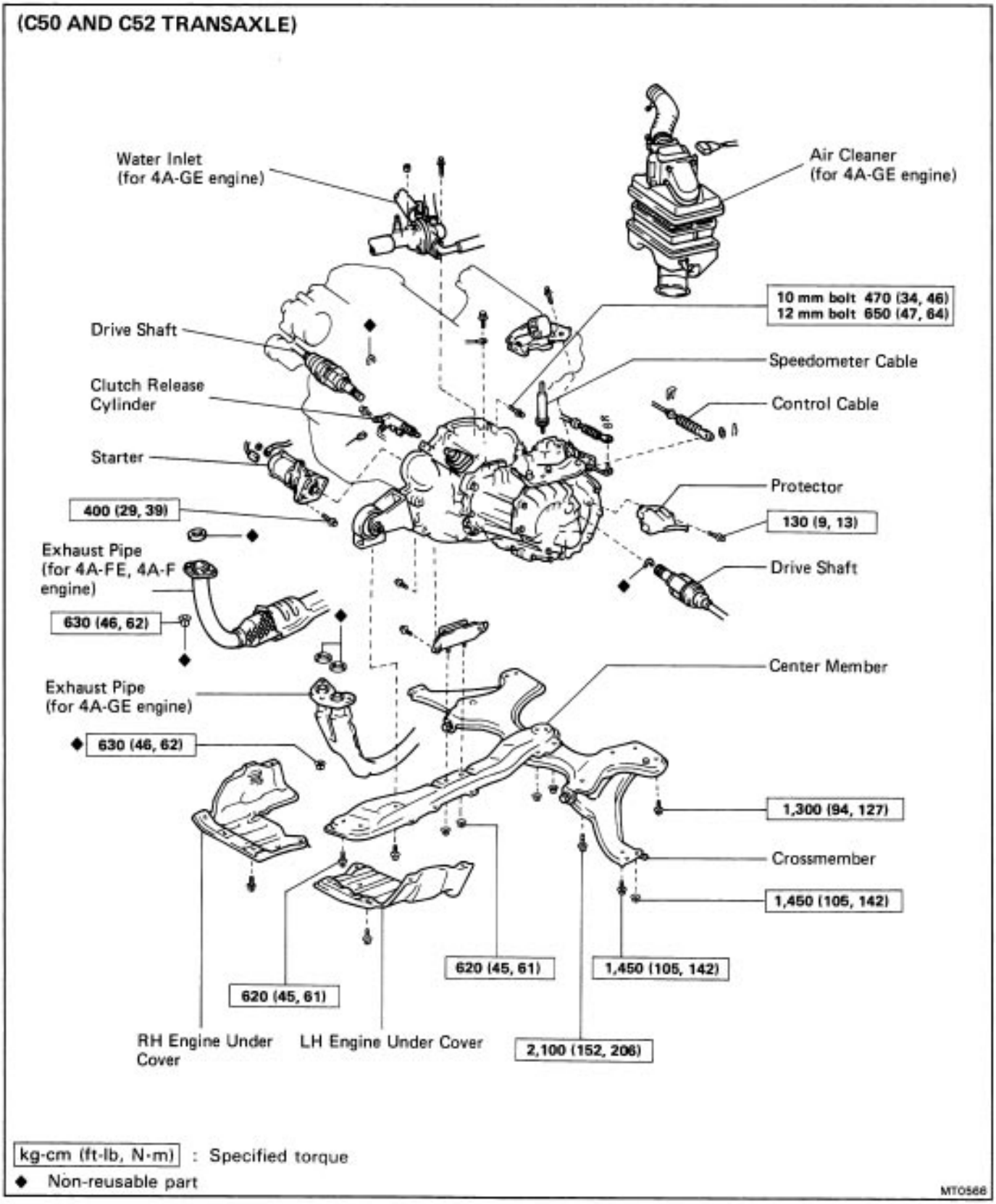

C50 AND C52 TRANSMISSIONS

COMPONENTS

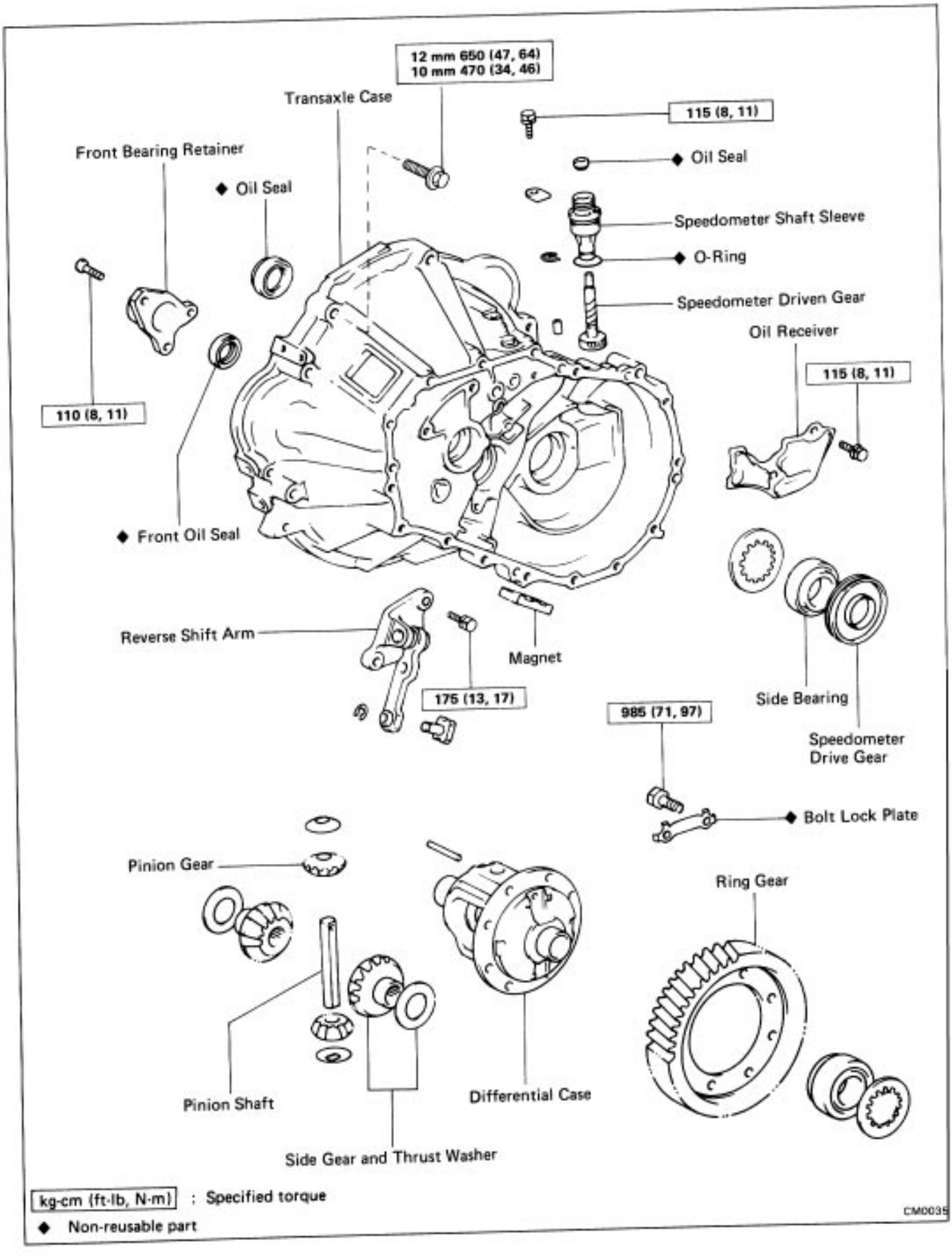

COMPONENTS (Cont'd)

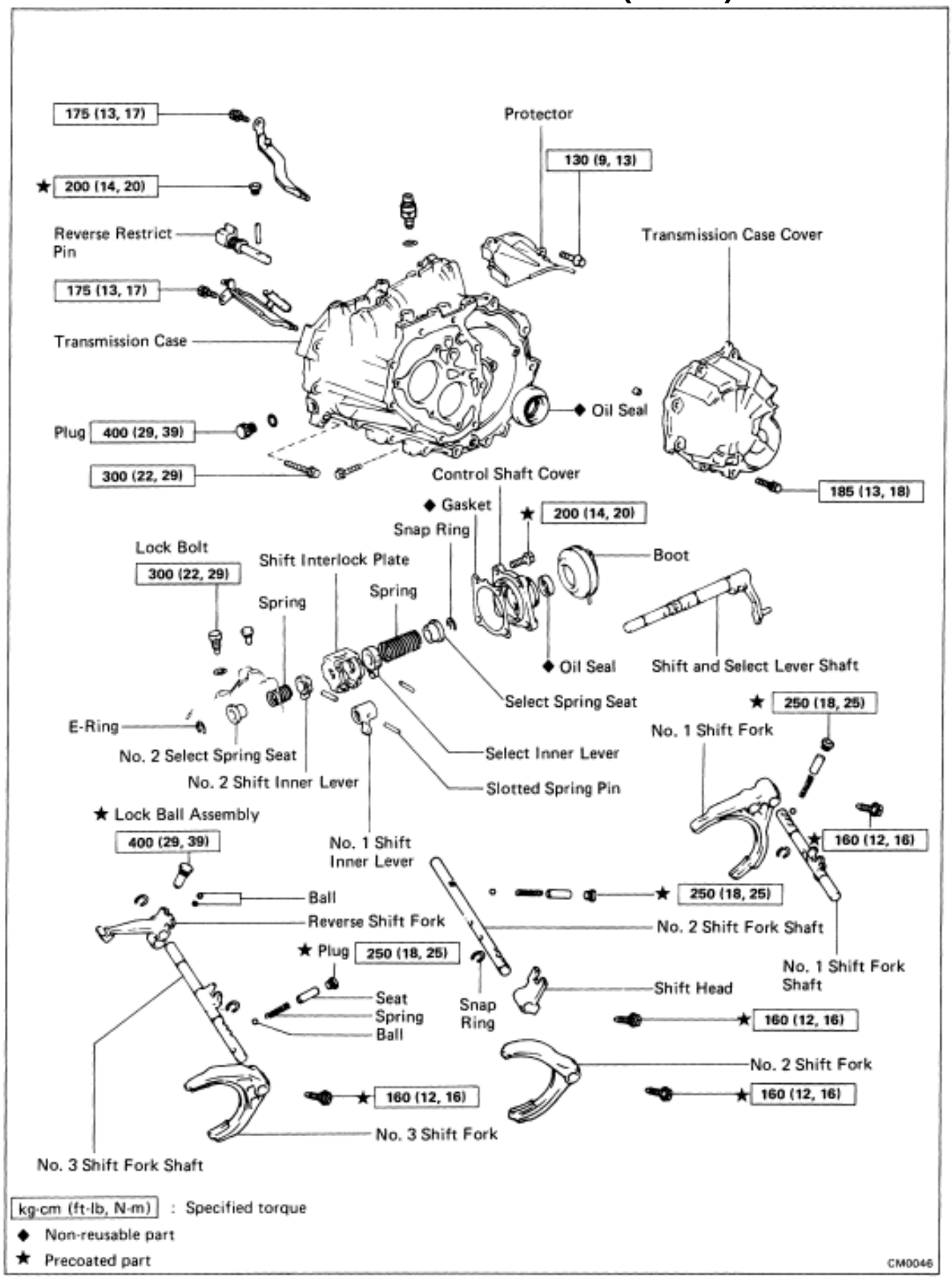

COMPONENTS (Cont'd)

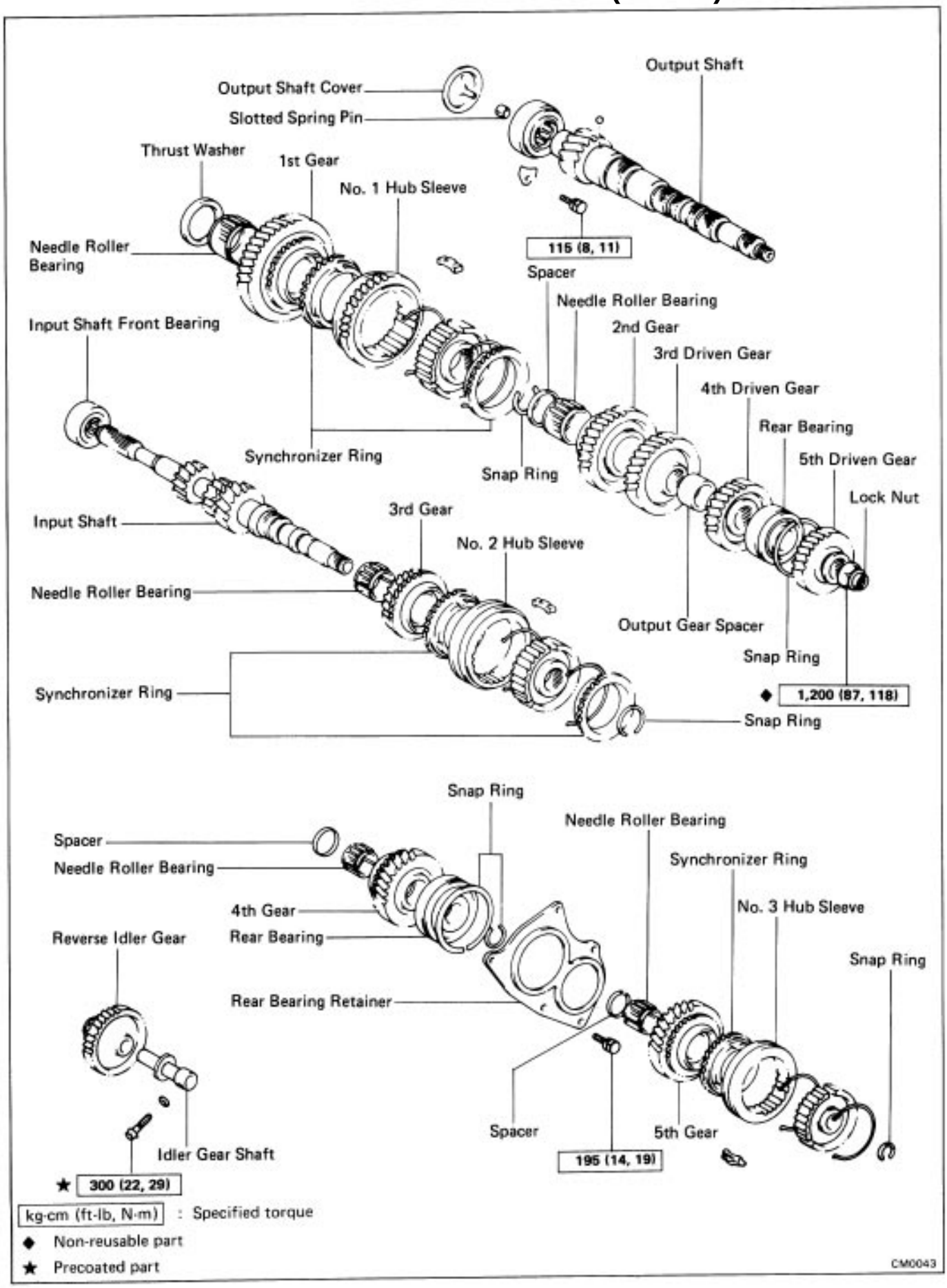

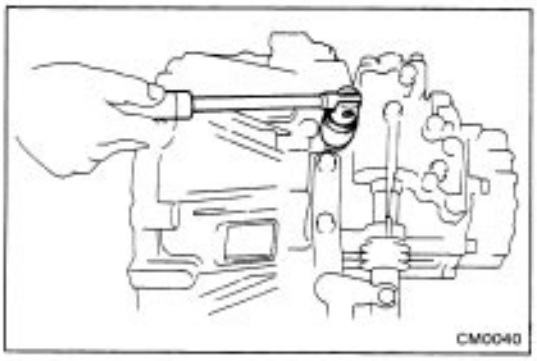

DISASSEMBLY OF TRANSMISSION

(See pages MT–5 to 7)

1. REMOVE RELEASE FORK, BEARING AND SPEEDOMETER DRIVEN GEAR

2. REMOVE BACK–UP LIGHT SWITCH

Remove the back–up light switch.

3. REMOVE FRONT BEARING RETAINER

Using a torx socket wrench, unscrew the three torx screws.

(Torx socket wrench T30 09042–00010)

4. REMOVE TRANSMISSION CASE COVER

5. MEASURE FIFTH GEAR THRUST CLEARANCE

Using a dial indicator, measure the thrust clearance.

Standard clearance: 0.10–0.57 mm (0.0039–0.0224 in.)

Maximum clearance: 0.65 mm (0.0256 in.)

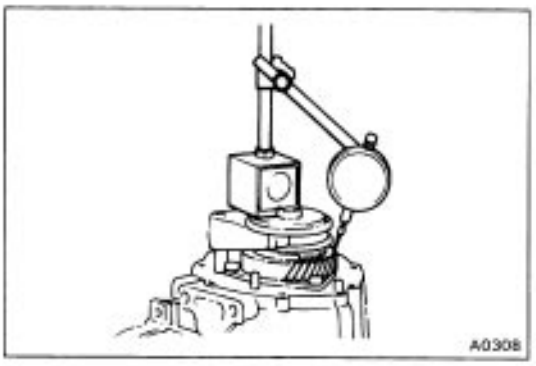

6. REMOVE SELECTING BELLCRANK

7. REMOVE LOCK BOLT

8. REMOVE SHIFT AND SELECT LEVER SHAFT ASSEMBLY

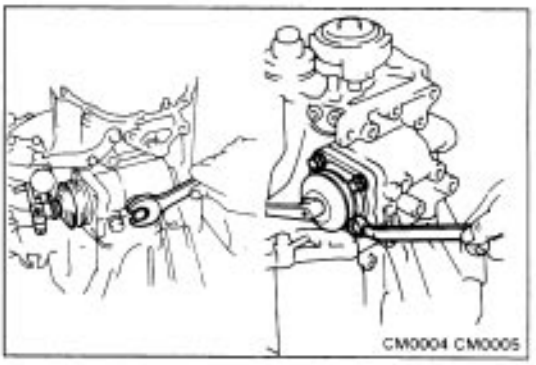

9. REMOVE LOCK NUT

(a) Engage the gear double meshing.

(b) Remove the lock nut.

(c) Disengage the gear double meshing.

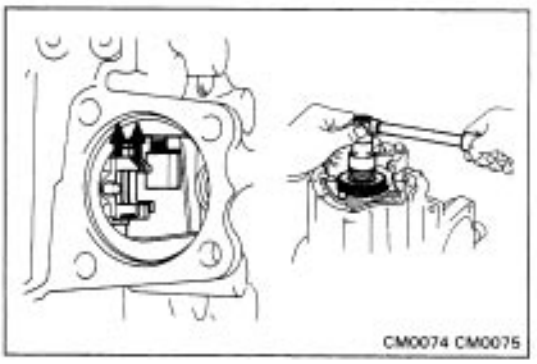

10. REMOVE NO.3 HUB SLEEVE ASSEMBLY AND NO.3 SHIFT FORK

(a) Using two screwdrivers and a hammer, tap out the snap ring.

(b) Remove the bolt from No.3 shift fork.

(c) Remove No.3 hub sleeve and shift fork.

(d) Using SST, remove the 5th gear, No.3 hub and synchronizer ring.

SST 09213–36020

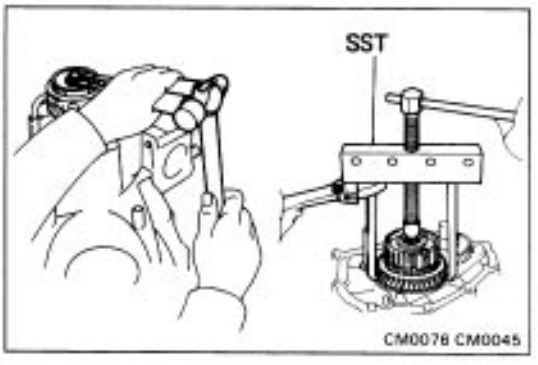

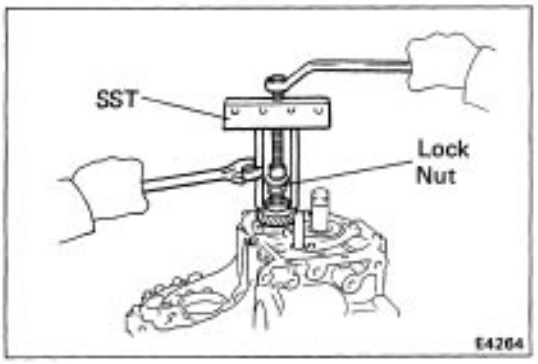

11. REMOVE NEEDLE ROLLER BEARING AND SPACER

12. REMOVE FIFTH DRIVEN GEAR

(a) Install the lock nut to the output shaft as shown.

(b) Using SST, remove the 5th driven gear.

SST 09213–36020

(c) Remove the lock nut.

13. REMOVE REAR BEARING RETAINER

14. REMOVE BEARING SNAP RINGS

Using snap ring pliers, remove the two snap rings.

15. REMOVE REVERSE IDLER GEAR SHAFT LOCK BOLT

16. REMOVE SNAP RING FROM NO.2 SHIFT FORK SHAFT

Using two screwdrivers and a hammer, tap out the snap ring.

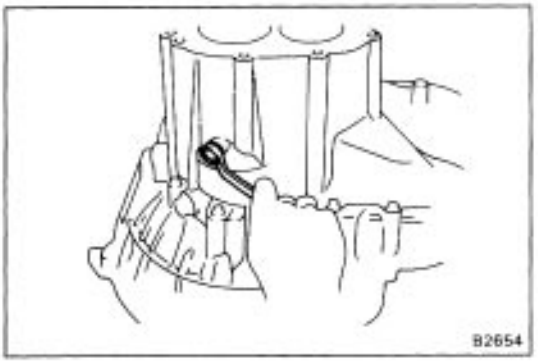

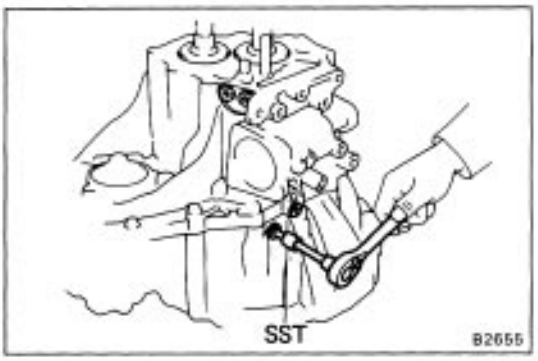

17. REMOVE PLUGS, SEATS, SPRINGS, BALLS AND LOCK BALL ASSEMBLY

(a) Using SST, remove the three plugs and lock ball assembly.

SST 09313–30021

(b) Using a magnetic finger, remove the three seats, springs and balls.

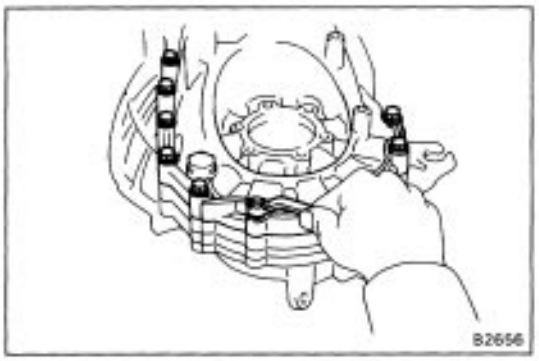

18. REMOVE TRANSMISSION CASE

Remove the sixteen bolts, and tap off the case with a plastic hammer.

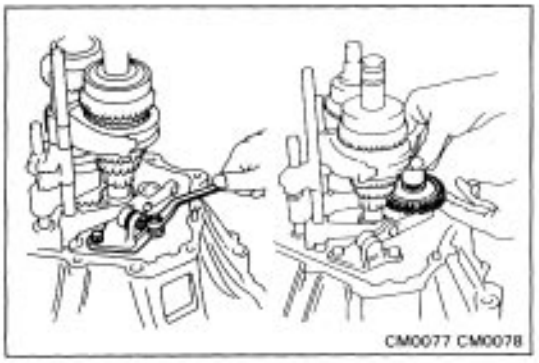

19. REMOVE REVERSE SHIFT ARM BRACKET

Remove the two bolts and pull off the bracket.

20. REMOVE REVERSE IDLER GEAR, THRUST WASHER AND SHAFT

Pull out the shaft.

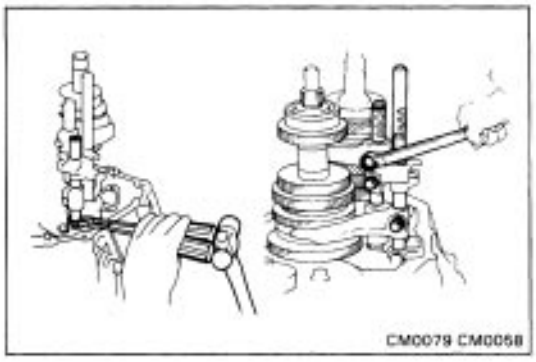

21. REMOVE SHIFT FORKS AND SHIFT FORK SHAFTS

(a) Using two screwdrivers and a hammer, tap out the three snap rings.

(b) Remove the three set bolts.

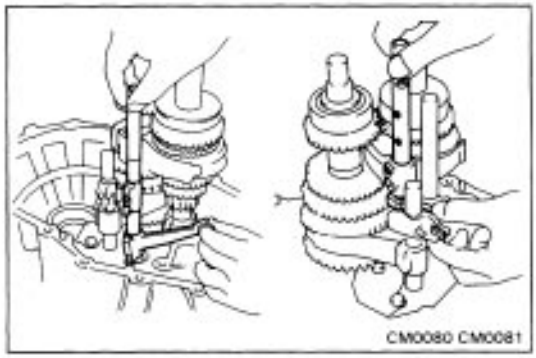

(c) Remove No–2 fork shaft and the shift head.

(d) Using a magnetic finger, remove the two balls.

(e) Remove No.3 fork shaft and the reverse shift fork.

(f) Pull out No–1 fork shaft.

(g) Remove No.1 and No.2 shift forks.

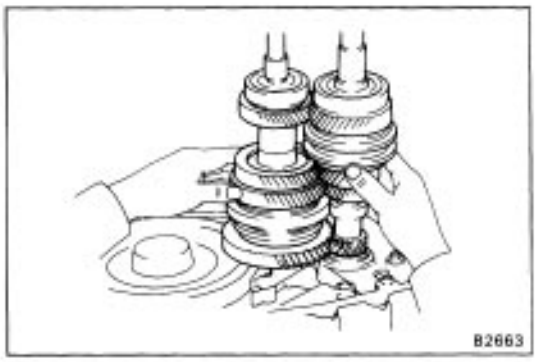

22. REMOVE INPUT AND OUTPUT SHAFTS TOGETHER FROM TRANSAXLE CASE

23. REMOVE DIFFERENTIAL ASSEMBLY

24. REMOVE MAGNET AND OIL RECEIVER

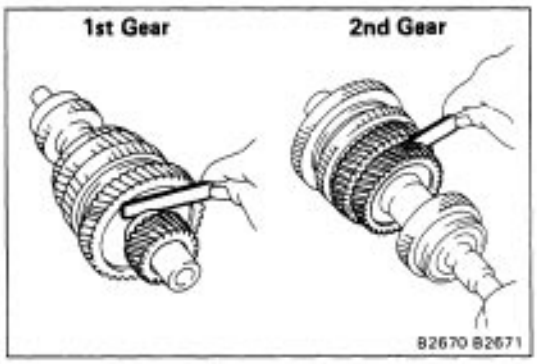

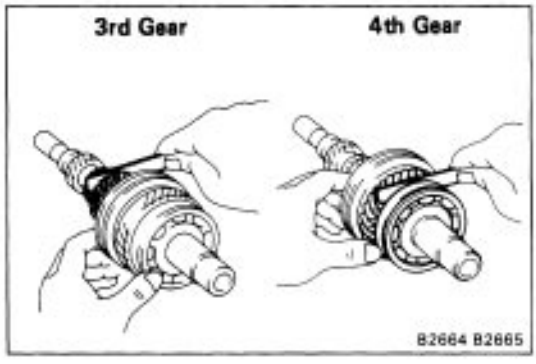

25. MEASURE EACH GEAR THRUST CLEARANCE AND OIL CLEARANCE

(a) Using a feeler gauge, measure the thrust clearance.

Standard clearance:

1st gear	**0.10–0.40 mm (0.0039–0.0157 in.)**
2nd gear	**0.10–0.45 mm (0.0039–0.0177 in.)**
3rd gear	**0.10–0.35 mm (0.0039–0.0138 in.)**
4th gear	**0.10–0.55 mm (0.0039–0.0217 in.)**

Maximum clearance:

1st gear	**0.45 mm (0.0177 in.)**
2nd gear	**0.50 mm (0.0197 in.)**
3rd gear	**0.40 mm (0.0157 in.)**
4th gear	**0.60 mm (0.0236 in.)**

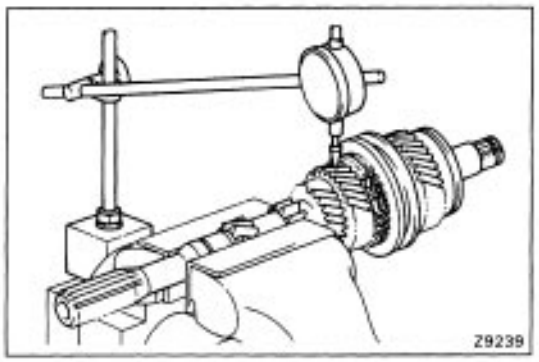

(b) Using a dial indicator, measure the oil clearance between the gear and input or output shaft with the needle roller bearing installed.

Standard clearance: 0.015–0.058 mm (0.0006–0.0023 in.)

Maximum clearance: 0.070 mm (0.0028 in.)

If the clearance exceeds the limit, replace the gear, needle roller bearing or shaft.

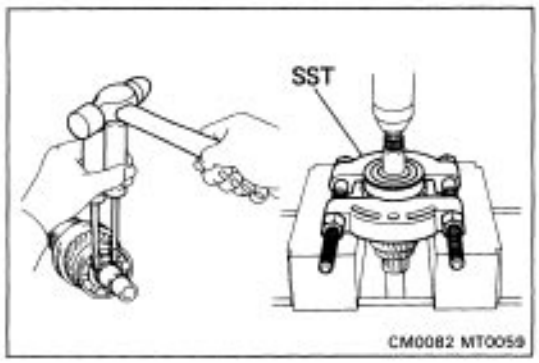

26. REMOVE SNAP RING, RADIAL BALL BEARING, FOURTH GEAR, NEEDLE ROLLER BEARINGS AND SYNCHRONIZER RING FROM INPUT SHAFT

(a) Using two screwdrivers and a hammer, tap out the snap ring.

(b) Using SST, press out the radial ball bearing.

SST 09950–00020

(c) Remove the 4th gear, needle roller bearings and synchronizer ring.

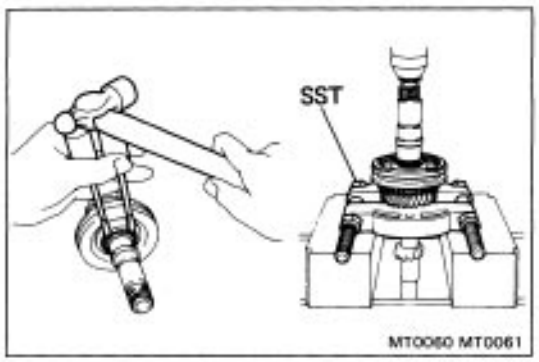

27. REMOVE SNAP RING, NO.2 HUB SLEEVE ASSEMBLY, THIRD GEAR, SYNCHRONIZER RING AND NEEDLE ROLLER BEARINGS

(a) Using two screwdrivers and a hammer, tap out the snap ring.

(b) Using SST and a press, remove No.2 hub sleeve, 3rd gear, synchronizer ring and needle roller bearings.

SST 09950–00020

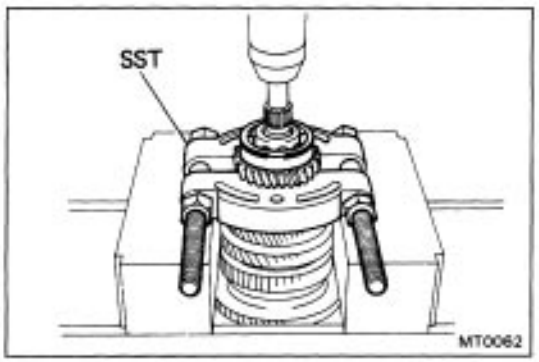

28. REMOVE RADIAL BALL BEARING, FOURTH DRIVEN GEAR AND SPACER FROM OUTPUT SHAFT

(a) Using SST and a press, remove the radial ball bearing and 4th driven gear.

SST 09950–00020

(b) Remove the spacer.

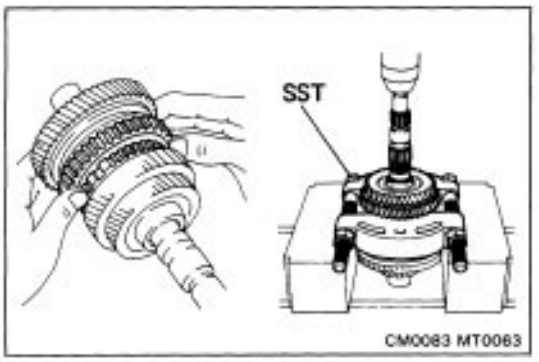

29. REMOVE THIRD DRIVEN GEAR, SECOND GEAR, NEEDLE ROLLER BEARING, SPACER AND SYNCHRONIZER RING

(a) Shift No. 1 hub sleeve into the 1st gear.

(b) Using SST and a press, remove the 3rd driven gear and 2nd gear.

SST 09950–00020

(c) Remove the needle roller bearing, spacer and synchronizer ring.

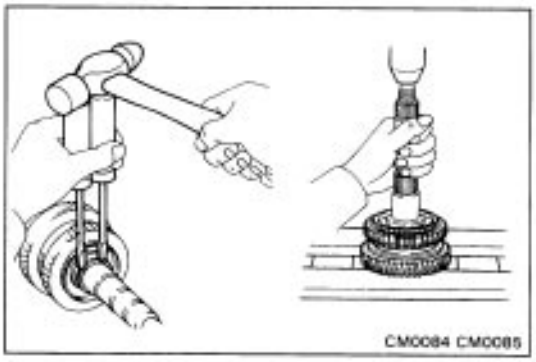

30. REMOVE SNAP RING, NO. 1 HUB SLEEVE ASSEMBLY, FIRST GEAR, SYNCHRONIZER RING, NEEDLE ROLLER BEARING, THRUST WASHER AND LOCKING BALL

(a) Using two screwdrivers and a hammer, tap out the snap ring.

(b) Using a press, remove No. 1 hub sleeve, 1st gear and synchronizer ring.

(c) Remove the needle roller bearing, thrust washer and locking ball.

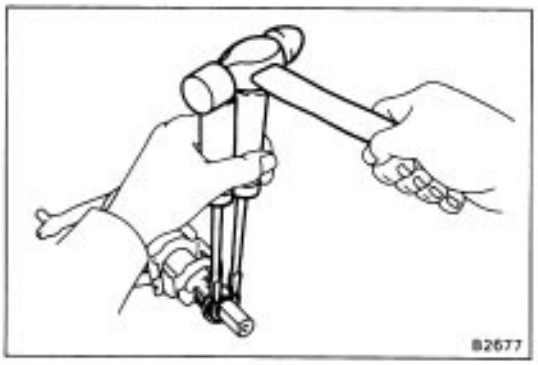

31. DISASSEMBLE SHIFT AND SELECT LEVER SHAFT ASSEMBLY

(a) Remove the E–ring and compression spring.

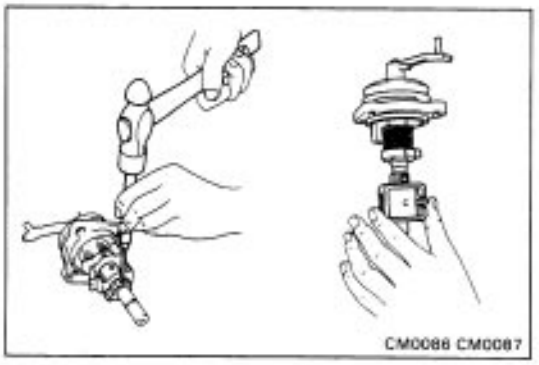

(b) Using a pin punch and hammer, drive out the slotted spring pins from No.1 and No.2 shift inner levers.

(c) Remove No.2 shift inner lever.

(d) Remove No. 1 shift inner lever and the shift interlock plate.

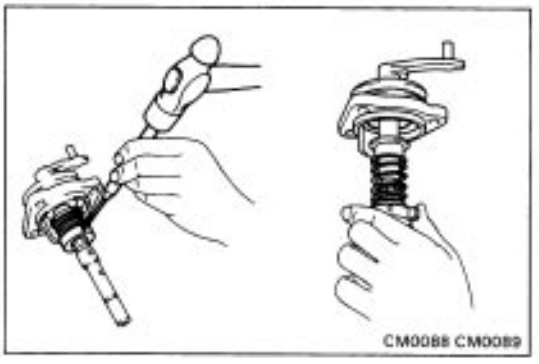

(e) Using a pin punch and hammer, drive out the slotted spring pin from the select inner lever.

(f) Remove the select inner lever, compression spring and spring seat.

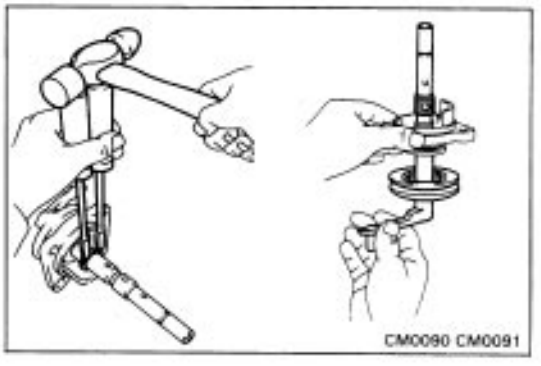

(g) Using two screwdrivers and a hammer, tap out the snap ring from the lever shaft.

(h) Remove the lever shaft and boot.

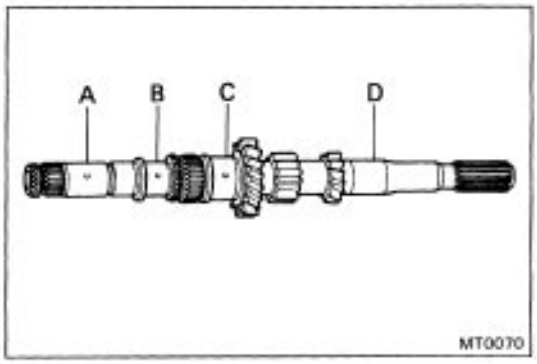

INSPECTION OF TRANSMISSION COMPONENTS

1. INSPECT INPUT SHAFT

(a) Using a micrometer, measure the outer diameter of the input shaft journal surface.

Minimum outer diameter:

Part A 24.870 mm (0.9791 in.)
B 26.470 mm (1.0421 in.)
C 30.970 mm (1.2193 in.)
D 24.970 mm (0.9831 in.)

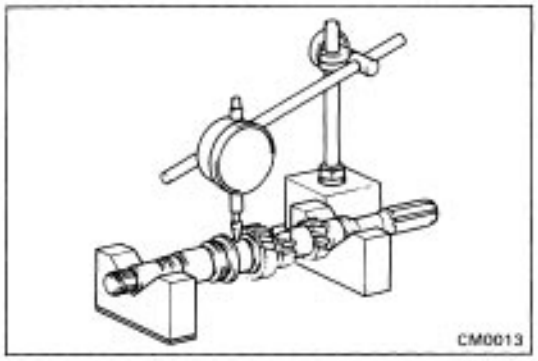

(b) Using a dial indicator, check the shaft runout.

Maximum runout: 0.05 mm (0.0020 in.)

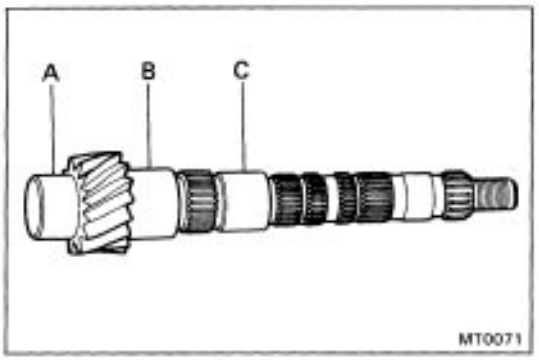

2. INSPECT OUTPUT SHAFT

(a) Using a micrometer, measure the outer diameter of the output shaft journal surface.

Minimum outer diameter:

Part A 32.970 mm (1.2980 in.)
B 37.970 mm (1.4949 in.)
C 31.970 mm 0.2587 in.)

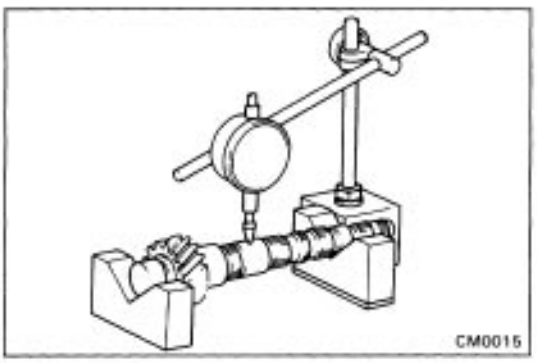

(b) Using a dial indicator, check the shaft runout.

Maximum runout: 0.05 mm (0.0020 in.)

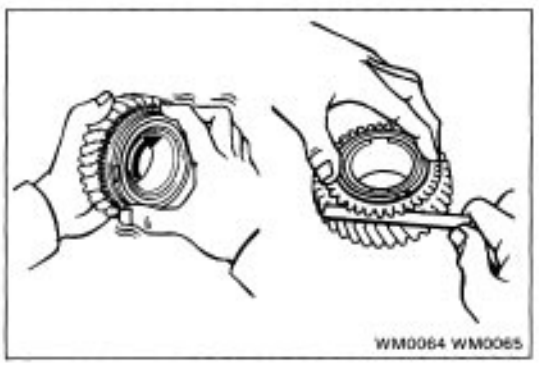

3. INSPECT SYNCHRONIZER RINGS

(a) Turn the ring and push it in to check the braking action.

(b) Measure the clearance between the synchronizer ring back and the gear spline end.

Minimum clearance: 0.6 mm (0.024 in.)

If the clearance is less than the limit, replace the synchronizer ring.

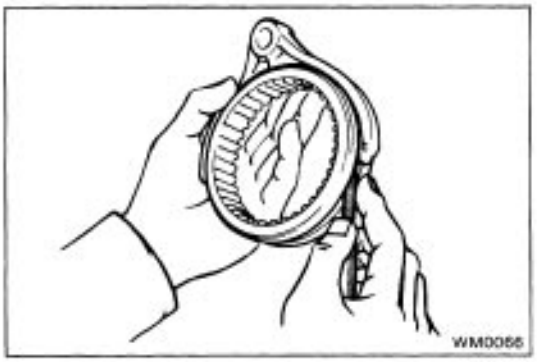

4. MEASURE CLEARANCE OF SHIFT FORKS AND HUB SLEEVES

Using a feeler gauge, measure the clearance between the hub sleeve and shift fork.

Maximum clearance: 1.0 mm (0.039 in.)

If the clearance exceeds the limit, replace the shift fork or hub sleeve.

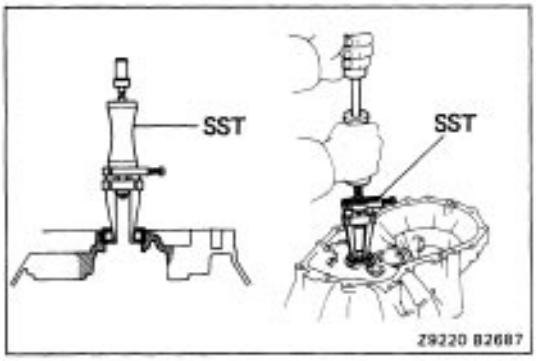

5. IF NECESSARY, REPLACE INPUT SHAFT FRONT BEARING

(a) Using SST, pull out the bearing.
SST 09308–00010

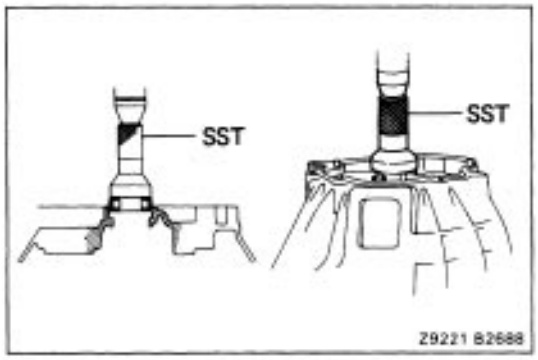

(b) Using SST, press in a new bearing.
SST 09310–35010

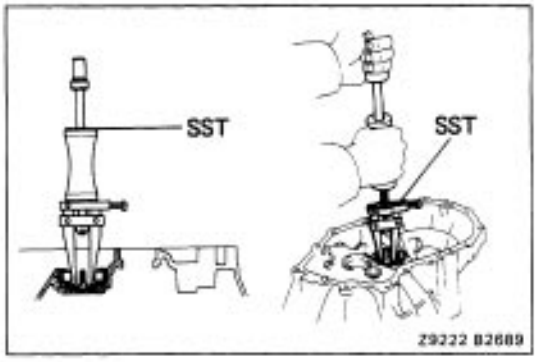

6. IF NECESSARY, REPLACE OUTPUT SHAFT FRONT BEARING

(a) Remove the bolt and bearing lock plate.
(b) Using SST, pull out the bearing.
SST 09308–00010

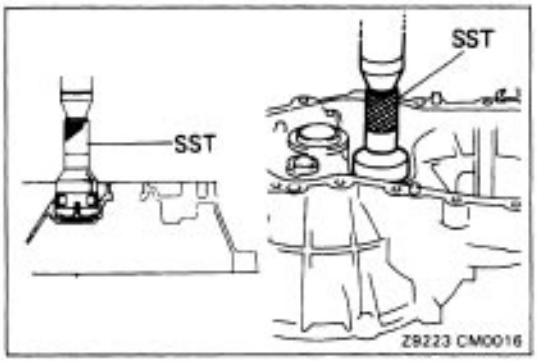

(c) Using SST, press in a new bearing.
SST 09310–35010
(d) Install the bearing lock plate and torque the bolt.
Torque: 115 kg–cm (8 ft–lb, 11 N–m)

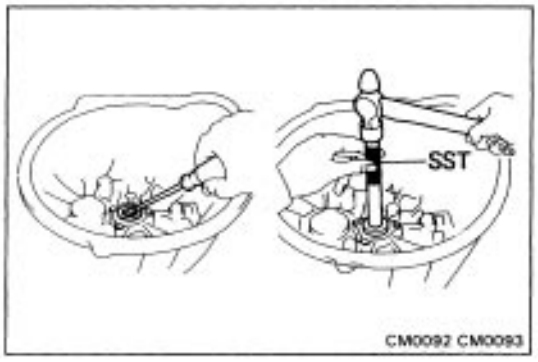

7. IF NECESSARY, REPLACE INPUT SHAFT FRONT OIL SEAL

(a) Using a screwdriver, pry out the oil seal.
(b) Using SST, drive in a new oil seal.
SST 09608–12010 (09608–00020, 09608–00080)
(c) Coat the lip of the oil seal with MP grease.

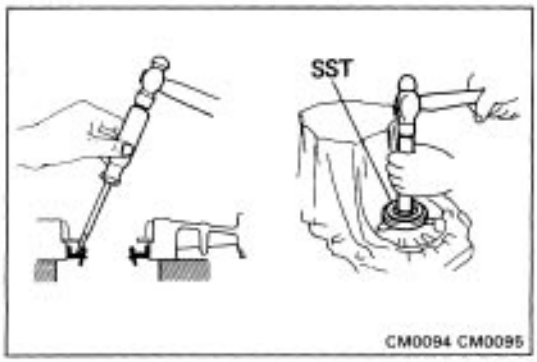

8. IF NECESSARY, REPLACE LH SIDE OIL SEAL

(a) Drive out the oil seal with a screwdriver.
(b) Using SST, drive in a new oil seal until its surface is flush with the case surface.
SST 09350–32014 (09351–32111, 09351–32130)
(c) Coat the lip of the oil seal with MP grease.

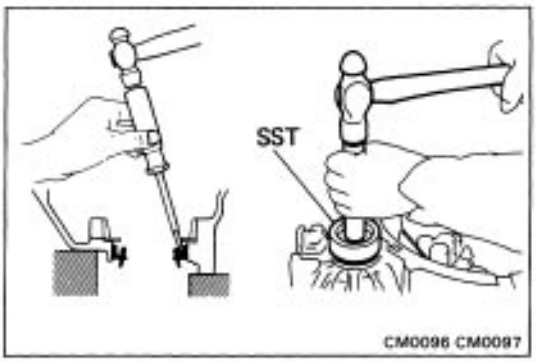

9. IF NECESSARY, REPLACE RH SIDE OIL SEAL

(a) Drive out the oil seal with a screwdriver.
(b) Using SST, drive in a new oil seal until its surface is flush with the case surface.
SST 09350–32014 (09351–32130, 09351–32150)
(c) Coat the lip of the oil seal with MP grease.

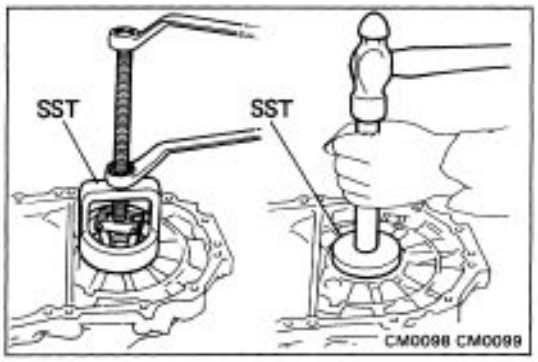

10. IF NECESSARY, REPLACE LH OUTER RACE OF SIDE BEARING

(a) Using SST, pull out the outer race and shim.
SST 09612–65014
(b) Place the shim into the case.
(c) Using SST, drive in a new outer race.
SST 09608–20012 (09608–03020, 09608–03090)

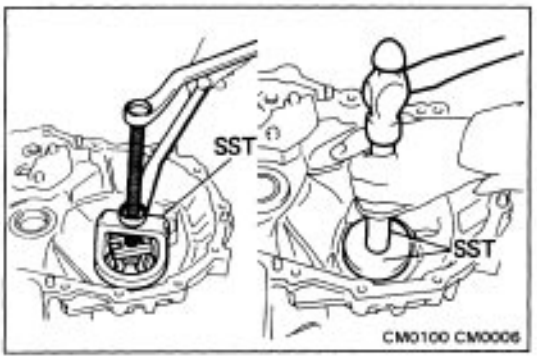

11. IF NECESSARY, REPLACE RH OUTER RACE OF SIDE BEARING

(a) Using SST, pull out the outer race and shim.
SST 09612–65014
(b) Place the shim into the case.
(c) Using SST, drive in a new outer race.
SST 09608–20012 (09608–03020, 09608–03090)

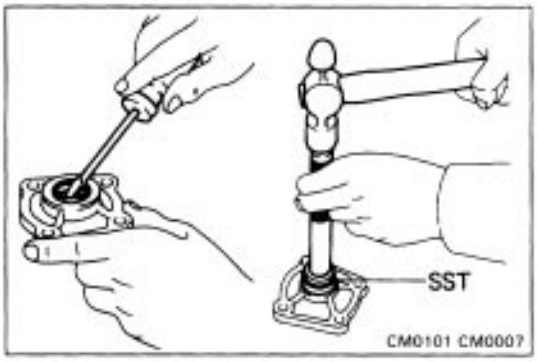

12. IF NECESSARY, REPLACE CONTROL SHAFT COVER OIL SEAL

(a) Using a screwdriver, pry out the oil seal.
(b) Using SST, drive in a new oil seal.
SST 09608–20012 (09608–03020, 09608–00080)
(c) Coat the lip of the oil seal with MP grease.

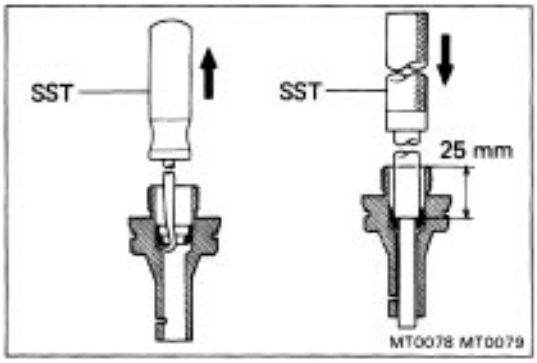

13. IF NECESSARY, REPLACE SPEEDOMETER DRIVEN GEAR OIL SEAL

(a) Using SST, pull out the oil seal.
SST 09921–00010
(b) Using SST, drive in a new oil seal.
SST 09201–60011
Drive in depth: 25 mm (0.98 in.)
(c) Coat the lip of the oil seal with MP grease.

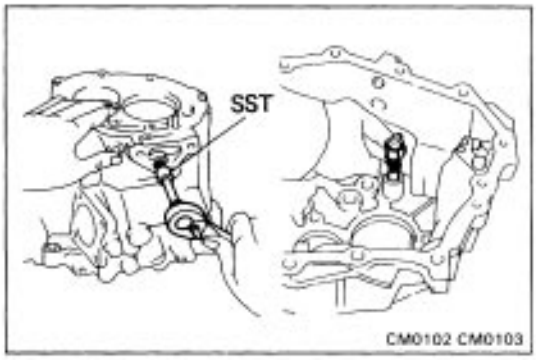

14. IF NECESSARY, REPLACE REVERSE RESTRICT PIN

(a) Using SST, remove the reverse restrict holder.
SST 09313–30021
(b) Using a pin punch and hammer, drive out the slotted spring pin.
(c) Replace the reverse restrict pin.
(d) Drive in the slotted spring pin.
(e) Using SST, install the reverse restrict holder.
SST 09313–30021
Torque: 200 kg–cm (14 ft–lb, 20 N–m)

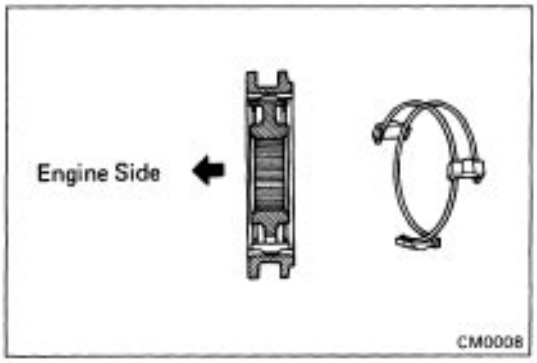

ASSEMBLY OF TRANSMISSION

(See pages MT–5 to 7)

1. INSERT NO.2 CLUTCH HUB INTO HUB SLEEVE

(a) Install the clutch hub and shifting keys to the hub sleeve.

(b) Install the shifting key springs under the shifting keys.

NOTICE: Install the key springs positioned so that their end gaps are not in line.

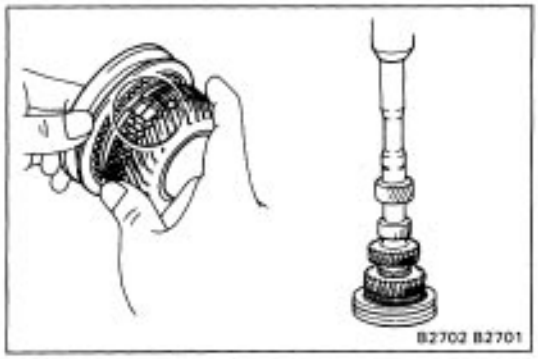

2. INSTALL THIRD GEAR, NEEDLE ROLLER BEARINGS, SYNCHRONIZER RING AND NO.2 HUB SLEEVE ASSEMBLY TO INPUT SHAFT

(a) Apply gear oil to the needle roller bearings.

(b) Place the synchronizer ring on the gear and align the ring slots with the shifting keys.

(c) Using a press, install the 3rd gear and No. 2 hub sleeve.

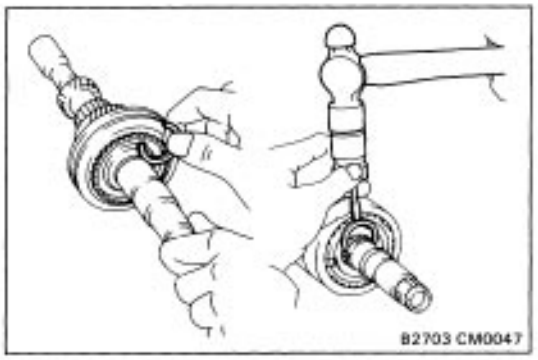

3. INSTALL SNAP RING

Select a snap ring that will allow minimum axial play and install it on the shaft.

Mark	Thickness mm(in.)	Mark	Thickness mm (in.)
0	2.30 (0.0906)	3	2.48 (0.0976)
1	2.36 (0.0929)	4	2.54 (0.1000)
2	2.42 (0.0953)	5	2.60 (0.1024)

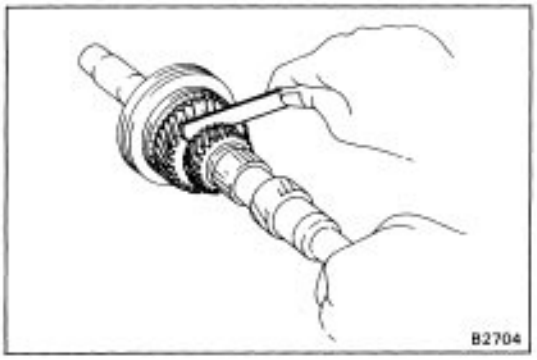

4. MEASURE THIRD GEAR THRUST CLEARANCE

Using a feeler gauge, measure the 3rd gear thrust clearance.

Standard clearance: 0.10–0.35 mm (0.0039–0.0138 in.)

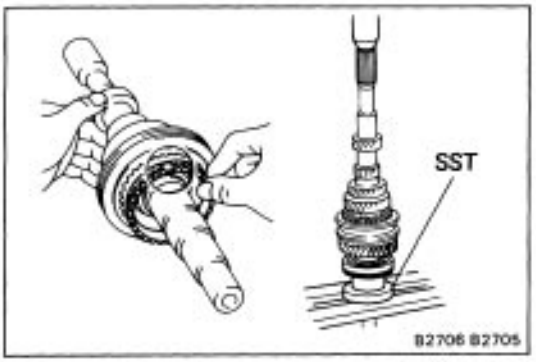

5. INSTALL SYNCHRONIZER RING, NEEDLE ROLLER BEARINGS, SPACER, FOURTH GEAR AND RADIAL BALL BEARING

(a) Apply gear oil to the needle roller bearings.

(b) Place the synchronizer ring on the gear and align the ring slots with the shifting keys.

(e) Using SST, press in the radial ball bearing.

SST 09608–12010 (09608–00070)

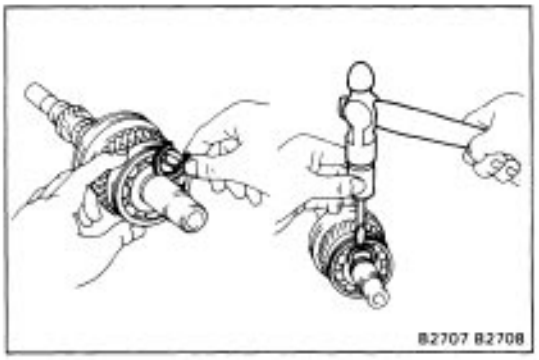

6. INSTALL SNAP RING

Select a snap ring that will allow minimum axial play and install it on the shaft.

Mark	Thickness mm(in.)	Mark	Thickness mm(in.)
A	2.29 (0.0902)	D	2.47 (0.0972)
B	2.35 (0.0925)	E	2.53 (0.0996)
C	2.41 (0.0949)	F	2.59 (0.1020)

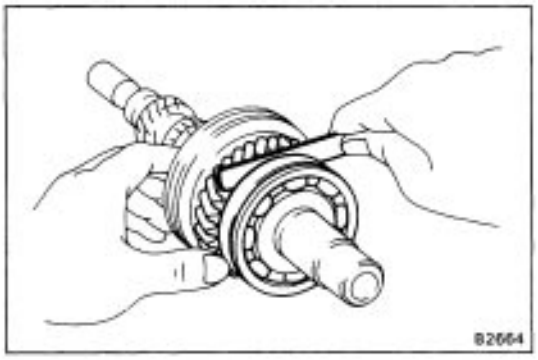

7. MEASURE FOURTH GEAR THRUST CLEARANCE

Using a feeler gauge, measure the 4th gear thrust clearance.

Standard clearance: 0.10 – 0.55 mm (0.0039–0.0217 in.)

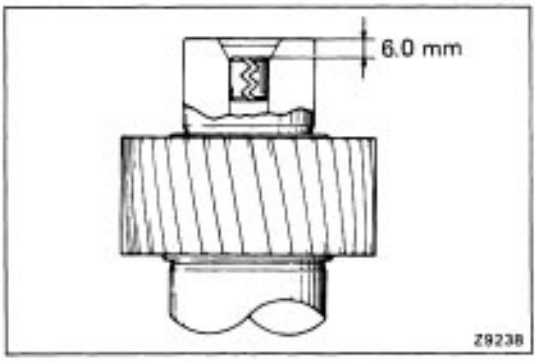

8. IF OUTPUT SHAFT WAS REPLACED, DRIVE IN SLOTTED SPRING PIN

If the output shaft was replaced, drive the slotted spring pin in the output shaft to a depth of 6.0 mm (0.236 in.).

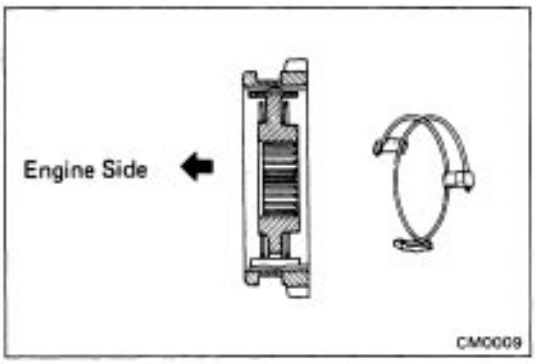

9. INSERT NO. 1 CLUTCH HUB INTO HUB SLEEVE

(a) Install the clutch hub and shifting keys to the hub sleeve.

(b) Install the shifting key springs under the shifting keys.

NOTICE: Install the key springs positioned so that their end gaps are not in line.

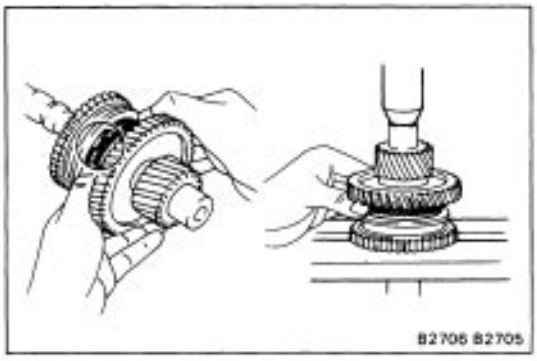

10. INSTALL THRUST WASHER, FIRST GEAR, NEEDLE ROLLER BEARING, SYNCHRONIZER RING AND NO. 1 HUB SLEEVE TO OUTPUT SHAFT

(a) Install the locking ball in the shaft.

(b) Fit the thrust washer groove securely over the locking ball when installing the thrust washer on the shaft.

(c) Apply gear oil to the needle roller bearing.

(d) Place the synchronizer ring on the gear and align the ring slots with the shifting keys.

(e) Using a press, install the 1st gear and No. 1 hub sleeve.

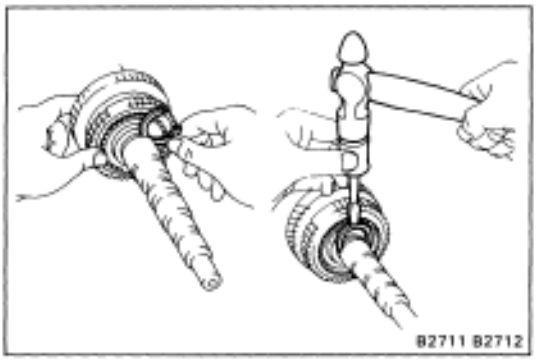

11. INSTALL SNAP RING

Select a snap ring that will allow minimum axial play and install it on the shaft.

Mark	Thickness mm(in.)	Mark	Thickness mm(in.)
A	2.50 (0.0984)	D	2.68 (0.1055)
B	2.56 (0.1008)	E	2.74 (0.1079)
C	2.62 (0.1031)	F	2.80 (0.1102)

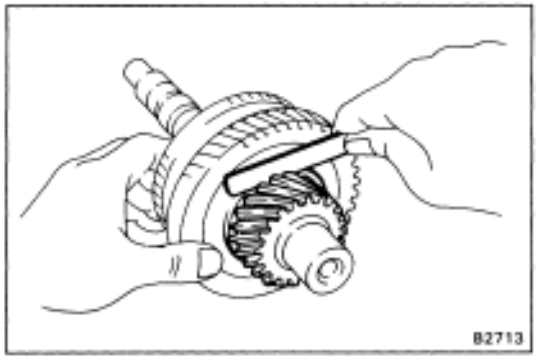

12. MEASURE FIRST GEAR THRUST CLEARANCE

Using a feeler gauge, measure the 1st gear thrust clearance.

Standard clearance: 0.10–0.40 mm (0.0039–0.0157 in.)

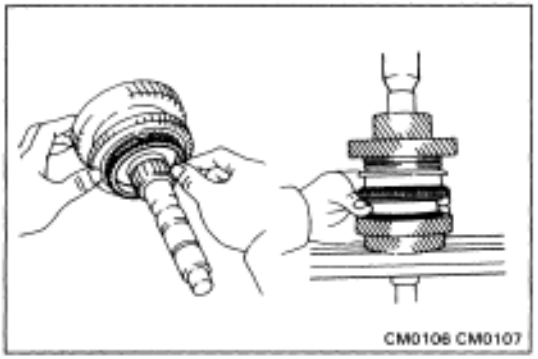

13. INSTALL SPACER, SYNCHRONIZER RING, SECOND GEAR, NEEDLE ROLLER BEARING AND THIRD DRIVEN GEAR

(a) Install the spacer.
(b) Place the synchronizer ring on the gear and align the ring slots with the shifting keys.
(c) Apply gear oil to the needle roller bearing.
(d) Install the 2nd gear.
(e) Using a press, install the 3rd driven gear.

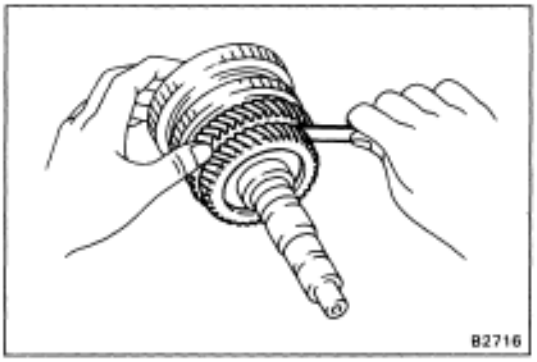

14. MEASURE SECOND GEAR THRUST CLEARANCE

Using a feeler gauge, measure the 2nd gear thrust clearance.

Standard clearance: 0.10–0.45 mm (0.0039–0.0177 in.)

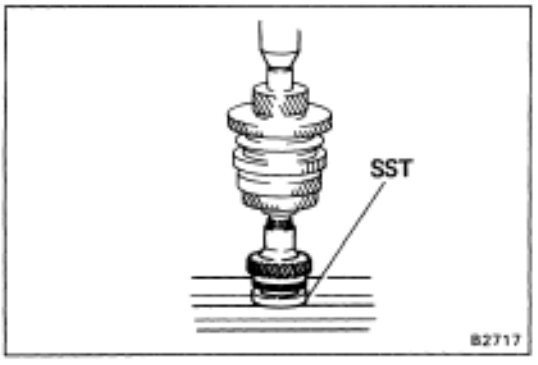

15. INSTALL OUTPUT GEAR SPACER, FOURTH DRIVEN GEAR AND RADIAL BALL BEARING

(a) Install the spacer.
(b) Using SST, press in the 4th driven gear and bearing.
SST 09608–12010 (09608–00070)

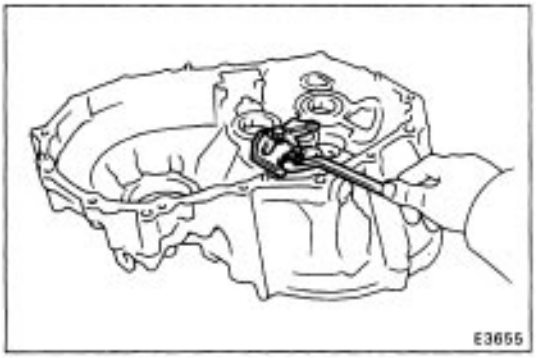

16. INSTALL MAGNET

17. INSTALL OIL RECEIVER

Install the oil receiver with the two bolts.

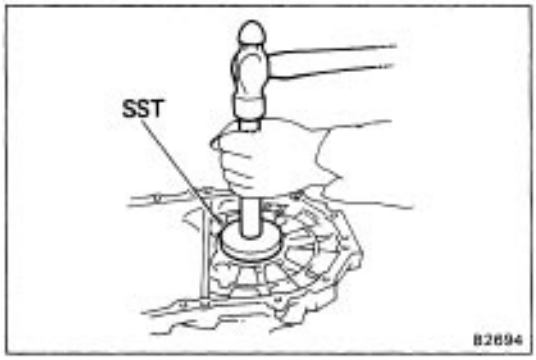

18. ADJUST DIFFERENTIAL SIDE BEARING PRELOAD

(a) Install the thinnest shim into the transmission case.

(b) Using SST, drive in the outer race of the side bearing.

SST 09608–20012 (09608–03020, 09608–03090)

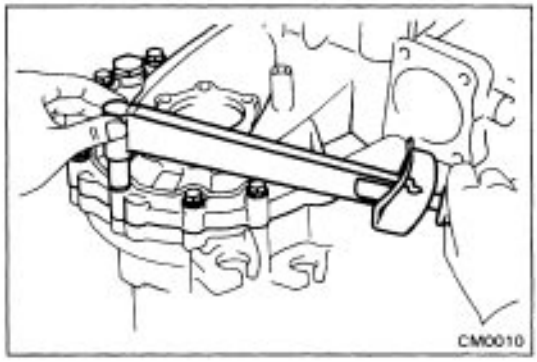

(c) Install the differential to the transaxle case.

(d) Install the transmission case.

(e) Install and torque the case bolts.

Torque: 300 kg–cm (22 ft–lb, 29 N–m)

(f) Using SST and torque meter, measure the preload.

SST 09564–32011

Preload (starting):

New bearing 8–16 kg–cm
(6.9–13.9 in.–lb, 0.8–1.6 N–m)

Reused bearing 5–10 kg–cm
(4.3–8.7 in.–lb, 0.5–1.0 N–m)

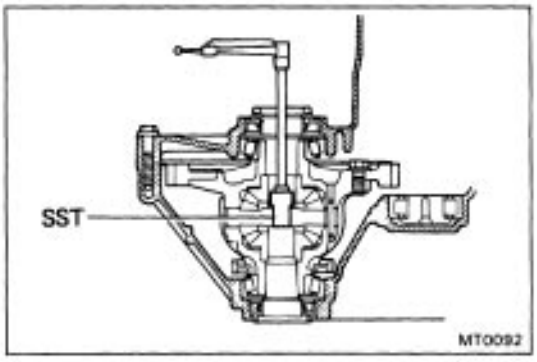

If the preload is not within specification, remove the transmission case side outer race of the side bearing with SST.

(See step 10 on page MT–15)

Reselect an adjusting shim.

HINT: The preload will change about 3–4 kg–cm (2.6–3.5 in. –lb, 0.3–0.4 N–m) with each shim thickness.

Mark	Thickness mm(in.)	Mark	Thickness mm (in.)
A	2.10 (0.0827)	L	2.60 (0.1024)
B	2.15 (0.0846)	M	2.65 (0.1043)
C	2.20 (0.0866)	N	2.70 (0.1063)
D	2.25 (0.0886)	P	2.75 (0.1083)
E	2.30 (0.0906)	Q	2.80 (0.1102)
F	2.35 (0.0925)	R	2.85 (0.1122)
G	2.40 (0.0945)	S	2.90 (0.1142)
H	2.45 (0.0965)	T	2.95 (0.1161)
J	2.50 (0.0984)	U	3.00 (0.1181)
K	2.55 (0.1004)		

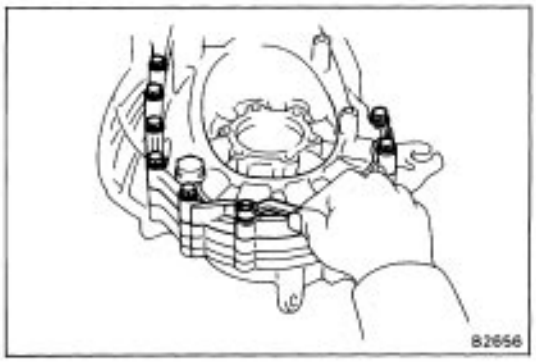

19. REMOVE TRANSMISSION CASE

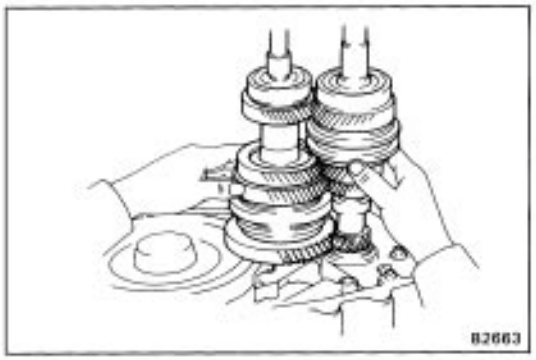

20. INSTALL INPUT AND OUTPUT SHAFTS

Install the input and output shafts together.

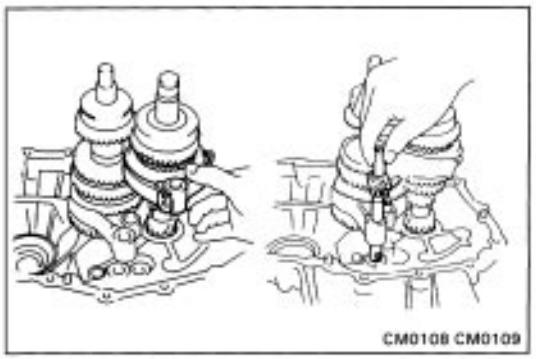

21. INSTALL SHIFT FORKS AND SHIFT FORK SHAFTS

(a) Place No. 1 and No. 2 shift forks into the groove of No. 1 and No.2 hub sleeves.

(b) Insert No.1 fork shaft into No.1 shift fork hole.

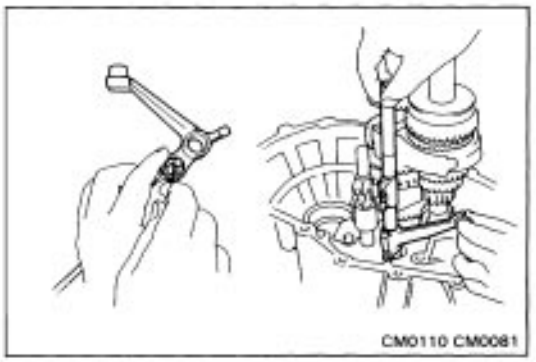

(c) Insert the two interlock balls into the reverse shift fork hole.

(d) Install No.3 fork shaft and the reverse shift fork.

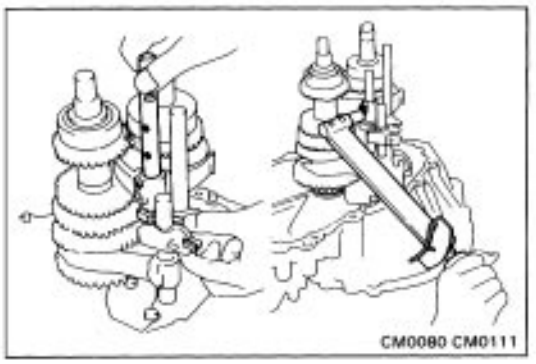

(e) Install No.2 fork shaft and the shift head.

(f) Apply sealant to the bolt threads.

Sealant: Part No. 08833–00070, Adhesive 1324, THREE BOND 1324 or equivalent

(g) Install the three bolts.

Torque: 160 kg–cm (12 ft–lb, 16 N–m)

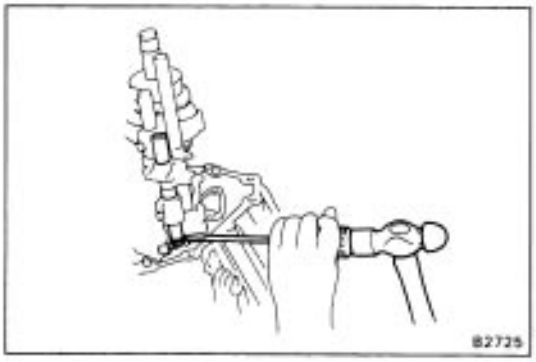

(h) Using a screwdriver and hammer, install the three snap rings.

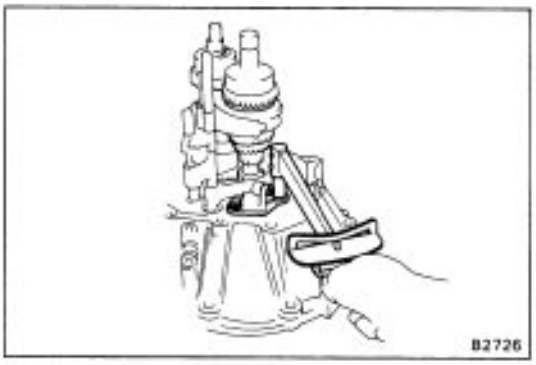

22. INSTALL REVERSE SHIFT ARM

(a) Put the reverse shift fork pivot into the reverse shift arm and install the reverse shift arm to the transaxle case.

(b) Install and torque the bolts.

Torque: 175 kg–cm (13 ft–lb, 17 N–m)

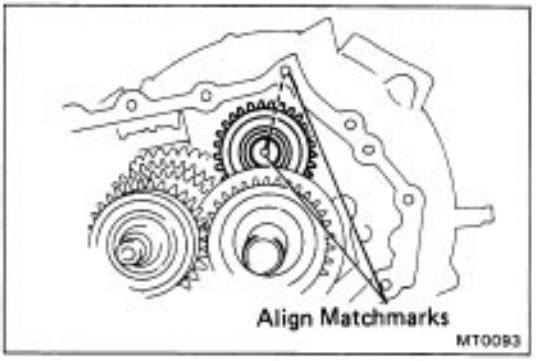

23. INSTALL REVERSE IDLER GEAR AND SHAFT

Install the reverse idler gear and shaft as shown.

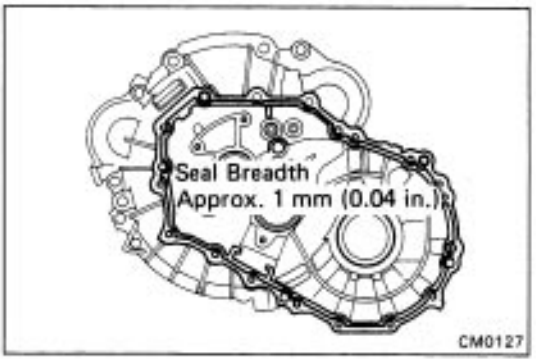

24. INSTALL TRANSMISSION CASE

(a) Remove any packing material and be careful not to drop oil on the contacting surfaces of the transmission case or transaxle case.

(b) Apply seal packing to the transmission case as shown.

Seal packing: Part No.08826–00090, THREE BOND 1281 or equivalent

HINT: Install the transmission case as soon as the seal packing is applied.

(c) Install and torque the sixteen bolts.

Torque: 300 kg–cm (22 ft–lb, 29 N–m)

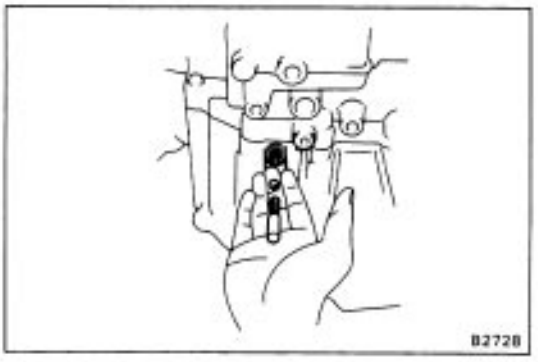

25. INSTALL BALLS, SPRINGS, SEATS, PLUGS AND LOCK BALL ASSEMBLY

(a) Insert the balls, springs and seats into the holes.

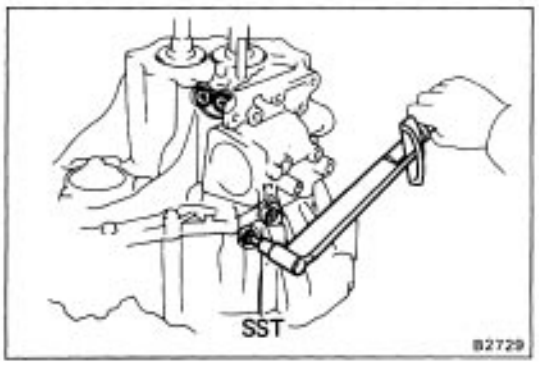

(b) Apply sealant to the plugs and lock ball assembly threads.
Sealant: Part No.08833–00080, THREE BOND 1344, LOCTITE 242 or equivalent
(c) Using SST, tighten the three plugs and lock ball assembly.
SST 09313–30021
Torque: Plug 250 kg–cm (18 ft–lb, 25 N–m)
Lock ball assembly 400 kg–cm (29 ft–lb, 39 N–m)

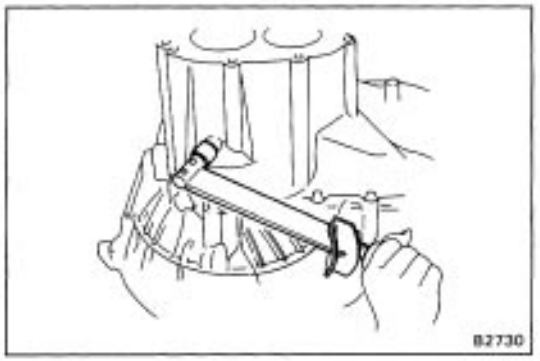

26. INSTALL AND TORQUE REVERSE IDLER GEAR SHAFT
(a) Apply sealant to the bolt threads.
Sealant: Part No. 08833–00070, Adehsive 1324, THREE BOND 1324 or equivalent
(b) Install and torque the bolt.
Torque: 300 kg–cm (22 ft–lb, 29 N–m)

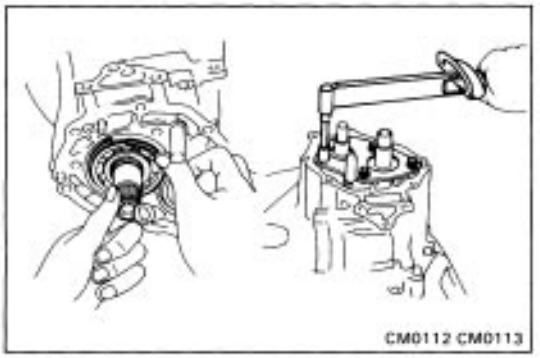

27. INSTALL BEARING SNAP RINGS
28. INSTALL SNAP RING TO NO.2 FORK SHAFT
29. INSTALL REAR BEARING RETAINER
Install and torque the five bolts.
Torque: 195 kg–cm (14 ft–lb, 19 N–m)

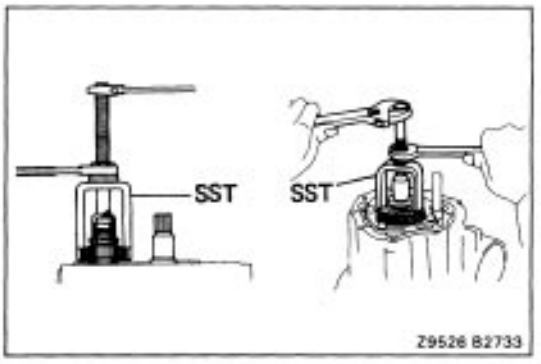

30. INSTALL FIFTH DRIVEN GEAR
Using SST, install the 5th driven gear.
SST 09309–12020

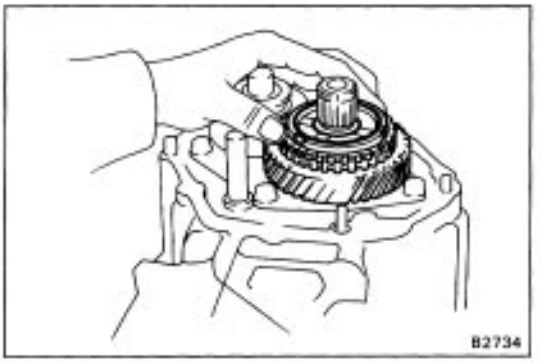

31. INSTALL SPACER, NEEDLE ROLLER BEARINGS, FIFTH GEAR AND SYNCHRONIZER RING
(a) Install the spacer.
(b) Apply gear oil to the needle roller bearings.
(c) Install the 5th gear with the needle roller bearings and synchronizer ring.

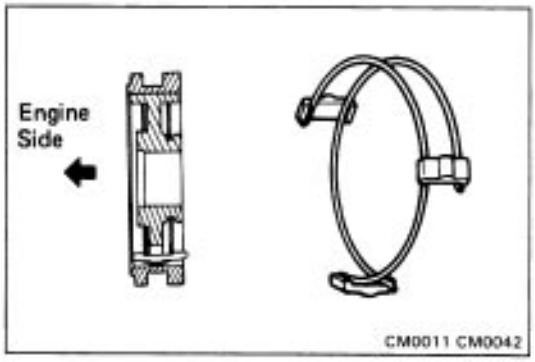

32. INSERT NO.3 CLUTCH HUB INTO HUB SLEEVE

(a) Install the clutch hub and shifting keys to the hub sleeve.

(b) Install the shifting key springs under the shifting keys.

NOTICE: Install the key springs positioned so that their end gaps are not in line.

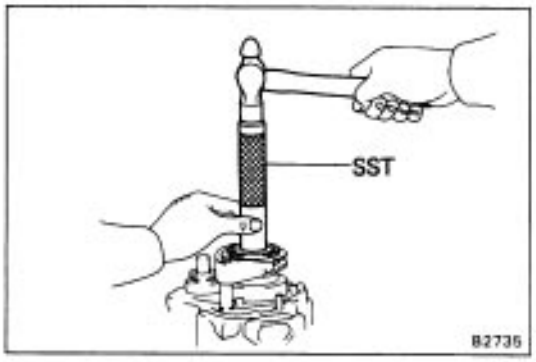

33. INSTALL NO.3 HUB SLEEVE ASSEMBLY WITH NO.3 SHIFT FORK

(a) Support the tip of the input shaft with a spacer or such to raise the transaxle assembly.

(b) Using SST, drive in No.3 hub sleeve with shift fork.

SST 09612–22011

NOTICE: Align the synchronizer ring slots with the shifting keys.

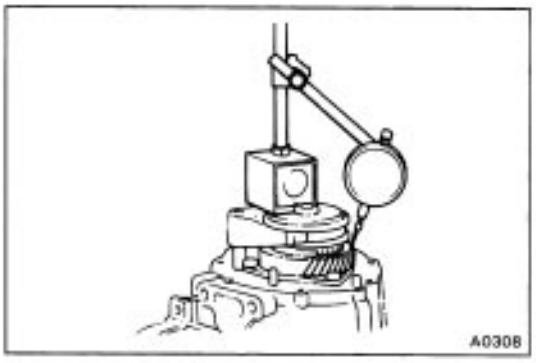

34. MEASURE FIFTH GEAR THRUST CLEARANCE

Using a dial indicator, measure the thrust clearance.

Standard clearance: 0.10–0.57 mm (0.0039–0.0224 in.)

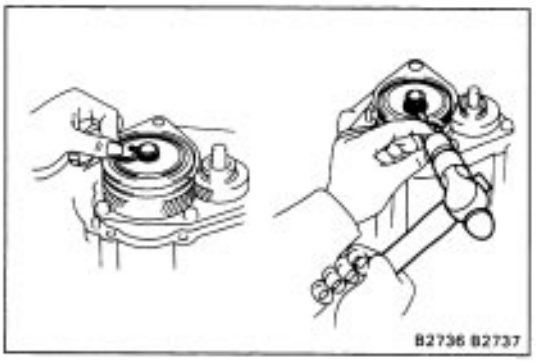

35. INSTALL SNAP RING

Select a snap ring that will allow minimum axial play and install it on the shaft.

Mark	Thickness mm(in.)	Mark	Thickness mm (in.)
A	2.25 (0.0886)	E	2.49 (0.0980)
B	2.31 (0.0909)	F	2.55 (0.1004)
C	2.37 (0.0933)	G	2.61 (0.1028)
D	2.43 (0.0957)		

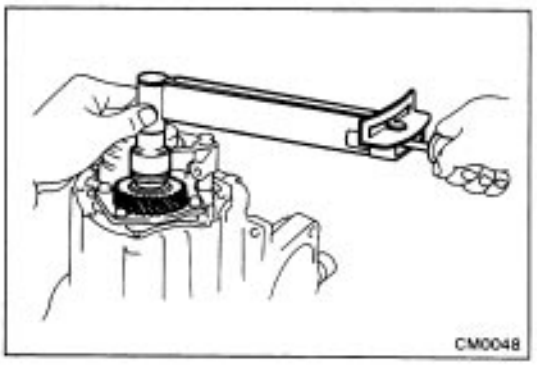

36. INSTALL LOCK NUT

(a) Engage the gear double meshing.

(b) Install and torque the nut.

Torque: 1,200 kg–cm (87 ft–lb, 118 N–m)

(c) Disengage the gear double meshing.

(d) Stake the lock nut.

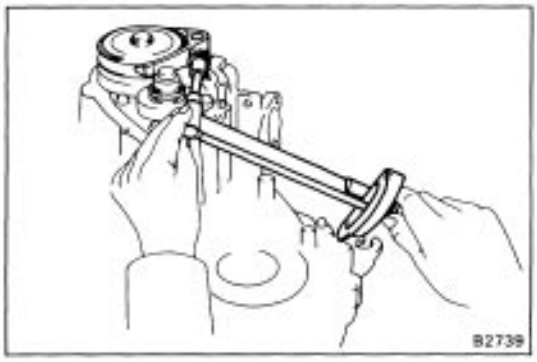

37. INSTALL BOLT

Torque: 160 kg–cm (12 ft–lb, 16 N–m)

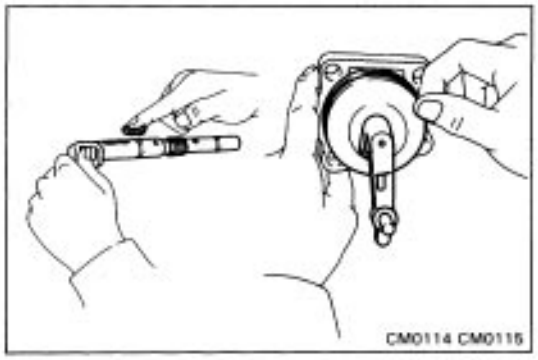

38. ASSEMBLE SHIFT AND SELECT LEVER SHAFT ASSEMBLY

(a) Apply MP grease to the shaft.

(b) Install the boot shaft to the control shaft cover.

HINT: Make sure to install the boot in correct direction. Position the air bleed of the boot downward.

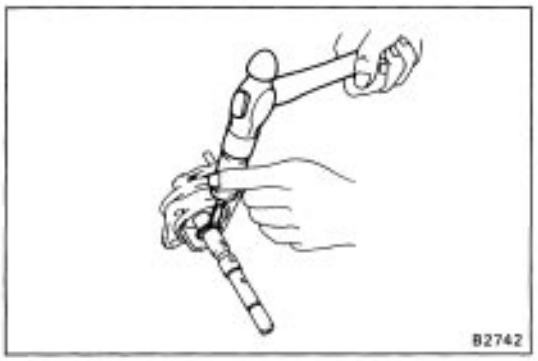

(c) Install the snap ring and spring seat.

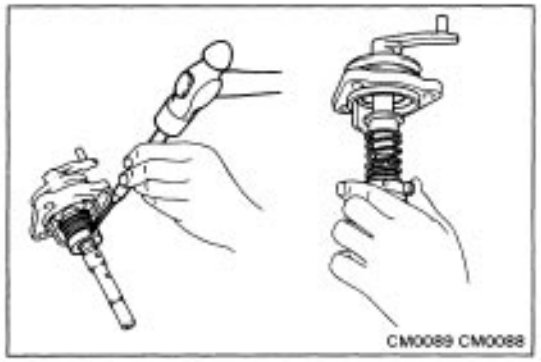

(d) Install the compression spring and select inner lever.

(e) Using a pin punch and hammer, drive in the slotted spring pin.

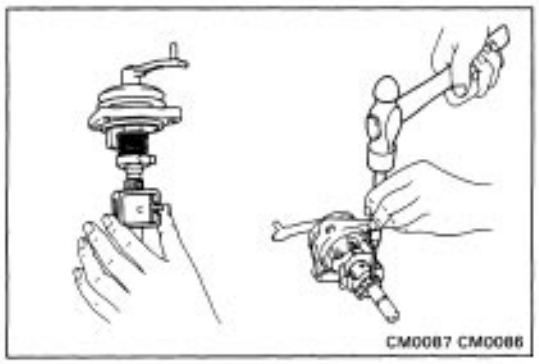

(f) Align the interlock plate with No. 1 shift inner lever and install it.

(g) Using a pin punch and hammer–, drive in the slotted spring pin.

(h) Install No.2 shift inner lever.

(i) Using a pin punch and hammer, drive in the slotted spring pins.

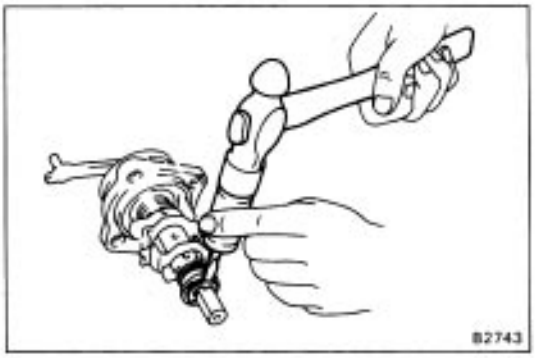

(j) Install the compression spring, seat and E–ring.

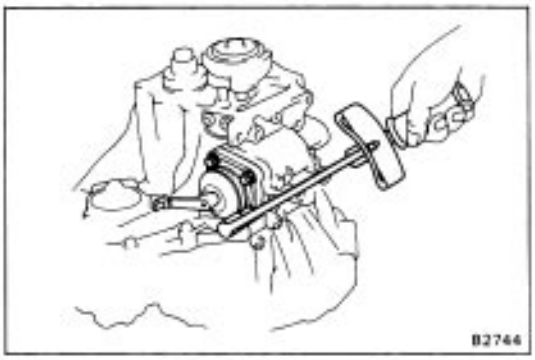

39. INSTALL SHIFT AND SELECT LEVER SHAFT ASSEMBLY

(a) Place a new gasket in position on the control shaft cover.

(b) Apply sealant to the bolt threads.

Sealant: Part No.08833–00080, THREE BOND 1344, LOCTITE 242 or equivalent

(c) Install the shift and select lever shaft, and torque the bolts.

Torque: 200 kg–cm (14 ft–lb, 20 N–m)

(d) Install the bellcrank to the transmission case.

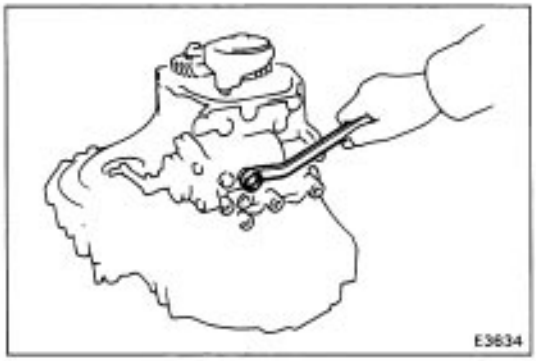

40. INSTALL LOCK BOLT

Install the lock bolt.

Torque: 300 kg–cm (22 ft–lb, 29 N–m)

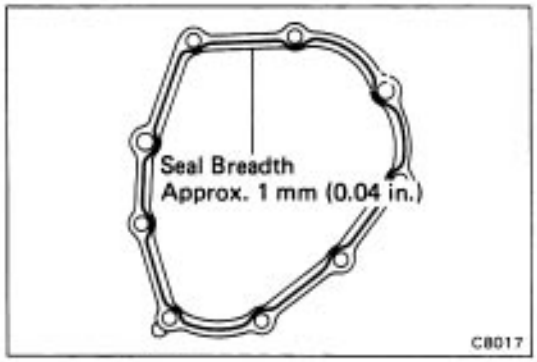

41. INSTALL TRANSMISSION CASE COVER

(a) Remove any packing material and be careful not to drop oil on the contacting surfaces of the transmission case or case cover.

(b) Apply seal packing to the transmission case as shown.

Seal packing: Part No. 08826–00090, THREE BOND 1281 or equivalent.

HINT: Install the transmission case cover as soon as the seal packing is applied.

(c) Install and torque the nine bolts.

Torque: 185 kg–cm (13 ft–lb, 18 N–m)

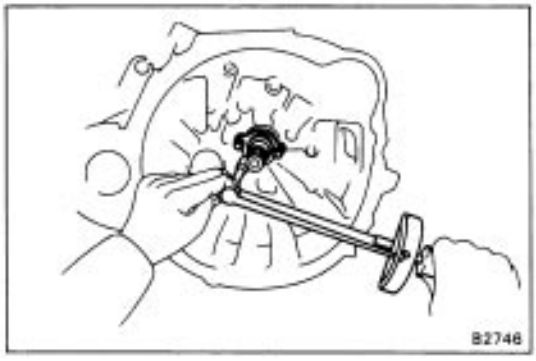

42. INSTALL FRONT BEARING RETAINER

Using a torx socket wrench, torque the three torx screws.

(Torx socket wrench 09042–00010)

Torque: 110 kg–cm (8 ft–lb, 11 N–m)

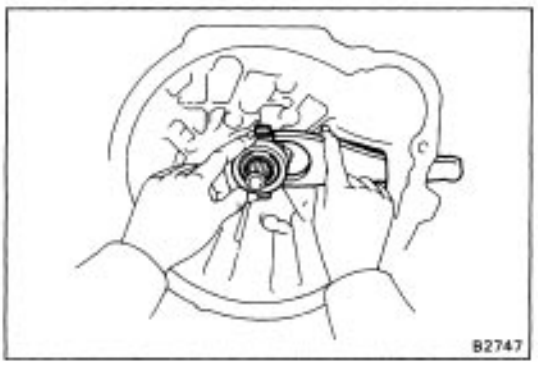

43. INSTALL RELEASE FORK AND BEARING

(a) Apply molybdenum disulphide lithium base grease to the following parts.

- Release bearing hub inside groove
- Input shaft spline
- Release fork contact surface

(b) Apply MP grease to the front surface of the release bearing.

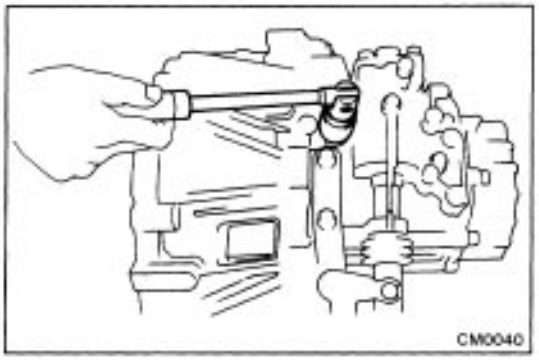

44. INSTALL BACK–UP LIGHT SWITCH

Install the back–up light switch.

Torque: 410 kg–cm (30 ft–lb, 40 N–m)

45. INSTALL SPEEDOMETER DRIVEN GEAR

SHIFT LEVER AND CONTROL CABLE

COMPONENTS

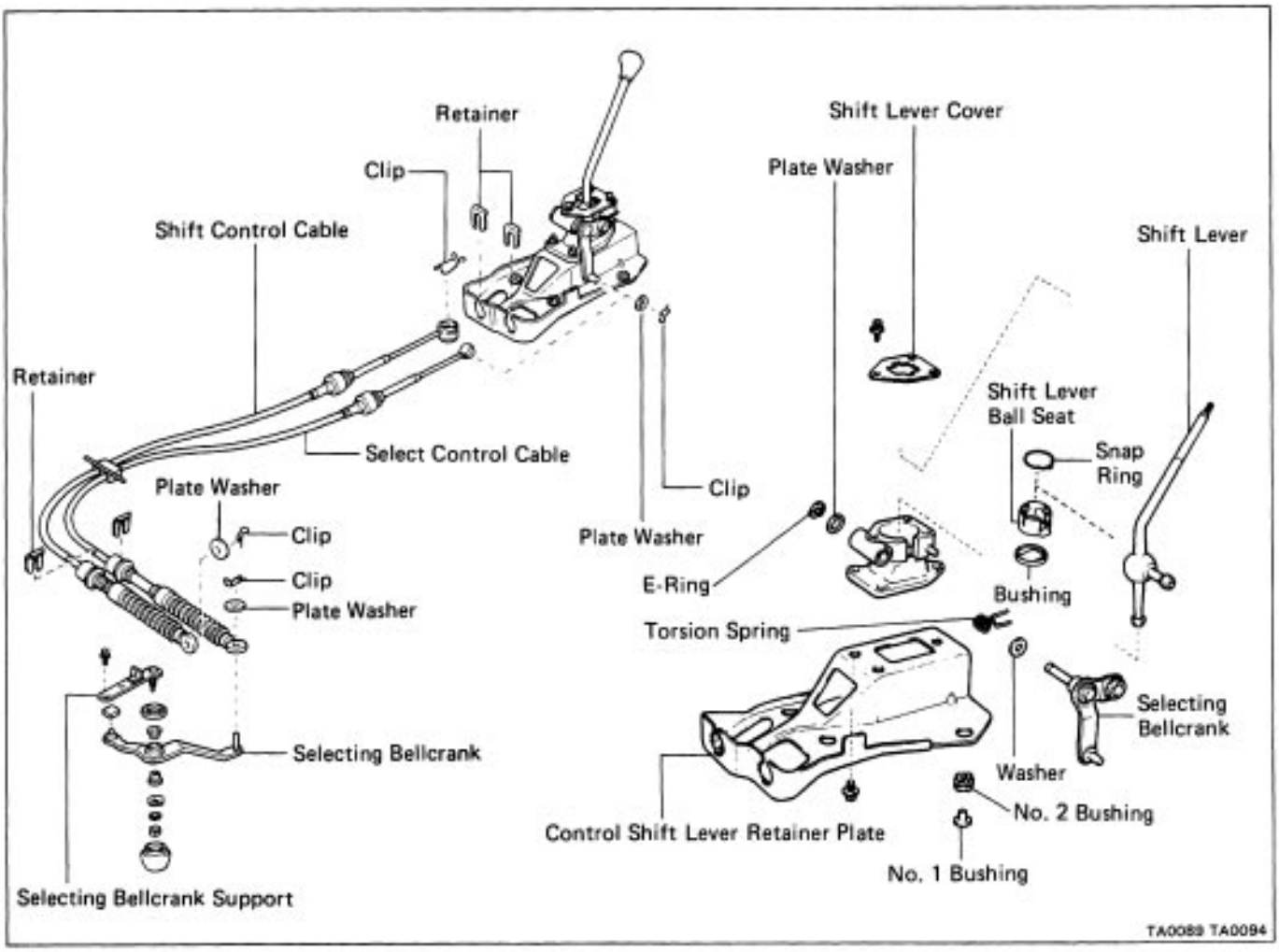

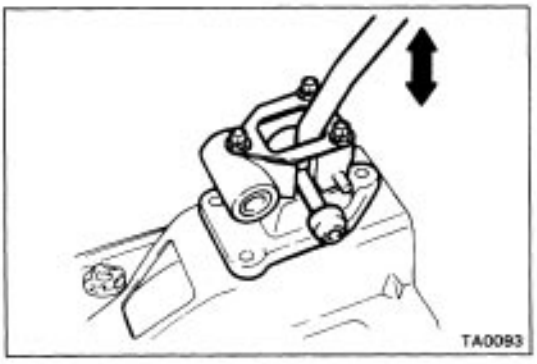

INSPECTION OF SHIFT LEVER

INSPECT SHIFT LEVER PLAY

Check that the shift lever vertical play.

Maximum play: 0.15 mm (0.0059 in.)

If the play is greater than maximum, replace the bushing.

DIFFERENTIAL

REMOVAL OF DIFFERENTIAL

1. REMOVE TRANSAXLE

(See page MT–4)

2. REMOVE DIFFERENTIAL ASSEMBLY

(See steps 1 to 23 on pages MT–8 to 10)

COMPONENTS

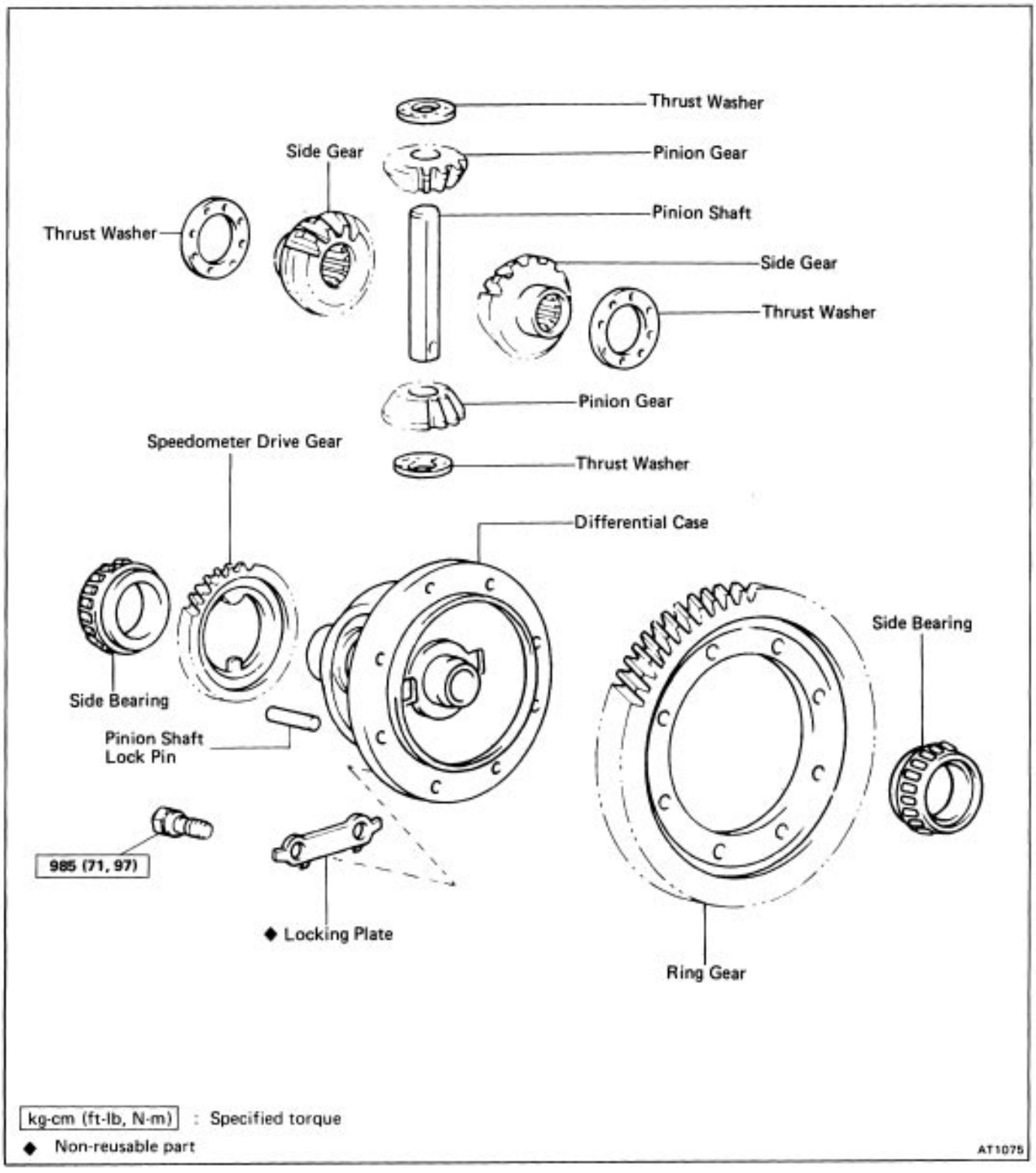

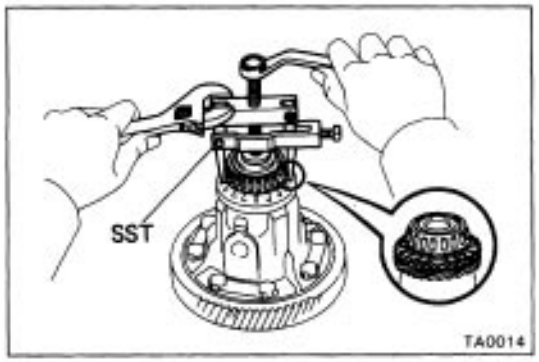

REPLACEMENT OF DIFFERENTIAL PARTS

1. REPLACE SIDE BEARING

(See page MT–29**)**

(a) Fasten SST under the bearing above the cutouts on the speedometer drive gear. Remove the bearing from the case.

SST 09502–10012

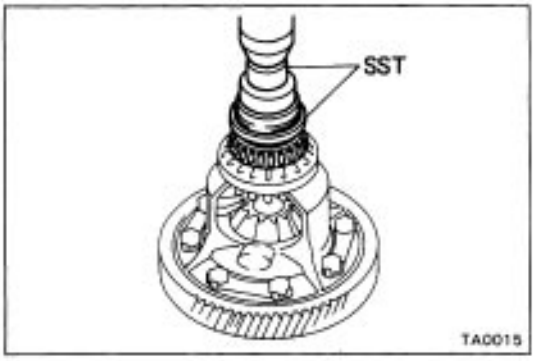

(b) Using SST and a press, press a new side bearing onto the differential case.

SST 09350–32014 (09351–32090, 09351–32120)

2. REPLACE RING GEAR

(a) Loosen the staked part of the lock plate.

(b) Remove the eight bolts and locking plate.

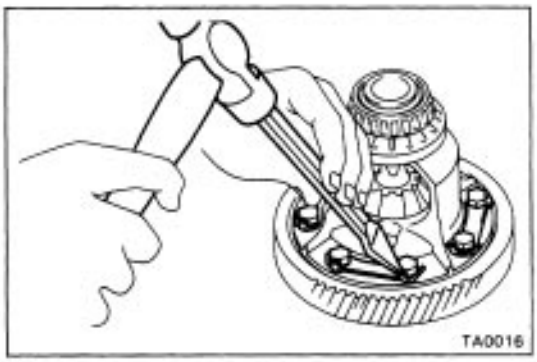

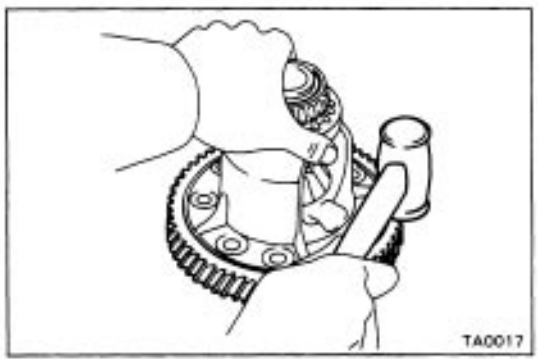

(c) Using a copper hammer, tap on the ring gear to remove it from the case.

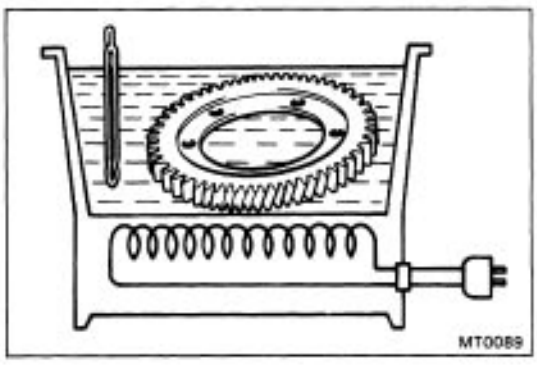

(d) Clean the contact surface of the differential case.

(e) Heat the ring gear to about 100 ˚C (212 ˚F) in an oil bath.

NOTICE: Do not heat the ring gear above 110˚ C (230 ˚ F).

(f) Clean the contact surface of the ring gear with cleaning solvent.

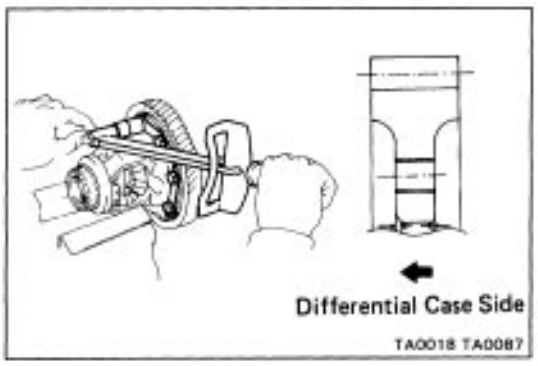

(g) Then quickly install the ring gear on the differential case.
(h) Install a new locking plates and set bolts. Tighten the set bolts uniformly and a little at a time. Torque the bolts.

Torque: 985 kg–cm (71 ft–lb, 97 N–m)

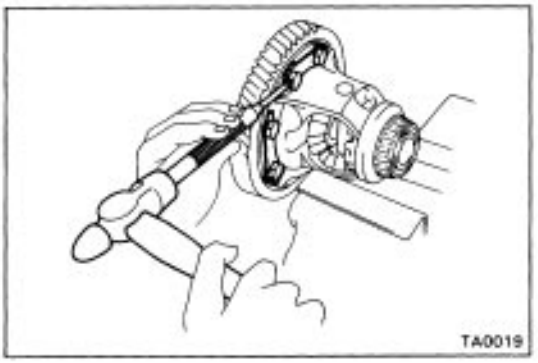

(i) Using a hammer and drift punch, stake the locking plates.

HINT: Stake one claw flush with the flat surface of the nut. For the claw contacting the protruding portion of the nut, stake only the half on the tightening side.

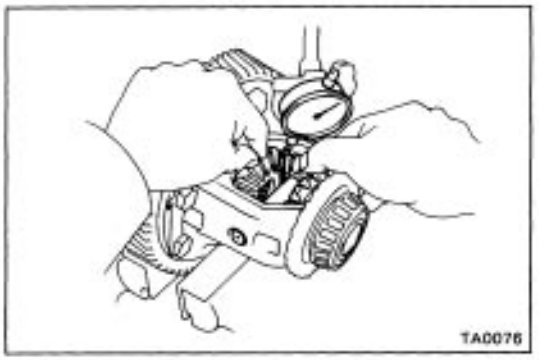

ADJUSTMENT OF BACKLASH

1. CHECK SIDE GEAR BACKLASH

Measure the backlash of one side gear while holding one pinion toward the case.

Standard backlash: 0.05–0.20 mm (0.0020–0.0079 in.)

If the backlash is out of specification, install the correct thrust washer to the side gears.

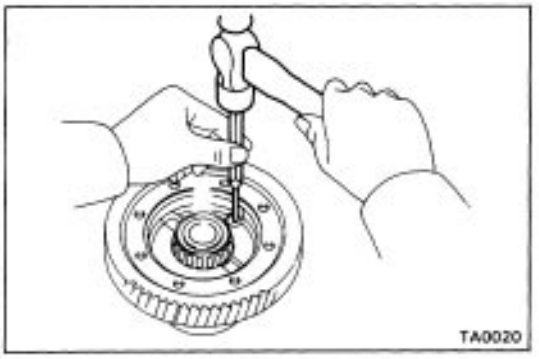

2. DISASSEMBLE DIFFERENTIAL CASE

(a) Drive out the pinion shaft lock pin from the side on which the ring gear is installed.
(b) Remove the pinion shaft from the case.

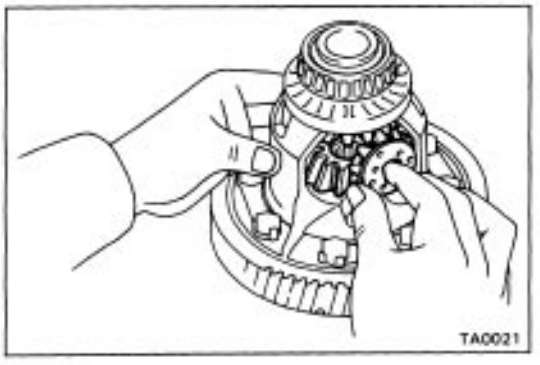

(c) Remove the two pinion gears and two side gears with the four thrust washers from the case.

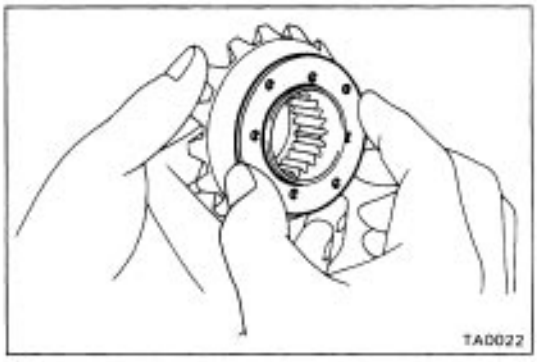

3. ASSEMBLE DIFFERENTIAL CASE

(a) Install the removed thrust washers to the side gears.

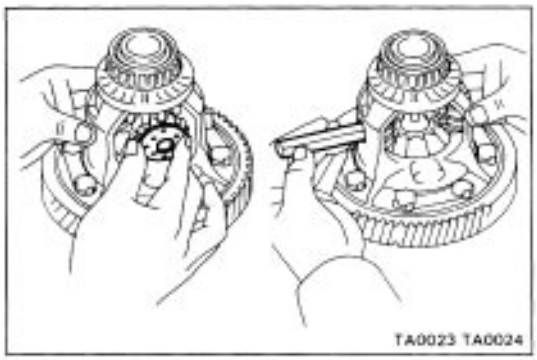

(b) Install the side gears with the thrust washers, pinion thrust washers and pinion gears.

(c) Install the pinion shaft.

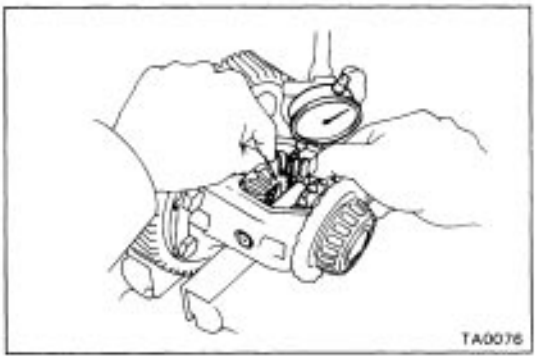

(d) Measure the side gear backlash while holding one pinion gear toward the case.

Standard backlash: 0.05–0.20 mm
(0.0020–0.0079 in.)

Referring to the table bellow, select the thrust washers which will ensure that the backlash in within specification.
Try to select washers of the same size for both sides.

Thrust washer thickness mm (in.)

0.95 (0.0374)	1.10 (0.0433)
1.00 (0.0394)	1.15 (0.0453)
1.05 (0.0413)	1.20 (0.0472)

If the backlash is not within specification, install a thrust washer of different thickness.

(e) Install the lock pin.

(1) Using a hammer and punch, drive the lock pin through the case and hole in the pinion shaft.

(2) Stake the differential case.

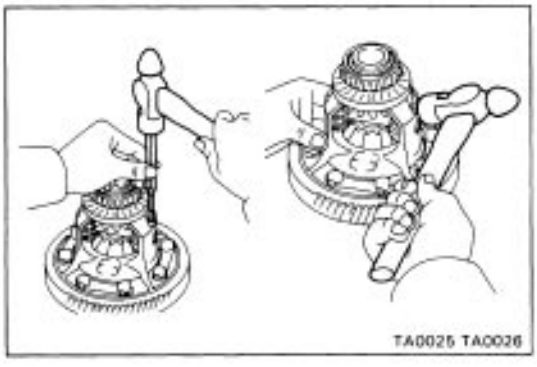

INSTALLATION OF DIFFERENTIAL

1. INSTALL DIFFERENTIAL ASSEMBLY TO TRANSAXLE

(See steps 18 to 37 and 39 to 45 on pages MT–20 to 27)

2. INSTALL TRANSAXLE

(See page MT–4)

DESCRIPTION

- The E55F5 and E57F5 transaxle has been made compact by arranging the transmission, the center differential, the front differential and the transfer on the same quadruple case axle.
- The center differential, which compensates for the difference between the rotation speed of the front and rear wheels, provide durability and reliability by utilizing bevel gear to distributing the engine power from the transmission to both the front and rear propeller shafts in a 50/50 split. This center differential has been equipped with a lock mechanism which enables the vehicle to get out of the trouble spot more easily when one of the four wheels spins in the deep snow or muddy roads, etc.

E55F5 and E57F5 Transaxle

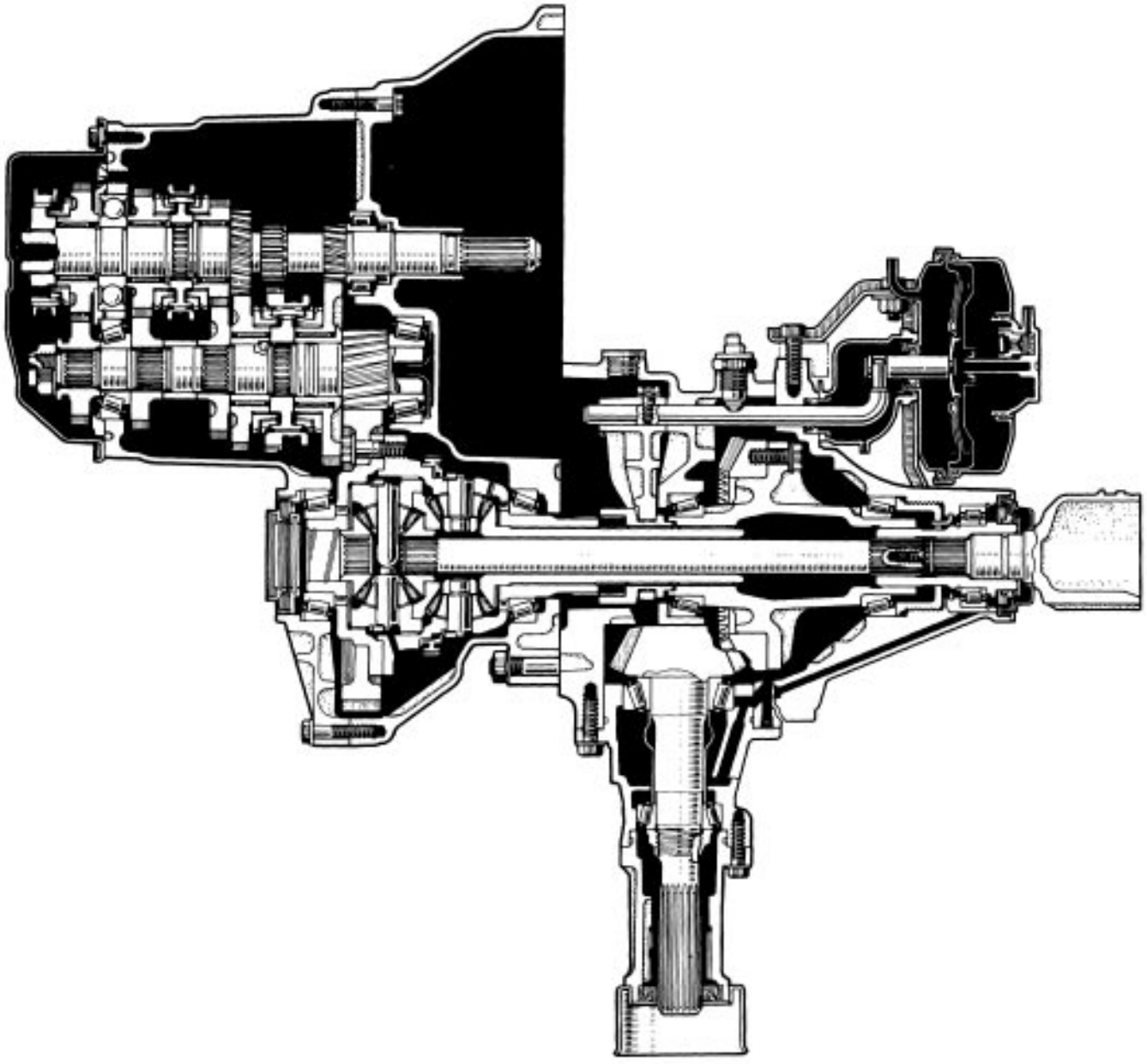

- The illustrations below show the power transmission train.

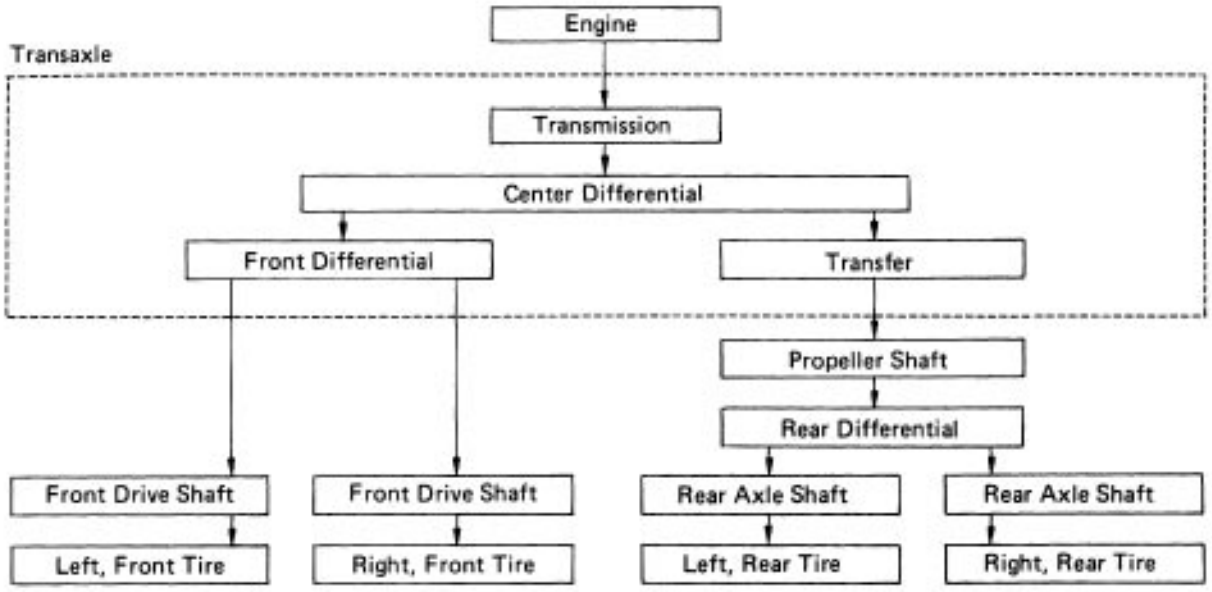

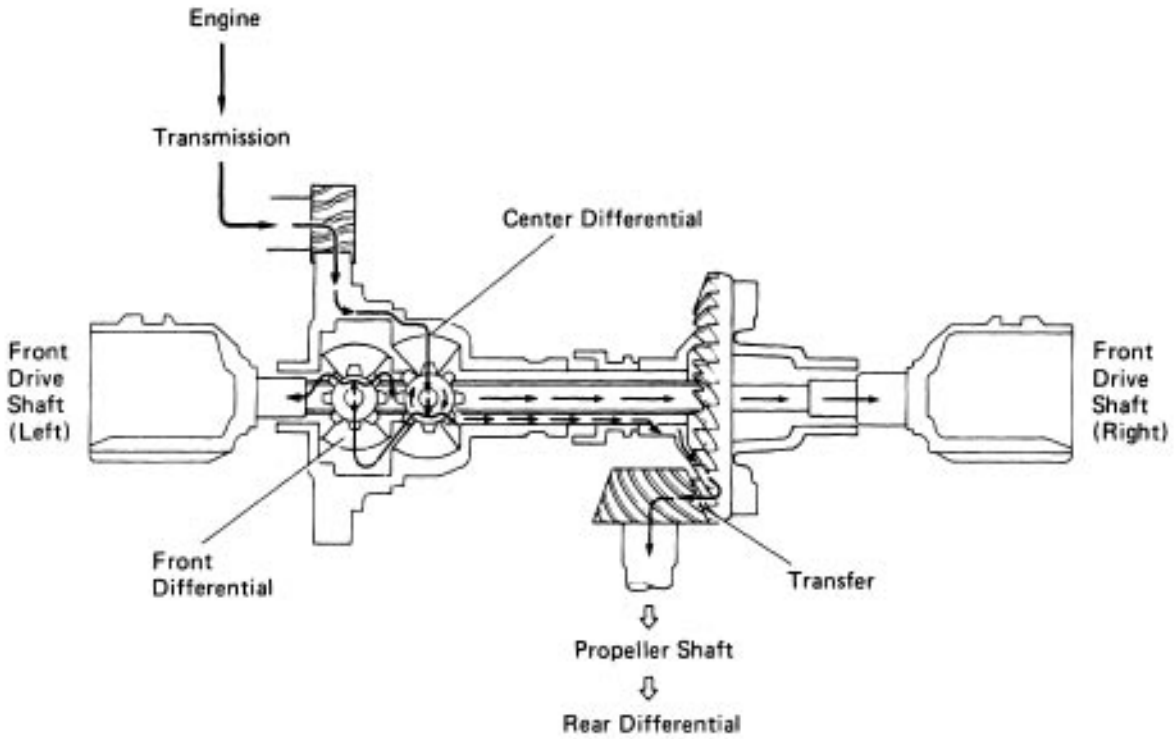

MT0434

- The illustrations below show the engagements of transaxle gears.

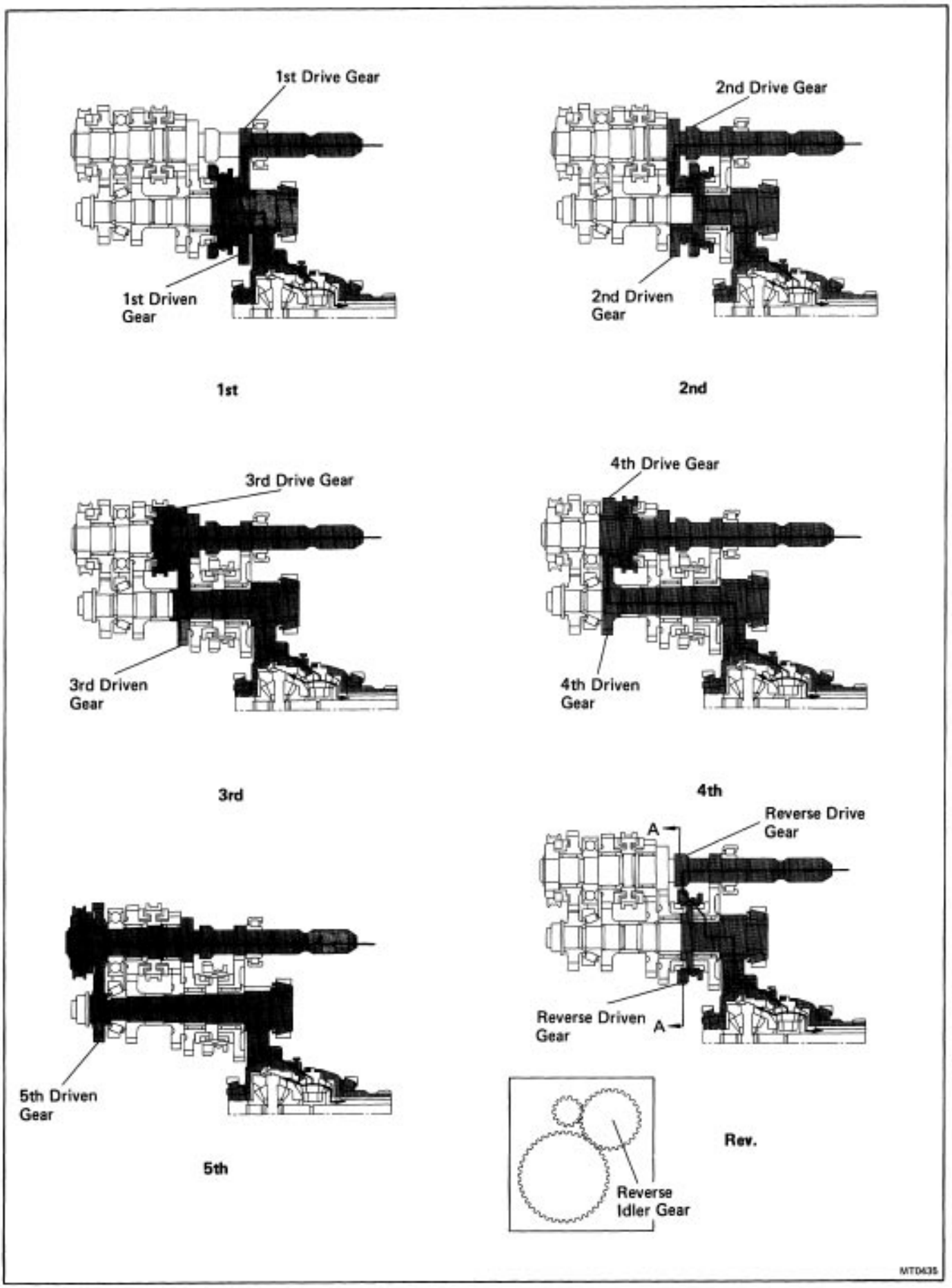

	Transaxle type	E55F5 and E57F5
Transmission	Operation method	Floor shift vehicles are provided will push–pull type remote control
	Transmission type	Forward : Constant mesh Reverse : Sliding mesh
Center differential	Reduction side (Gear type)	Helical gear
	Differential side (Gear type)	Bevel gear
	Type of differential control mechanism	Differential lock
Transfer	Gear type	Hypoid Gear

- The oil used in each transaxle is as follows:
  Transaxle oil E50 (08885–80206)

Recommended oil

Oil grade: API GL–5

Viscosity: Above –18˚C (0˚F) SAE75W–90, 80W–90 or 90

Below –18˚ C (0˚ F) SAE75W–90, 80W–90 or =8OW

- Oil capacity: 5.0 liters (5.3 US qts, 4.4 Imp. qts)

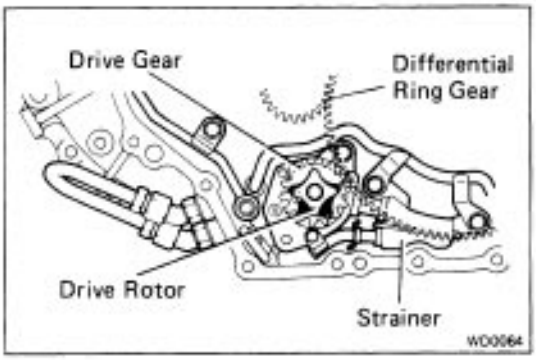

OIL PUMP

- The oil pump is of the trochoid type, and is driven by the differential ring gear and the pump drive gear. It is located at the bottom of the transaxle case.

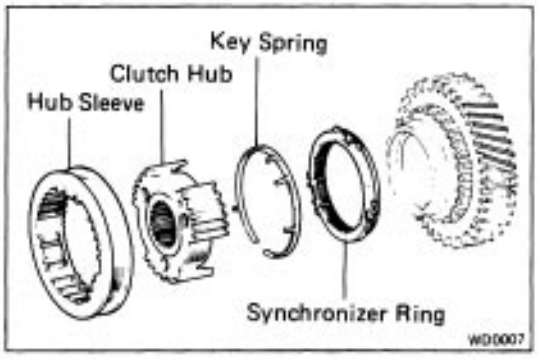

KEY–LESS TYPE SYNCHROMESH FUNCTION

- **HUB SLEEVE**
  There are three protrusions on the inside of the hub sleeve to push the key spring.
- **CLUTCH HUB**
  Three apertures are located around the clutch hub to secure the synchronizer ring and key spring in place.
- **KEY SPRING**
  The key spring has four claws. One claw is to secure the key spring in place. Three claws also act as shifting keys as well as key springs.
- **SYNCHRONIZER RING**
  A chamfered ledge is provided at three points along the outer periphery and a bolt is provided in each to secure a key spring.

PRECAUTIONS

When working with FIPG material, you must be observe the following.

- Using a razor blade and gasket scraper, remove all the old packing (FIPG) material from the gasket surfaces.
- Thoroughly clean all components to remove all the loose material.
- Clean both sealing surfaces with a non–residue solvent.
- Apply the seal packing in 1.2 mm (0.047 in.) bead along the sealing surface.
- Parts must be assembled within 10 minutes of application. Otherwise, the packing (FIPG) material must be removed and reapplied.

TROUBLESHOOTING

Problem	Possible cause	Remedy	Page
Noise	Transmission, differential or transfer faulty Wrong oil grade Oil lever low	Disassemble and inspect transmission, differential or transfer Replace oil Add oil	MT–46 MT–45
Oil leakage	Oil lever too high Oil seal, O–ring or gasket worn or damaged	Drain oil Replace oil seal, O–ring or gasket	SA–18 MT–46
Hard to shift or will not shift	Control cable faulty Transmission faulty	Replace control cable Disassemble and inspect transmission	MT–133 MT–46
Tight corner braking phenomenon	Differential, center differential or transfer faulty	Replace differential, center differential or transfer	MT–83 MT–108

ON–VEHICLE REPAIR

REPLACEMENT OF OUTPUT SHAFT OIL SEAL

1. DRAIN TRANSAXLE OIL

2. REMOVE PROPELLER SHAFT

(See page PR–4)

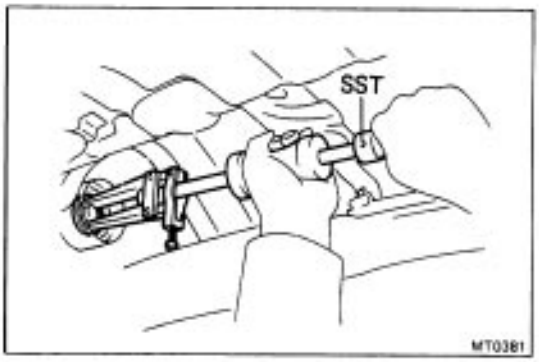

3. REMOVE OUTPUT SHAFT OIL SEAL

Using SST, drive out the oil seal.

SST 09308–00010

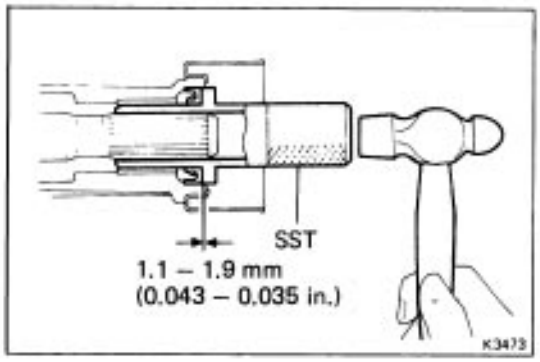

4. INSTALL OUTPUT SHAFT OIL SEAL

Using SST, drive in a new oil seal.

SST 09325–20010

Oil seal depth: 1.1 – 1.9 mm (0.043 – 0.075 in.)

5. INSTALL PROPELLER SHAFT

(See page PR–10)

6. FILL TRANSAXLE WITH GEAR OIL

(See page MT–47)

CENTER DIFFERENTIAL LOCK CONTROL

SYSTEM DIAGRAM AND WIRING DIAGRAM

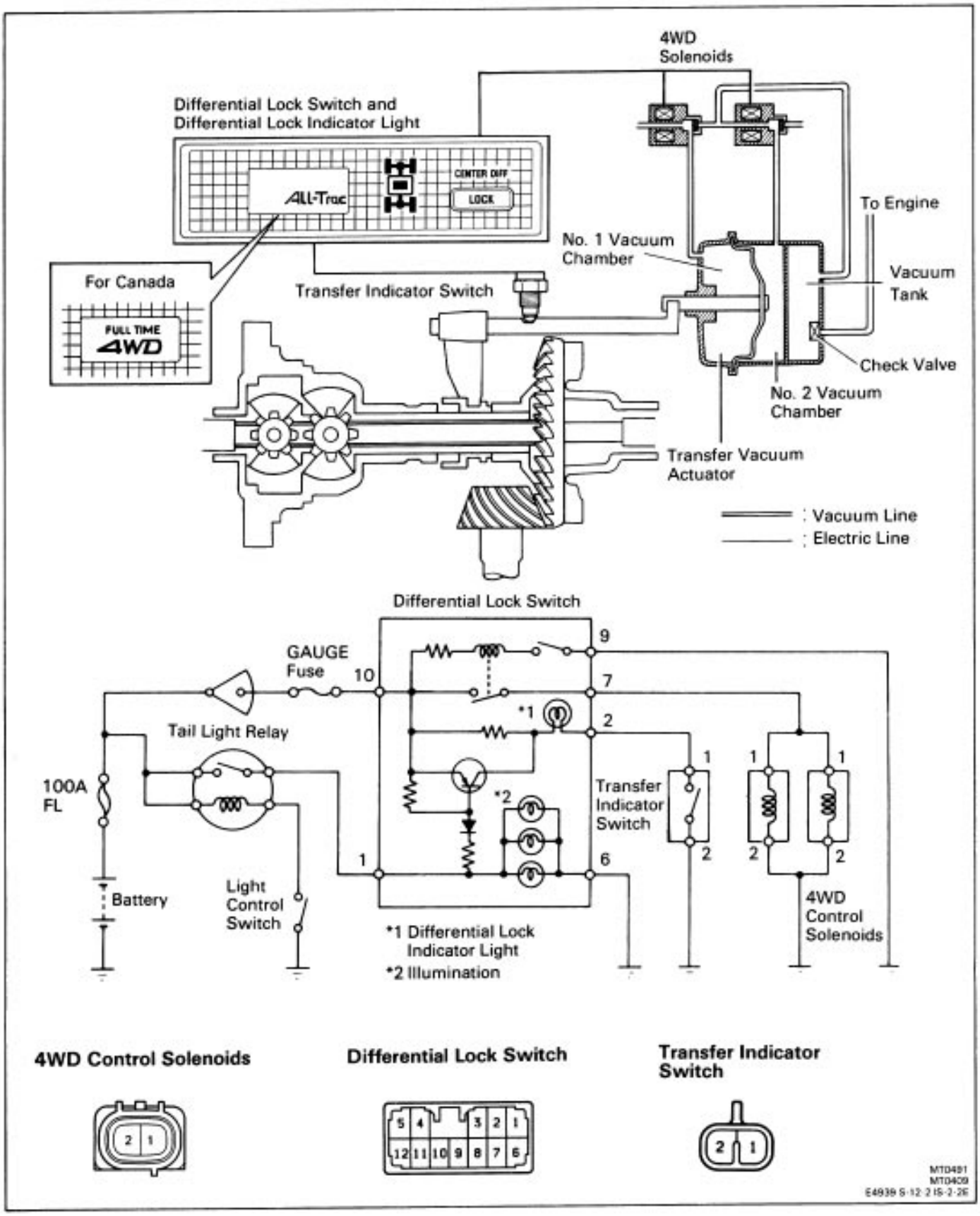

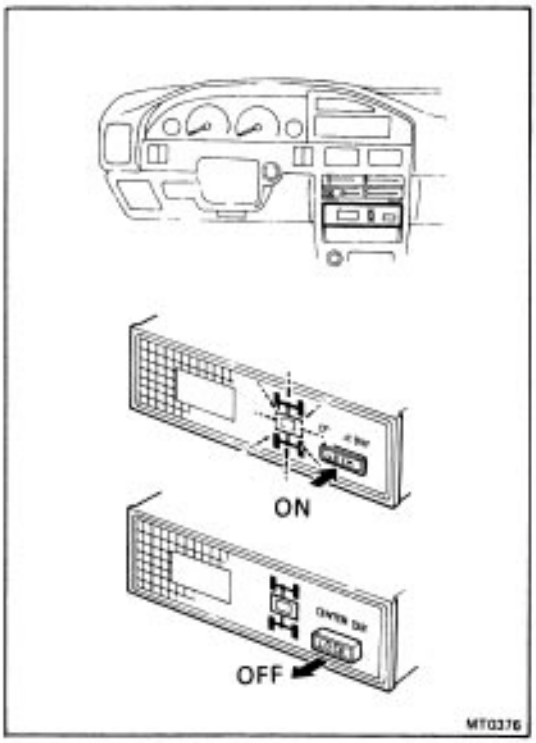

Function Inspection
DIFFERENTIAL LOCK CONTROL

INSPECT DIFFERENTIAL LOCK OPERATION

Start the engine. Check that the differential lock indicator light comes on when the differential lock control switch is turned to ON. Check that the light goes off when the switch is turned to OFF.

HINT: After checking the system, turn the control switch to OFF and check that the differential lock function is released.

Reference: If the indicator light does not come on and go out when the control switch is operated, move the vehicle slightly forward, when the system is operated it should be normal.

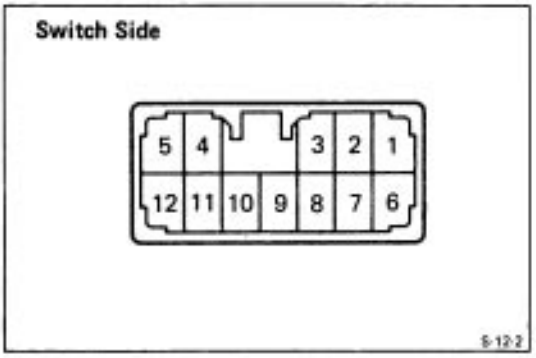

Single Unit Inspection
DIFFERENTIAL LOCK SWITCH

INSPECT CONTINUITY OF DIFFERENTIAL LOCK SWITCH

(a) Disconnect the differential lock switch connector.

(b) Check continuity between terminal as shown in the chart.

Tester connection	Condition		Specified valve
9 – 10	Differential control switch	ON	Continuity
		OFF	No continuity
2 – 10	—		Continuity
7 – 10	—		Continuity
1 – 2	—		Continuity

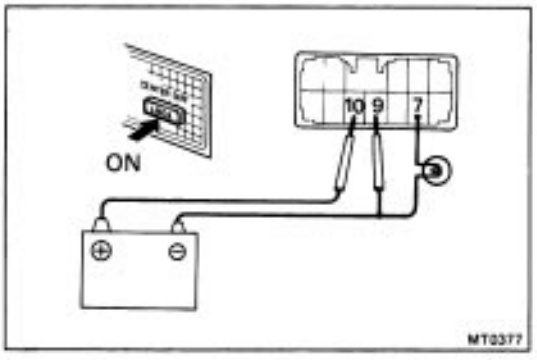

INSPECT OPERATION OF DIFFERENTIAL LOCK SWITCH

(a) Connect the positive (+) lead from the battery to terminal 10 and connect the negative (–) lead from the battery to terminal 9.

(b) Connect a 3–4 W test bulb between terminal 7 and negative lead.

(c) Push the differential control switch, check that the bulb lights.

If continuity is not as specified, replace the switch.

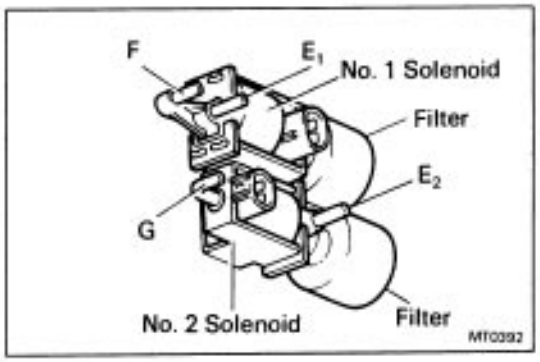

4WD CONTROL SOLENOID

INSPECT OPERATION OF 4WD CONTROL SOLENOID

Check air flow of each port when the battery voltage is applied and is not applied to terminals No. 1, No. 2 of the solenoid.

O—O : Aeration

Port / Voltage	No. 1 Solenoid			No. 2 Solenoid		
	F	E_1	Filter	G	E_2	Filter
Apply battery voltage	O—O				O—O	
Non voltage		O—O		O—O		

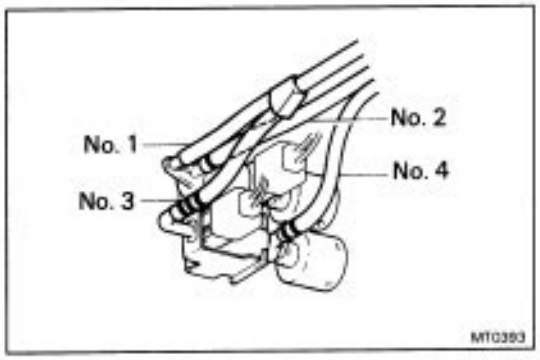

TRANSFER VACUUM ACTUATOR

1. INSPECT ACTUATOR HOSE CONNECTION

Check that the actuator hoses are connected to the solenoids and actuator tightly and properly.

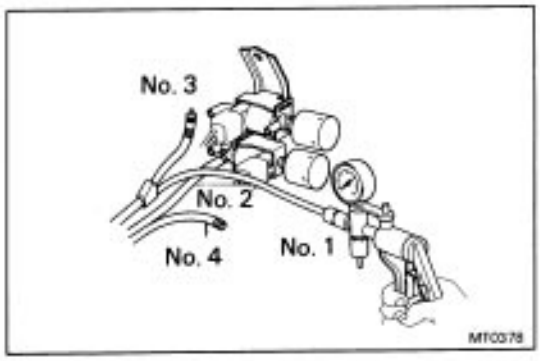

2. INSPECT ACTUATOR AIRTIGHTNESS

(Vacuum Tank)

(a) Disconnect the No. 1, No. 3 and No. 4 hoses from the solenoids.
(b) Plug the No. 3 hose.
(c) Connect the vacuum tool to the No. 1 hose.
(d) Check that the indicator remains stable when a vacuum of 500 mmHg (19.69 in.Hg. 66.7 kPa) is applied.

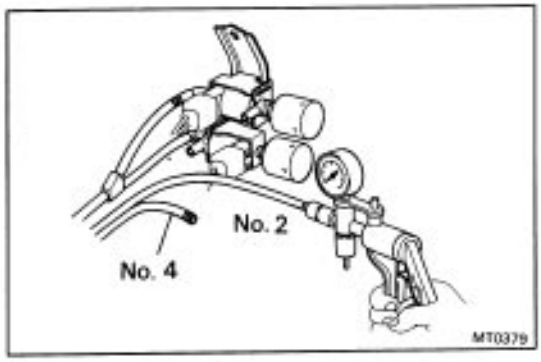

(No. 1 Vacuum Chamber Side)

(a) Disconnect the No. 2 and No. 4 hoses from the solenoids.
(f) Connect the vacuum tool to the No. 2 hose.
(c) Check that the indicator remains stable when a vacuum of 500 mmHg (19.69 in.Hg, 66.7 kPa) is applied.

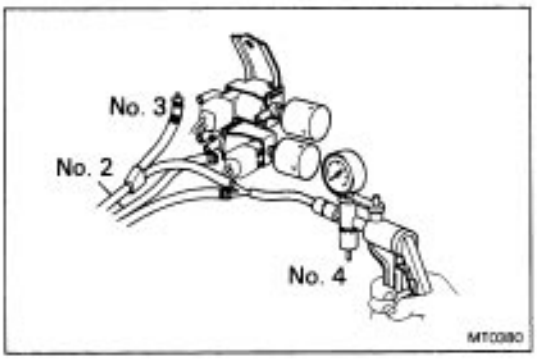

(No. 2 Vacuum Chamber Side)

(a) Disconnect the all hoses from the solenoids.
(b) Plug the No. 3 hose.
(c) Connect the vacuum tool to No. 1 and No. 4 hoses.
(d) Check that the indicator remains stable when a vacuum of 500 mmHg (19.69 in.Hg 66.7 kPa) is applied.

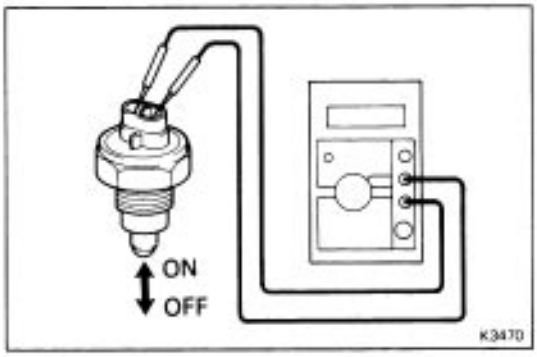

TRANSFER INDICATOR SWITCH

INSPECT TRANSFER INDICATOR SWITCH FOR CONTINUITY

(a) Disconnect the indicator switch from the transfer.
(b) Check continuity between the terminals when the switch is turned ON and when turned OFF.

Switch ON position: Continuity
Switch OFF position: No continuity

If not, replace the indicator switch.

REMOVAL AND INSTALLATION OF TRANSAXLE

REMOVAL AND INSTALLATION OF ENGINE WITH TRANSAXLE

Remove and install the parts as shown.

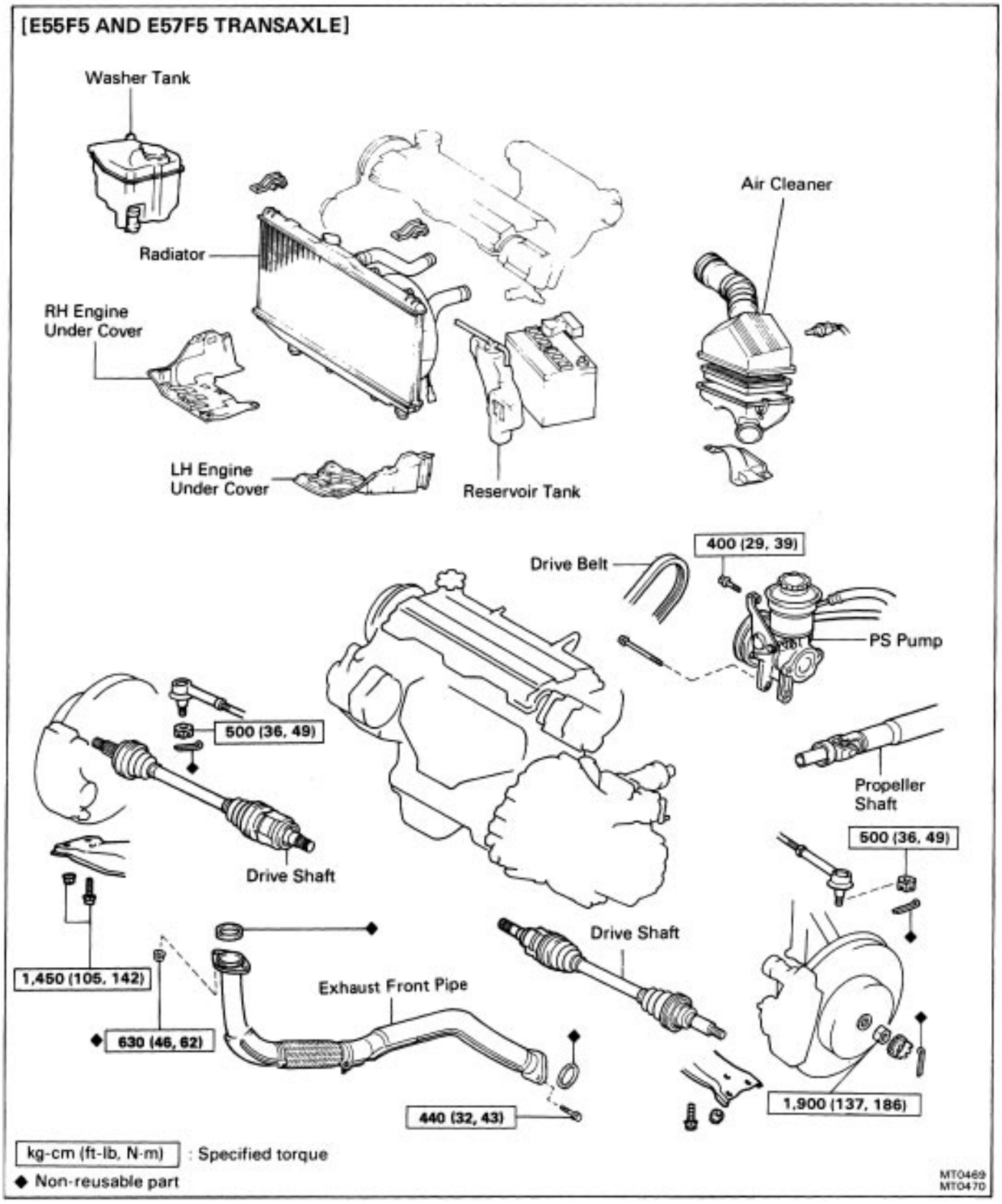

REMOVAL AND INSTALLATION OF ENGINE WITH TRANSAXLE (Cont'd)

Remove and install the parts as shown.

Connector and Wire Harness

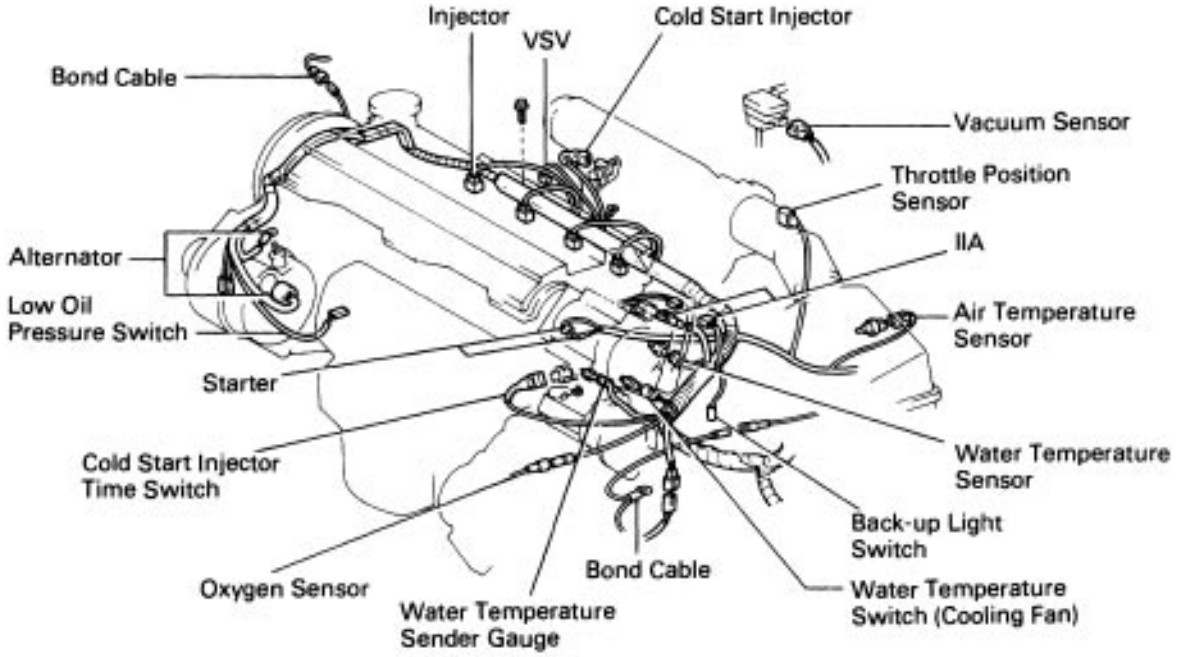

Vacuum Hose and Fuel Hose

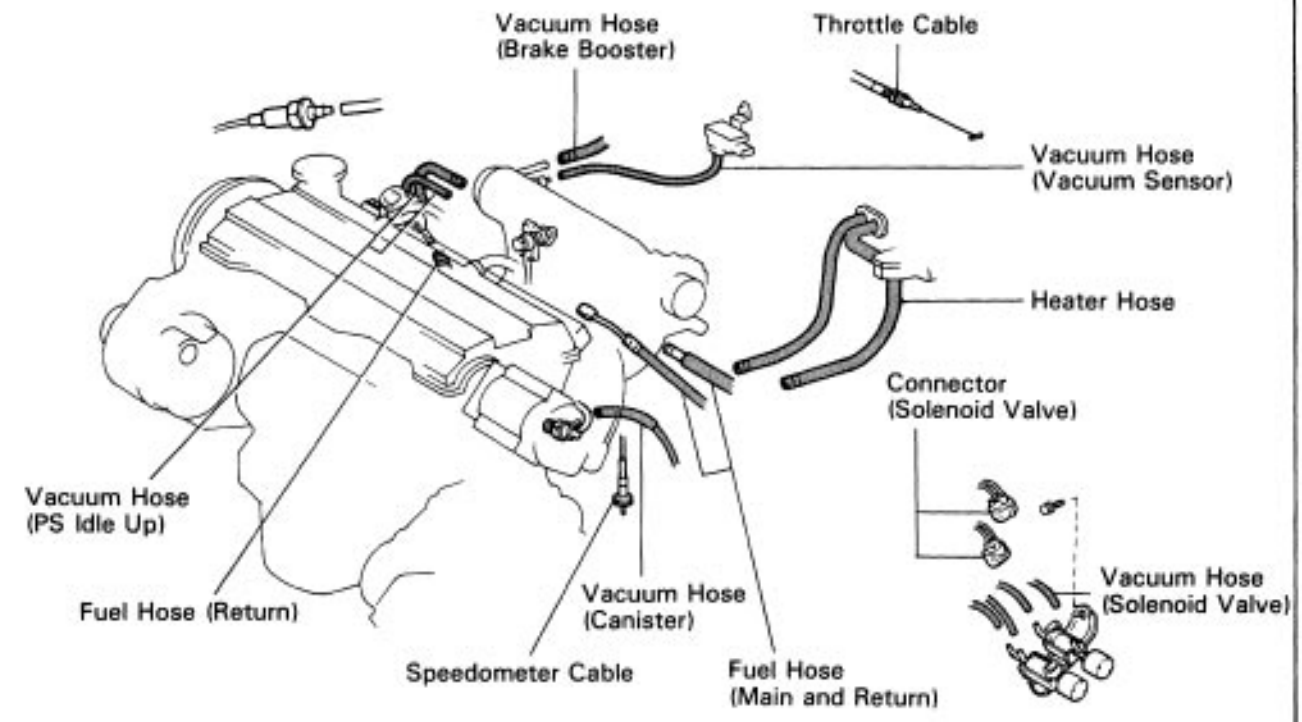

MT0471
MT0473

REMOVAL AND INSTALLATION OF ENGINE WITH TRANSAXLE (Cont'd)

Remove and install the parts as shown.

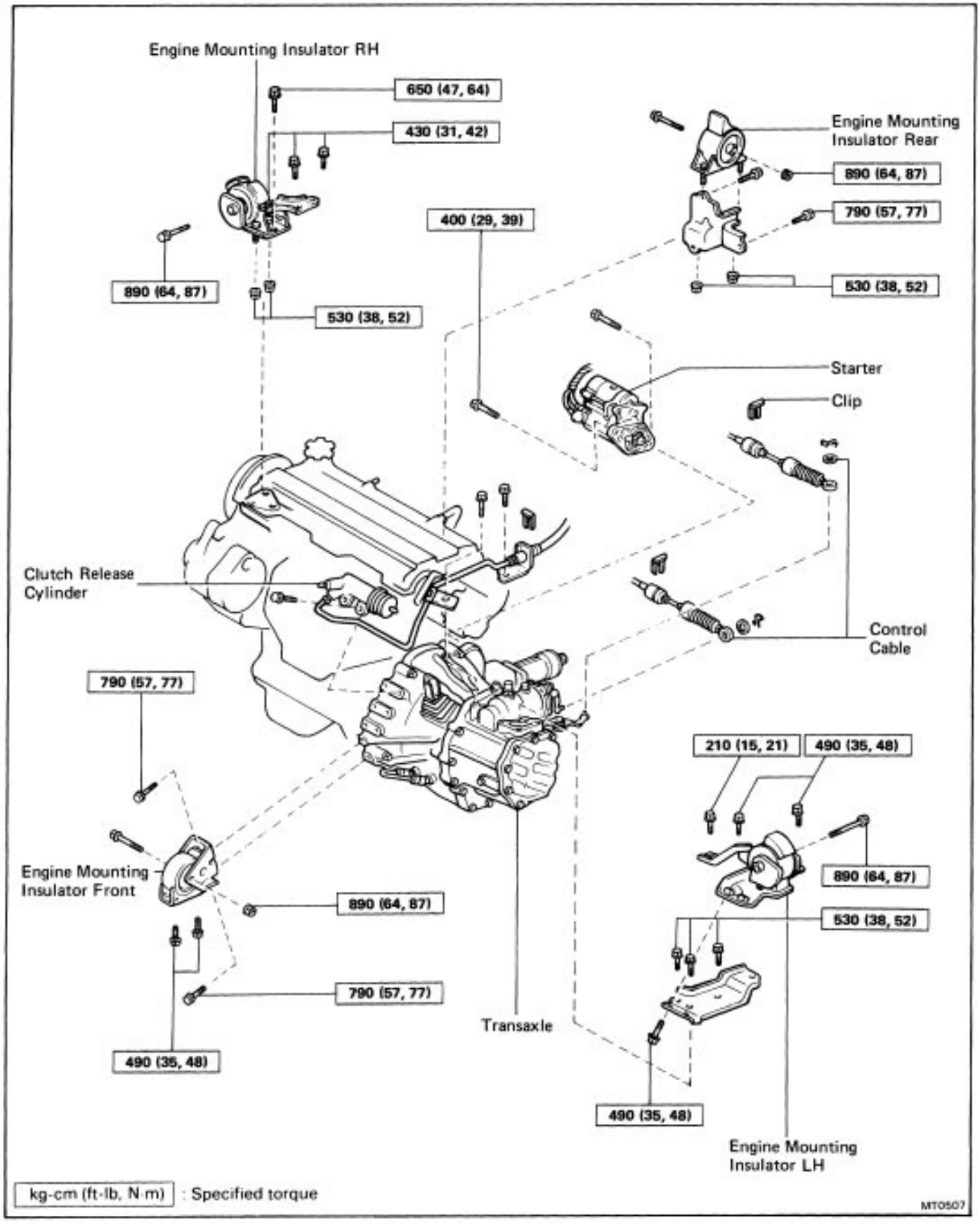

REMOVAL AND INSTALLATION OF ENGINE WITH TRANSAXLE (Cont'd)

Remove and install the parts as shown.

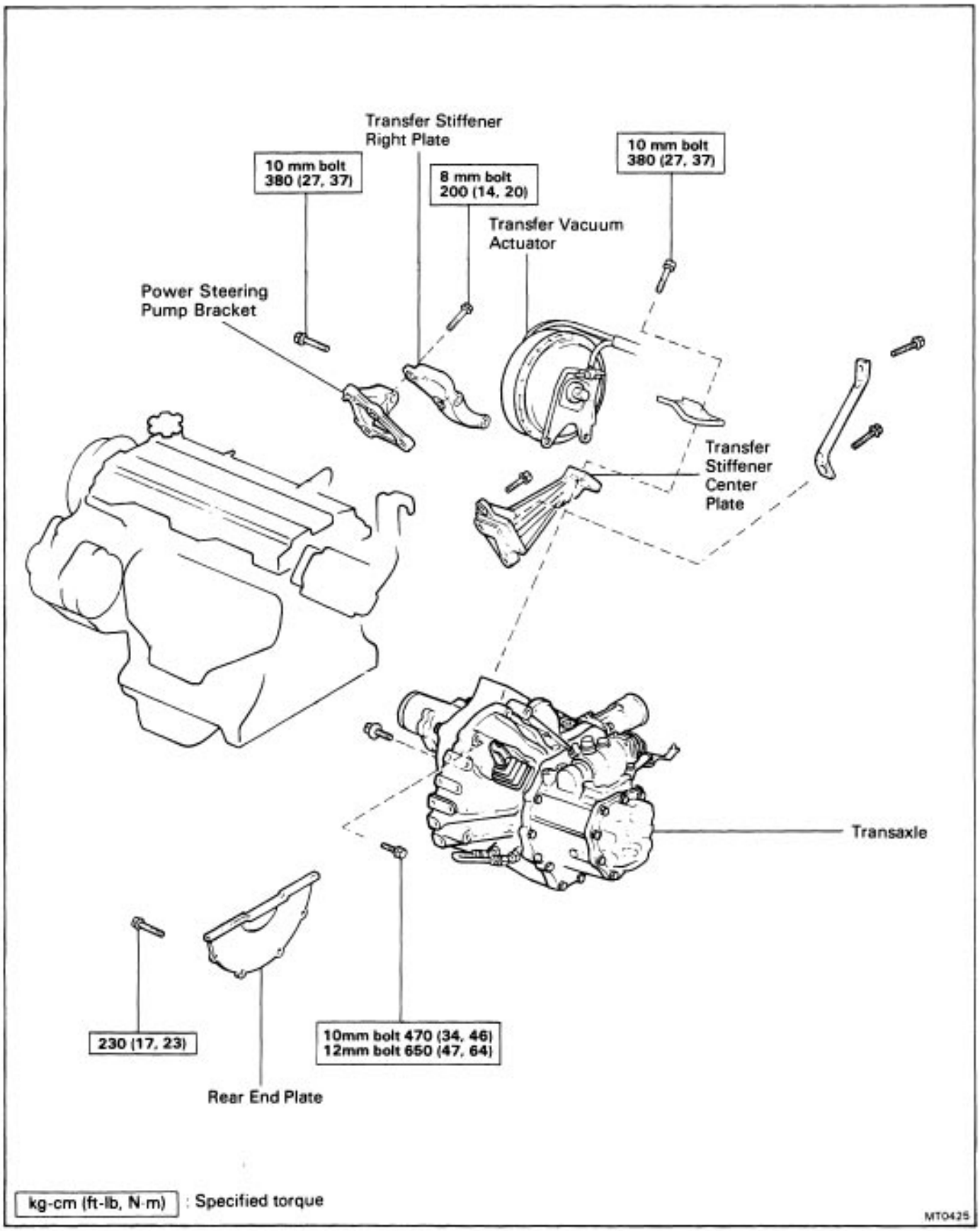

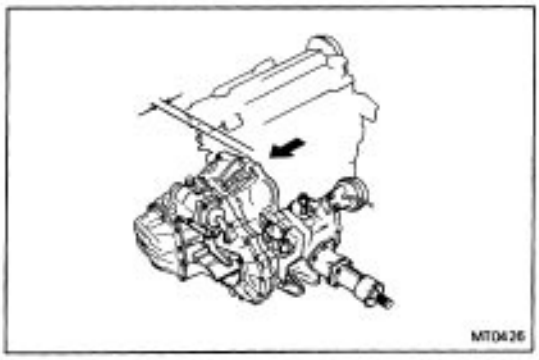

(MAIN POINT OF REMOVAL AND INSTALLATION)

1. REMOVE TRANSAXLE ASSEMBLY

HINT: When removing transaxle from engine, remove as the following procedure since cylinder block rib contacts transfer case.

(a) Pull the transaxle assembly straight out until there are space of 60 80 mm (2.36 3.15 in.) between engine and transaxle case.

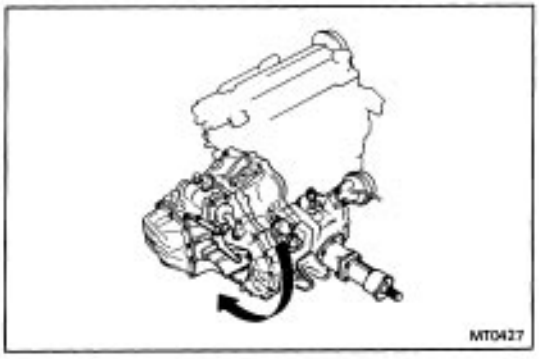

(b) Turn the transfer output shaft in the direction shown by the arrow.

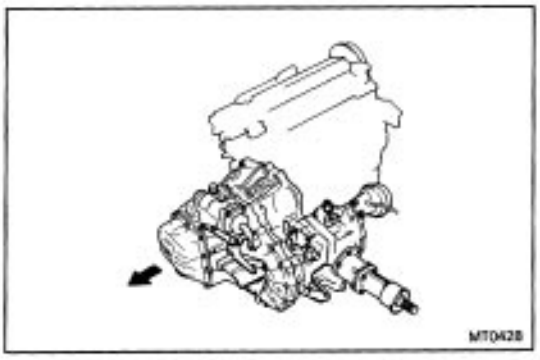

(c) While holding the transaxle, pull out whole transaxle.

2. INSTALL TRANSAXLE ASSEMBLY FOLLOWING REMOVAL SEQUENCE IN REVERSE

REPLACEMENT OF TRANSAXLE GEAR OIL

1. DRAIN TRANSAXLE OIL

2. FILL TRANSAXLE OIL WITH GEAR OIL

Oil: Transaxle oil E50 (08885–80206) or equivalent

Recommended oil

Oil grade: API GL–5

Viscosity: Above –18˚ C (0˚ F) SAE75W–90, 80W–90 or 90

Below –18˚ C (0˚ F) SAE75W–90, 80W–90 or 80W

Capacity: 5.0 liters (5.3 US qts, 4.4 Imp. qts)

REMOVAL OF COMPONENT PARTS

COMPONENTS

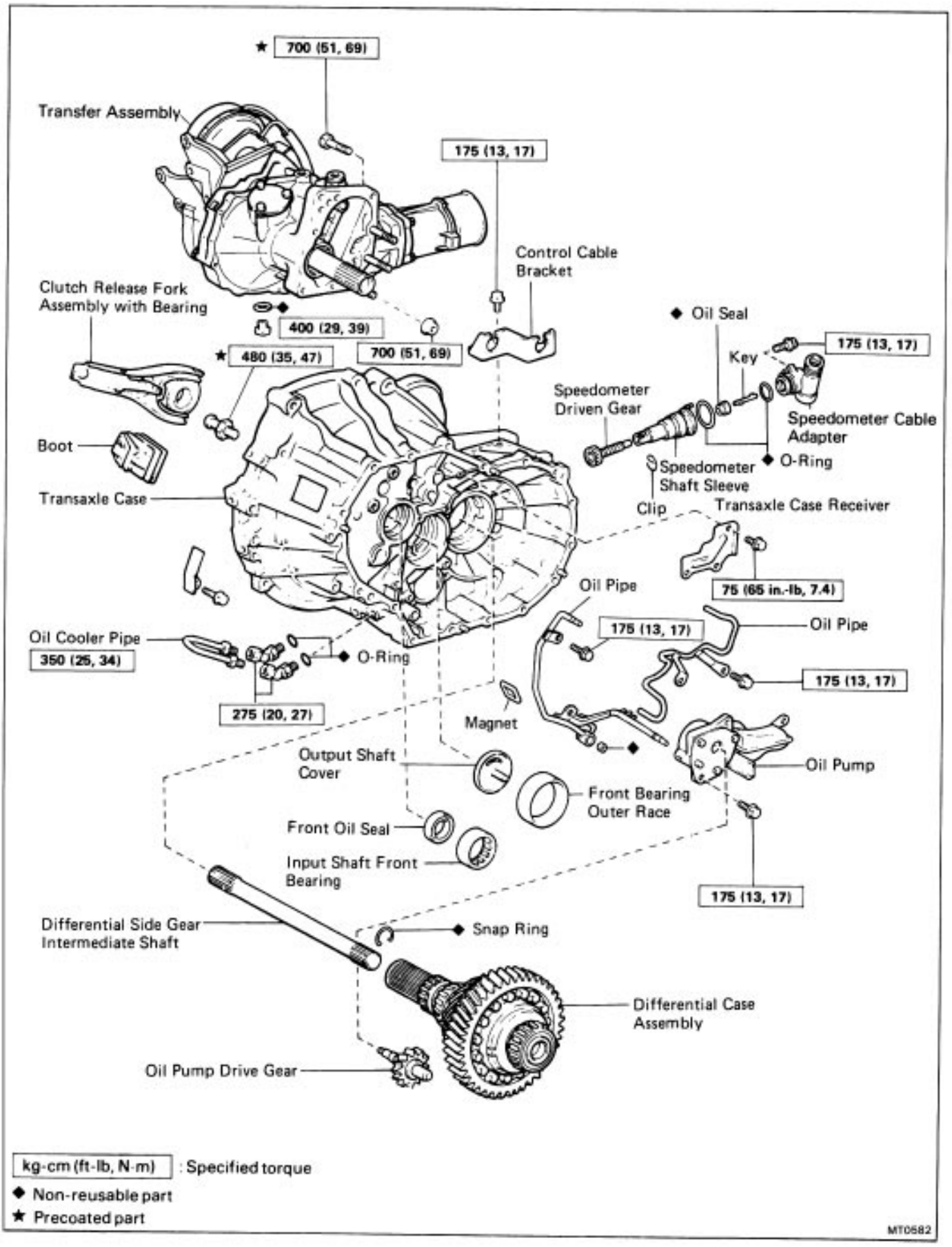

COMPONENTS (Cont'd)

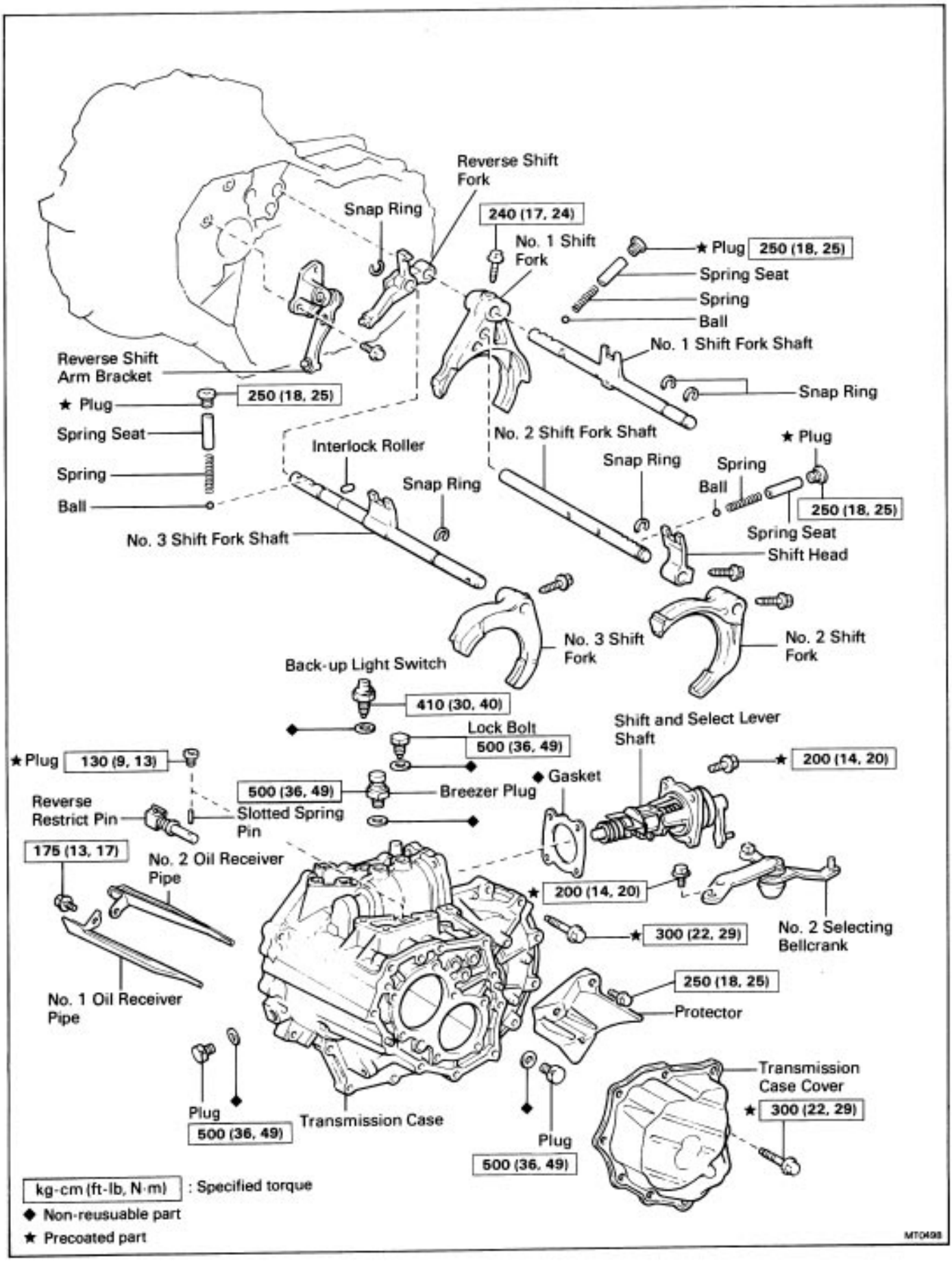

COMPONENTS (Cont'd)

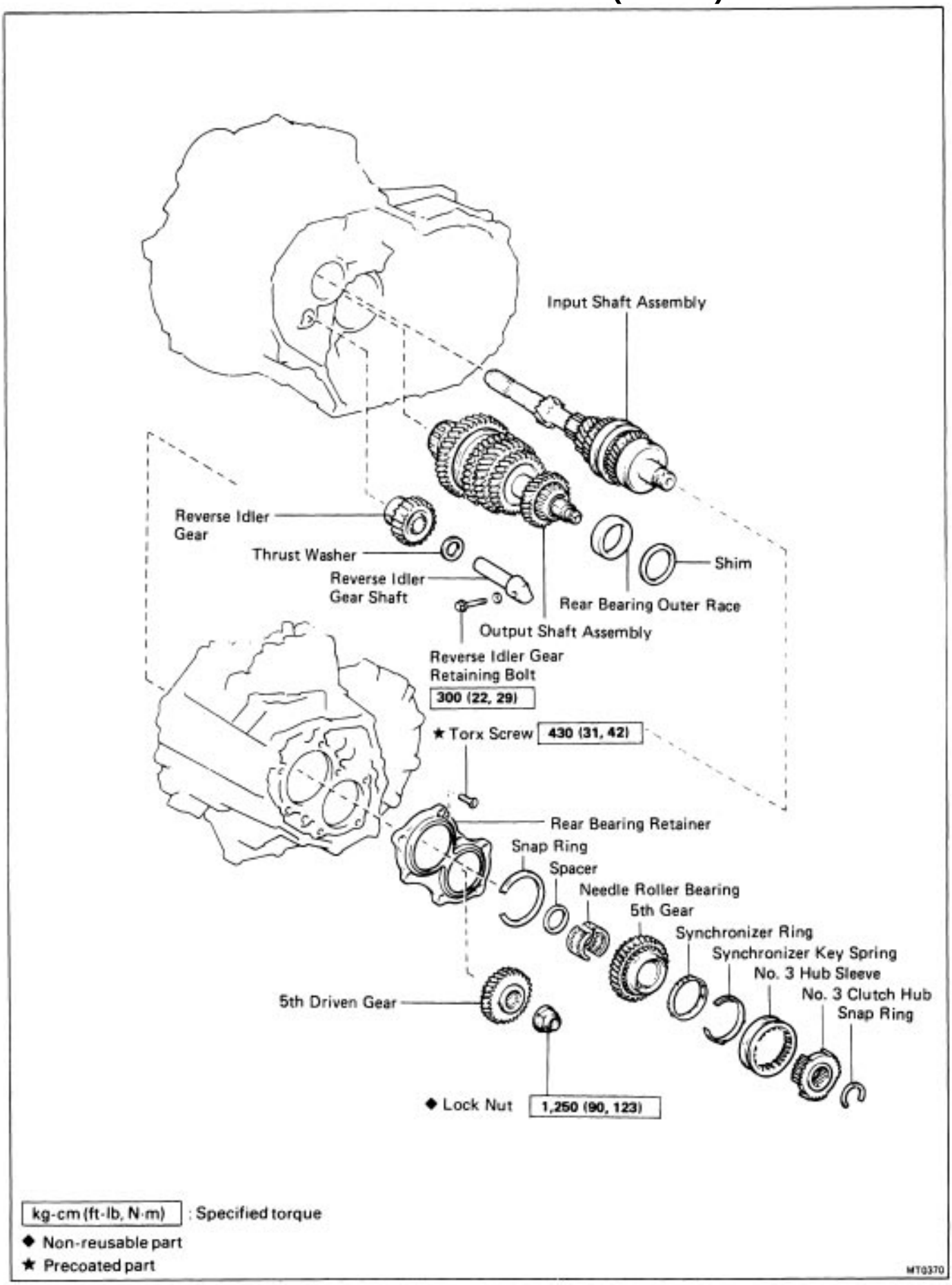

REMOVAL OF COMPONENT PARTS

(See pages MT–48 to MT–50)

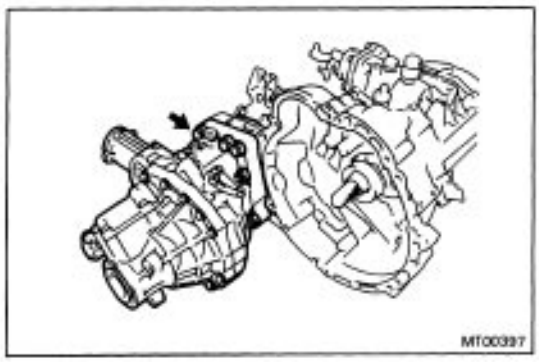

1. REMOVE TRANSFER ASSEMBLY

(a) Remove the three bolts and five nuts.

(b) Using a plastic hammer, remove the transfer assembly from the transaxle.

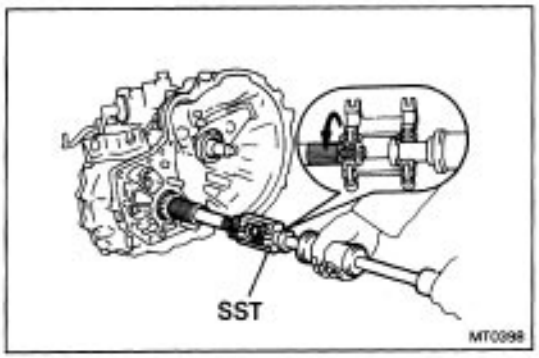

2. REMOVE DIFFERENTIAL SIDE GEAR INTERMEDIATE SHAFT

(a) Screw in a suitable bolt with washer into the side gear intermediate shaft.

(b) Using SST, remove the side gear intermediate shaft.

SST 09910–00015 (09911–00011, 09912–00010)

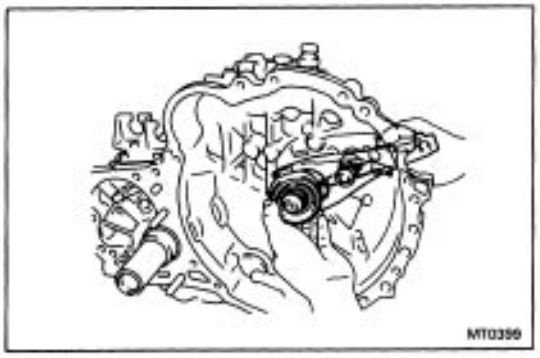

3. REMOVE RELEASE FORK, BEARING AND BOOT

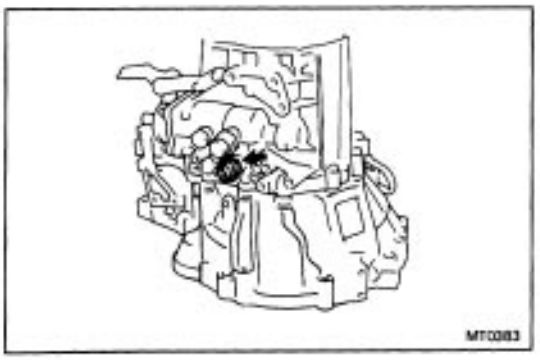

4. REMOVE BACK–UP LIGHT SWITCH

(a) Remove the back–up light switch.

(b) Remove the gasket from the back–up light switch.

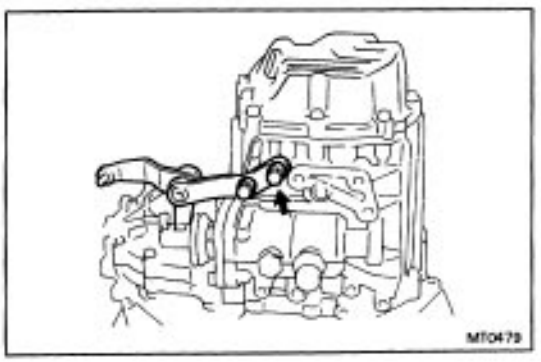

5. REMOVE SPEEDOMETER DRIVEN GEAR

6. REMOVE NO.2 SELECTING BELLCRANK WITH SELECTING BELLCRANK SUPPORT

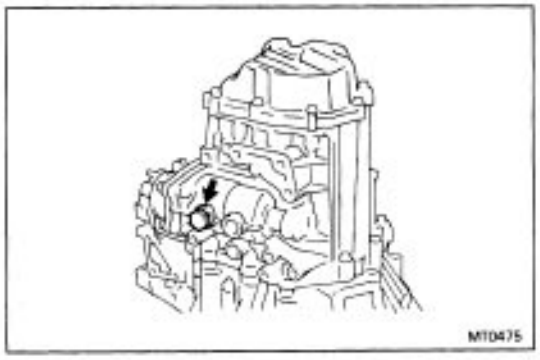

7. REMOVE SHIFT AND SELECT LEVER SHAFT LOCK BOLT

(a) Remove the shift and select lever shaft lock bolt.

(b) Remove the gasket from the bolt.

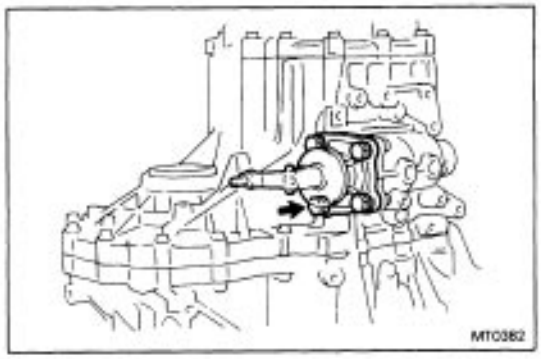

8. REMOVE SHIFT AND SELECT LEVER SHAFT ASSEMBLY

(a) Remove the four bolts and the shift and select lever shaft assembly.

(b) Remove the gasket from the shift and select lever shaft assembly.

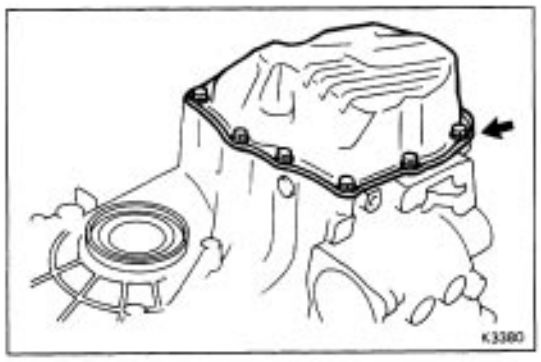

9. REMOVE TRANSMISSION CASE COVER

(a) Remove the ten bolts.

(b) Using a plastic hammer, remove the case cover.

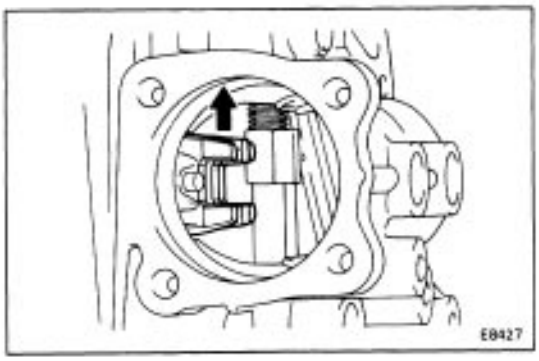

10. REMOVE OUTPUT SHAFT LOCK NUT

(a) Engage the gear double meshing.

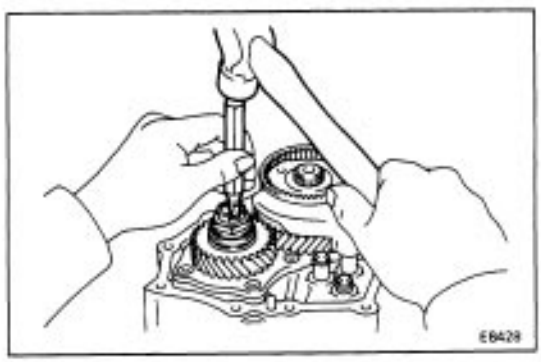

(b) Using a chisel and hammer, unstake the lock nut.

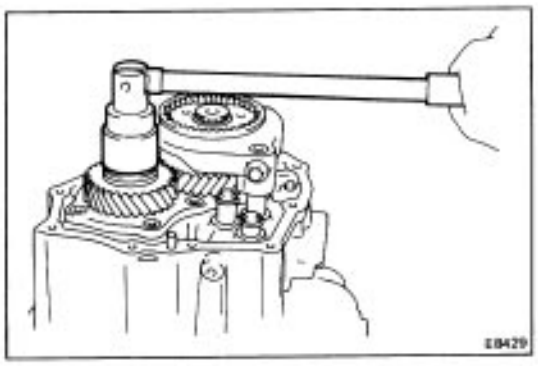

(c) Remove the lock nut.
(d) Disengage the gear double meshing.

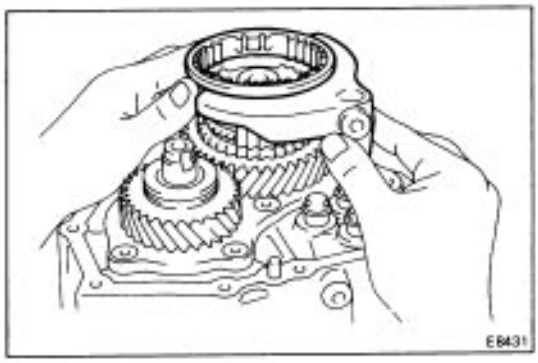

11. REMOVE NO. 3 HUB SLEEVE AND NO. 3 SHIFT FORK

(a) Remove the No. 3 shift fork set bolt.
(b) Remove the No. 3 hub sleeve and No. 3 shift fork.

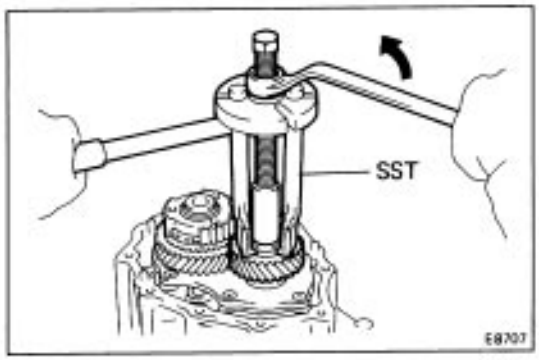

12. REMOVE FIFTH DRIVEN GEAR

Using SST, remove the 5th driven gear.
SST 09310–17010 (09310–07010, 09310–07020
09310–07040, 09310–07050)

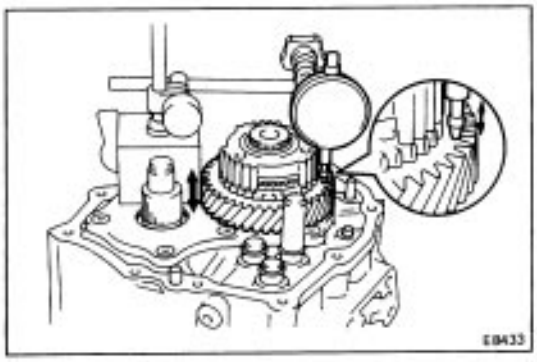

13. MEASURE FIFTH GEAR THRUST CLEARANCE

(a) Using a dial indicator, measure the thrust clearance.
Standard clearance: 0.10 – 0.57 mm
(0.0039 – 0.0224 in.)
Maximum clearance: 0.65 mm (0.0256 in.)

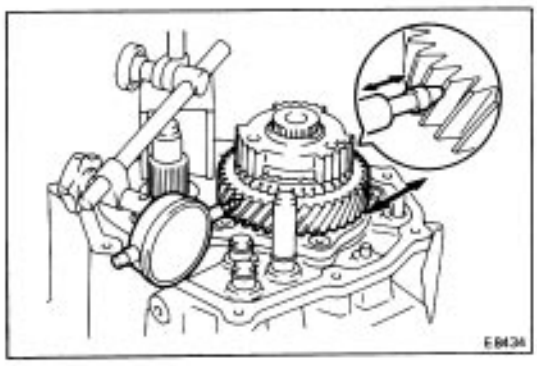

(b) Using a dial indicator, measure the oil clearance.
Standard clearance: 0.009 – 0.050 mm
(0.0004 – 0.0020 in.)
Maximum clearance: 0.070 mm (0.0028 in.)

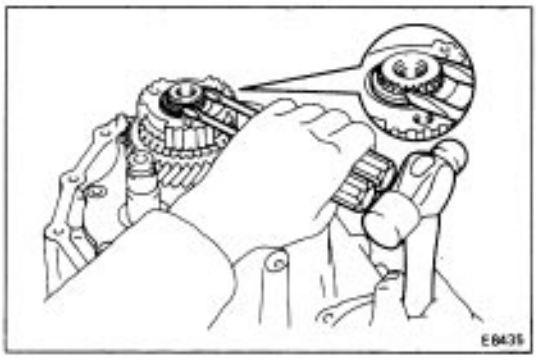

14. REMOVE NO. 3 CLUTCH HUB AND FIFTH GEAR

(a) Using two screwdrivers and a hammer, tap out the snap ring.

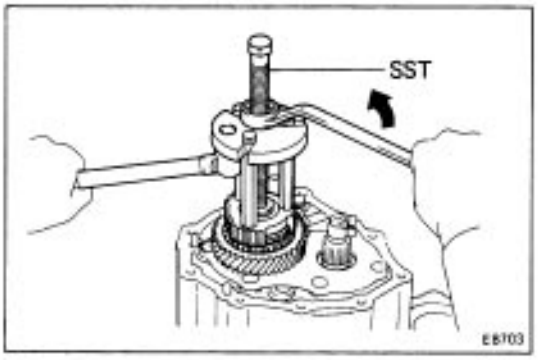

(b) Using SST, remove the No. 3 clutch hub with synchronizer ring and 5th gear.
SST 09310–17010
(09310–07010, 09310–07020, 09310–07030)

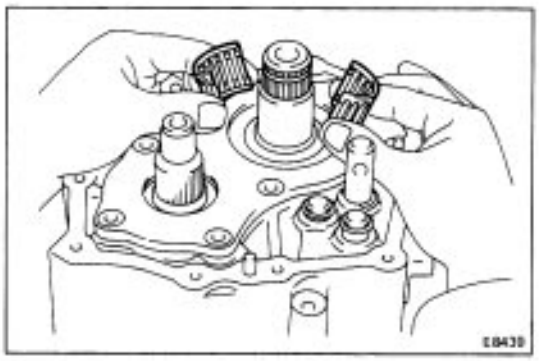

15. REMOVE NEEDLE ROLLER BEARING AND SPACER

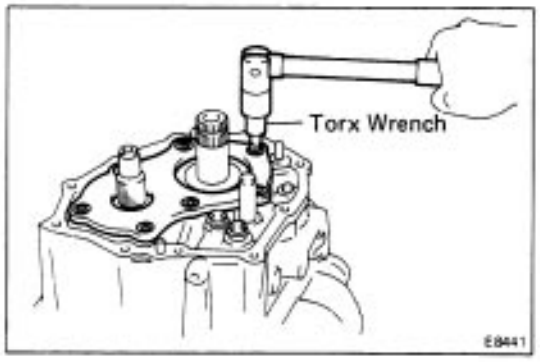

16. REMOVE REAR BEARING RETAINER

(a) Using a torx wrench, remove the seven torx screws and bearing retainer.
(Torx socket wrench T45 09042–00050)

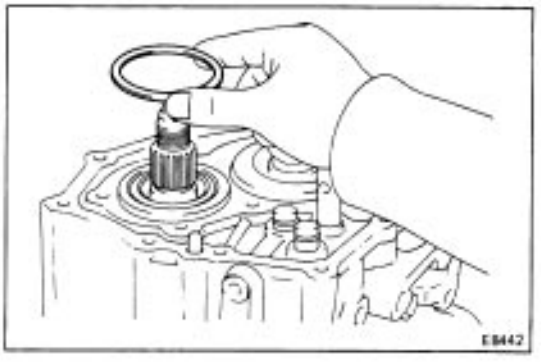

(b) Remove the adjusting shim.

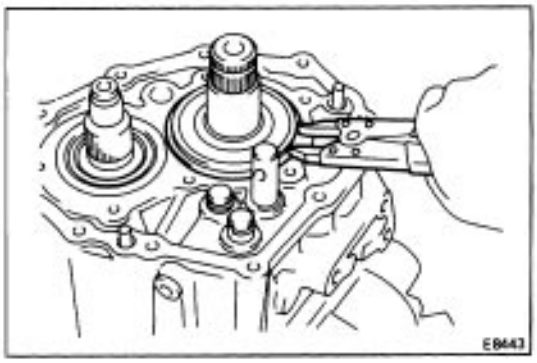

17. REMOVE SNAP RING

(a) Using snap ring pliers, remove the snap ring of the input shaft rear bearing.

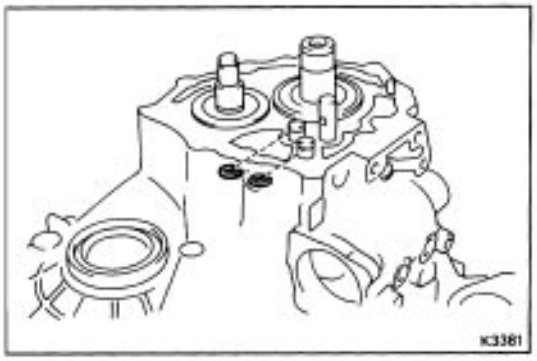

(b) Using two screwdrivers and a hammer, remove the two snap rings of the shift fork shafts.

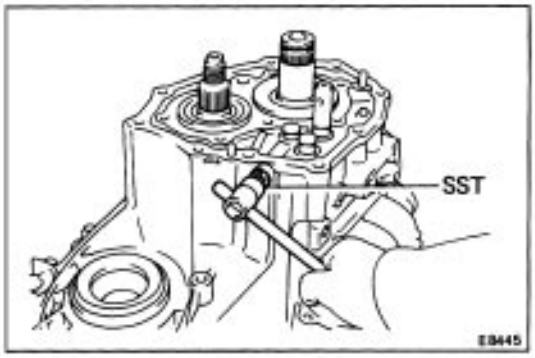

18. REMOVE PLUG, SEAT, SPRING AND LOCKING BALL

(a) Using SST, remove the plug.
SST 09313–30021

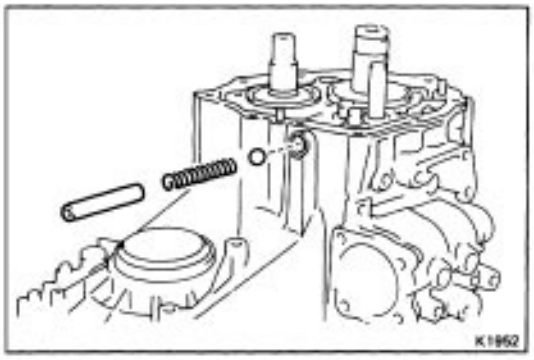

(b) Using a magnetic finger, remove the seat, spring and ball.

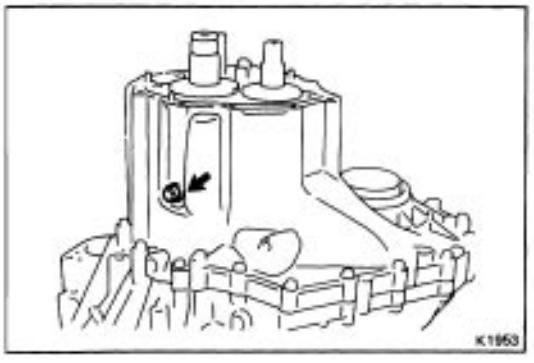

19. REMOVE REVERSE IDLER GEAR SHAFT RETAINING BOLT

(a) Remove the reverse idler gear shaft retaining bolt.
(b) Remove the gasket from the bolt.

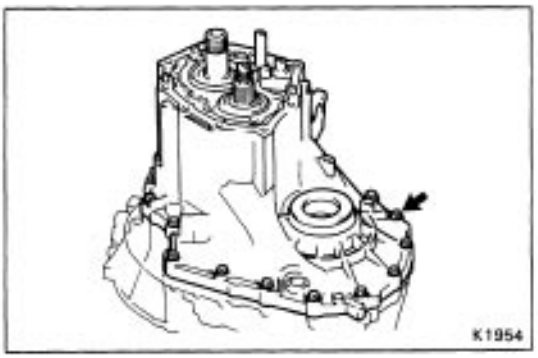

20. REMOVE TRANSMISSION CASE

Remove the seventeen bolts and tap off the case with a plastic hammer.

- Transmission case side: Fourteen bolts
- Transaxle case side: Three bolts

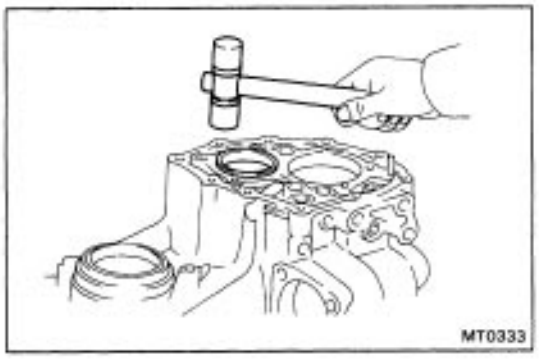

21. REMOVE OUTPUT SHAFT REAR BEARING OUTER RACE

Using a plastic hammer, remove the output shaft rear bearing outer race.

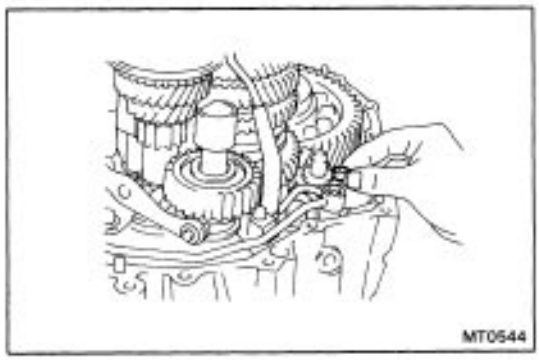

22. REMOVE NO. 2 OIL PIPE

(a) Remove the gasket.

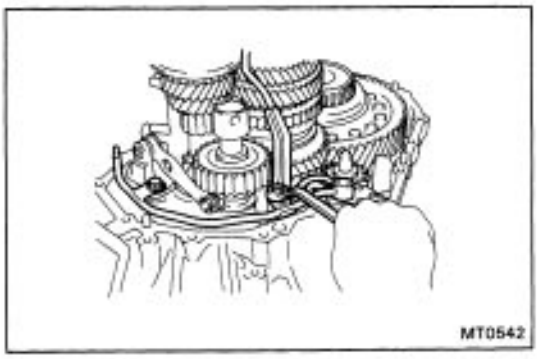

(b) Remove the two bolts and oil pipe.

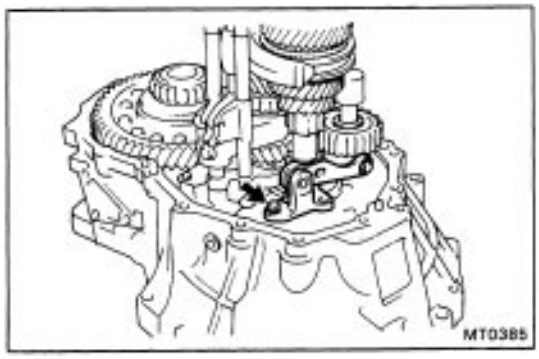

23. REMOVE REVERSE SHIFT ARM BRACKET

Remove the bolt and pull off the bracket.

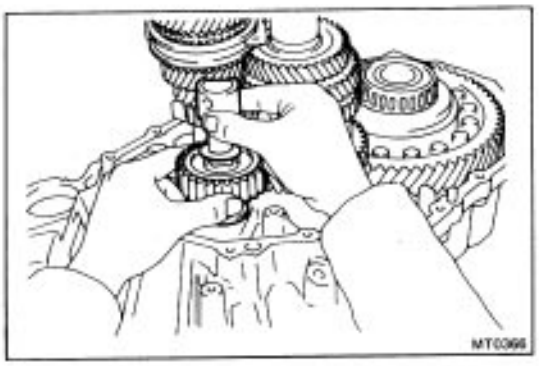

24. REMOVE REVERSE IDLER GEAR, THRUST WASHER AND SHAFT

Pull out the shaft, remove the reverse idler gear and thrust washer.

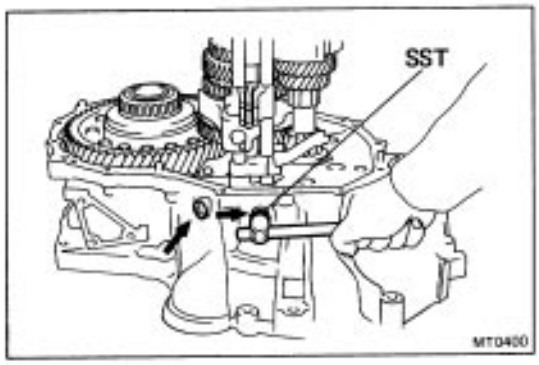

25. REMOVE PLUGS, SEATS, SPRINGS AND BALLS

(a) Using SST, remove the two plugs.
SST 09313–30021

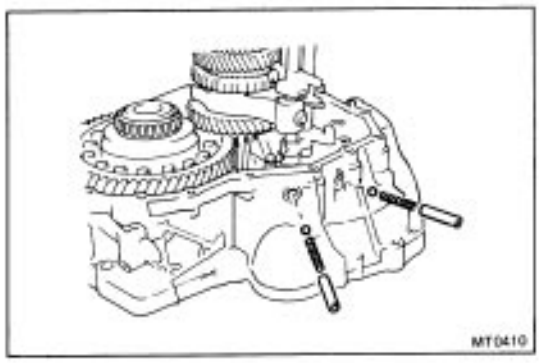

(b) Using a magnetic finger, remove the two seats, springs and balls.

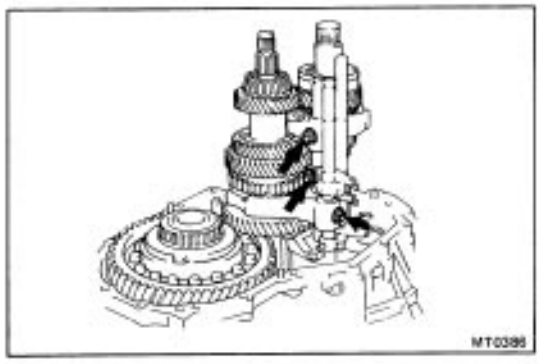

26. REMOVE SET BOLTS

Remove the three set bolts.

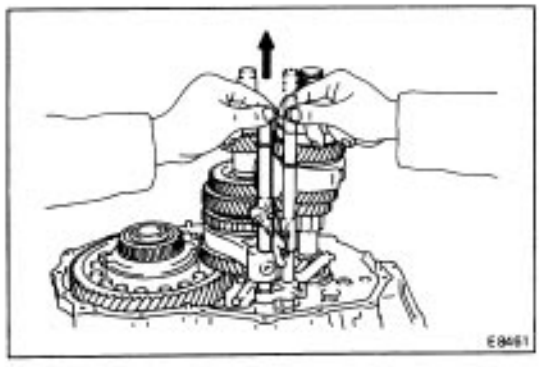

27. REMOVE NO. 1 SHIFT FORK SHAFT

Pull up No. 3 shift fork shaft, remove the No. 1 shift fork shaft.

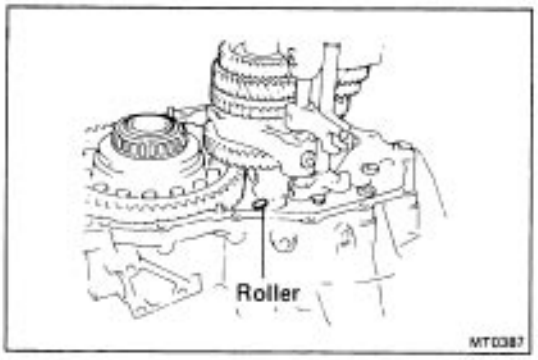

28. REMOVE INTERLOCK ROLLER

Using a magnetic finger, remove the interlock roller from the reverse shift fork.

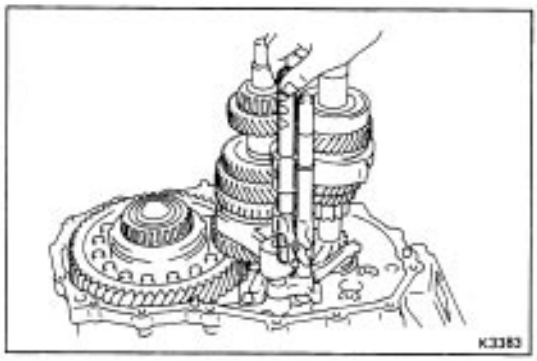

29. REMOVE NO. 2 SHIFT FORK SHAFT, SHIFT HEAD AND NO. 1 SHIFT FORK

(a) Pull out the No. 2 shift fork shaft.

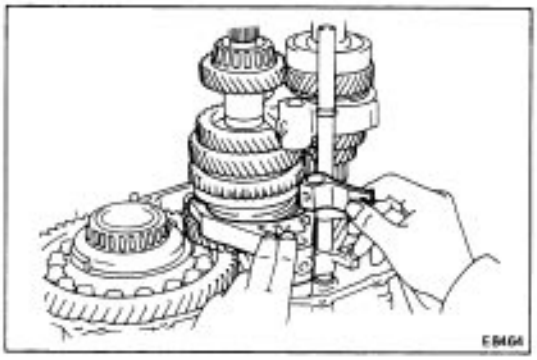

(b) Remove the shift head and No. 1 shift fork.

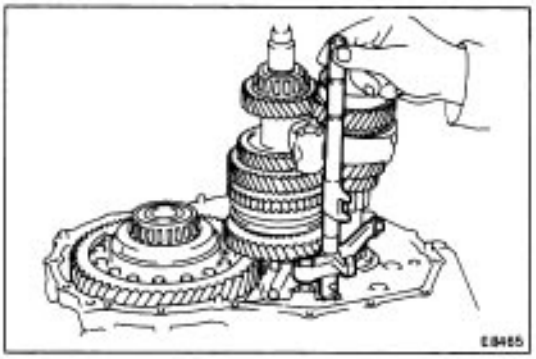

30. REMOVE NO. 3 SHIFT FORK SHAFT WITH REVERSE SHIFT FORK AND NO. 2 SHIFT FORK

(a) Pull out the No. 3 shift fork shaft with reverse shift fork.

(b) Remove the No. 2 shift fork.

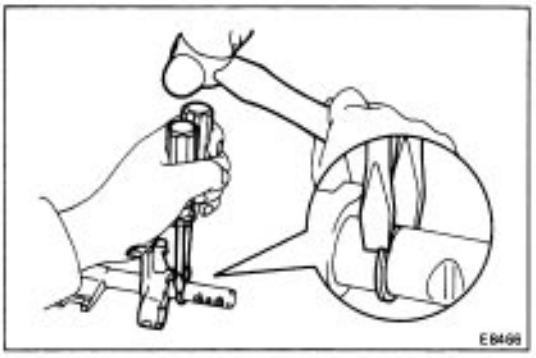

31. REMOVE SNAP RING

Using two screwdrivers and a hammer, remove the snap ring and reverse shift fork from the No. 3 shift fork shaft.

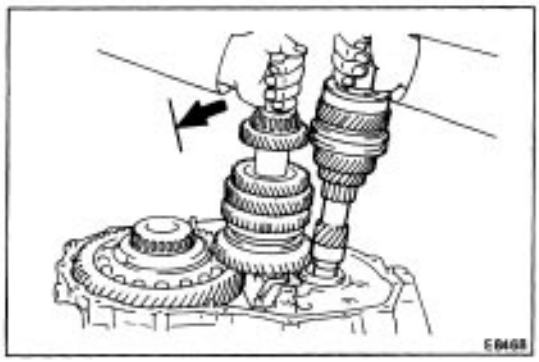

32. REMOVE INPUT AND OUTPUT SHAFT ASSEMBLY

(a) Leaning the output shaft to the differential side, remove the input shaft assembly.

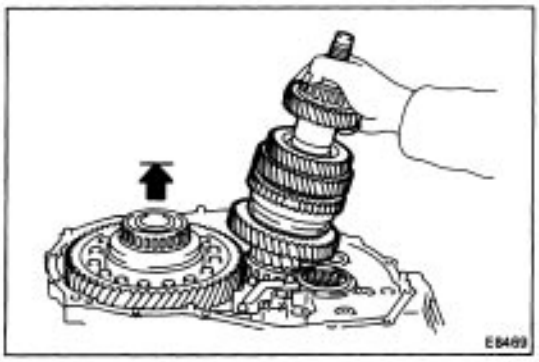

(b) Lift up the differential case assembly, remove the output shaft assembly.

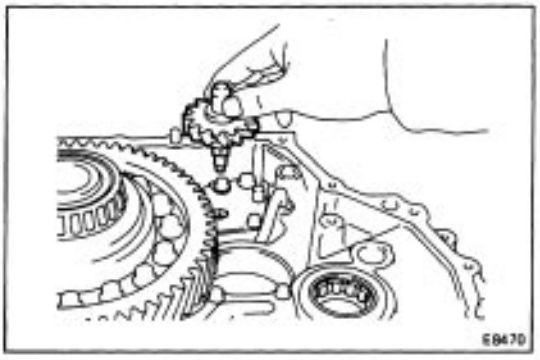

33. REMOVE DIFFERENTIAL CASE ASSEMBLY

(a) Remove the oil pump drive gear.

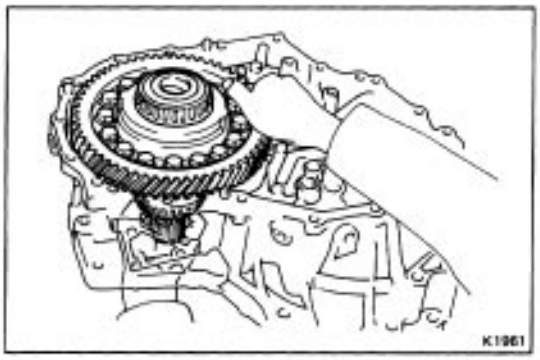

(b) Remove the differential case assembly.

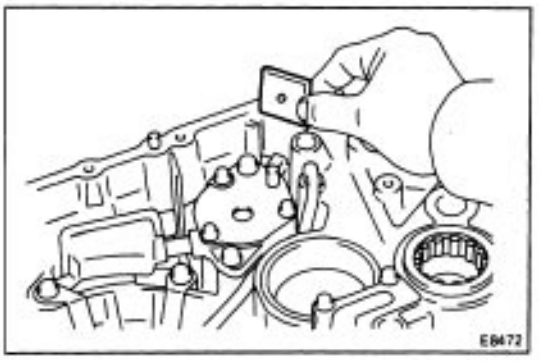

34. REMOVE MAGNET FROM TRANSAXLE CASE

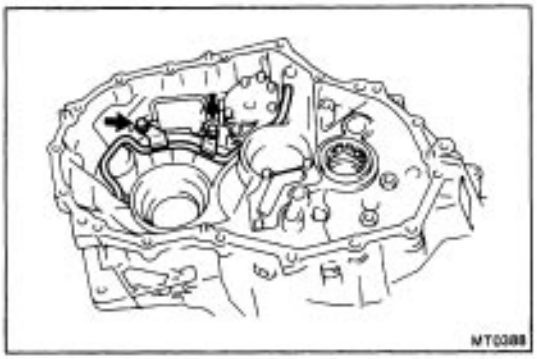

35. REMOVE OIL PUMP ASSEMBLY

(a) Remove the two bolts and oil pipe.

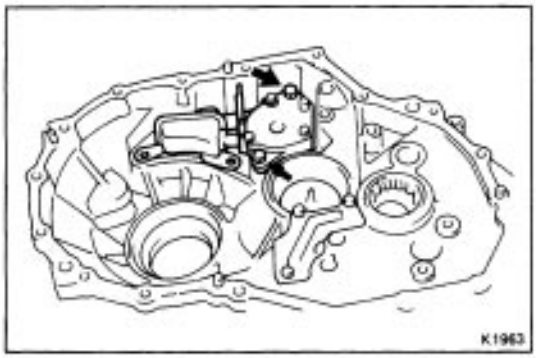

(b) Remove the two bolts and oil pump.

INSPECTION OF COMPONENT PARTS

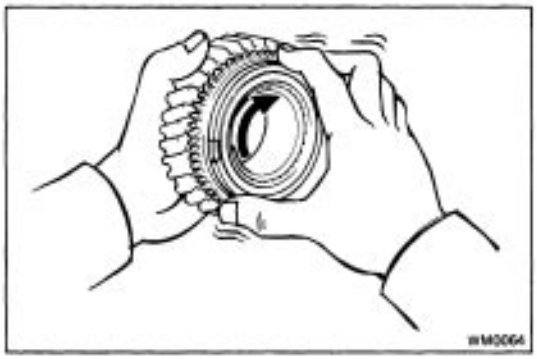

1. INSPECT SYNCHRONIZER RING OF FIFTH GEAR

(a) Check for wear or damage.

(b) Turn the ring and push it in to check the braking action.

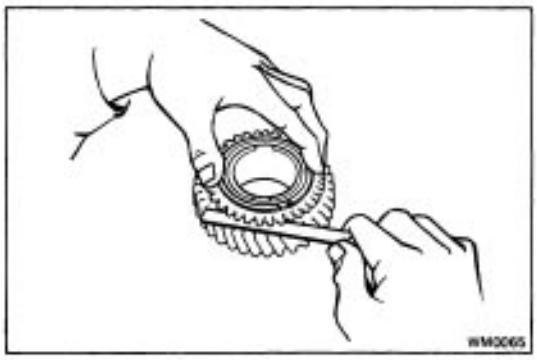

(c) Measure the clearance between the synchronizer ring back and the gear spline end.

Standard clearance: 0.75 – 1.65 mm (0.0295 – 0.0650 in.)

Minimum clearance: 0.6 mm (0.024 in.)

HINT: Inspect the clearance of the gear's whole circumference.

If the clearance is less than the limit, replace the synchronizer ring.

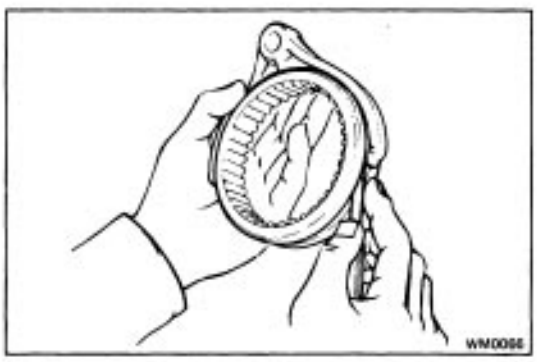

2. MEASURE CLEARANCE OF SHIFT FORK AND HUB SLEEVE

Using a feeler gauge, measure the clearance between the hub sleeve and shift fork.

Maximum clearance: 1.0 mm (0.039 in.)

If the clearance exceeds the limit, replace the shift fork or hub sleeve.

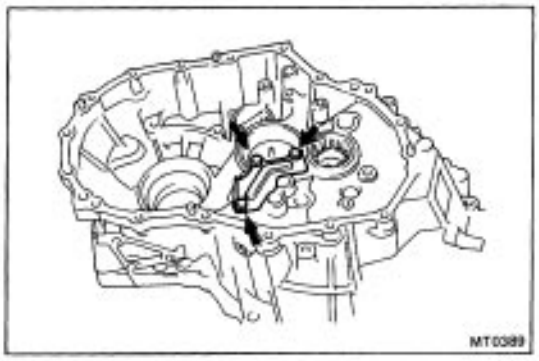

3. REMOVE TRANSAXLE CASE RECEIVER

Remove the three bolts and the transaxle case receiver.

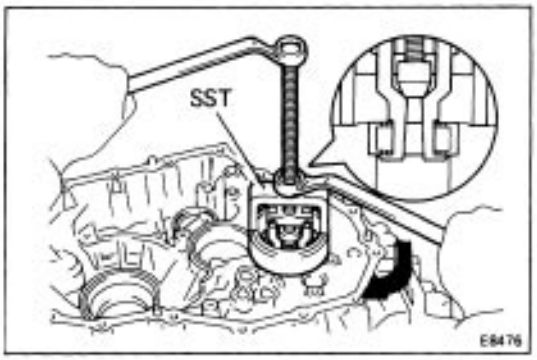

4. IF NECESSARY, REPLACE INPUT SHAFT FRONT BEARING AND OIL SEAL

(a) Using SST, pull out the bearing from the transaxle case.

SST 09612–65014 (09612–01020, 09612–01040)

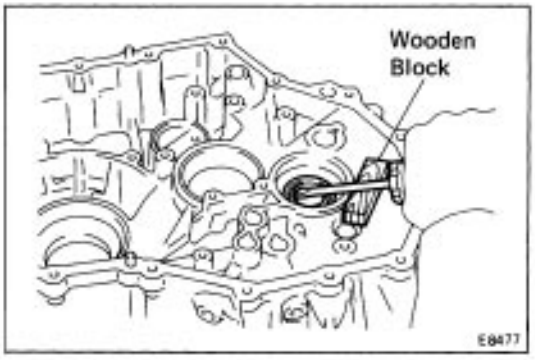

(b) Using a screwdriver, remove the oil seal.

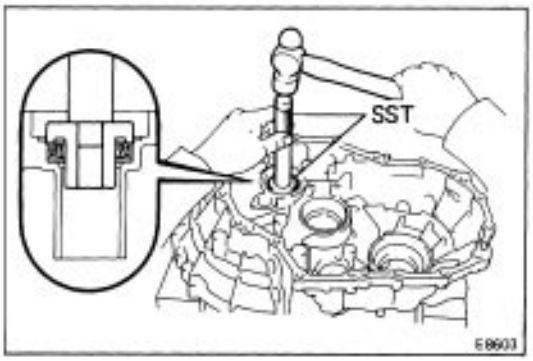

(c) Using SST, drive in a new oil seal.

SST 09608–12010 (09608–00020, 09608–00080)

(d) Coat the lip of oil seal with MP grease.

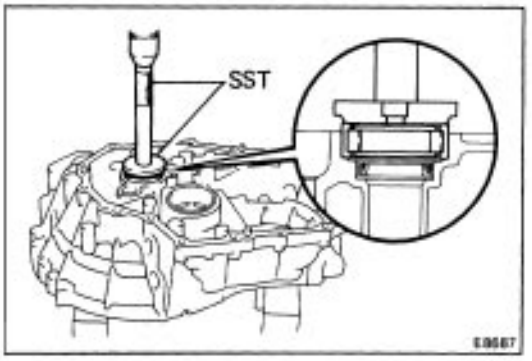

(e) Using SST, drive in a new bearing.

SST 09608–12010 (09608–00020, 09608–00060)

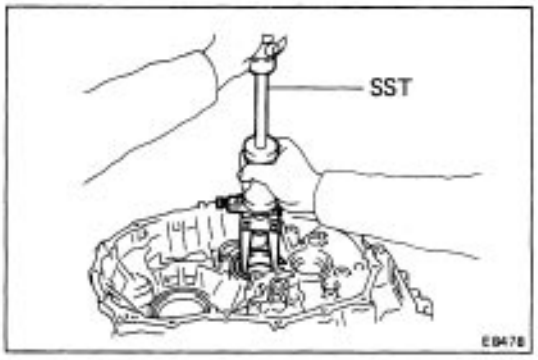

5. IF NECESSARY, REPLACE OUTPUT SHAFT FRONT BEARING OUTER RACE AND OUTPUT SHAFT COVER

(a) Using SST, pull out the outer race.
SST 09308–00010

(b) Remove the output shaft cover.

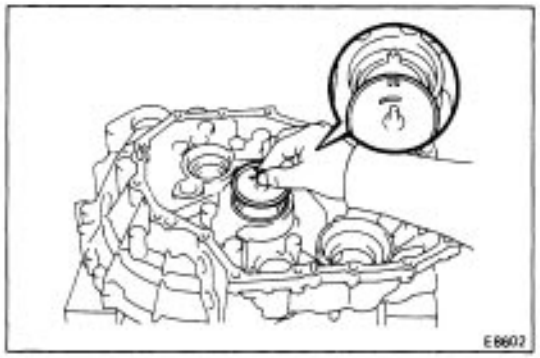

(c) Install the output shaft cover.
HINT: Install the output shaft cover projection into the case side groove.

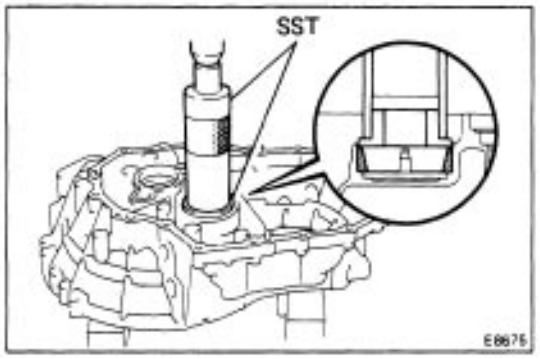

(d) Using SST, press in a new outer race.
SST 09316–60010 (09316–00010, 09316–00020)

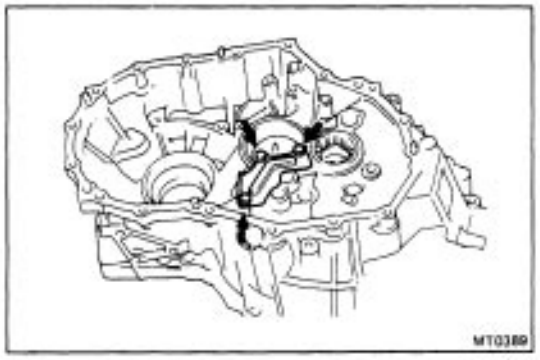

6. INSTALL AND TORQUE TRANSAXLE CASE RECEIVER
Torque: 75 kg–cm (65 in.–lb, 7.4 N–m)

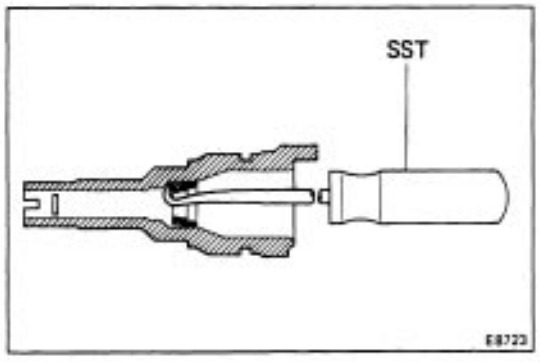

7. IF NECESSARY, REPLACE SPEEDOMETER DRIVEN GEAR OIL SEAL

(a) Using SST, pull out the oil seal.
SST 09921–00010

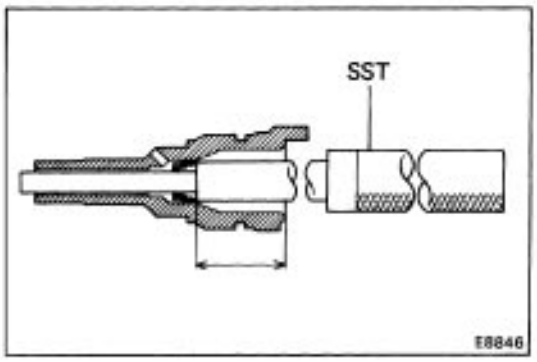

(b) Using SST, drive in a new oil seal.
SST 09201–60011
Drive in depth: 32.4 – 33 mm (1.28 – 1.30 in.)
(c) Coat the lip of oil seal with MP grease.

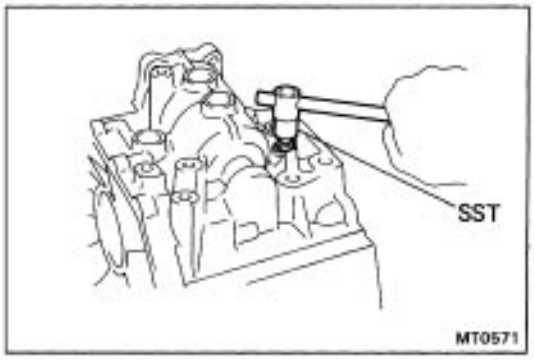

8. IF NECESSARY, REPLACE REVERSE RESTRICT PIN
(a) Using SST, remove the screw plug.
SST 09313–30021

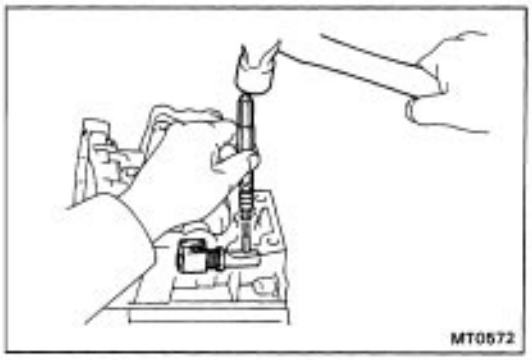

(b) Using a pin punch and hammer, drive out the slotted spring pin.

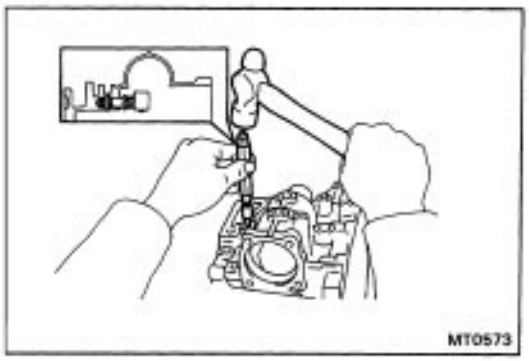

(c) Replace the reverse restrict pin.
(d) Using a pin punch, drive in the slotted spring pin.

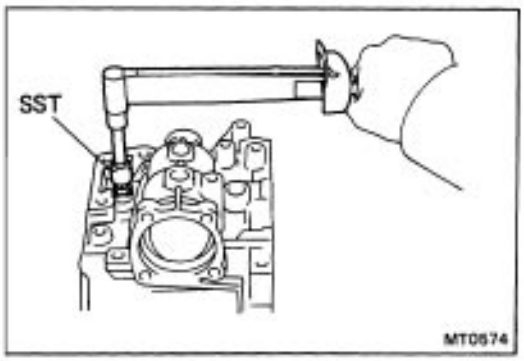

(e) Apply liquid sealant to the plug threads.
Sealant: Part No. 08833–00080, THREE BOND 1344, LOCTITE 242 or equivalent
(f) Using SST, install the screw plug.
SST 09313–30021

COMPONENT PARTS

Input Shaft Assembly

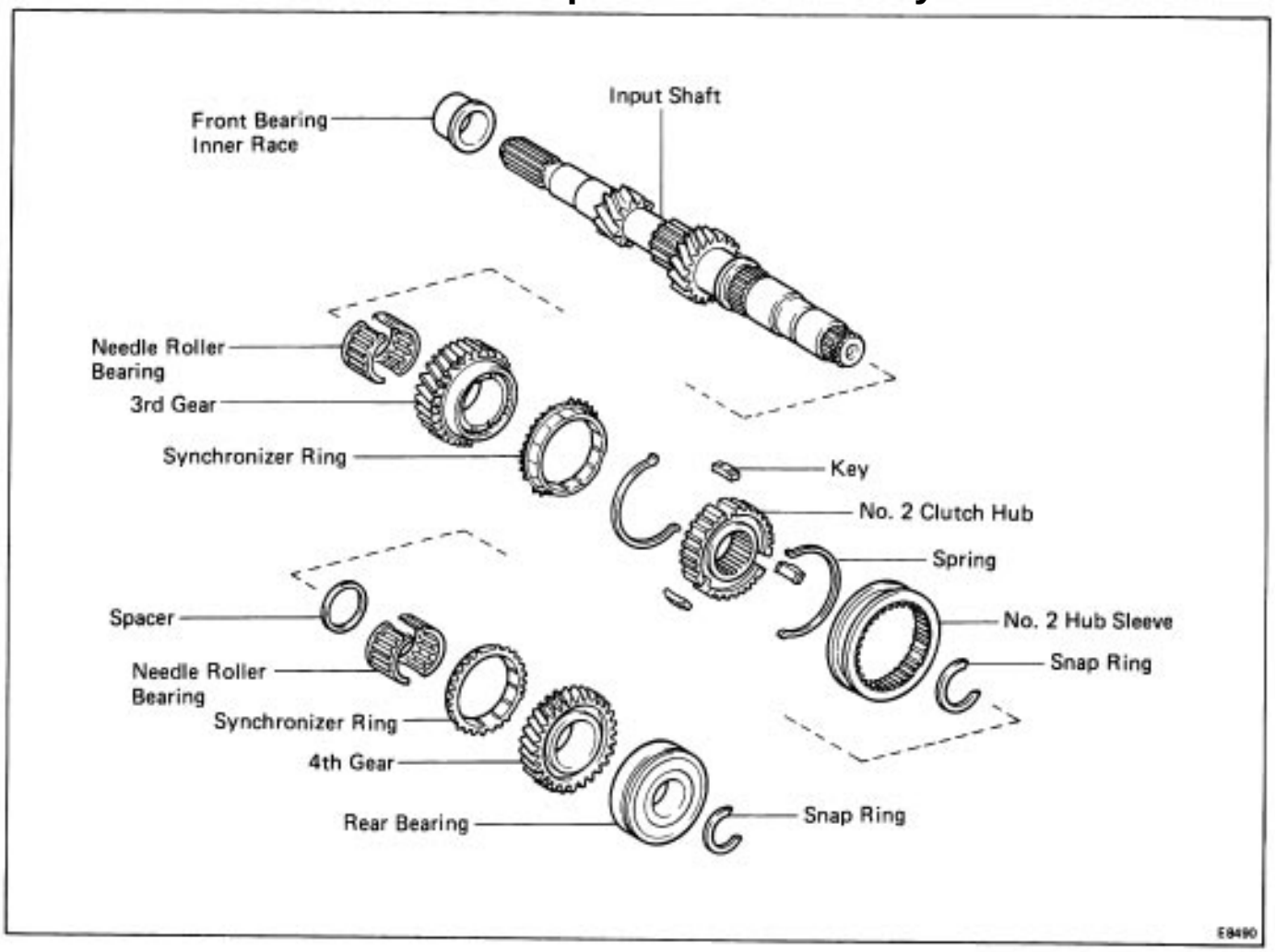

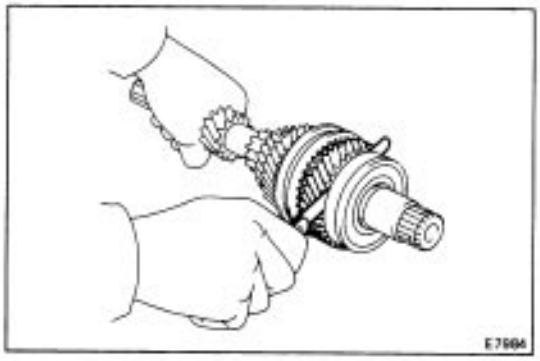

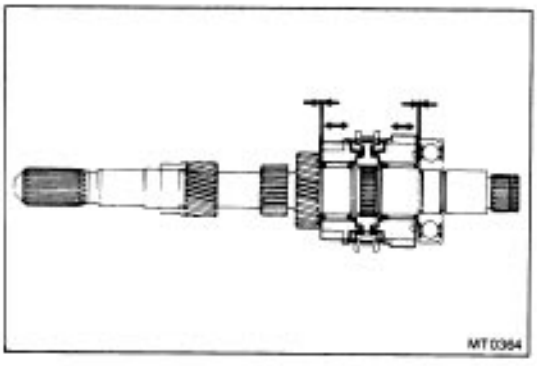

DISASSEMBLY OF INPUT SHAFT ASSEMBLY

1. MEASURE THIRD AND FOURTH GEAR THRUST CLEARANCE

Using a feeler gauge, measure the thrust clearance.

Standard clearance:

3rd gear	**0.10 – 0.35 mm (0.0039 – 0.0138 in.)**
4th gear	**0.10 – 0.45 mm (0.0039 – 0.0177 in.)**

Maximum clearance:

3rd gear	**0.40 mm (0.0157 in.)**
4th gear	**0.60 mm (0.0236 in.)**

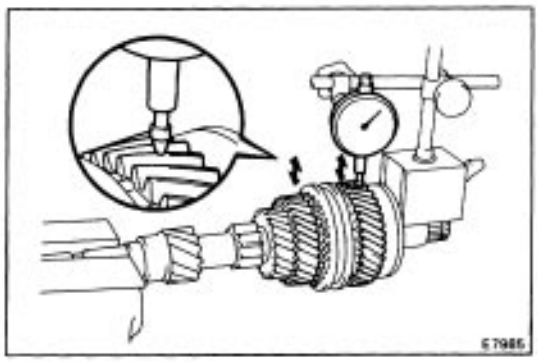

2. CHECK OIL CLEARANCE OF THIRD AND FOURTH GEAR

Using dial indicator, measure the oil clearance between the gear and shaft.

Standard clearance:

3rd gear	**0.009 – 0.051 mm (0.0004 – 0.0020 in.)**
4th gear	**0.009 – 0.051 m m (0.0004 – 0.0020 in.)**
Maximum clearance:	**0.080 mm (0.003 in.)**

If clearance exceeds the limit, replace the gear, needle roller bearing or shaft.

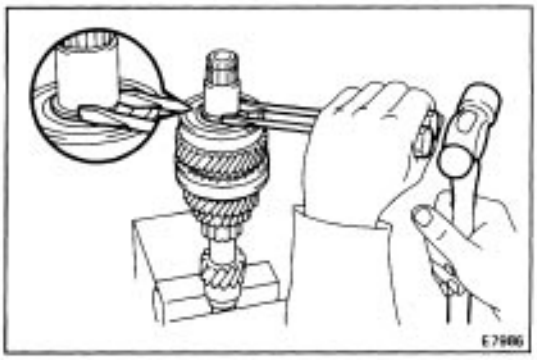

3. REMOVE SNAP RING

Using two screwdrivers and a hammer, tap out the snap ring.

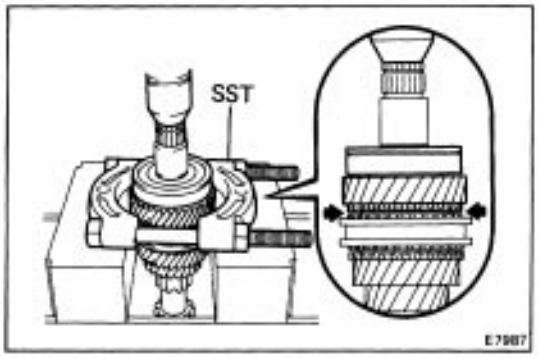

4. REMOVE INPUT SHAFT REAR BEARING AND FOURTH GEAR

Using SST and a press, remove the input shaft rear bearing.

SST 09950–00020

5. REMOVE NEEDLE ROLLER BEARINGS, SPACER AND SYNCHRONIZER RING

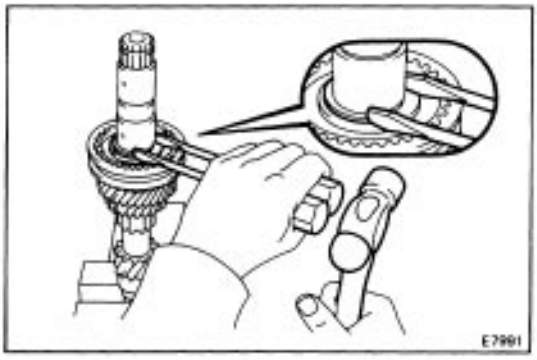

6. REMOVE SNAP RING

Using two screwdrivers and a hammer, tap out the snap ring.

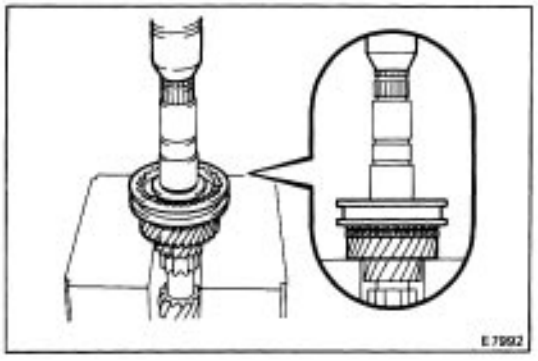

7. REMOVE NO. 2 CLUTCH HUB ASSEMBLY, SYNCHRONIZER RING AND THIRD GEAR

Using a press, remove No. 2 hub sleeve, 3rd gear, synchronizer ring and needle roller bearings.

8. REMOVE NEEDLE ROLLER BEARING

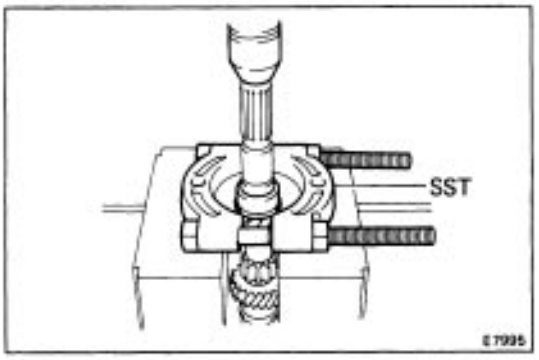

9. REMOVE INPUT SHAFT FRONT BEARING INNER RACE

Using SST and a press, remove the inner race.
SST 09950–00020

INSPECTION OF INPUT SHAFT COMPONENT PARTS

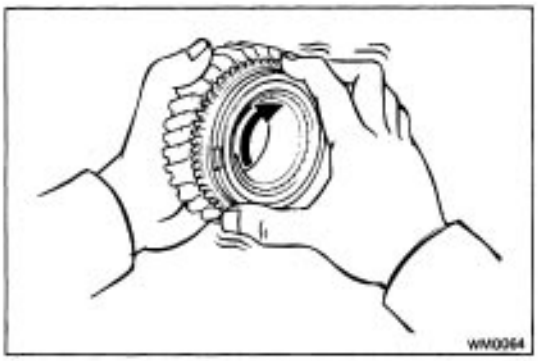

1. INSPECT SYNCHRONIZER RINGS

(a) Check for wear or damage.
(b) Turn the ring and push it in to check the bearing action.

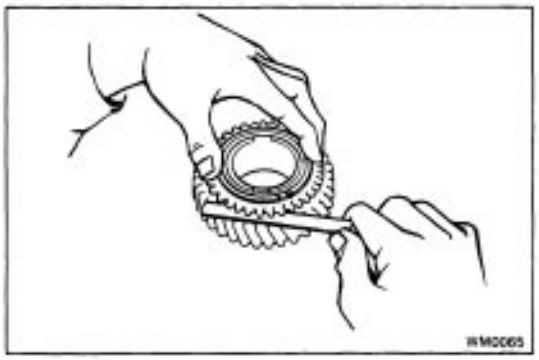

(c) Measure the clearance between the synchronizer ring back and gear spline end.

Minimum clearance: 0.6 mm (0.024 in.)

If the clearance is less than the limit, replace the synchronizer ring.

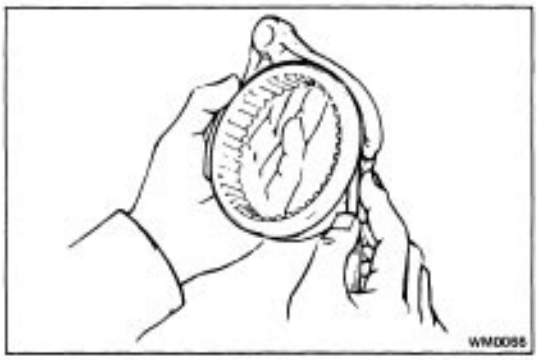

2. MEASURE CLEARANCE OF NO. 2 SHIFT FORK AND HUB SLEEVE

Using a feeler gauge, measure the clearance between the hub sleeve and shift fork.

Maximum clearance: 1.0 mm (0.039 in.)

If the clearance exceeds the limit, replace the shift fork or hub sleeve.

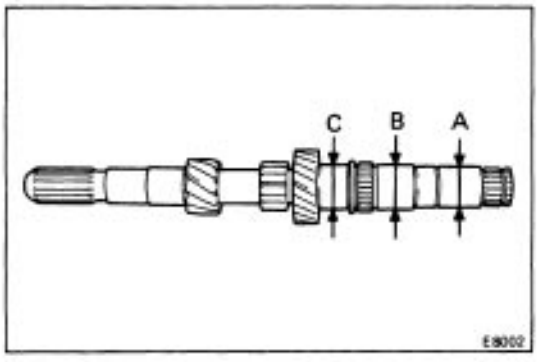

3. INSPECT INPUT SHAFT

(a) Check the input shaft for wear or damage.
(b) Using a micrometer, measure the outer diameter of the input shaft journal surface.

Minimum outer diameter:

Part A 32.930 mm (1.2964 in.)
B and C 35.950 mm (1.4154 in.)

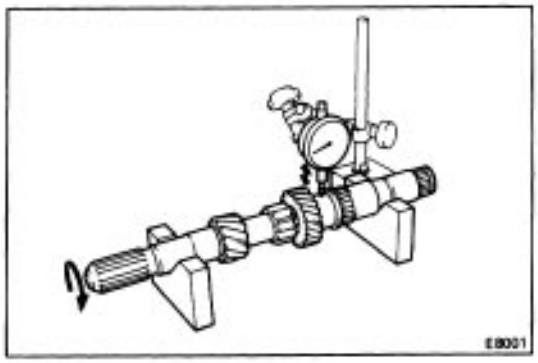

(c) Using a dial indicator, check the shaft runout.

Maximum runout: 0.060 mm (0.0024 in.)

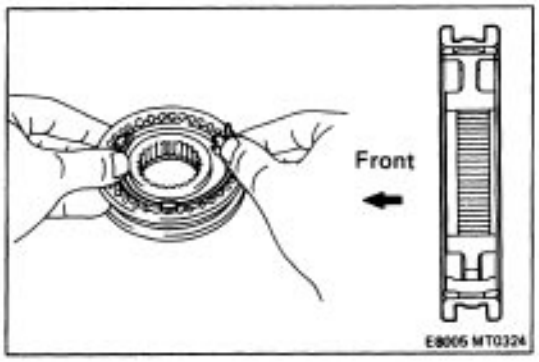

ASSEMBLY OF INPUT SHAFT ASSEMBLY

(See page MT–62)

HINT: Coat all the sliding and rotating surface with gear oil before assembly.

1. INSERT NO. 2 CLUTCH HUB SLEEVE

(a) Install the clutch hub and shifting keys to the hub sleeve.

(b) Install the shifting key springs under the shifting keys.

NOTICE: Install the key spring positioned so that their end gaps are not in line.

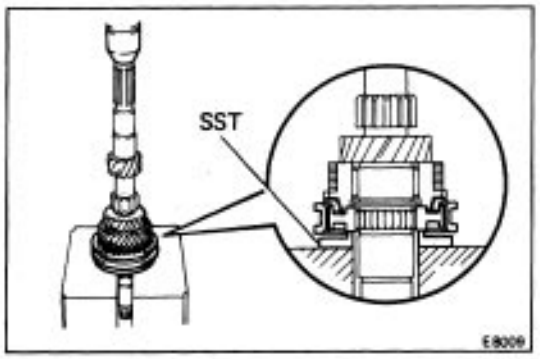

2. INSTALL NEEDLE ROLLER BEARING, THIRD GEAR, SYNCHRONIZER RING AND NO. 2 HUB SLEEVE ASSEMBLY TO INPUT SHAFT

(a) Apply MP grease to the needle roller bearings.

(b) Install the 3rd gear.

(e) Place the synchronizer ring on the gear and align the ring slots with the shifting keys.

(d) Using SST and a press, install the 3rd gear and No. 2 hub sleeve.

SST 09506–35010

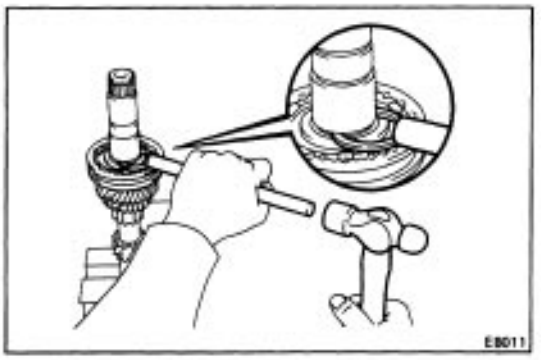

3. INSTALL SNAP RING

Select a snap ring that will allow minimum axial play and install it on the shaft.

Snap ring thickness:

Mark	Thickness	mm (in.)
H	2.30 – 2.35	(0.0906 – 0.0925)
J	2.35 – 2.40	(0.0925 – 0.0945)
K	2.40 – 2.45	(0.0945 – 0.0965)
L	2.45 – 2.50	(0.0965 – 0.0984)
M	2.50 – 2.55	(0.0984 – 0.1004)
N	2.55 – 2.60	(0.1004 – 0.1024)
P	2.60 – 2.65	(0.1024 – 0.1043)

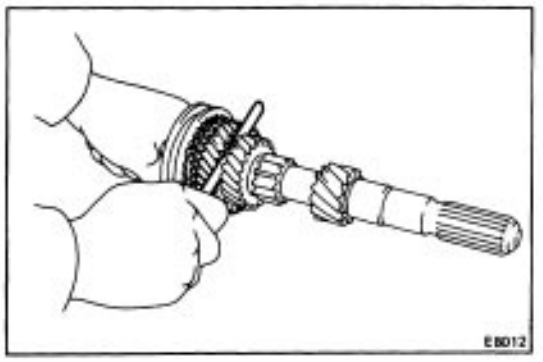

4. MEASURE THIRD GEAR THRUST CLEARANCE

Using a feeler gauge, measure the 3rd gear thrust clearance.

Standard clearance: 0.10 – 0.35 m n(0.0039 – 0.0138 in.)

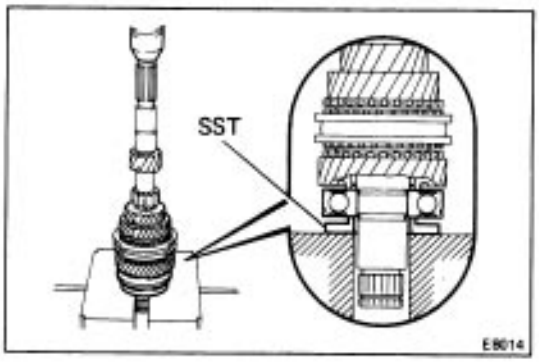

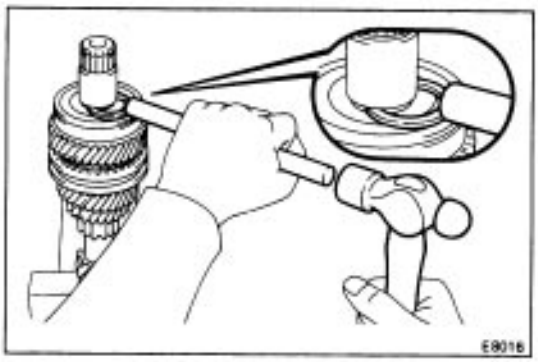

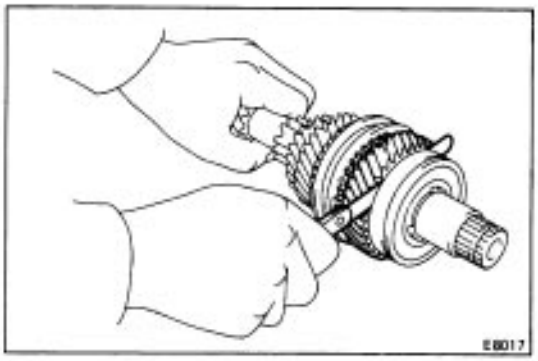

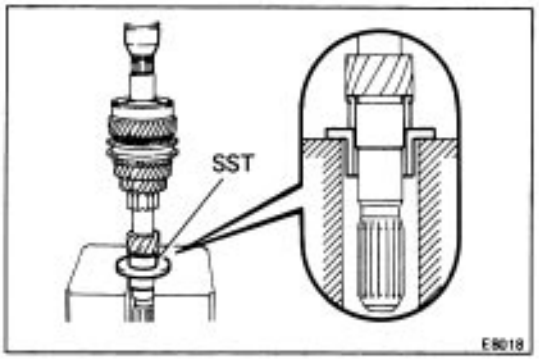

5. INSTALL SPACER, SYNCHRONIZER RING, NEEDLE ROLLER BEARINGS, FOURTH GEAR AND RADIAL BALL BEARING

(a) Install the spacer.
(b) Apply MP grease to the needle roller bearings.
(c) Place the synchronizer ring on the gear and align the ring slots with the shifting keys.
(d) Install the 4th gear.
(e) Using SST and a press, install the radial ball bearing.
SST 09506–35010

6. INSTALL SNAP RING

Select a snap ring that will allow minimum axial play and install it on the shaft.
Snap ring thickness:

Mark	Thickness	mm (in.)
1	2.35 – 2.40	(0.0925 – 0.0945)
2	2.40 – 2.45	(0.0945 – 0.0965)
3	2.45 – 2.50	(0.0965 – 0.0984)
4	2.50 – 2.55	(0.0984 – 0.1004)
5	2.55 – 2.60	(0.1004 – 0.1024)
6	2.60 – 2.65	(0.1024 – 0.1043)
7	2.65 – 2.70	(0.1043 – 0.1063)
8	2.70 – 2.75	(0.1063 – 0.1083)

7. MEASURE FOURTH GEAR THRUST CLEARANCE

Using a feeler gauge, measure the 4th gear thrust clearance.
Standard clearance: 0.10 – 0.55 mm (0.0039 – 0.0217 in.)

8. INSTALL INPUT SHAFT FRONT BEARING INNER RACE

Using SST and a press, install the input shaft front bearing inner race.
SST 09316–60010 (09316–00020)

Output Shaft Assembly

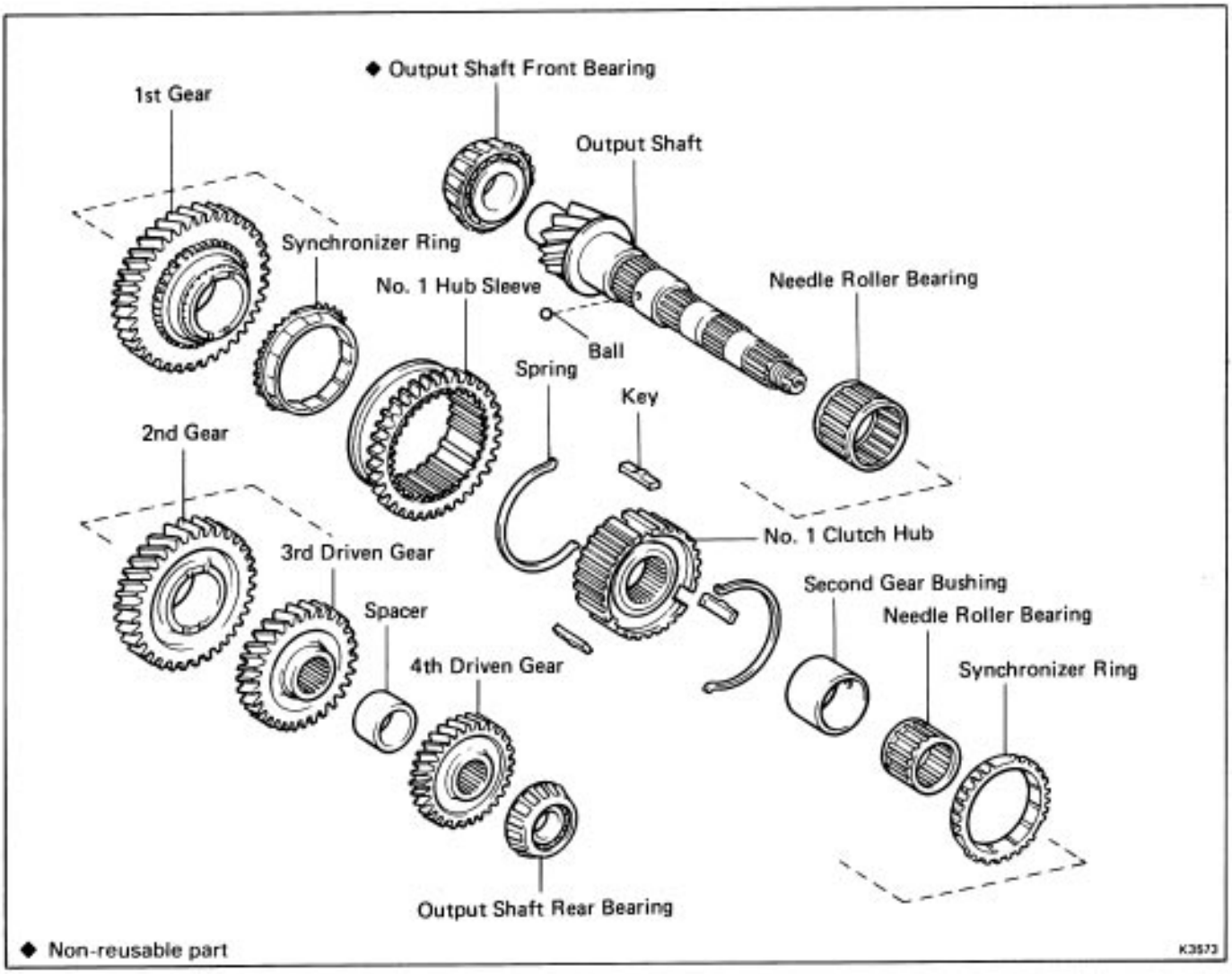

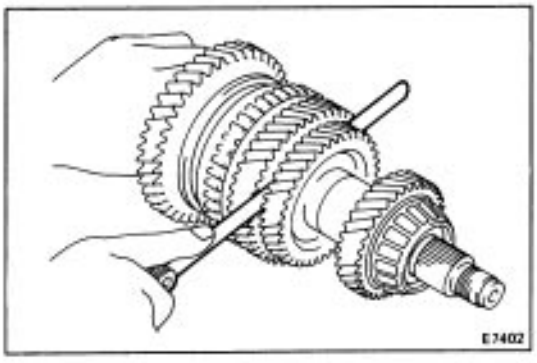

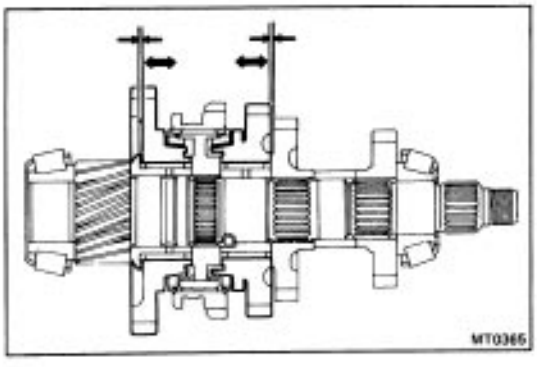

DISASSEMBLY OF OUTPUT SHAFT ASSEMBLY

1. MEASURE FIRST AND SECOND GEAR THRUST CLEARANCE

Using a feeler gauge, measure the thrust clearance.

Standard clearance:

1st gear	**0.10 – 0.35 mm (0.0039 – 0.0138 in.)**
2nd gear	**0.10 – 0.35 mm (0.0039 – 0.0138 in.)**

Maximum clearance:

1st gear	**0.40 mm (0.0157 in:)**
2nd gear	**0.50 mm (0.0197 in.)**

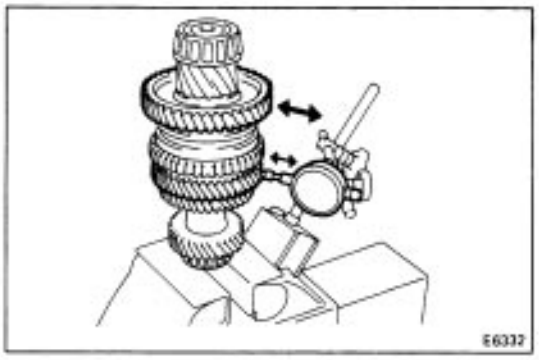

2. CHECK OIL CLEARANCE OF FIRST AND SECOND GEAR

Using dial indicator, measure the oil clearance between the gear and shaft.

Standard clearance:

1st gear 0.009 – 0.051 mm
(0.0004 – 0.0020 in.)
2nd gear 0.009 – 0.051 mm
(0.0004 – 0.0020 in.)

Maximum clearance: 0.080 mm (0.003 in.)

If the clearance exceeds the limit, replace the gear, needle roller bearing or shaft.

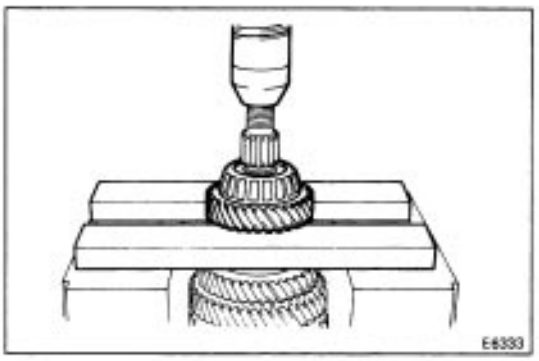

3. REMOVE OUTPUT SHAFT REAR BEARING, FOURTH DRIVEN GEAR AND SPACER

(a) Using a press, remove the bearing and 4th driven gear.

(b) Remove the spacer.

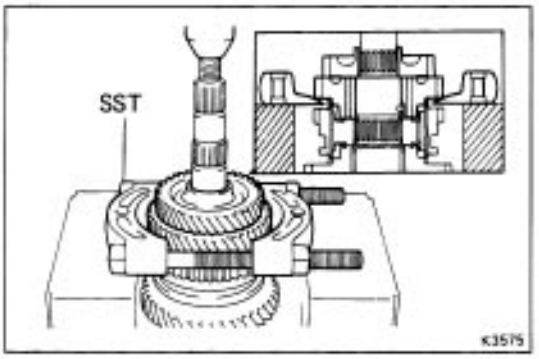

4. REMOVE THIRD DRIVEN GEAR AND SECOND GEAR

Using SST and a press, remove the 3rd driven gear and 2nd gear.

SST 09950–00020

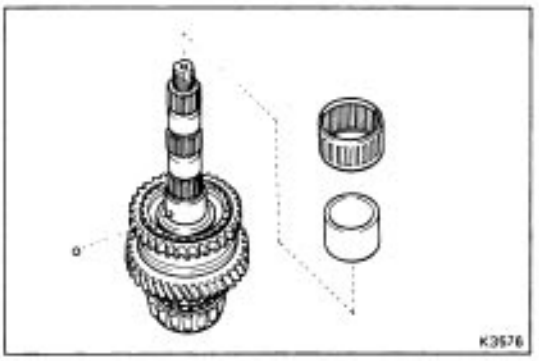

5. REMOVE NEEDLE ROLLER BEARING, SECOND GEAR BUSHING AND BALL

6. REMOVE SYNCHRONIZER RING

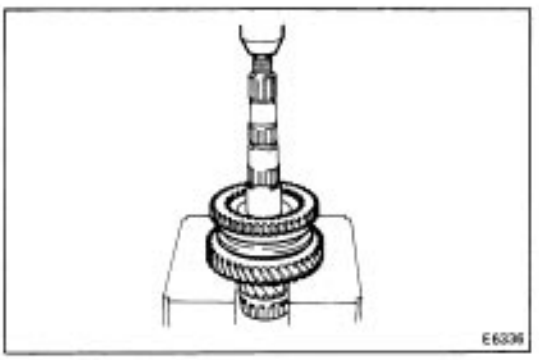

7. REMOVE NO. 1 HUB SLEEVE ASSEMBLY AND FIRST GEAR

Using a press, remove No. 1 hub sleeve and 1st gear.

8. REMOVE SYNCHRONIZER RING AND NEEDLE ROLLER BEARING

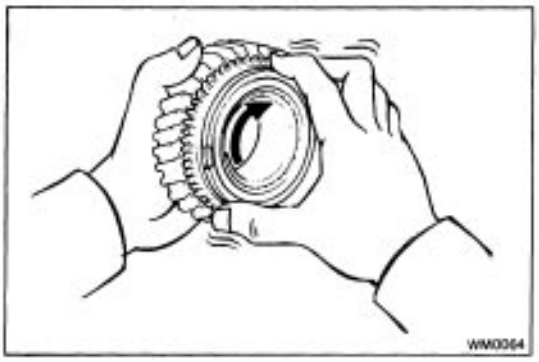

INSPECTION OF OUTPUT SHAFT COMPONENT PARTS

1. INSPECT SYNCHRONIZER RINGS

(a) Check for wear or damage.

(b) Turn the ring and push it in to check the braking action.

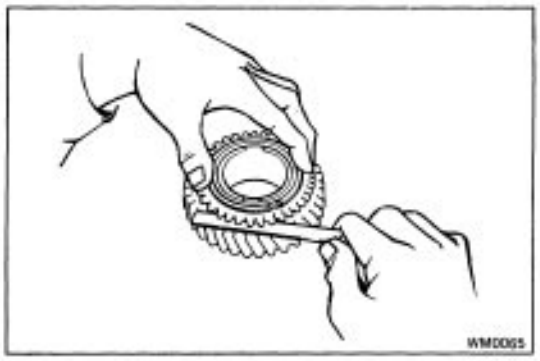

(c) Measure the clearance between the synchronizer ring back and gear spline end.

Minimum clearance: 0.6 mm (0.024 in.)

If the clearance is less than the limit, replace the synchronizer ring.

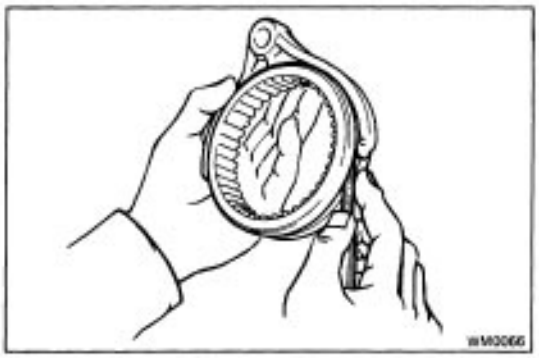

2. MEASURE CLEARANCE OF NO. 1 SHIFT FORK AND HUB SLEEVE

Using a feeler gauge, measure the clearance between the hub sleeve and shift fork.

Maximum clearance: 1.0 mm (0.039 in.)

If the clearance exceeds the limit, replace the shift fork or hub sleeve.

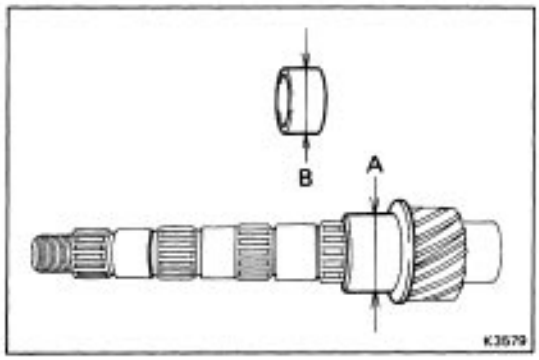

3. INSPECT OUTPUT SHAFT

(a) Check the output shaft for wear or damage.

(b) Using a micrometer, measure the outer diameter of the second gear bushing and output shaft journal surface.

Minimum outer diameter:

Part A 44.950 (1.7697 in.)

Part B 43.950 (1.7303 in.)

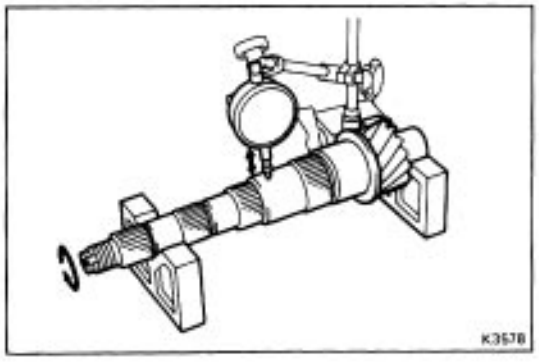

(c) Using a dial indicator, check the shaft runout.

Maximum runout: 0.060 mm (0.0024 in.)

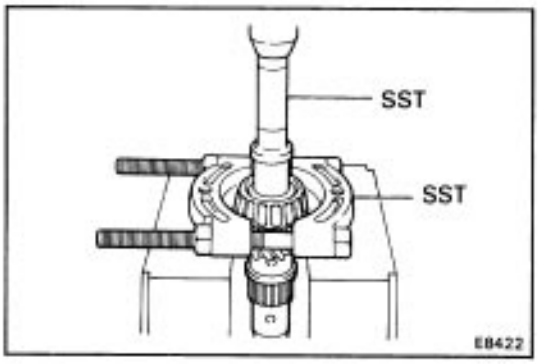

4. IF NECESSARY, REPLACE OUTPUT SHIFT FRONT BEARING

(a) Using SST and press, remove the bearing.
SST 09307–12010, 09950–00020

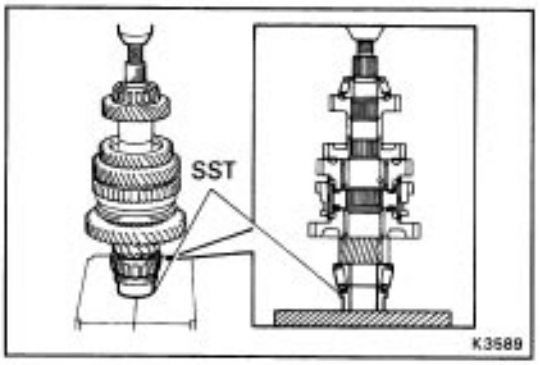

(b) Using SST and a press, install a new bearing.
SST 09316–60010 (09316–00070)

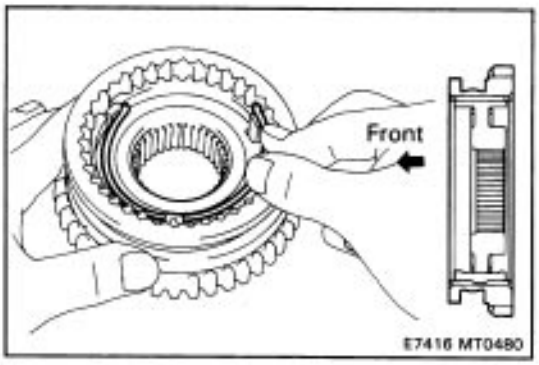

ASSEMBLY OF OUTPUT SHAFT ASSEMBLY

(See page MT–63)

HINT: Coat all the sliding and rotating surface with gear oil before assembly.

1. INSERT NO.1 CLUTCH HUB INTO HUB SLEEVE

(a) Install the clutch hub and shifting keys to the hub sleeve.
(b) Install the shifting key springs under the shifting keys.

NOTICE: Install the key springs positioned so that their end gaps are not in line.

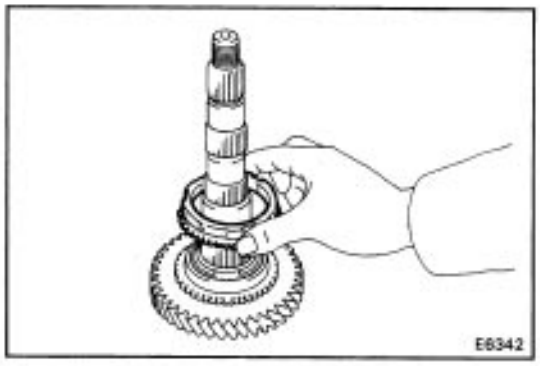

2. INSTALL NEEDLE ROLLER BEARINGS, FIRST GEAR, SYNCHRONIZER RING AND NO. 1 HUB SLEEVE TO OUTPUT SHAFT

(a) Apply MP grease to the needle roller bearings.
(b) Install the 1st gear.
(e) Place the synchronizer ring on the gear and align the ring slots with the shifting keys.

NOTICE: Do not install the synchronizer ring for 2nd gear.

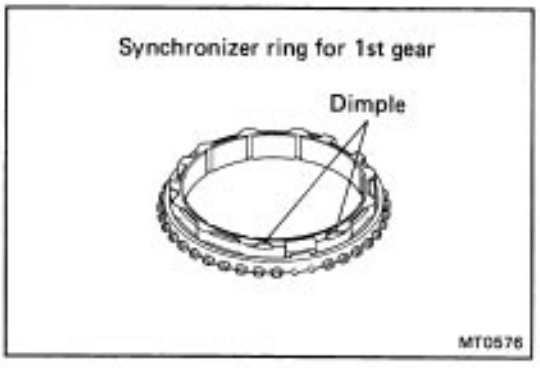

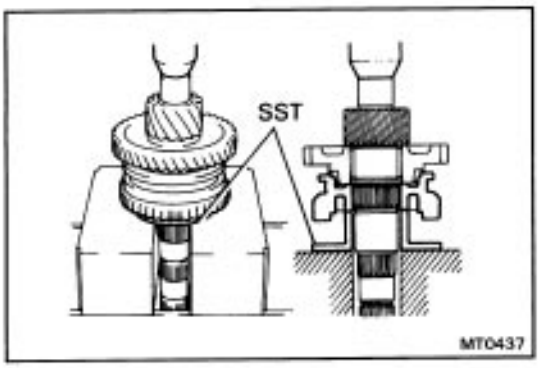

(d) Using SST and a press, install the 1st gear and No. 1 hub sleeve.
SST 09316–60010 (09316–00040)

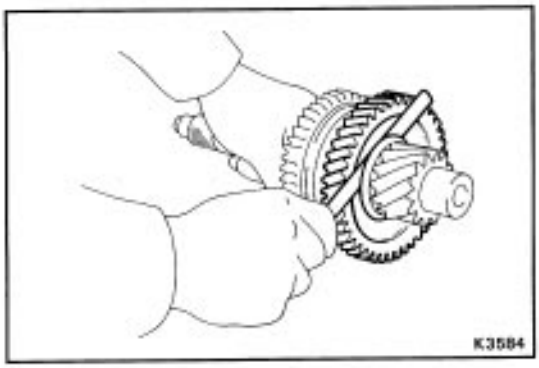

3. MEASURE FIRST GEAR THRUST CLEARANCE

Using a feeler gauge, measure the 1st gear thrust clearance.

Standard clearance: 0.10 – 0.35 mm
(0.0039 – 0.0138 in.)

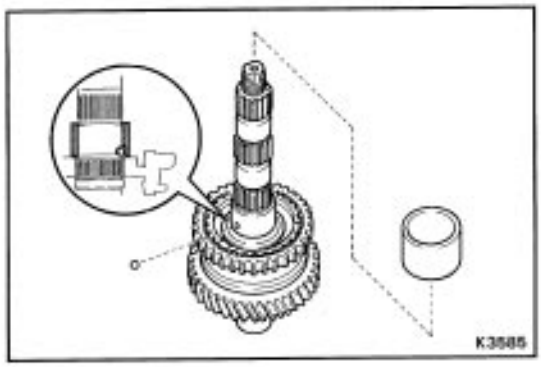

4. INSTALL BALL, SECOND GEAR BUSHING, NEEDLE ROLLER BEARING

(a) Install the ball and bushing.
(b) Apply MP grease to the needle roller bearing.
(c) Install the needle roller bearing.

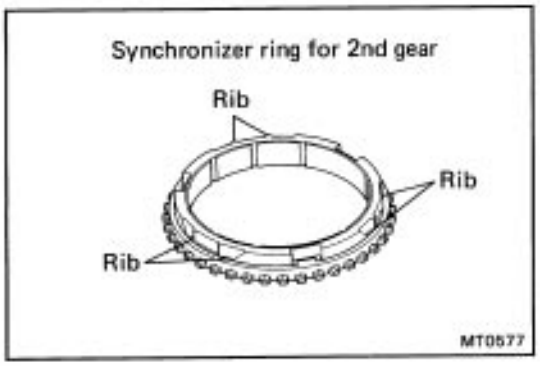

5. INSTALL SYNCHRONIZER RING, SECOND GEAR AND THIRD DRIVEN GEAR

(a) Place the synchronizer ring on the gear and align the ring slots with the shifting keys.

NOTICE: Do not install the synchronizer ring for 1st gear.

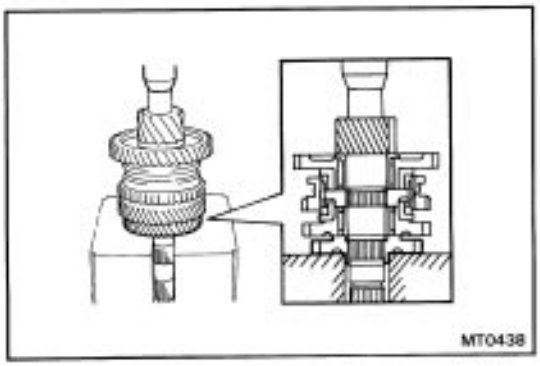

(b) Install the 2nd gear.
(c) Using a press, install the 3rd driven gear.

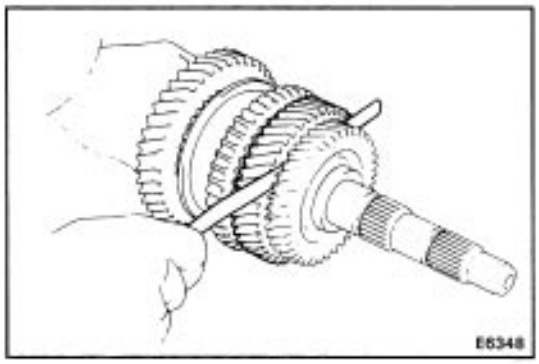

6. MEASURE SECOND GEAR THRUST CLEARANCE

Using a feeler gauge, measure the 2nd gear thrust clearance.

Standard clearance: 0.10 – 0.35 mm
(0.0039 – 0.0138 in.)

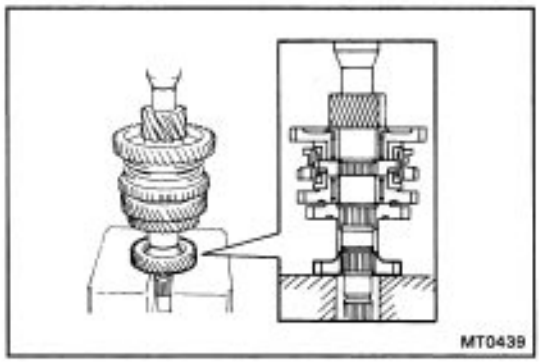

7. INSTALL SPACER AND FOURTH DRIVEN GEAR

(a) Install the spacer.

(b) Using a press, install the 4th driven gear.

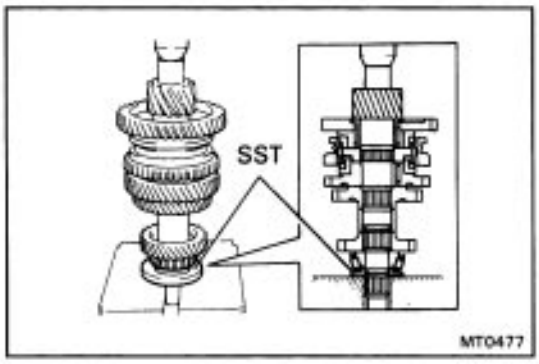

8. INSTALL OUTPUT SHAFT REAR BEARING

Using SST and a press, install the output shaft rear taper roller bearing.

SST 09506–30012

Oil Pump

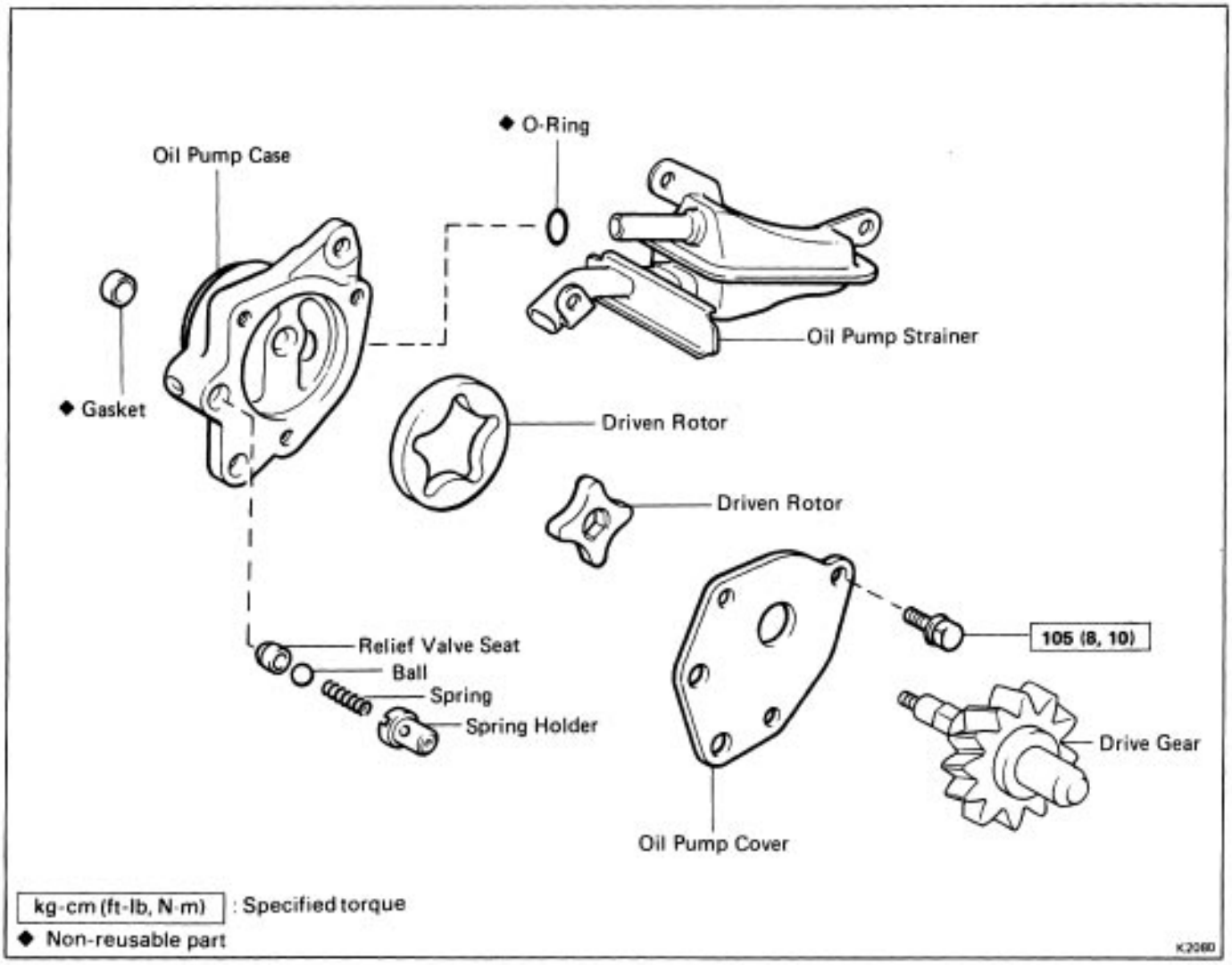

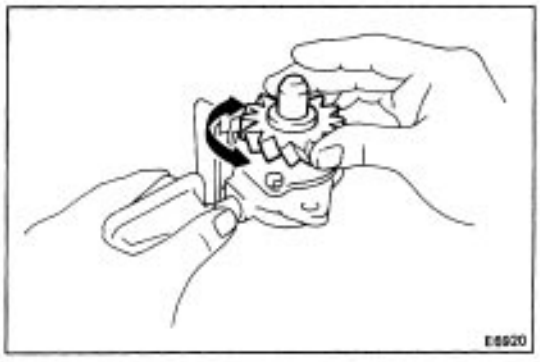

DISASSEMBLY OF OIL PUMP

1. CHECK OPERATION OF OIL PUMP

Install the oil pump drive gear to the drive rotor, check that the drive rotor turns smoothly.

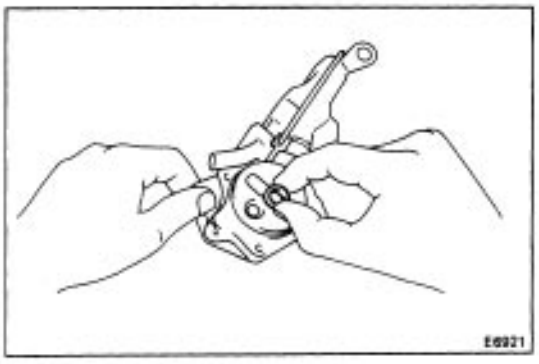

2. REMOVE GASKET FROM OIL PUMP CASE

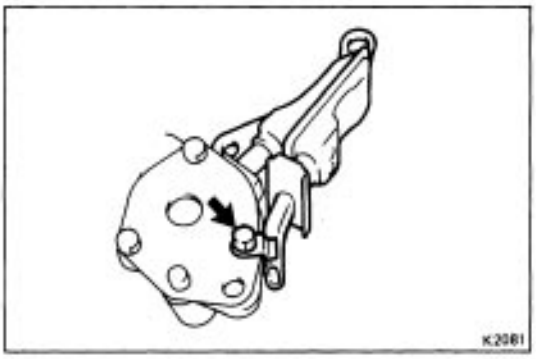

3. REMOVE BOLT AND OIL STRAINER

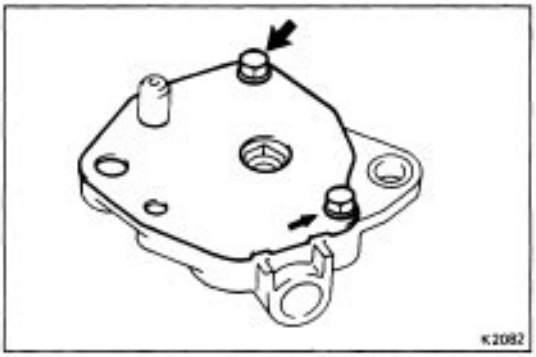

4. REMOVE OIL PUMP COVER

(a) Hold the oil pump cover, remove the two bolts and the cover.

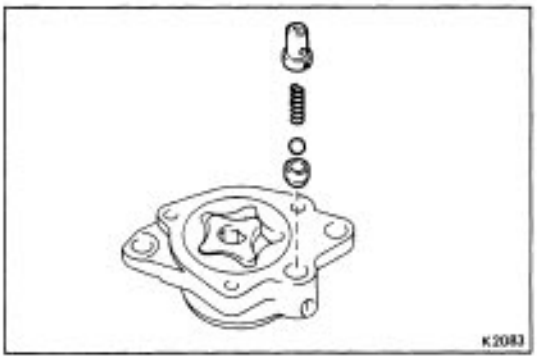

(b) Remove the spring holder, spring, ball and relief valve seal.

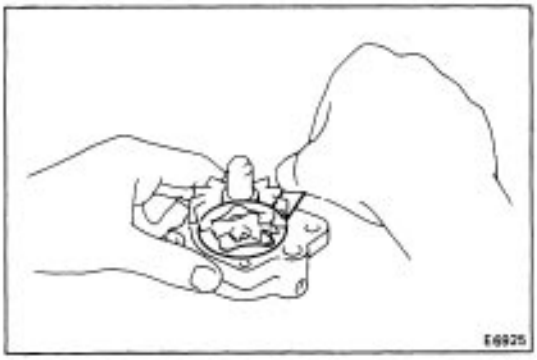

5. CHECK ROTOR BODY CLEARANCE

(a) Install the oil pump drive gear to the drive rotor.

(b) Using a feeler gauge, measure the body clearance between the drive rotor and oil pump case.

Standard clearance: 0.10 – 0.16 mm (0.0039 – 0.0063 in.)

Maximum clearance: 0.30 mm (0.0118 in.)

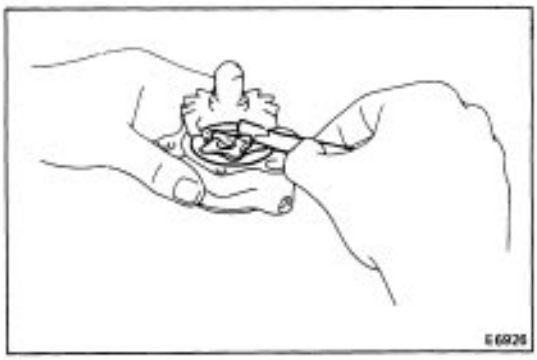

6. CHECK ROTOR TIP CLEARANCE

(a) Install the oil pump drive gear to the drive rotor.

(b) Using a feeler gauge, measure the tip clearance between the drive and driven rotors.

Standard clearance: 0.08 – 0.15 mm (0.0031 – 0.0059 in.)

Maximum clearance: 0.30 mm (0.0118 in.)

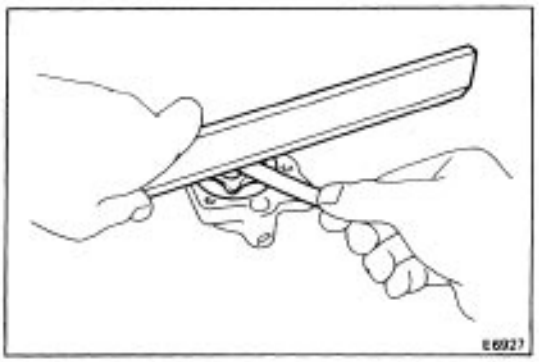

7. CHECK SIDE CLEARANCE

Using a precision straight edge and feeler gauge, measure the side clearance of both rotors.

Standard clearance: 0.03 – 0.08 mm (0.0012 – 0.0031 in.)

Maximum clearance: 0.15 mm (0.0059 in.)

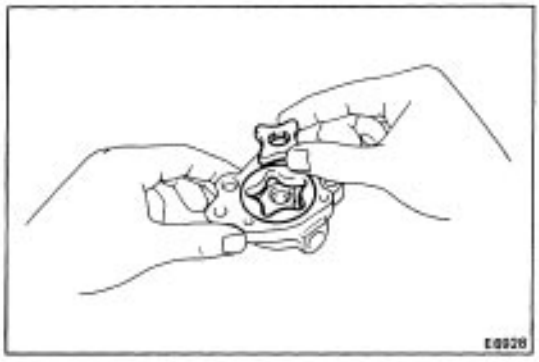

8. REMOVE OIL PUMP DRIVE ROTOR AND DRIVEN ROTOR

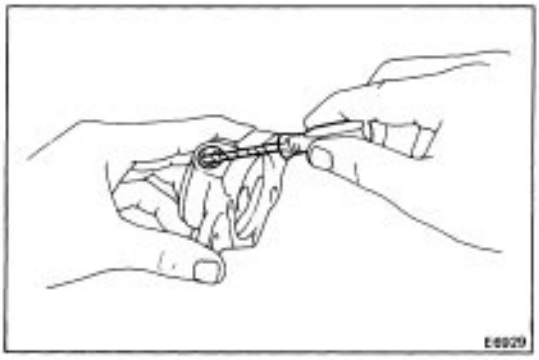

9. IF NECESSARY, REPLACE O–RING

(a) Using a screwdriver, remove the O–ring.

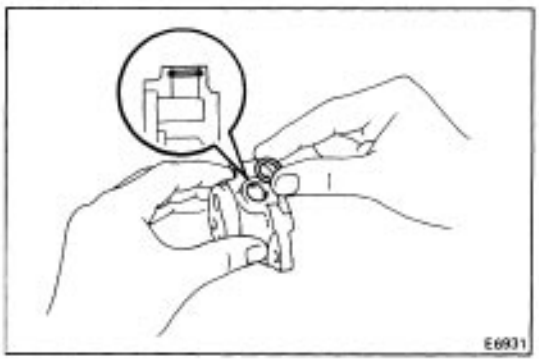

(b) Apply the gear oil to a new 0–ring.

(c) Install a new O–ring.

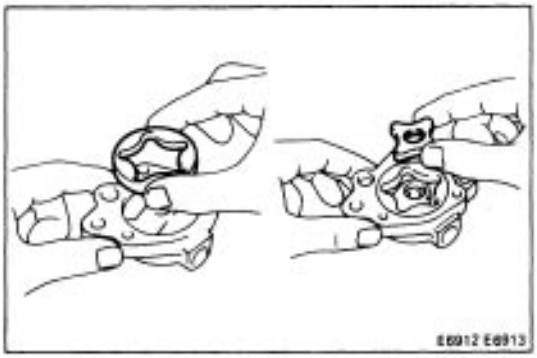

ASSEMBLY OF OIL PUMP

1. INSTALL DRIVEN ROTOR AND DRIVE ROTOR

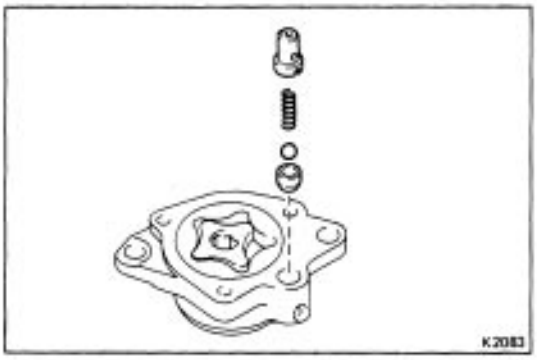

2. INSTALL OIL PUMP COVER

(a) Install the relief valve seat, ball, spring and spring holder to the oil pump case.

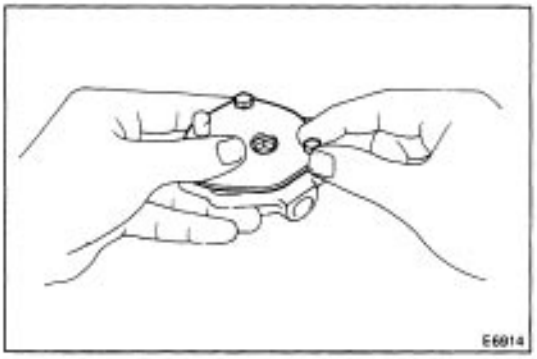

(b) Hold the oil pump cover, temporarily install the two bolts.

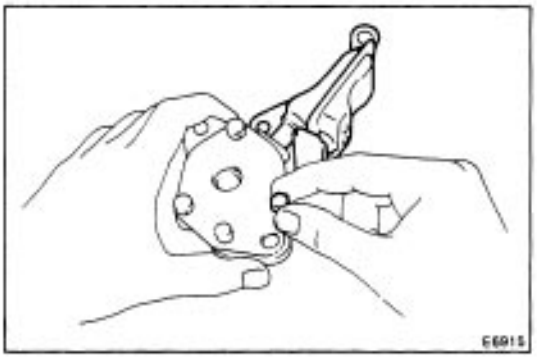

3. INSTALL OIL STRAINER

Install the oil strainer to the oil pump case, temporarily install the bolt.

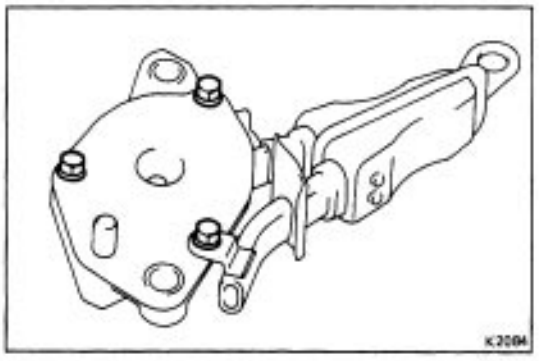

4. TORQUE OIL PUMP COVER BOLTS

Torque the three bolts evenly.

Torque: 105 kg–cm (8 ft–lb, 10 N–m)

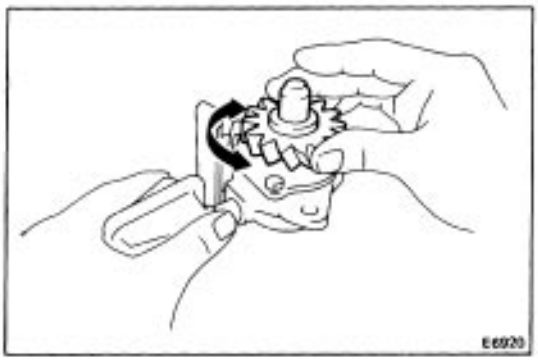

5. CHECK OPERATION OF OIL PUMP

Insert the oil pump drive gear to the drive rotor, check that the drive rotor turns smoothly.

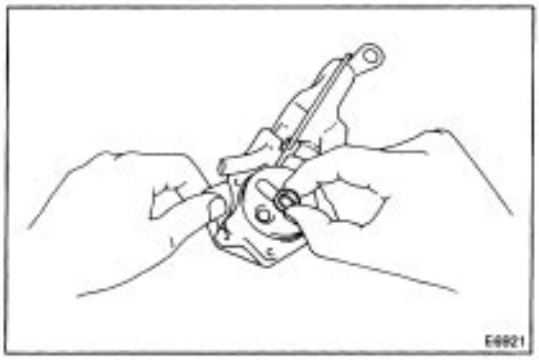

6. INSTALL GASKET

Install a new gasket to the oil pump case.

Shift and Select Lever Shaft

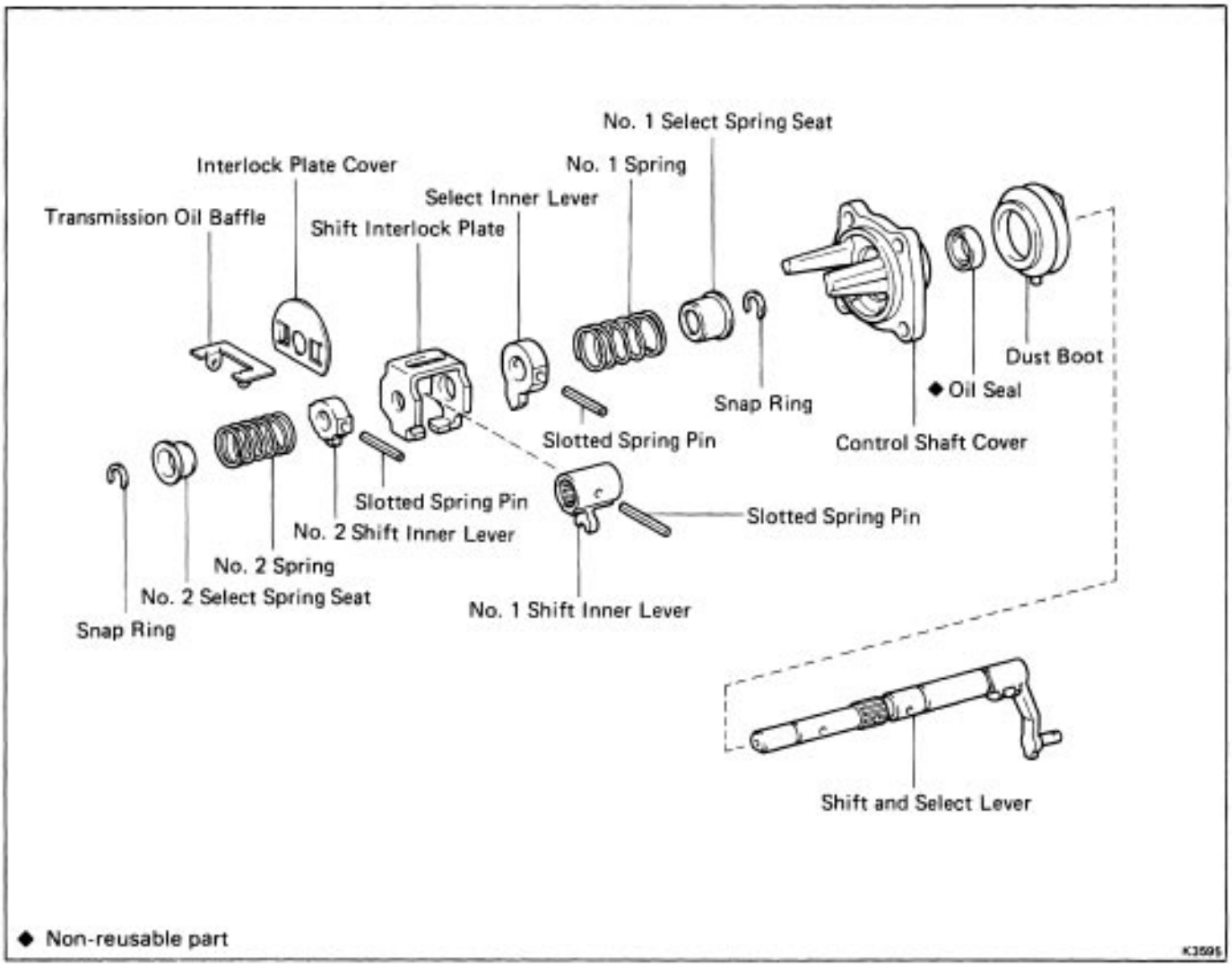

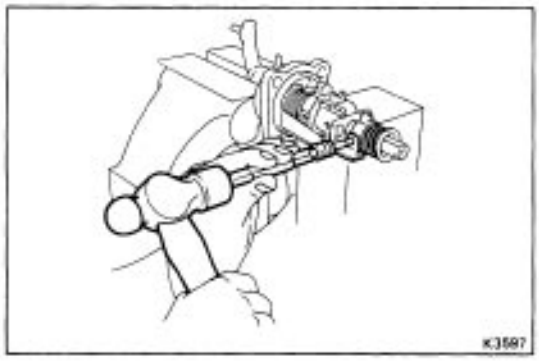

DISASSEMBLY OF SHIFT AND SELECT LEVER SHAFT ASSEMBLY

1. REMOVE NO. 2 SHIFT INNER LEVER

(a) Using a pin punch and a hammer, drive out the slotted spring pin and remove the transmission oil baffle.

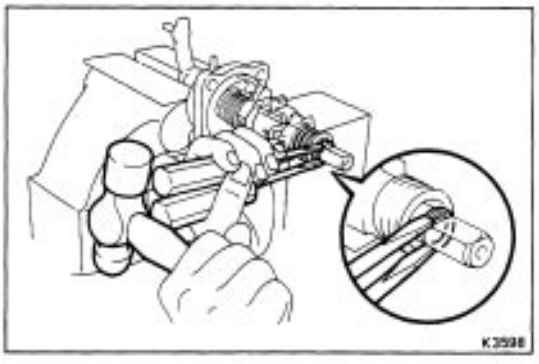

(b) Using two screwdrivers and a hammer, remove the snap ring.

(c) Remove No. 2 select spring seat, No. 2 compression spring and No. 2 shift inner lever.

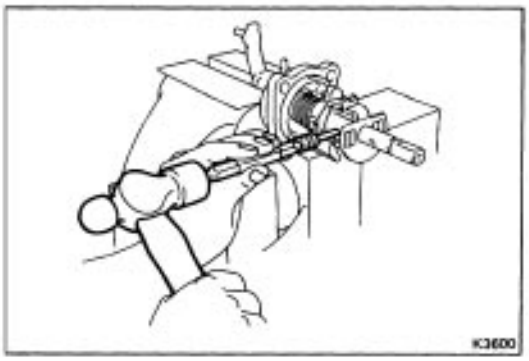

2. REMOVE SHIFT INTERLOCK PLATE AND NO. 1 SHIFT INNER LEVER

(a) Using a pin punch and hammer, drive out the slotted spring pin.

(b) Remove the shift inner plate and No. 1 shift inner lever from the shaft.

(c) Remove the shift interlock plate cover and No. 1 shift inner lever from the shift interlock plate.

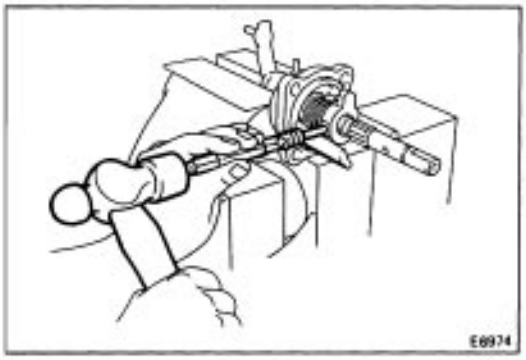

3. REMOVE SELECT INNER LEVER

(a) Using a pin punch and hammer, drive out the slotted spring pin.

(b) Remove the select inner lever, No. 1 compression spring and No. 1 select spring seat.

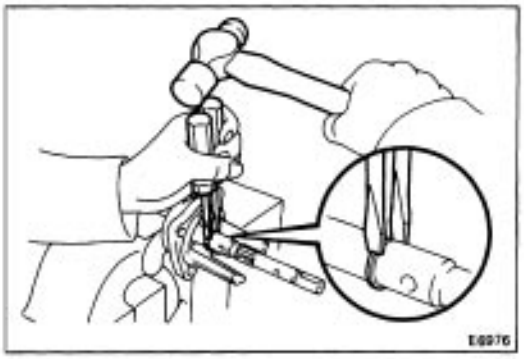

4. REMOVE SNAP RING

Using two screwdrivers and a hammer, remove the snap ring.

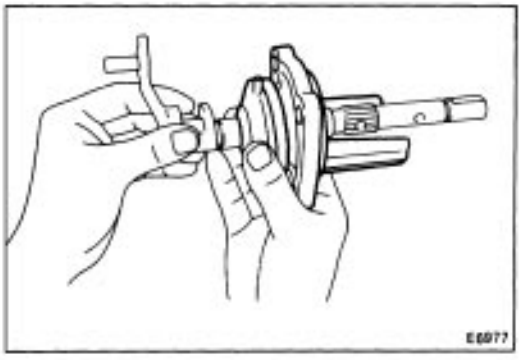

5. REMOVE CONTROL SHAFT COVER AND DUST BOOT

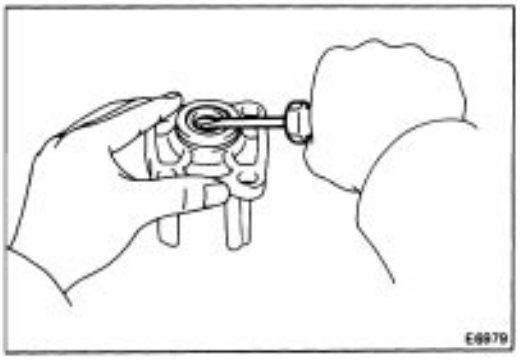

6. IF NECESSARY, REPLACE CONTROL SHAFT COVER OIL SEAL

(a) Using a screwdriver, remove oil seal.

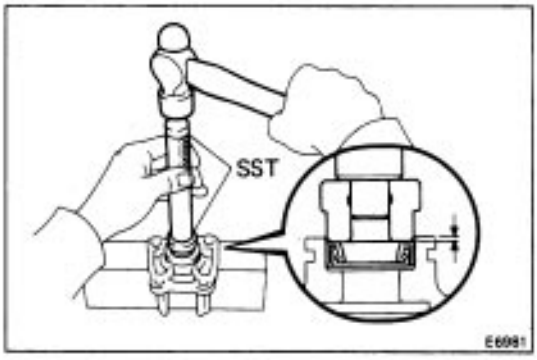

(b) Using SST and a hammer, drive in the new oil seal.
SST 09620–30010 (09631–00020, 09627–30010)
Oil seal depth: 0 – 1.0 mm (0 – 0.039 in.)
(c) Apply MP grease to the oil seal.

ASSEMBLY OF SHIFT AND SELECT LEVER SHAFT ASSEMBLY

1. APPLY SHAFT WITH MP GREASE, AS SHOWN

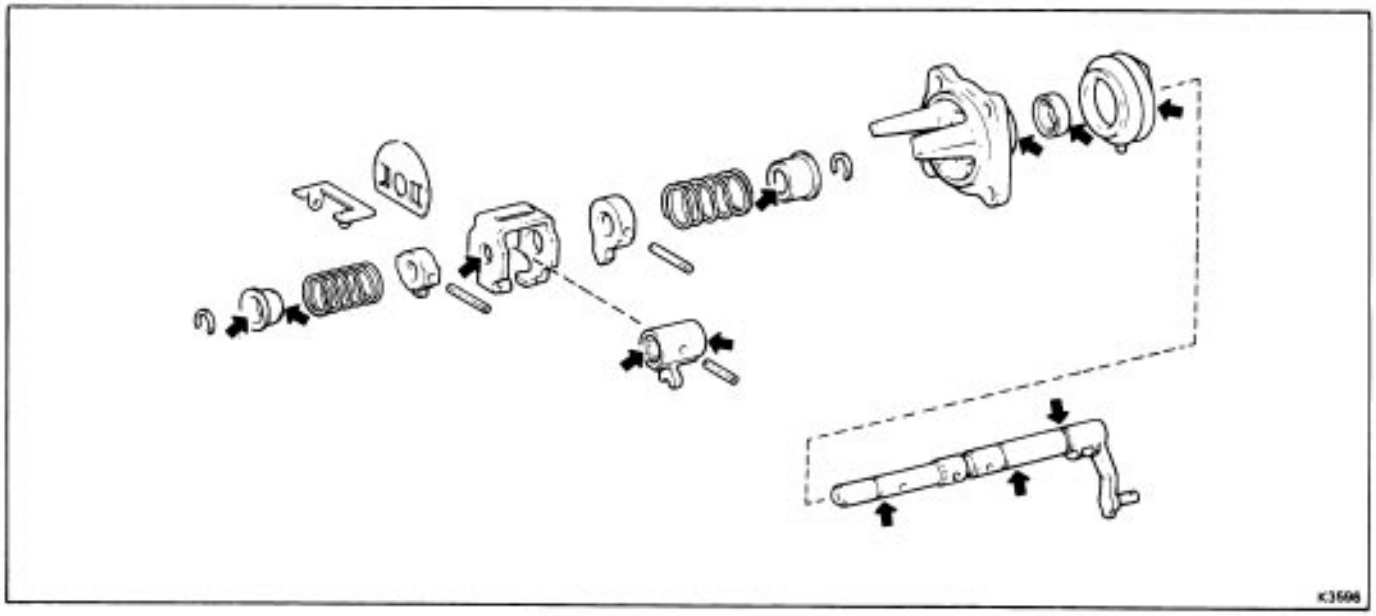

2. INSTALL SHIFT AND SELECT LEVER SHAFT

(a) Install the boot to the control shaft cover, as shown.

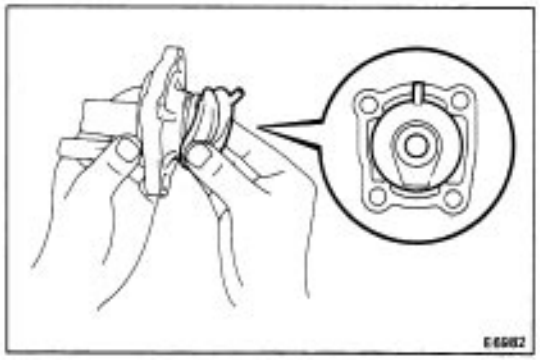

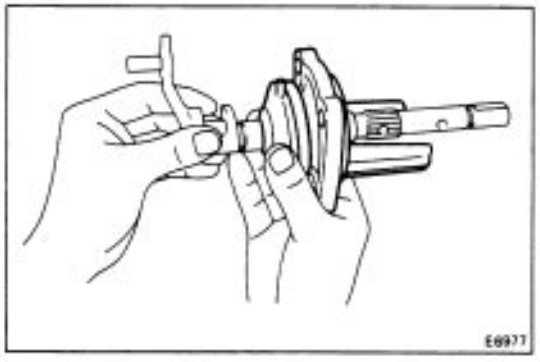

(b) Install the shift and select lever shaft to the control shaft cover.

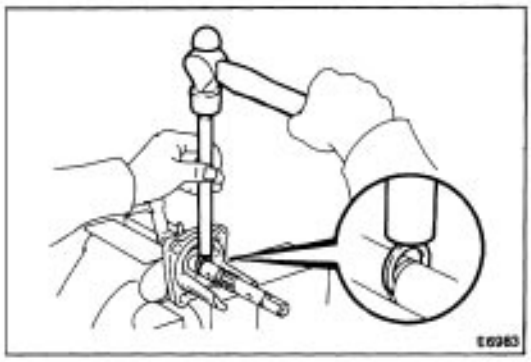

3. INSTALL SNAP RING

Using a brass bar and hammer, install the snap ring and spring seat.

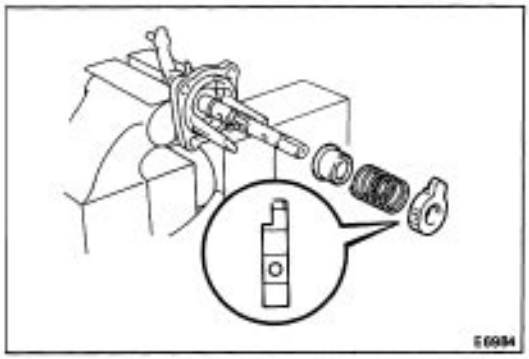

4. INSTALL SELECT INNER LEVER

(a) Install the No. 1 spring seat, No. 1 select spring and select inner lever, as shown.

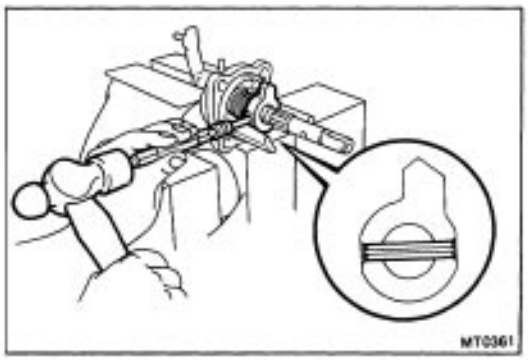

(b) Using a pin punch and hammer, drive in the slotted spring pin.

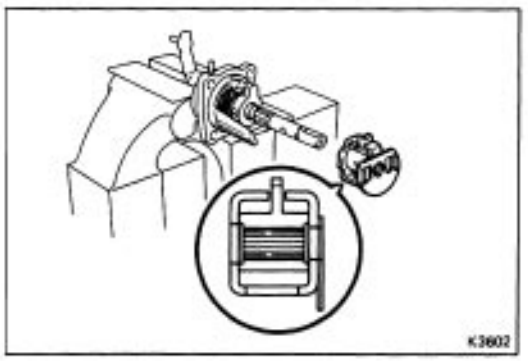

5. INSTALL SHIFT INTERLOCK PLATE AND NO. 1 SHIFT INNER LEVER

(a) Place the No. 1 shift inner lever into the interlock plate.

(b) Install the shift interlock plate cover to the interlock plate.

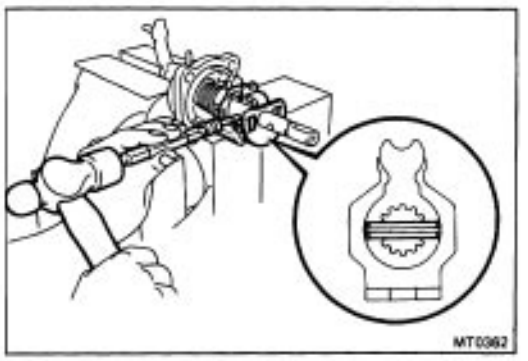

(c) Using a pin punch and hammer, drive in the slotted spring pin.

(d) Check that the shift interlock plate turns smoothly.

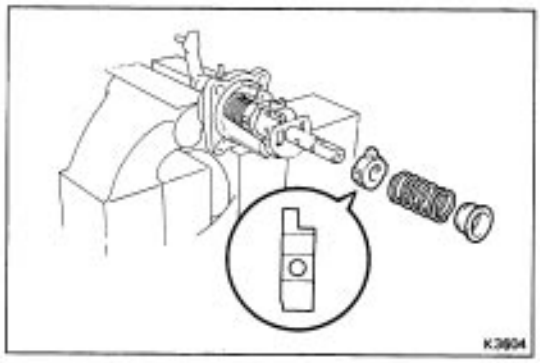

6. INSTALL NO. 2 SHIFT INNER LEVER

(a) Install the No. 2 shift inner lever, No. 2 compression spring, transmission oil baffle and No. 2 select spring seat, as shown.

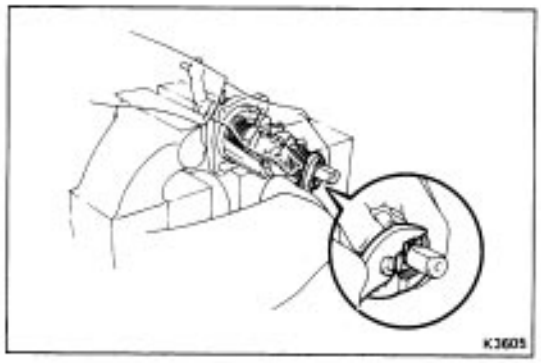

(b) Install the snap ring.

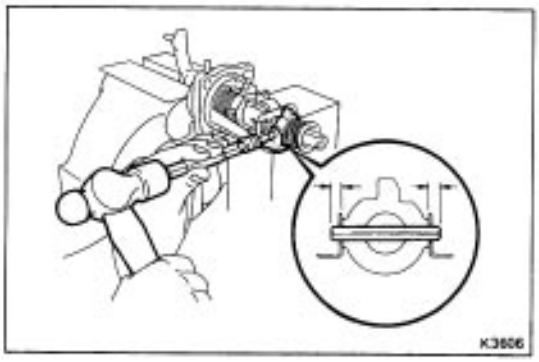

(c) Using a pin punch and hammer, drive in the slotted spring pin.

Differential Case Assembly

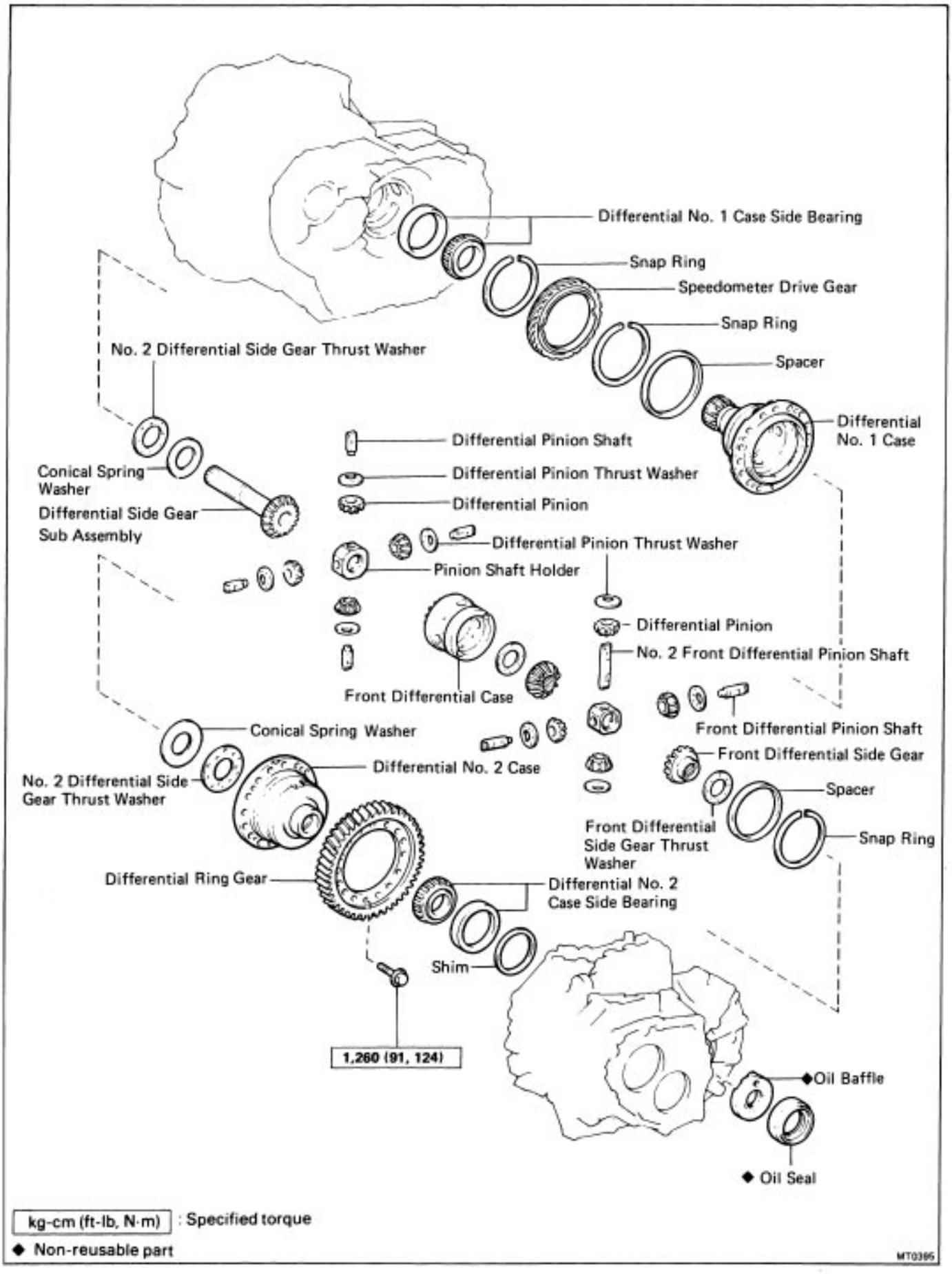

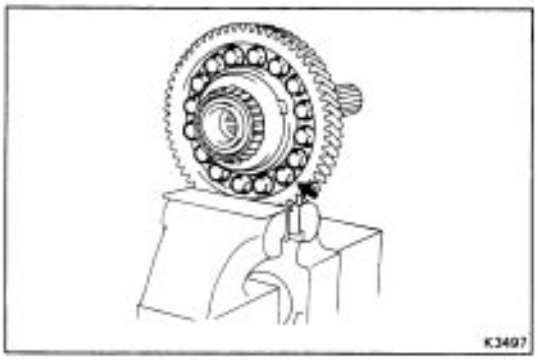

DISASSEMBLY OF DIFFERENTIAL CASE

1. REMOVE DIFFERENTIAL CASE

(a) Remove the sixteen bolts.

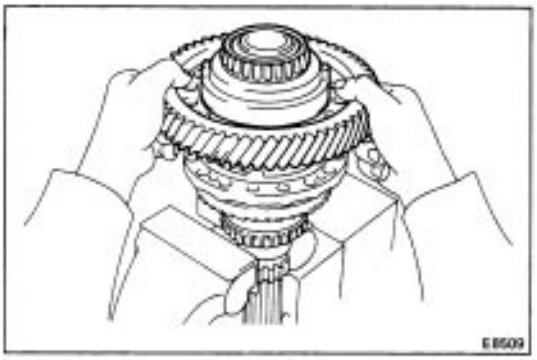

(b) Remove the differential No. 2 case upward.

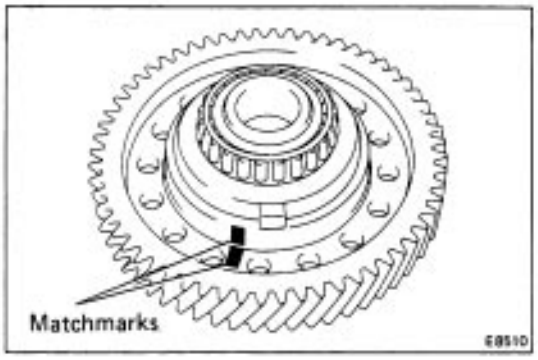

2. REMOVE RING GEAR

(a) Place the matchmarks on both the differential No. 2 case and ring gear.

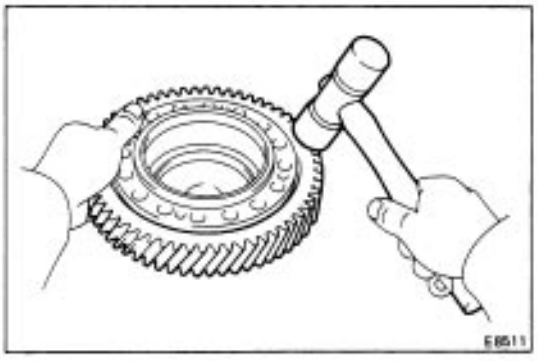

(b) Using a plastic hammer, tap out the ring gear.

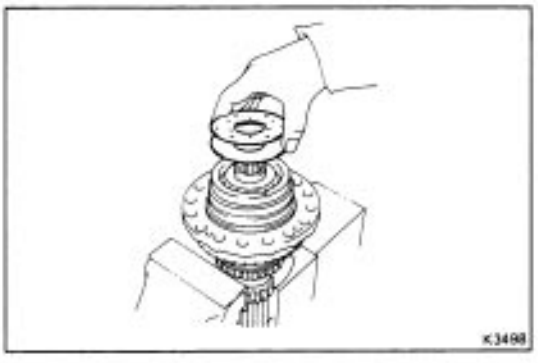

3. REMOVE NO. 2 DIFFERENTIAL SIDE GEAR THRUST WASHER AND CONICAL SPRING WASHER

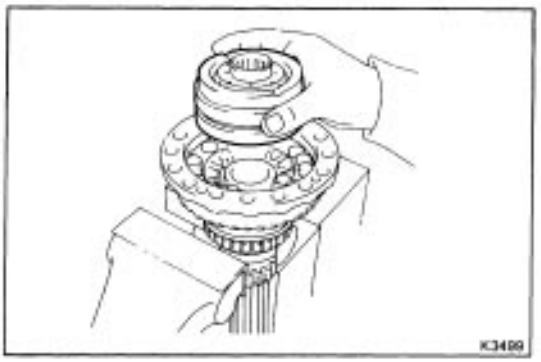

4. REMOVE FRONT DIFFERENTIAL CASE ASSEMBLY



5. DISASSEMBLY FRONT DIFFERENTIAL CASE ASSEMBLY

(a) Remove the front differential side gear together with thrust washer.

(b) Remove the front differential side gear thrust washer from the side gear.

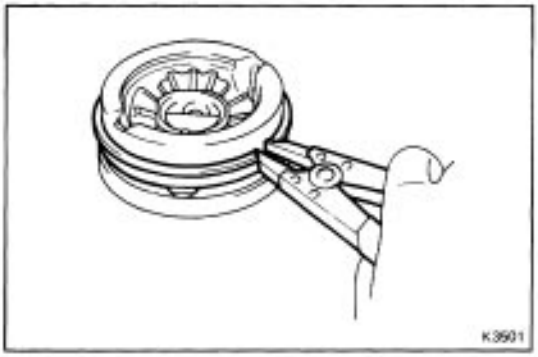

(c) Using snap ring pliers, remove the snap ring.

HINT: Before removing the shaft snap ring, wrap vinyl tape around the case to prevent it from damage.

(d) Remove the spacer.



(e) Remove the No. 2 pinion shaft, two pinion shafts, pinion holder, four differential pinions, four thrust washers, front differential side gear and thrust washer from the front differential case.

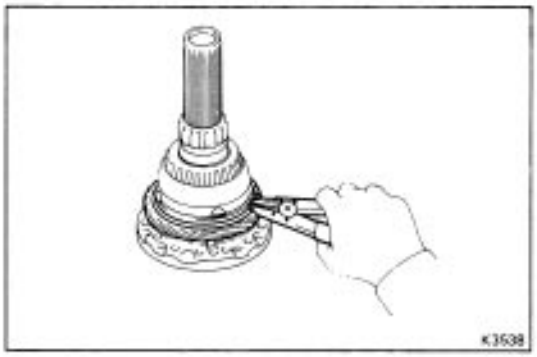

6. REMOVE SPEEDOMETER DRIVE GEAR AND SPACER

(a) Using snap ring pliers, remove the snap ring.
(b) Remove the speedometer drive gear.

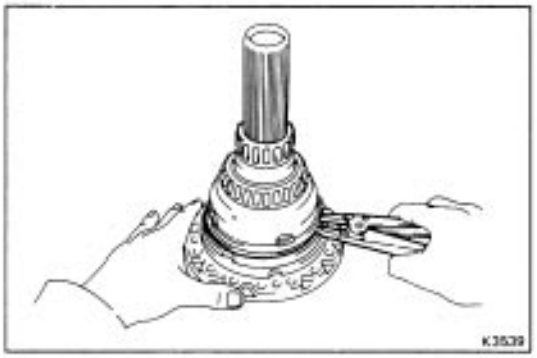

(c) Using snap ring pliers, remove the snap ring.
(d) Pull down the spacer.

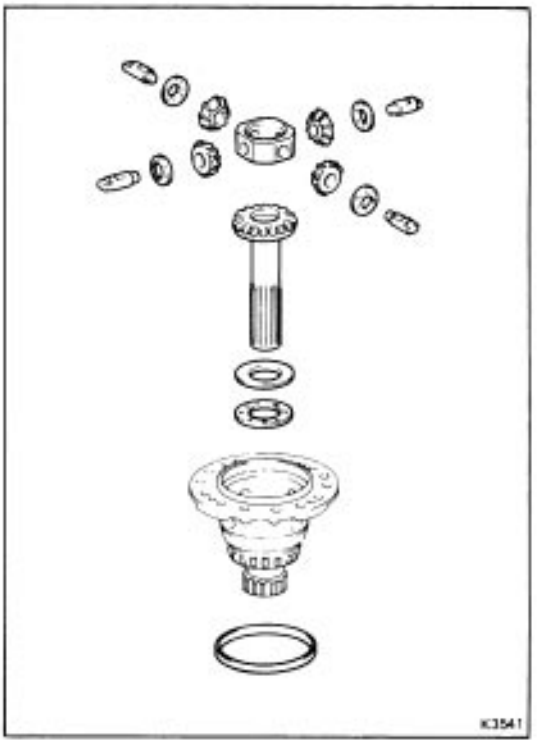

7. DISASSEMBLE DIFFERENTIAL No.1 CASE

Remove the four pinion shafts, pinion holder, four differential pinions, four thrust washers, side gear subassembly, conical spring washer and No. 2 thrust washer, spacer.

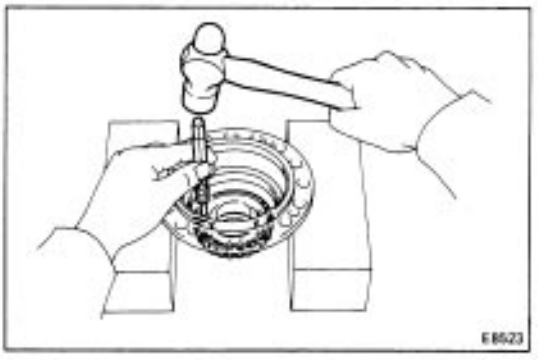

8. REMOVE SIDE BEARING

(a) Using a pin punch and hammer, drive out the side bearing evenly through four holes in the differential No. 1 case.

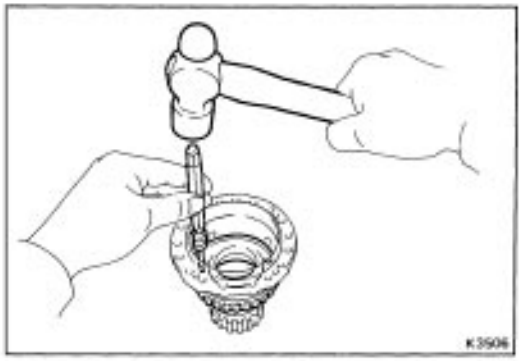

(b) Using a pin punch and hammer, drive out the side bearing evenly through four holes in the differential No. 2 case.

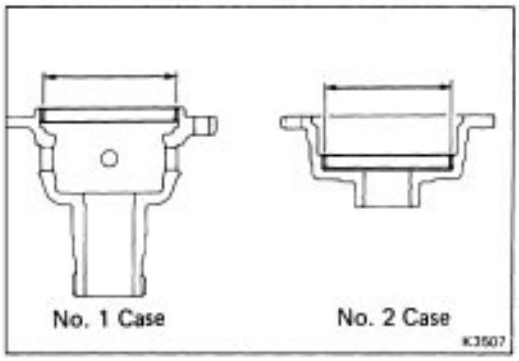

INSPECTION OF DIFFERENTIAL CASE

1. MEASURE DIFFERENTIAL NO. 1 AND NO. 2 CASE

Using a cylinder gauge, measure the inner diameter of the differential No. 1 and No. 2 case.

Standard diameter:

No. 1 case 104.000 – 104.035 mm (4.0945 – 4.0959 in.)

No. 2 case 97.000 – 97.035 mm (3.8189 – 3.8203 in.)

Maximum diameter:

No. 1 case 104.060 mm (4.0968 in.)

No. 2 case 97.060 mm (3.8213 in.)

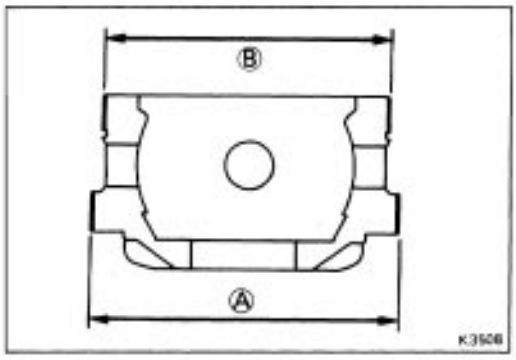

2. MEASURE FRONT DIFFERENTIAL CASE

Using a micrometer, measure the outer diameter of front differential case.

Standard diameter: A 103.929 – 103.964 mm (4.0917 – 4.0931 in.)

B 96.929 – 96.964 mm– (3–8161 – 3.8175 in.)

Minimum diameter: A 103.850 mm (4.0886 in.)

B 96.850 mm (3.8130 in.)

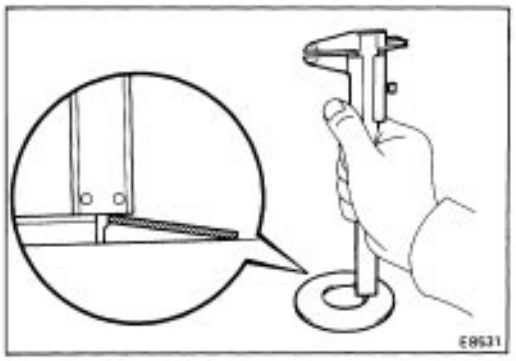

3. MEASURE CONICAL SPRING WASHER

Using a caliper, measure the height of the conical spring washer.

Standard height:

No. 1 case conical spring washer

1.85 – 2.05 mm (0.0728 – 0.0807 in.)

No. 2 case conical spring washer

2.60 – 2.80 mm (0.1024 – 0.1102 in.)

Minimum height:

No. 1 case conical spring washer

1.75 mm (0.0689 in.)

No. 2 case conical spring washer

2.50 mm (0.0984 in.)

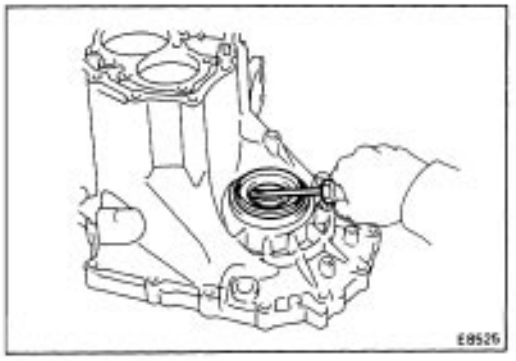

4. (TRANSMISSION CASE SIDE)

IF NECESSARY, REPLACE OIL SEAL AND TAPERED ROLLER BEARING OUTER RACE

(a) Using a screwdriver, remove the oil seal.

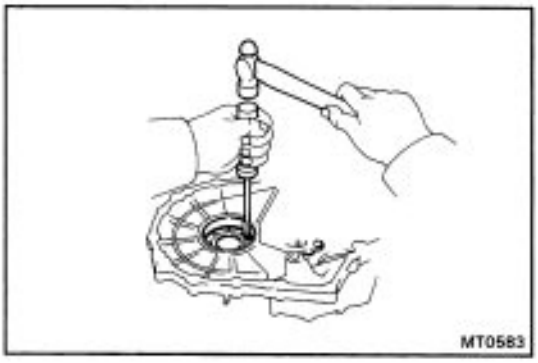

(b) Using a screwdriver and hammer, drive out the transmission oil baffle.

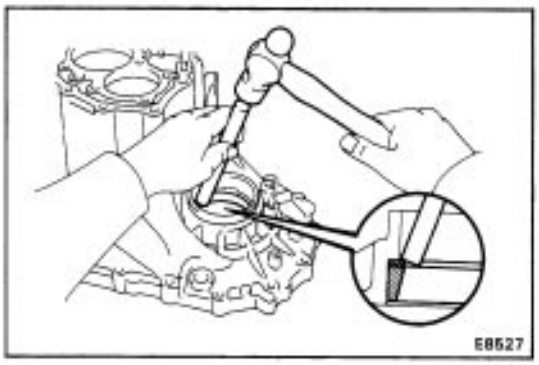

(c) Using a brass bar and hammer, drive out the bearing outer race lightly and evenly.
(d) Remove the adjusting shim.

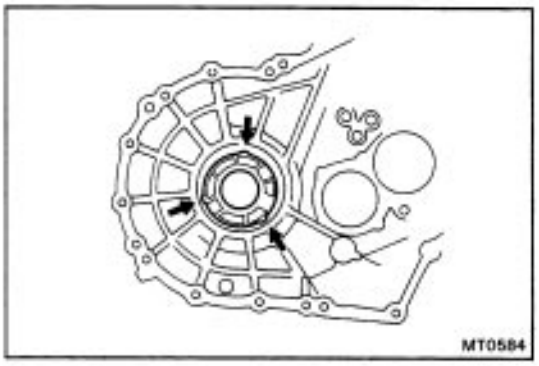

(e) Install the new transmission oil baffle.
HINT:

- Install the transmission oil baffle projection into the case side cutout.
- Do not install the oil baffle when adjusting the differential side bearing preload.

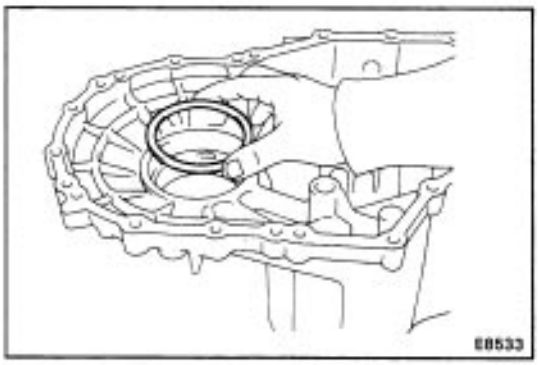

(f) Install the adjusting shim.
(See page MT–98)
HINT: First select and install a shim of lesser thickness than before.

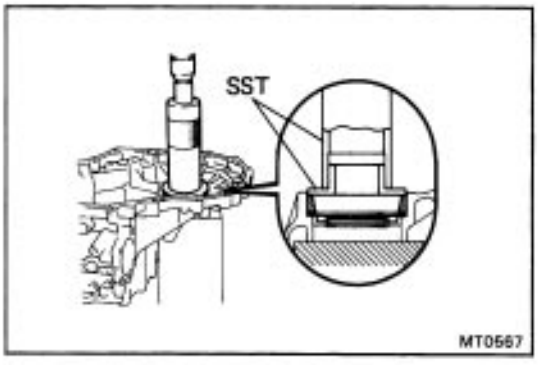

(g) Using SST and a press, install the taper roller bearing outer race.
SST 09316–60010 (09316–00010, 09316–00040)

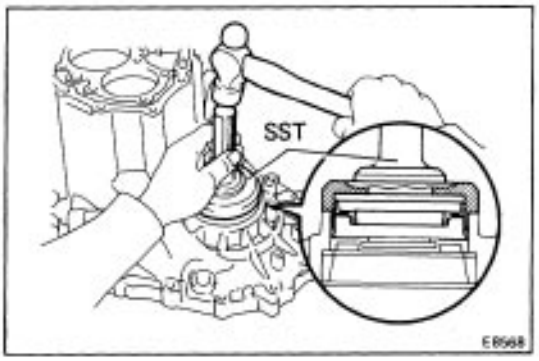

(h) Using SST, drive in a new oil seal.
SST 09223–15010
Drive in depth: –0.5 – 0.5 mm (–0.020 – 0.020 in.)
(i) Coat the lip of the oil seal with MP grease.

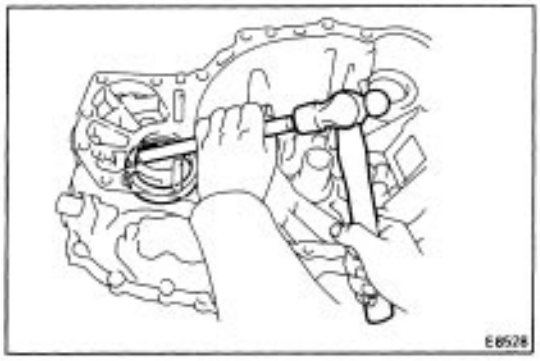

5. (TRANSAXLE CASE SIDE)
I F NECESSARY, REPLACE TAPERED ROLLER BEARING OUTER RACE
(a) Using a brass bar and hammer, drive out the bearing outer race lightly and evenly through the cutout position on the transaxle case.

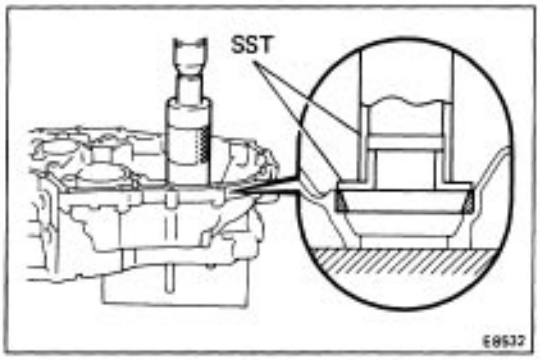

(b) Using SST and a press, install the tapered roller bearing outer race.
SST 09316–60010 (09316–00010, 09316–00040)

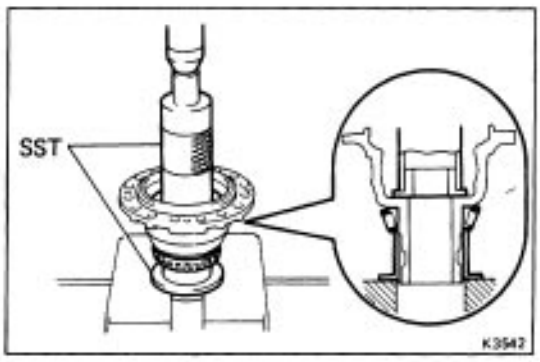

ASSEMBLY OF DIFFERENTIAL CASE

HINT: Coat all of the sliding surface with gear oil before assembly.

1. INSTALL SIDE BEARING
(a) Using SST and a press, install the side bearing to the differential No. 1 case.
SST 09316–60010 (09316–00010, 09316–00020), 09316–20011

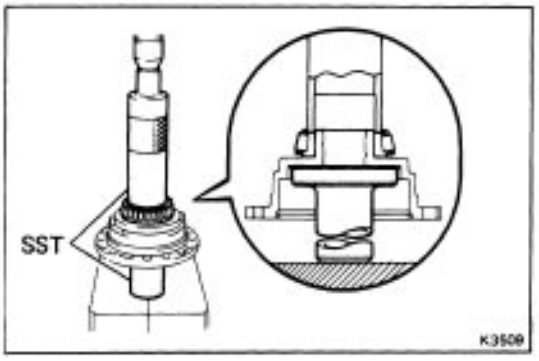

(b) Using SST and a press, install the side bearing to the differential No. 2 case.
SST 09309–36010, 09316–60010 (09316–00010)

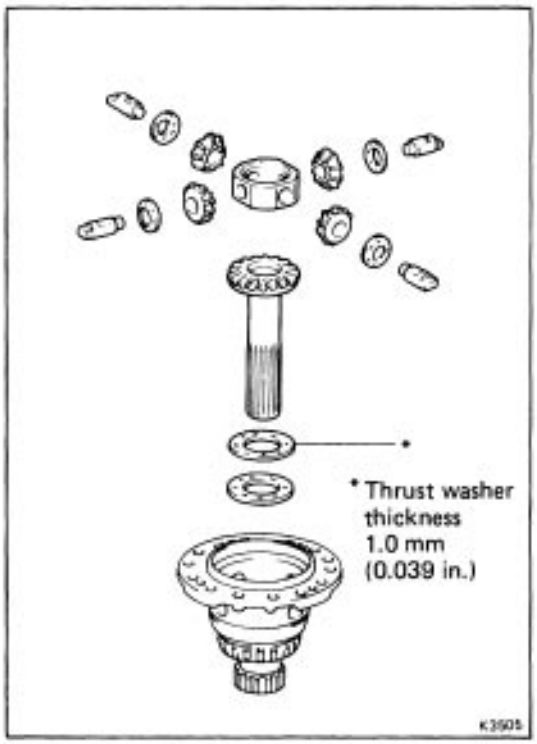

2. CHECK AND ADJUST CENTER DIFFERENTIAL SIDE GEAR BACKLASH

(Differential Side Gear Subassembly)

(a) Install the No. 2 side gear thrust washer, (temporarily install) 1.0 mm (o.039 in.) size thrust washer, differential side gear subassembly, four pinions, four thrust washers, pinion shaft holder and four shafts to the differential No. 1 case.

HINT: Thrust washer 1.0 mm (0.039 in.) size is for check of backlash.

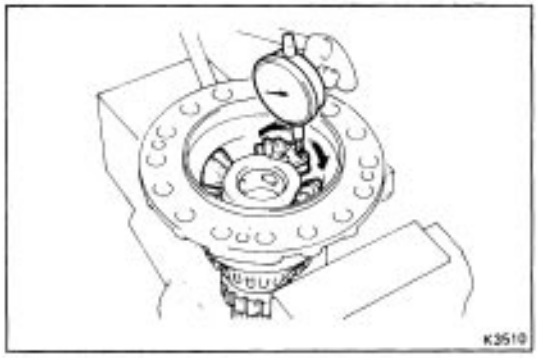

(b) Using a dial indicator, measure the backlash of one pinion gear while holding the differential side gear subassembly toward the case.

Standard clearance: 0.05 – 0.20 mm (0.0020 – 0.0079 in.)

HINT: Referring to the table below, select the No. 2 thrust washer which will ensure that the backlash is within specification. Try to select a washer of the same size.

Thickness	mm (in.)	Thickness	mm (in.)
0.80	(0.0315)	1.15	(0.0453)
0.85	(0.0335)	1.20	(0.0472)
0.90	(0.0354)	1.25	(0.0492)
0.95	(0.0374)	1.30	(0.0512)
1.00	(0.0394)	1.35	(0.0531)
1.05	(0.0413)	1.40	(0.0551)
1.10	(0.0433)		

(c) Remove the differential No. 1 case.

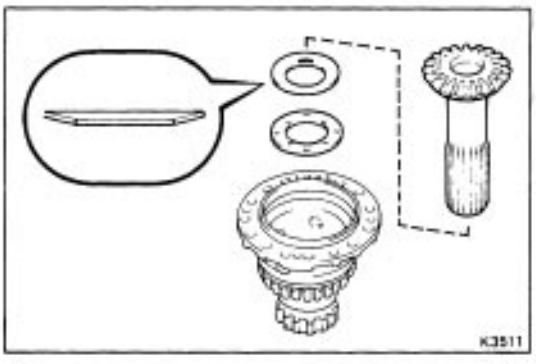

3. ASSEMBLE DIFFERENTIAL NO. 1 CASE

(a) Install the No. 2 side gear thrust washer (previously selected), conical spring washer and differential side gear subassembly to the No. 1 case.

HINT: Be careful not to mistake the direction of conical spring washer.

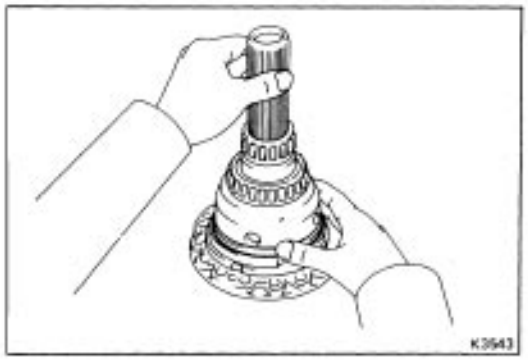

(b) Install spacer to the differential No. 1 case.

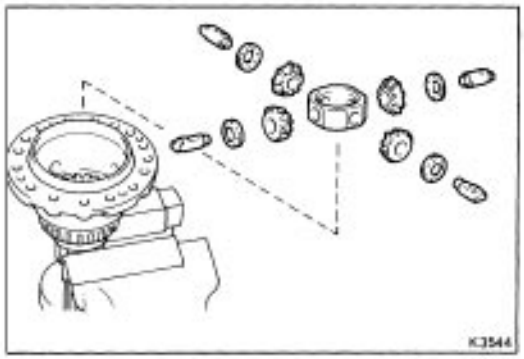

(c) Install the four pinion thrust washers, four differential pinions, shaft holder and four shafts to the No. 1 case.

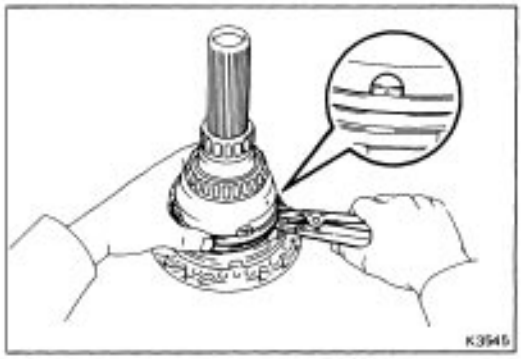

4. INSTALL SPEEDOMETER DRIVE GEAR

(a) Install spacer to the differential No. 1 case.
(b) Using snap ring pliers, install snap ring.

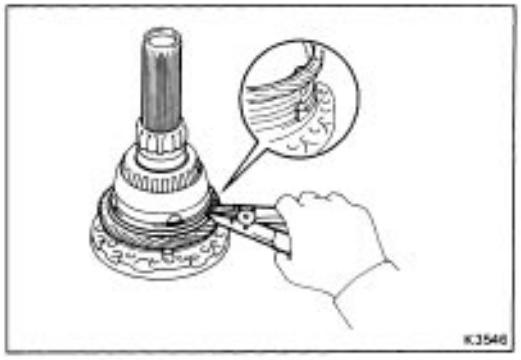

(c) Align the projection on the differential No. 1 case and speedometer drive gear.
(d) Using snap ring pliers, install snap ring.



5. CHECK AND ADJUST FRONT DIFFERENTIAL SIDE GEAR BACKLASH

(a) Install the front differential side gear thrust washer, side gear, shaft holder, four pinions, four thrust washers, No. 2 shaft and two shafts to the front differential case.

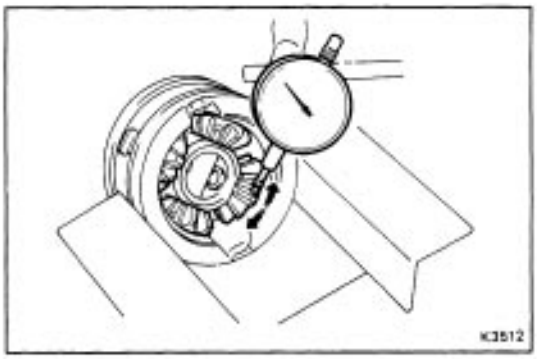

(b) Using a dial indicator, measure the backlash of one pinion gear while holding the front differential side gear toward the case.

Standard backlash: 0.05 – 0.20 mm (0.0020 – 0.0079 in.)

HINT: Do not mount the surface of No. 2 differential case which contacts with bushing in a vise.

Referring to the table below, select the thrust washer which will ensure that the backlash is within specification.

Try to select a washer of the same size.

Mark	Thickness	mm (in.)
B	1.00	(0.0394)
C	1.05	(0.0413)
D	1.10	(0.0433)
E	1.15	(0.0453)
F	1.20	(0.0472)
G	1.25	(0.0492)

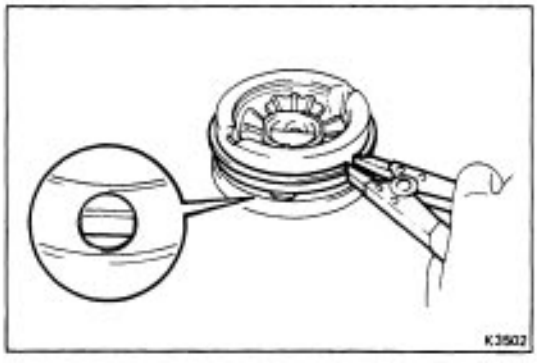

6. INSTALL SNAP RING

Using snap ring pliers, install the shaft snap ring toward to as shown.

HINT: Before installing the shaft snap ring, wrap vinyl tape around the case prevent the it from damage.



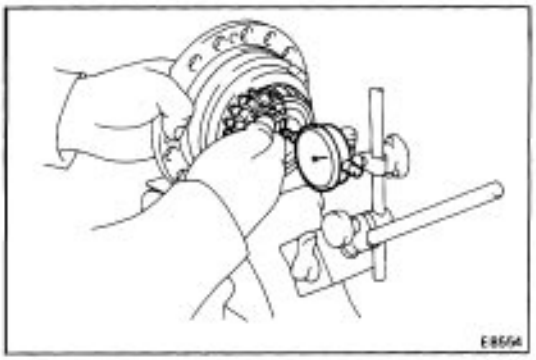

7. CHECK AND ADJUST FRONT DIFFERENTIAL SIDE GEAR THRUST CLEARANCE

(Differential No. 2 Case)

(a) Install the No. 2 side gear thrust washer, front differential side gear thrust washer, side gear and front differential case assembly to the differential No. 2 case.

HINT: Engage the front differential side gear and pinion gear of No. 2 case.

(b) Using a dial indicator, measure the thrust clearance of front differential side gear while holding the No. 2 case on the left side.

Standard clearance: 0.17 – 0.26 mm (0.0067 – 0.0102 in.)

HINT: Turning the side gear a bit, check the maximum value of thrust clearance.

Referring to the table below, select the thrust washer which will ensure that the thrust clearance within specification. Try to select a washer of the same size.

Mark	Thickness mm (in.)	Mark	Thickness mm 0 n.)
A	0.95 (0.0374)	F	1.20 (0.0472)
B	1.00 (0.0394)	G	1.25 (0.0492)
C	1.05 (0.0413)	H	1.30 (0.0512)
D	1.10 (0.0433)	J	1.35 (0.0531)
E	1.15 (0.0453)	K	1.40 (0.0551)

(c) Remove the differential No. 2 case.

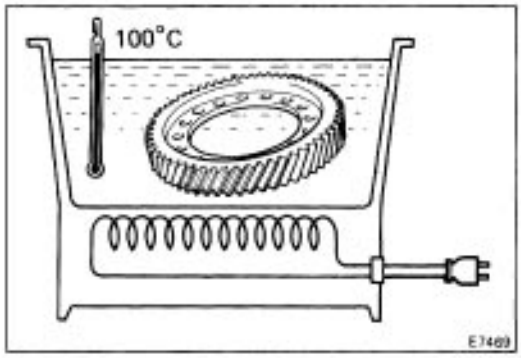

8. INSTALL RING GEAR

(a) Clean the contact surface of the differential No. 2 case.

(b) Heat the ring gear to about 100°C (212° F) in an oil bath.

NOTICE: Do not heat the ring gear above 110°C (230° F) .

(c) Clean the contact surface of the ring gear with cleaning solvent.

(d) Then quickly install the ring gear on the differential No. 2 case.

HINT: Align the matchmarks on the differential No. 2 case and connect the ring gear.

9. SELECT CENTER DIFFERENTIAL SIDE GEAR THRUST WASHER

(a) Install the front differential case assembly, side gear, thrust washer, (temporarily install) 1.0 mm (0.039 in.) size No. 2 thrust washer and No. 2 thrust washer to the differential No. 1 case assembly.

HINT: Thrust washer 1.0 mm (0.039 in.) size is for check of backlash.

Engage the front differential side gear and pinion gear of No. 1 case.

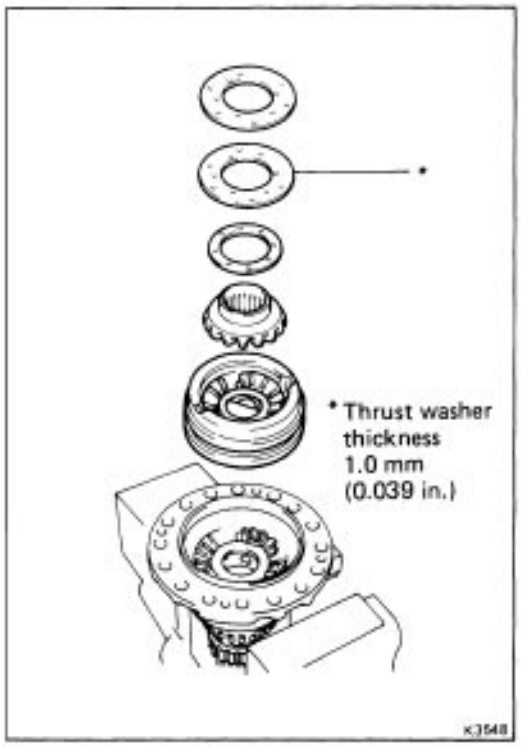

(b) Clean the No. 2 side gear thrust washer and No. 2 case.

(c) Place the Plastigage onto the No. 2 thrust washer as shown in the figure.

HINT: Place the Plastigage in four positions on top of the side gear thrust washer so that they are above the axes of the three pinion shafts inside the differential No. 1 case. Place the Plastigage so that is as close as possible to the outer side of the No. 2 thrust washer.

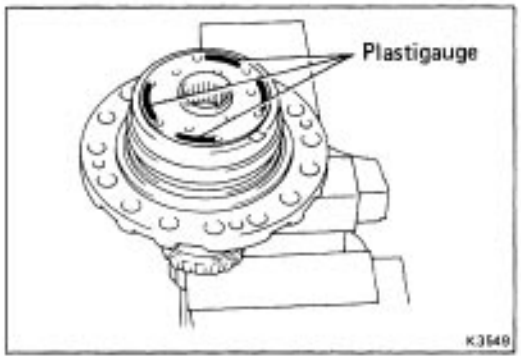

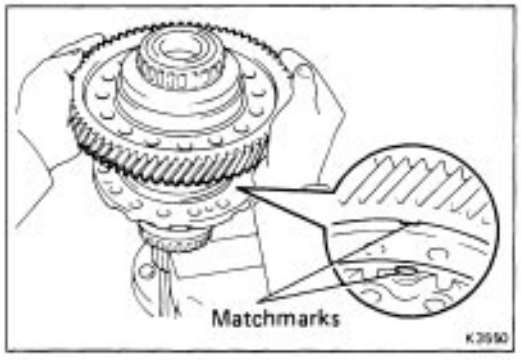

(d) Install the No. 2 case.

HINT: Align the matchmarks on the differential No. 1 case and connect the No. 2 case.

Do not turn the No. 2 case.

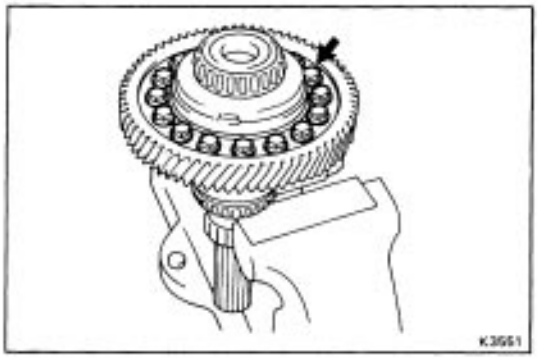

(e) Install and torque the sixteen bolts.
Torque: 1,260 kg–cm (91 ft–lb, 124 N–m)

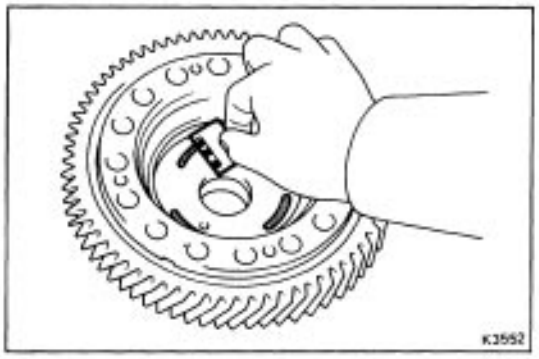

(f) Remove the sixteen bolts and differential No. 2 case up ward.
(g) Measure the Plastigage at its widest point.
Standard clearance: 0.155 – 0.250 mm (0.0061 – 0.0098 in.)
HINT: Referring to the table below, select the thrust washer which will ensure that the backlash is within specification. Try to select a washer of the same size.

Thickness	mm (in.)	Thickness	mm (in.)
0.80	(0.0315)	1.15	(0.0453)
0.85	(0.0335)	1.20	(0.0472)
0.90	(0.0354)	1.25	(0.0492)
0.95	(0.0374)	1.30	(0.0512)
1.00	(0.0394)	1.35	(0.0531)
1.05	(0.0413)	1.40	(0.0551)
1.10	(0.0433)		

(h) Remove the differential No. 2 case. No. 2 thrust washer and (temporarily install) 1.0 mm (0.039 in.) thrust washer.

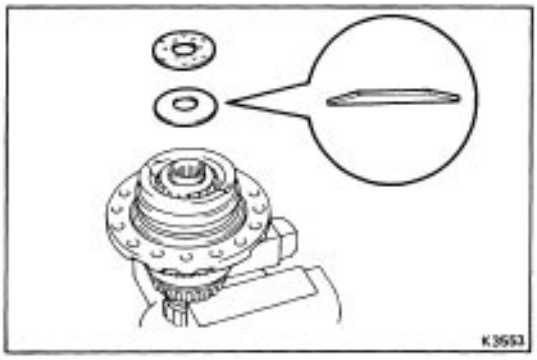

10. INSTALL DIFFERENTIAL NO.2 CASE
(a) Install the conical spring washer and No. 2 side gear thrust washer (previously selected).
HINT: Be careful not to mistake the direction of conical spring washer.

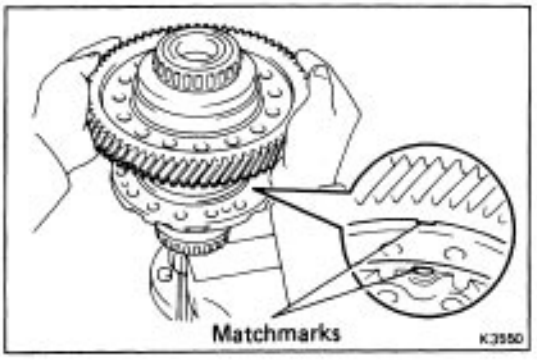

(b) Install the differential No. 2 case to the No. 1 case.
HINT: Align the matchmarks on the differential No. 1 case and connect the No. 2 case.

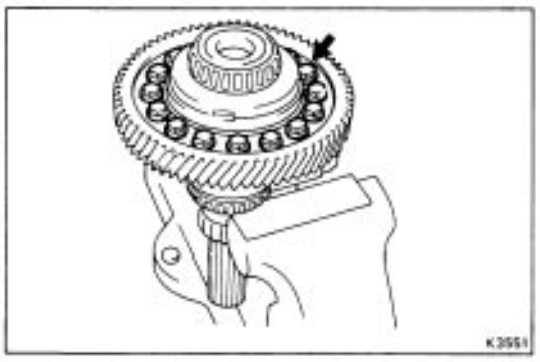

(c) Install and torque the sixteen bolts.
Torque: 1,260 kg–cm (91 ft–lb, 124 N–m)

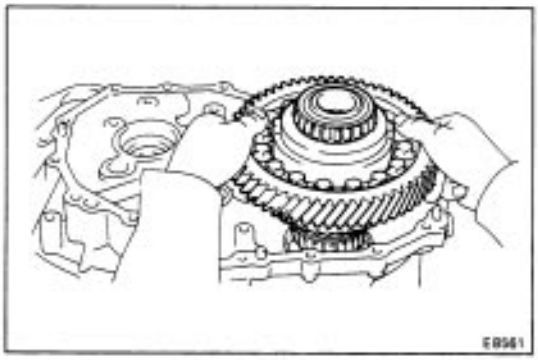

11. INSTALL DIFFERENTIAL CASE ASSEMBLY
Install the differential case assembly to the transaxle case.

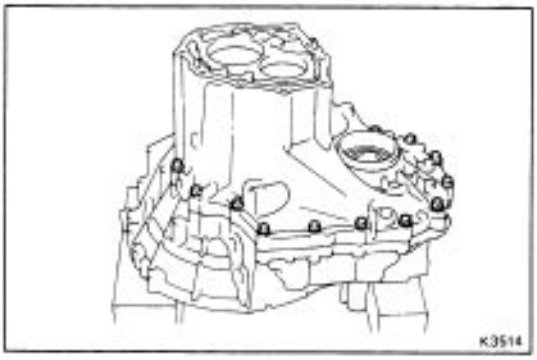

12. INSTALL TRANSMISSION CASE
(a) Install the transmission case.
HINT: If necessary, tap on the case with a plastic hammer.
(b) Install and torque the seventeen bolts.
Torque: 300 kg–cm (22 ft–lb, 29 N–m)

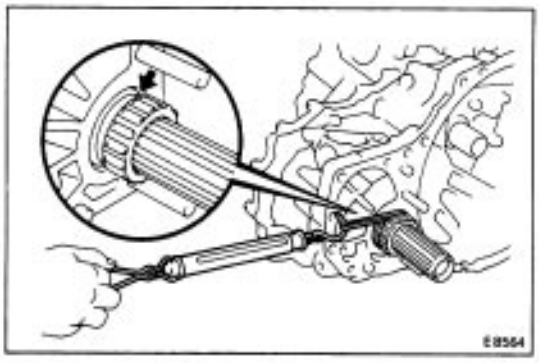

13. ADJUST DIFFERENTIAL SIDE BEARING PRELOAD
(a) Turn the differential case assembly counterclockwise and clockwise several time.
(b) Using a spring tension gauge, measure the differential case assembly preload.
Preload (at starting):
New bearing
3.2 – 6.3 kg
(7.1 – 13.9 lb, 31.4 – 61.8 N)
Reused bearing
2.0 – 4.0 kg
(4.4 – 8.8 lb, 19.6 – 39.2 N)

If the preload is not within specification, select the shims.

Mark	Thickness mm (in.)	Mark	Thickness mm (in.)
0	2.00 (0.0787)	9	2.45 (0.0965)
1	2.05 (0.0807)	A	2.50 (0.0984)
2	2.10 (0.0827)	B	2.55 (0.1004)
3	2.15 (0.0846)	C	2.60 (0.1024)
4	2.20 (0.0866)	D	2.65 (0.1043)
5	2.25 (0.0886)	E	2.70 (0.1063)
6	2.30 (0.0906)	F	2.75 (0.1083)
7	2.35 (0.0925)	G	2.80 (0.1102)
8	2.40 (0.0945)	H	2.85 (0.1122)

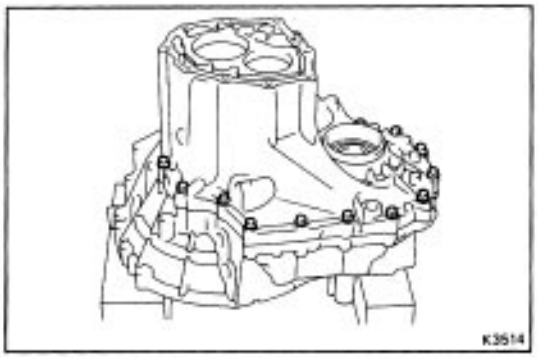

14. REMOVE TRANSMISSION CASE

Remove the seventeen bolts and tap off the case with a plastic hammer.

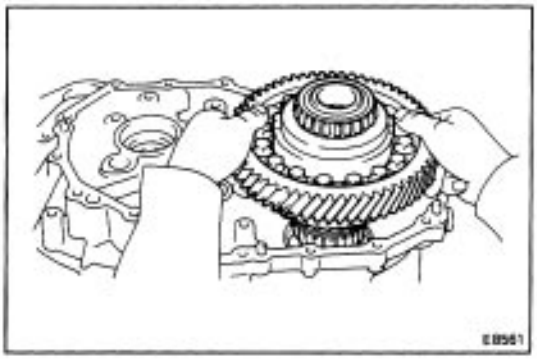

15. REMOVE DIFFERENTIAL CASE ASSEMBLY

Transfer Assembly

COMPONENT

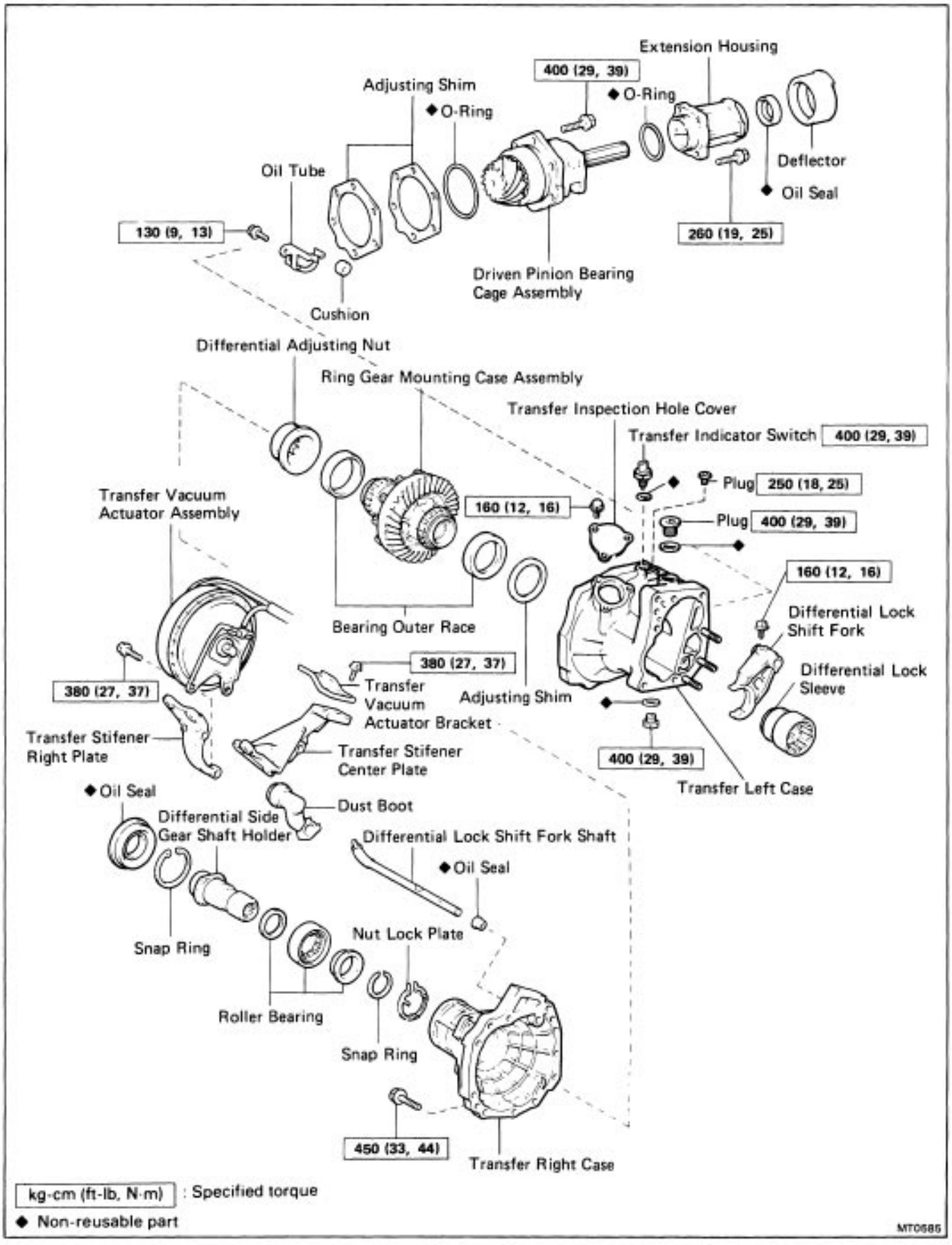

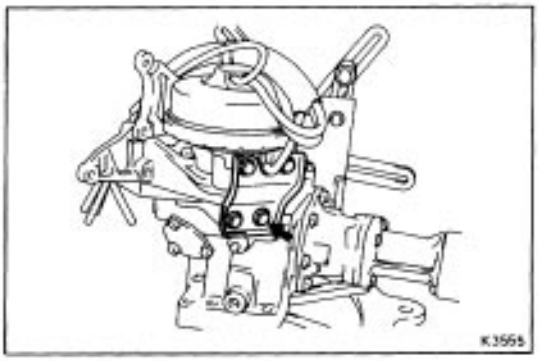

DISASSEMBLY OF TRANSFER COMPONENT PARTS

1. REMOVE TRANSFER VACUUM ACTUATOR

(a) Remove the four bolts.
(b) Remove the actuator bracket.

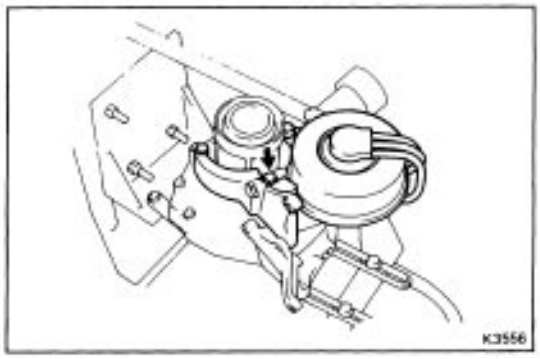

(c) Remove the three bolts.
(d) Remove the vacuum actuator and stiffener right plate.

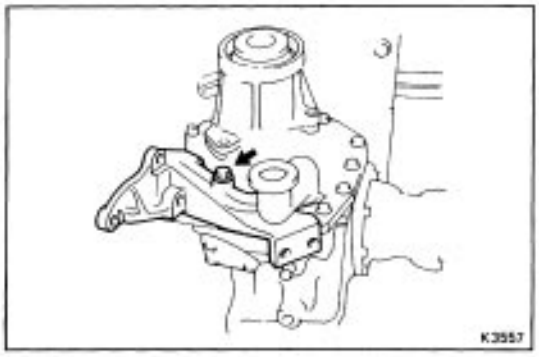

(e) Remove the bolt and remove the stiffener center plate.

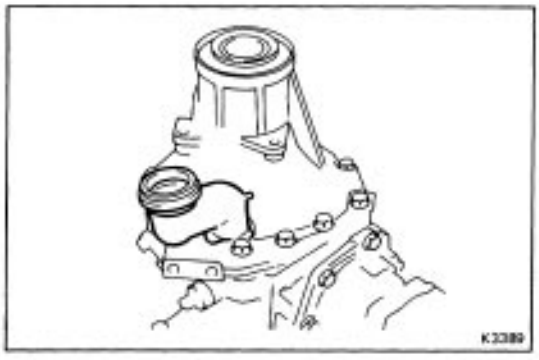

2. REMOVE DUST BOOT

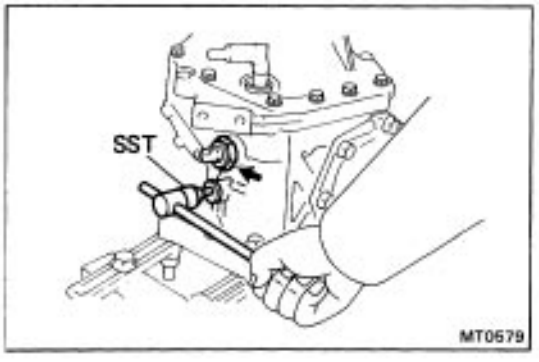

3. REMOVE DIFFERENTIAL LOCK SHIFT FORK SHAFT

(a) Remove transfer indicator switch.
(b) Using SST, remove the plug.
SST 09313–30021

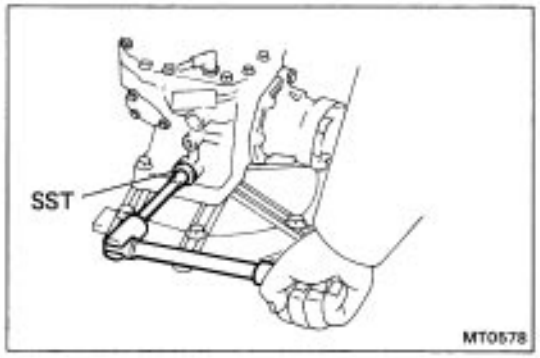

(c) Using SST, remove the plug.
SST 09043–38100

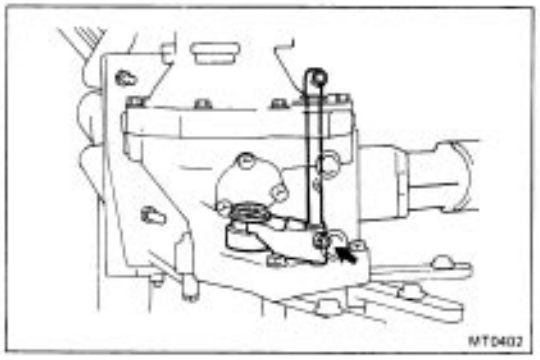

(d) Remove the set bolt.
(e) Remove the shift fork shaft, shift fork and sleeve.

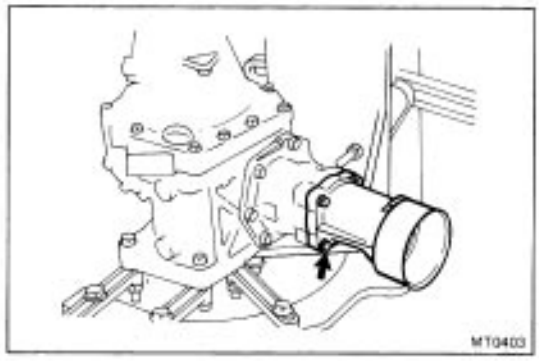

4. REMOVE EXTENSION HOUSING

(a) Remove the four bolts and tap off the housing with a plastic hammer.
(b) Remove the 0–ring and the dust deflector from the extension housing.

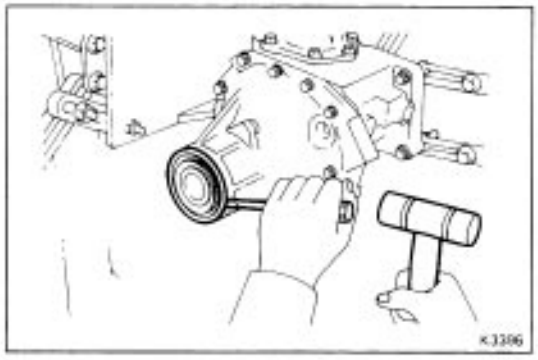

5. REMOVE SIDE GEAR SHAFT HOLDER

(a) Using a screwdriver and hammer, remove the oil seal.

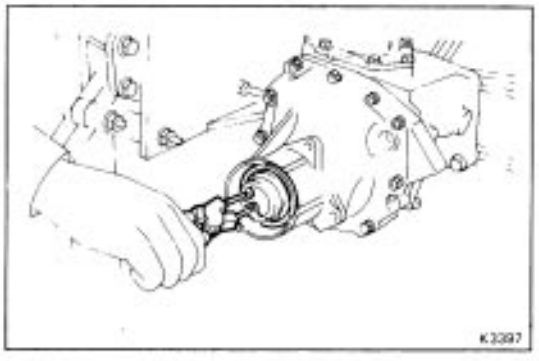

Using snap ring pliers, remove the snap ring.

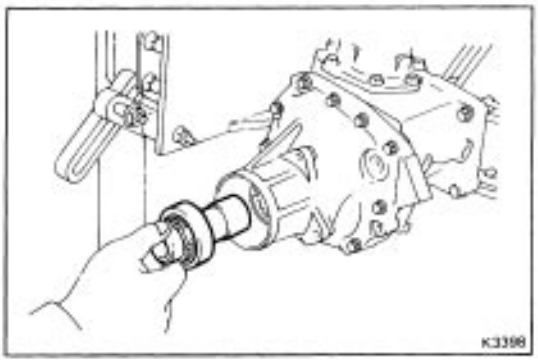

(c) Remove the shaft holder.

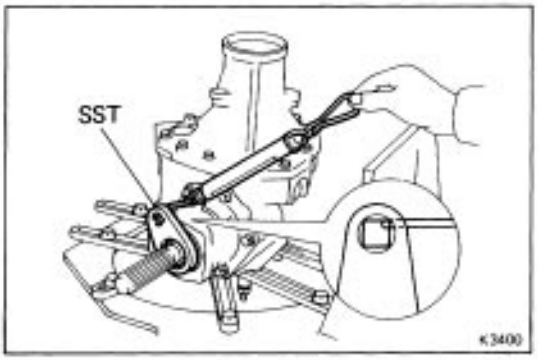

6. CHECK PRELOAD

(a) Using SST and a spring tension gauge, measure the driven pinion preload of the backlash between the driven pinion and ring gear.

SST 09326–20011

Preload (at starting) : 0.9 – 1.4 kg
(2.0–3.1 lb,8.8–13.7 N)

(b) Using SST and a spring tension gauge, measure the total preload.

SST 09326–20011

Preload (at starting) :
Add driven pinion preload
0.5–0.9kg(1.1–2.0 lb,4.9–8.8 N)

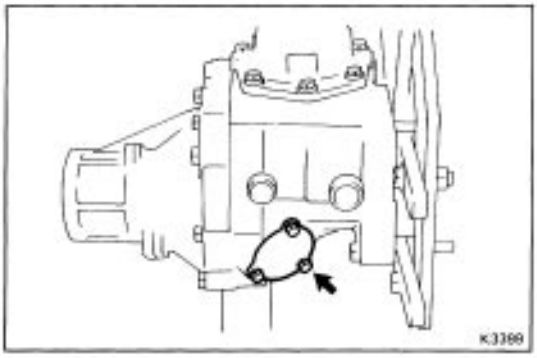

7. REMOVE TRANSFER INSPECTION HOLE COVER

Remove the three bolts and a cover.

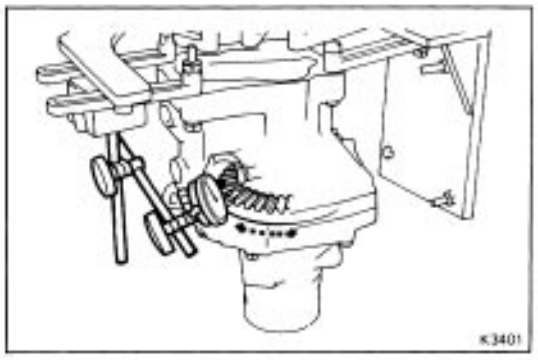

8. CHECK RING GEAR BACKLASH

Using a dial indicator, measure the ring gear backlash.

Backlash: 0.13 – 0.18 mm (0.0051 – 0.0071 in.)

9. CHECK TOOTH CONTACT

(See page MT–112)

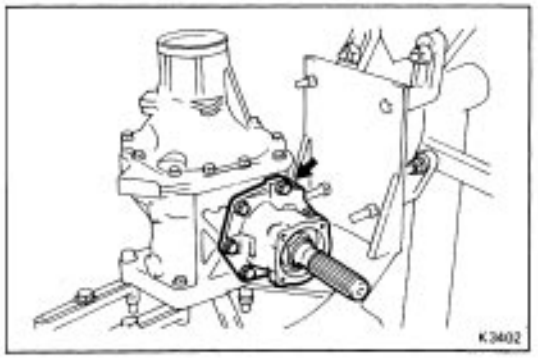

10. REMOVE DRIVEN PINION BEARING CAGE ASSEMBLY

(a) Remove the six bolts and tap off a plastic hammer.

(b) Remove the 0–ring and shim from the driven pinion bearing cage.

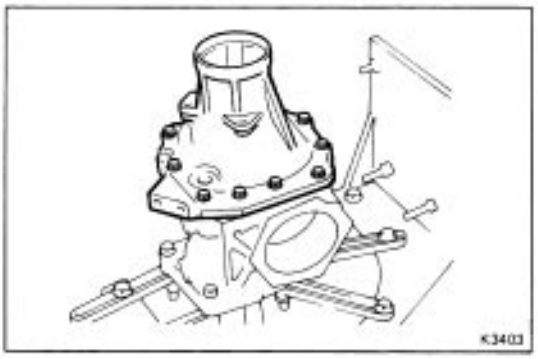

11. REMOVE TRANSFER RIGHT CASE

Remove the ten bolts and tap off the case with a plastic hammer.

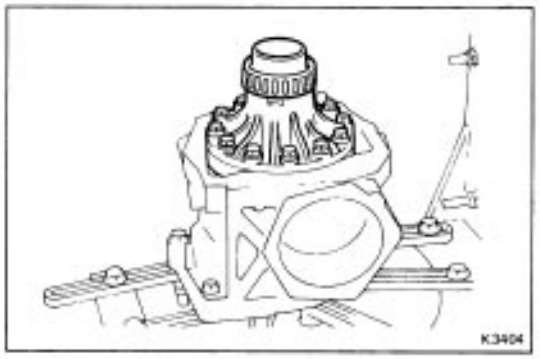

12. REMOVE RING GEAR MOUNTING CASE ASSEMBLY

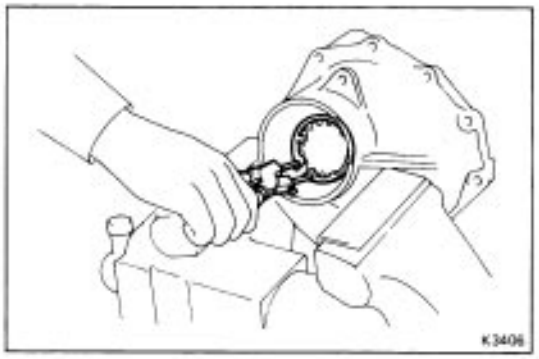

13. REMOVE ADJUSTING NUT LOCK PLATE

Using snap ring pliers remove the lock plate from the transfer right case.

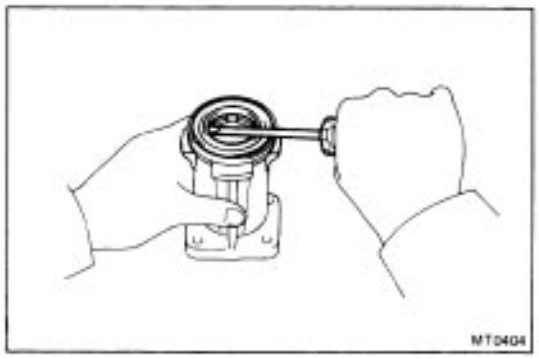

14. IF NECESSARY, REPLACE EXTENSION HOUSING OIL SEAL

(a) Using a screwdriver, remove the oil seal.

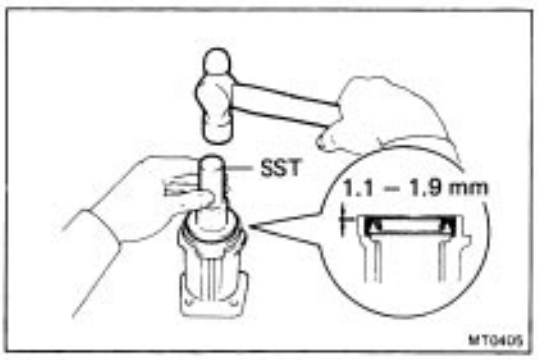

(b) Using SST and a hammer, drive in a new oil seal.

SST 09325–200 10

Oil seal depth: 1.1 – 1.9 mm (0.043 – 0.075 in.)

(c) Coat the lip of oil seal with MP grease.

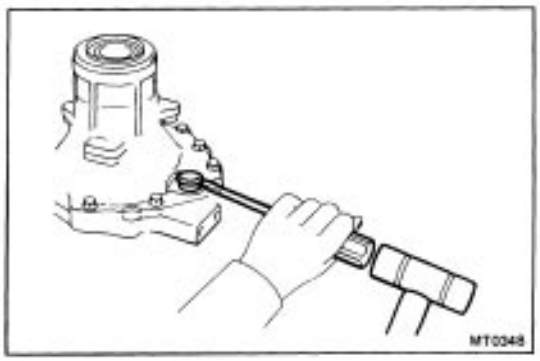

15. IF NECESSARY, REPLACE SHIFT FORK SHAFT OIL SEAL

(a) Using a screwdriver and hammer, remove the oil seal.

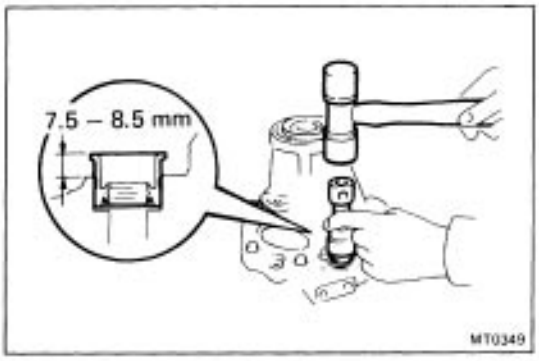

(b) Coat the lip of oil seal with MP grease.

(c) Using a socket wrench and hammer, drive in a new oil seal as shown.

Oil seal height: 7.5 – 8.5 mm (0.295 – 0.335 in.)

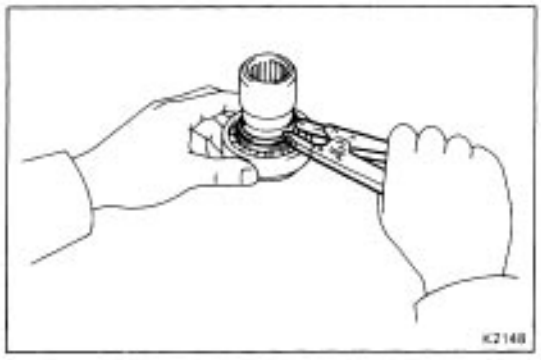

16. IF NECESSARY, REPLACE SIDE GEAR SHAFT HOLDER BEARING

(a) Using snap ring pliers, remove the snap ring.

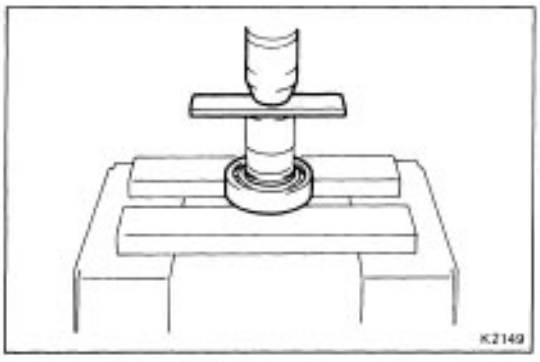

(b) Using a press, remove the bearing from the side gear shaft holder.

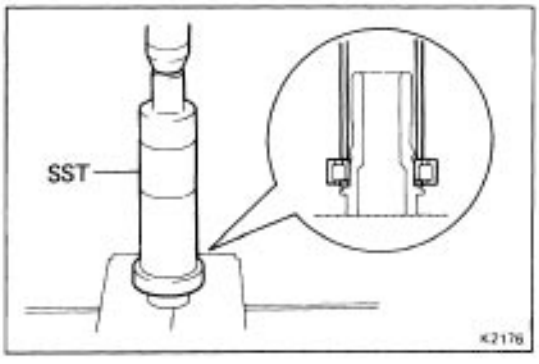

(c) Using SST and a press, install a new bearing as shown.

SST 09316–60010 (09316–00010)

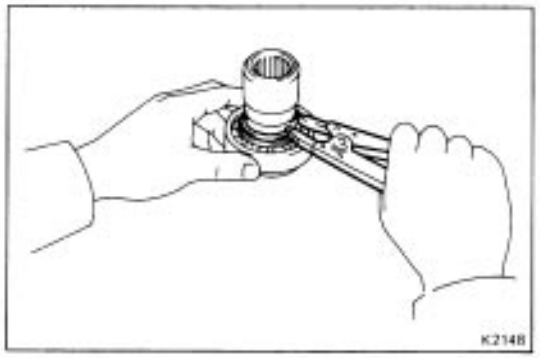

(d) Using snap ring pliers, install the snap ring.

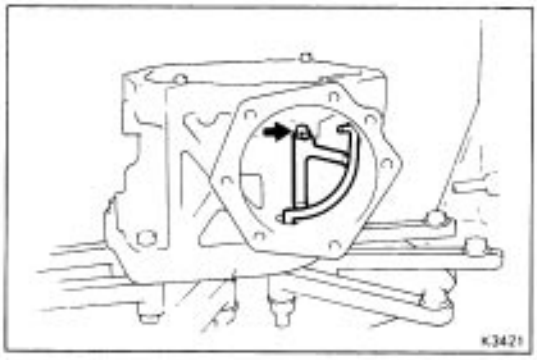

17. IF NECESSARY, REPLACE TRANSFER OIL TUBE

(a) Remove the bolt and oil tube.

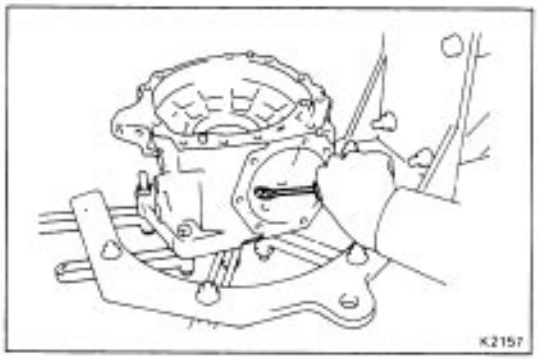

(b) Using a screwdriver, remove the cushion.

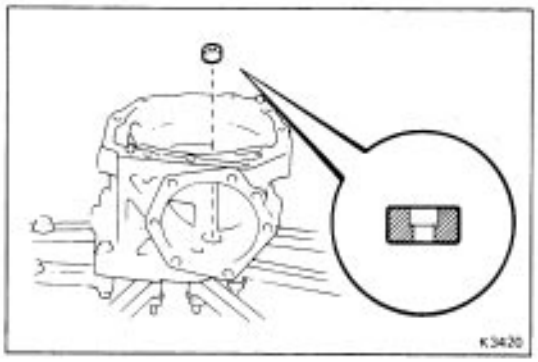

(c) Install a new cushion.

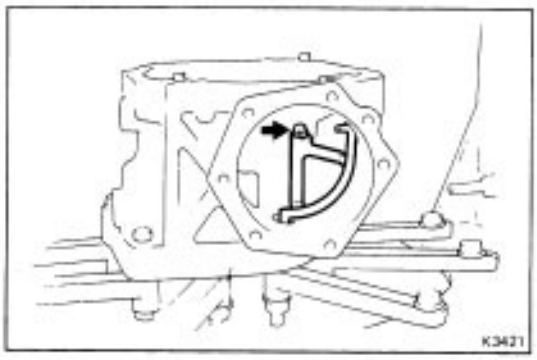

(d) Install the oil tube.

(e) Install and torque the bolt.

Torque: 130 kg–cm (9 ft–lb, 13 N–m)

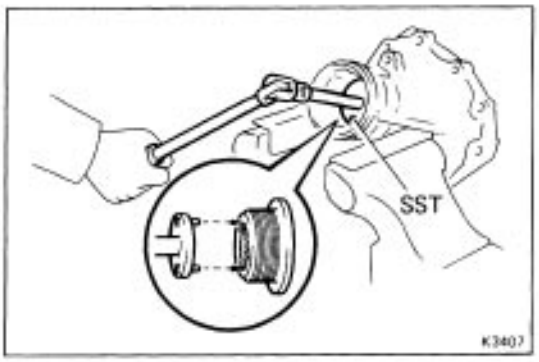

18. IF NECESSARY, REPLACE RING GEAR MOUNTING CASE SIDE BEARING OUTER RACE

(Transfer Right Case)

(a) Using SST, turn the bearing adjusting nut, remove the outer race and bearing adjusting nut.

SST 09318–20010

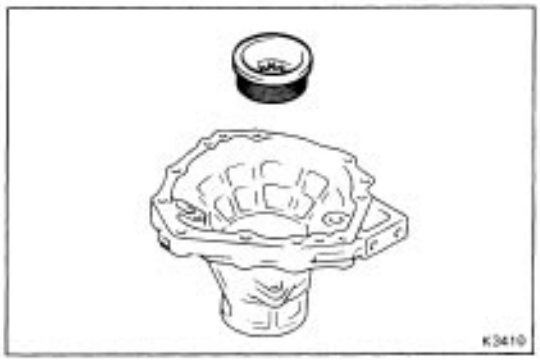

(b) Install the bearing adjusting nut until it touches the lip of the case.

HINT: If the nut is difficult to turn, use SST (09318–20010).

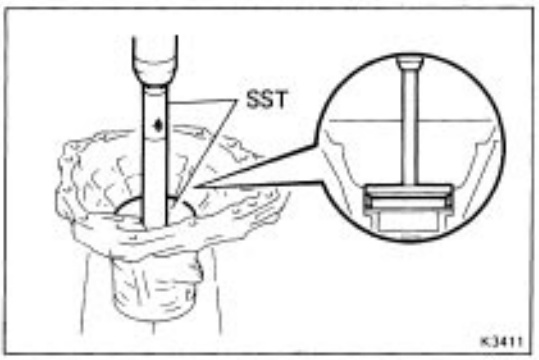

(c) Using SST and a press, install the press until it is almost touching the bearing adjusting nut.

SST 09608–35014 (09608–06020, 09608–06160)

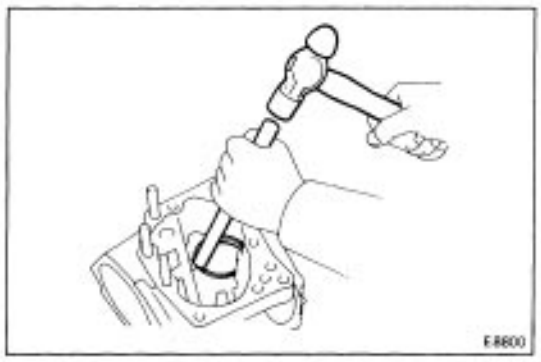

(Transfer Left Case)

(a) Using a brass bar and hammer, drive out the bearing outer race lightly and evenly.

(b) Remove the plate washer.

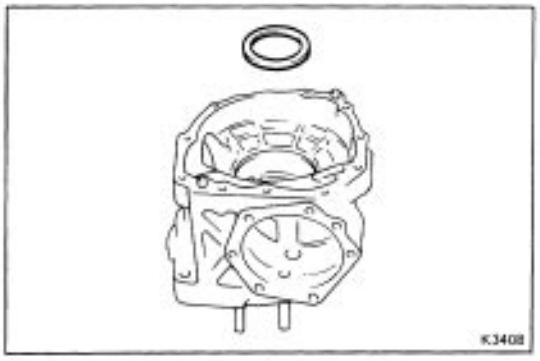

(c) Install the plate washer.

HINT: First install a washer of the same thickness as before.

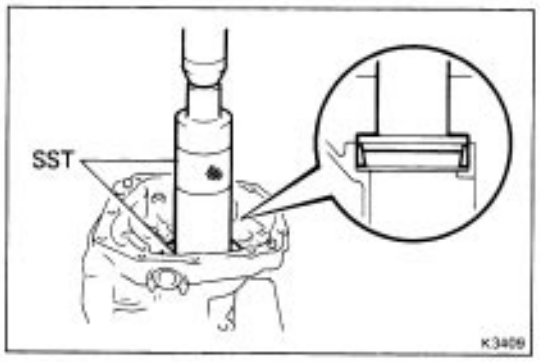

(d) Using SST and a press, install the outer race.
SST 09316–60010 (09316–00010, 09316–00060)

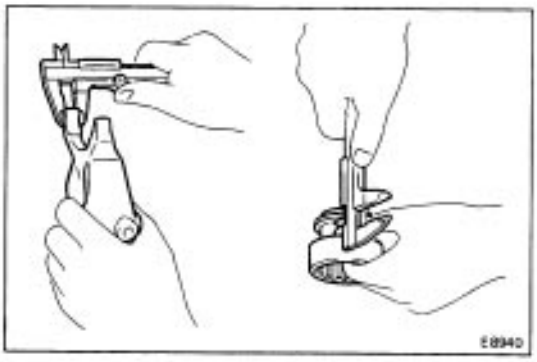

19. MEASURE CLEARANCE OF DIFFERENTIAL LOCK SHIFT FORK AND SLEEVE

Measure the clearance between the shift fork and sleeve.

Maximum clearance: 1.0 mm (0.039 in.)

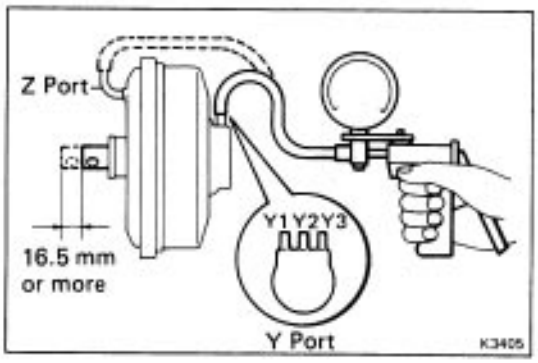

20. INSPECT TRANSFER VACUUM ACTUATOR

(a) Apply a vacuum of 500 mm Hg (19.69 in. Hg, 66.7 kPa) to port Z. Move out the push rod.

(b) Apply a vacuum of 500 mm Hg (19.69 in. Hg, 66.7 kPa) to port Y1 and Y2. Move in the push rod and measure the push rod strake.

Push rod strake: 16.5 mm (0.650 in.) or more

(c) Apply a vacuum of 500 mm Hg (19.69 in. Hg, 66.7 kPa) to port Y3. Check that no remain the vacuum in actuator.

If not, replace the actuator.

(d) After the check, apply a vacuum of 500 mmHg (19.69 in. Hg, 66.7 kPa) to port Y1 and Y2 of the actuator (Put the differential lock on the free side).

DRIVEN PINION BEARING CAGE ASSEMBLY

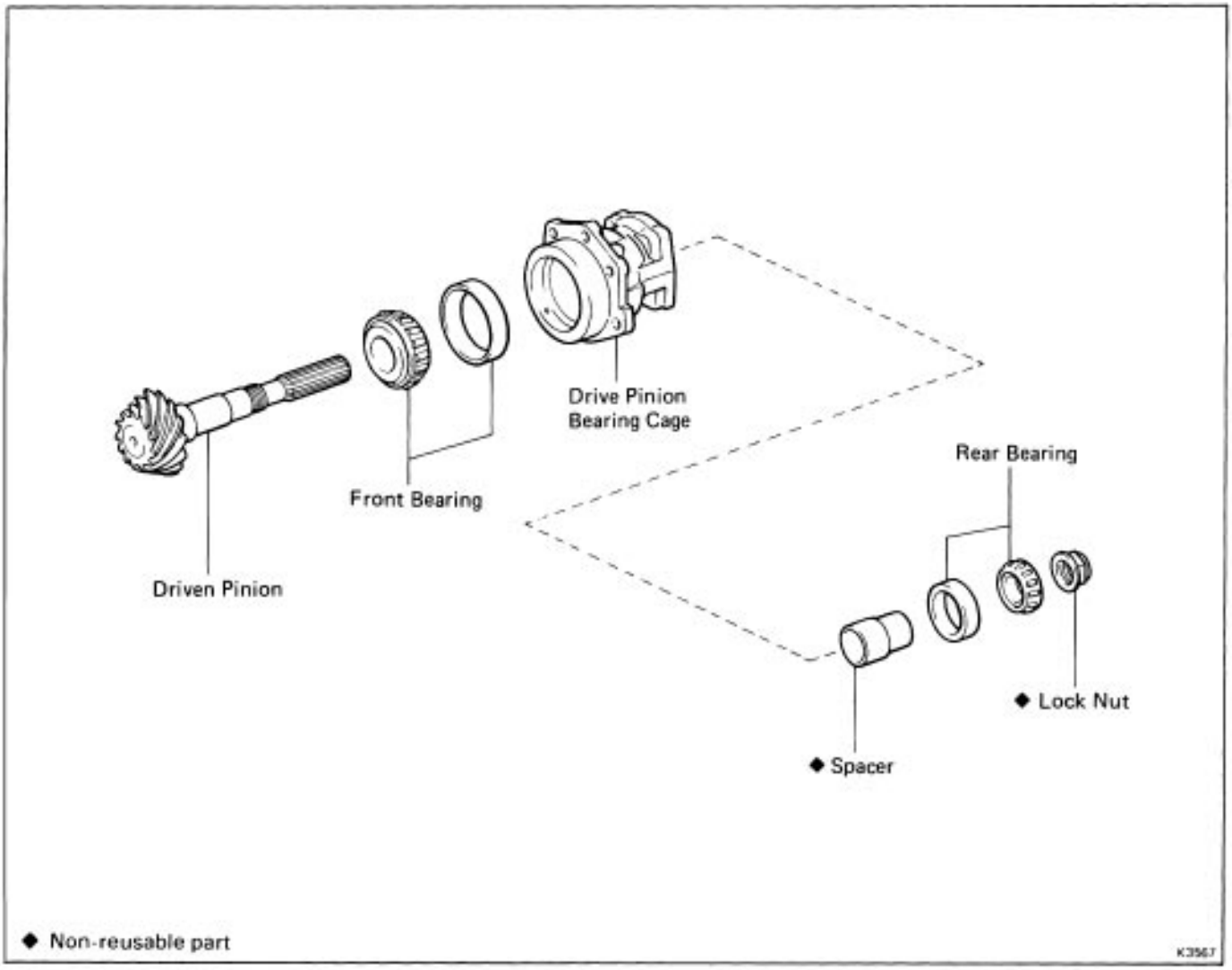

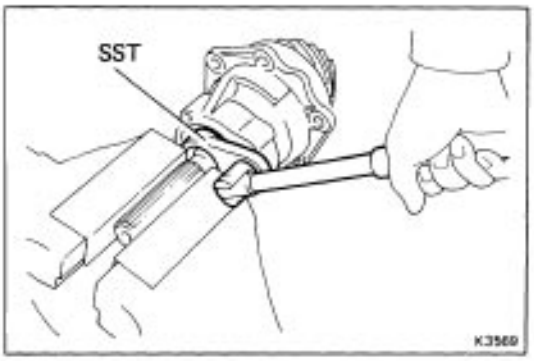

DISASSEMBLY OF DRIVEN PINION BEARING CAGE

1. REMOVE LOCK NUT

(a) Unstake the lock nut.

(b) Using SST, remove the lock nut.

SST 09326–20011

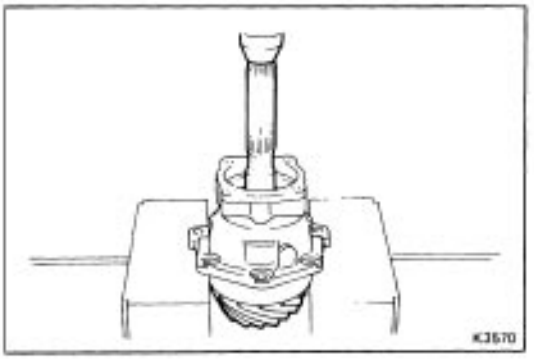

2. REMOVE DRIVEN PINION

Using a press, remove the driven pinion, rear bearing and spacer.

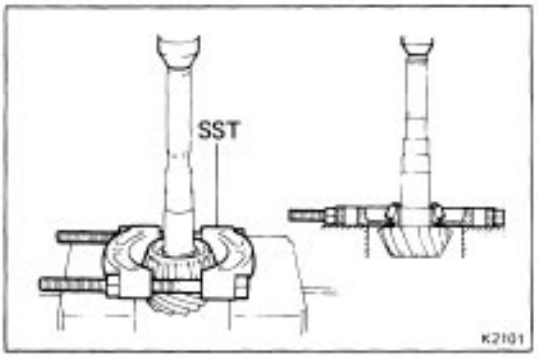

3. IF NECESSARY, REPLACE DRIVEN PINION FRONT BEARING

(a) Using SST and a press, remove the front bearing.
SST 09950–00020

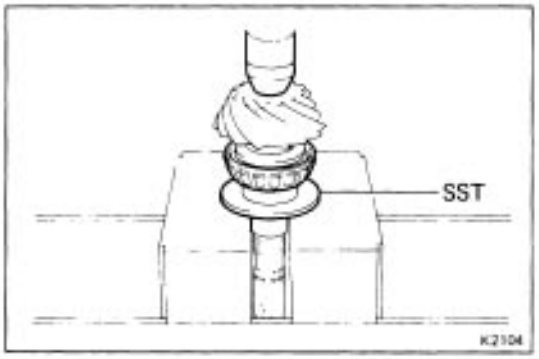

(b) Using SST and a press, install the front bearing.
SST 09506–35010

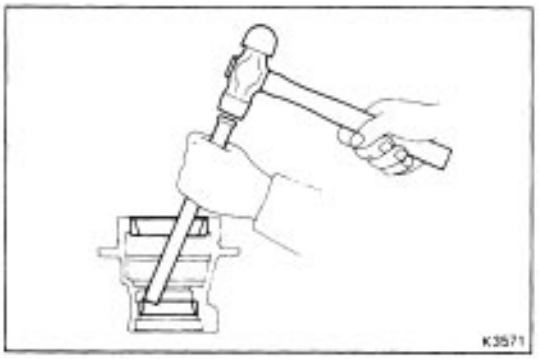

4. IF NECESSARY, REPLACE FRONT AND REAR BEARING OUTER RACE

(a) Using a brass bar and hammer, drive out the bearing outer race lightly and evenly.
HINT: Be careful not to damage the drive pinion bearing cage and bearing outer race.

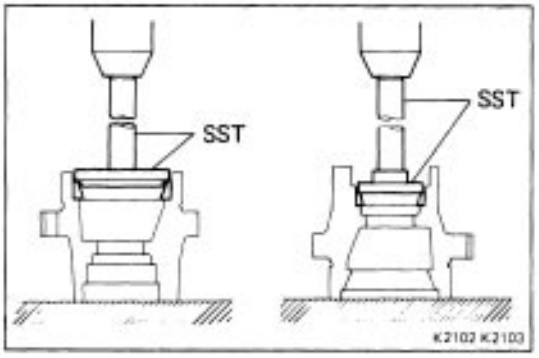

(b) Using SST and a press, install the front bearing outer race.
SST 09608–35014 (09608–06020, 09608–06210)
(c) Using SST and a press, install the rear bearing outer race.
SST 09550–10012 (09252–10010, 09555–10010)

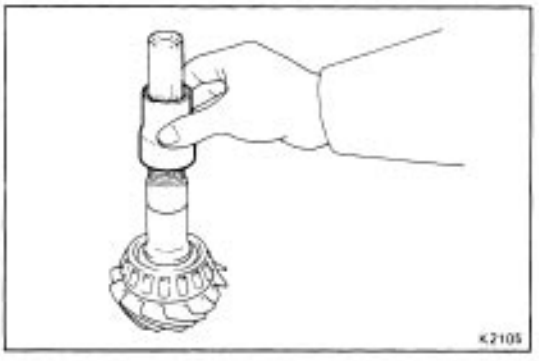

ASSEMBLY OF DRIVEN PINION BEARING CAGE

(See page MT–119)

HINT: Coat all of the sliding and rotating surface with gear oil before assembly.

1. INSTALL DRIVEN PINION BEARING CAGE

(a) Install a new bearing spacer.
HINT: Insert the spacer with the smaller facing upward.

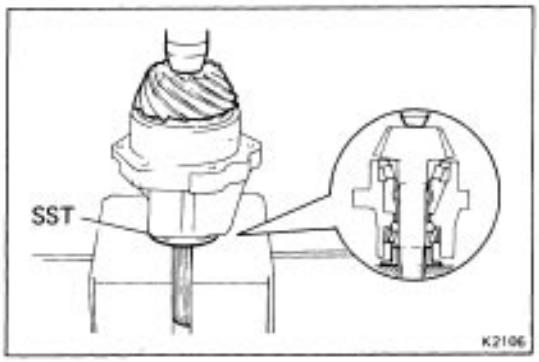

(b) Using SST and a press, install the rear bearing.
HINT: Press down until the pinion can just move slightly up and down.
SST 09316–60010 (09316–00020)

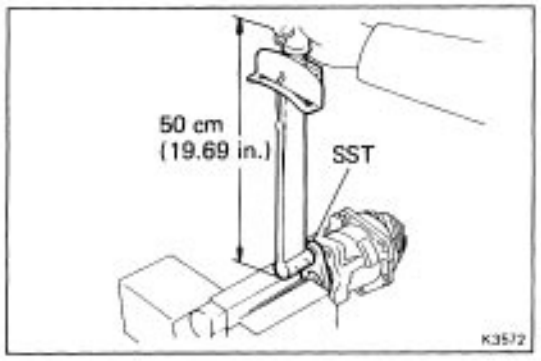

2. ADJUST DRIVEN PINION PRELOAD

(a) Using SST, install and torque the new lock nut.
SST 09326–20011
Torque: 1,100 kg–cm (80ft–lb, 108 N–m)
HINT: Use a torque wrench with a fulcrum length of 50 cm (19.69 in.).

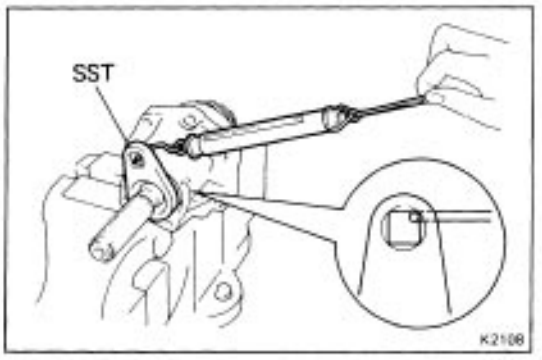

(b) Using SST and a spring tension gauge, measure the driven pinion preload.
HINT: Turn the driven pinion right and left two or three times to allow the bearings to settle.

Preload (at starting) :

New bearing 1.8 – 2.9 kg (4.0–6.4 lb, 17.6–28.4 N)

Reused bearing 0.9 – 1.4 kg (2.0–3.1lb,8.8–13.7 N)

- If preload is greater than specification, replace the bearing spacer.
- If preload is less than specification, retighten the nut 5–10° at a time until the specified preload is reached.

If the maximum torque is exceed while retightening the nut, replace the bearing spacer and repeat the preload procedure. Do not back off the pinion nut to reduce the preload.

Maximum torque: 2,200 kg–cm (159 ft–lb, 216 N–m)

3. STAKE LOCK NUT

RING GEAR MOUNTING CASE ASSEMBLY

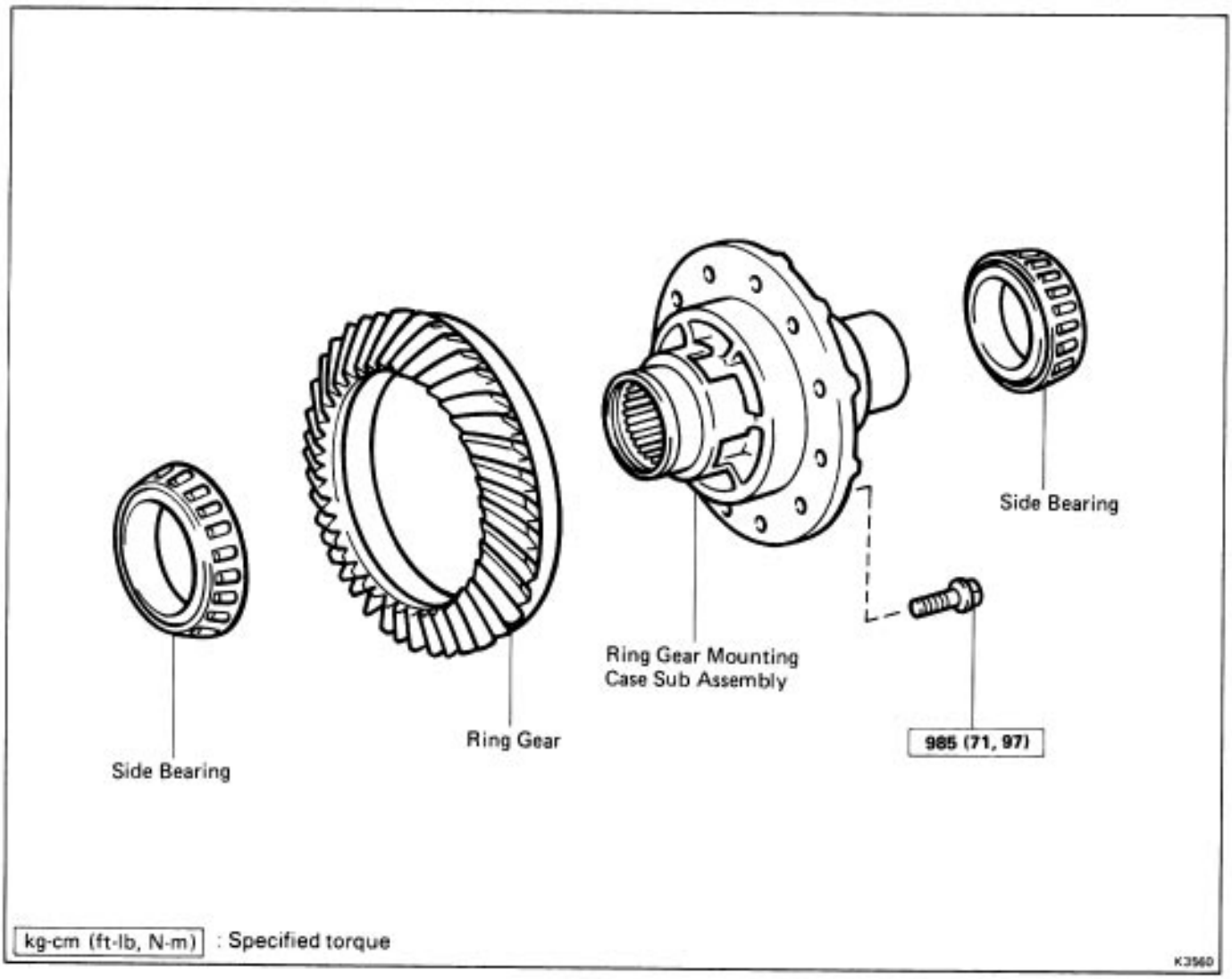

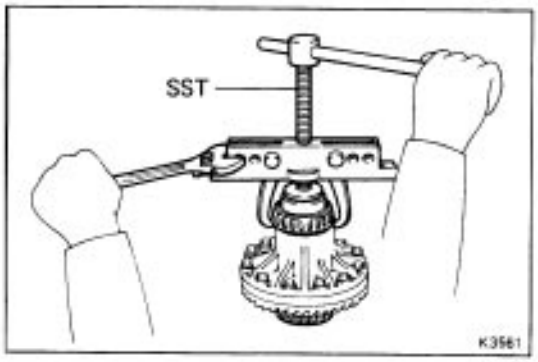

DISASSEMBLY OF RING GEAR MOUNTING CASE

1. REMOVE MOUNTING CASE SIDE BEARING

Using SST, remove the side bearing.
SST 09950–20017

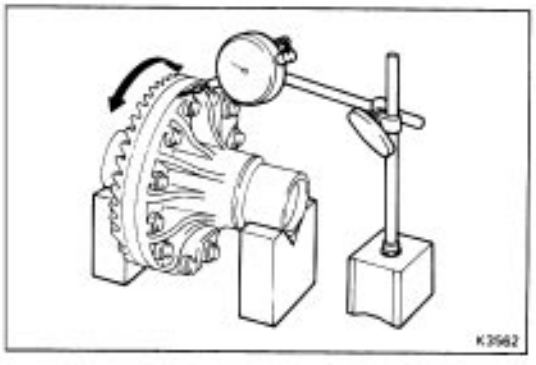

2. CHECK RING GEAR RUNOUT

Using a dial indicator, check the ring gear runout.
Maximum runout: 0.1 mm (0.004 in.)

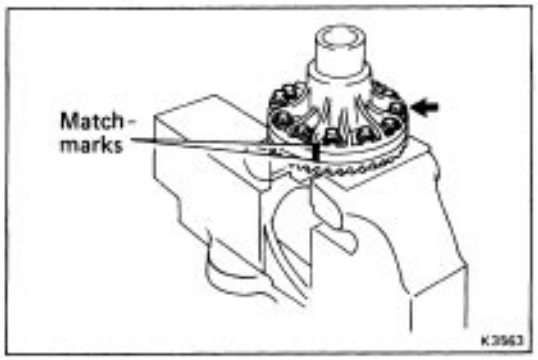

3. REMOVE RING GEAR

(a) Place the matchmarks on both the mounting case and ring gear.

(b) Remove the twelve bolts.

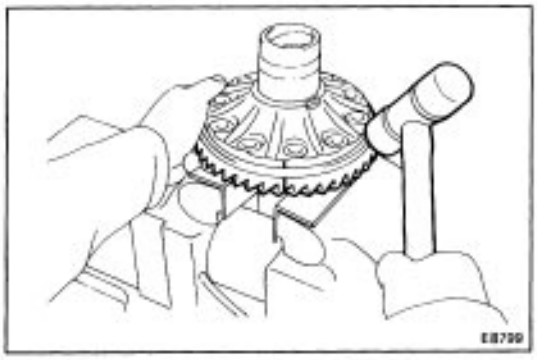

(c) Using a plastic hammer, tap out the ring gear.

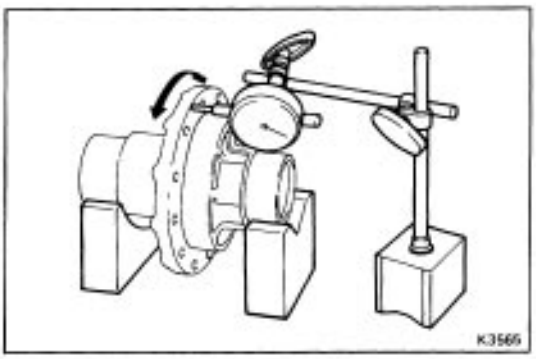

INSPECTION OF RING GEAR MOUNTING CASE

CHECK RING GEAR MOUNTING CASE RUNOUT

HINT: Perform only when the limit is exceeded in the ring gear runout inspection.

Using a dial indicator, check the mounting case runout.

Maximum runout: 0.1 mm (0.004 in.)

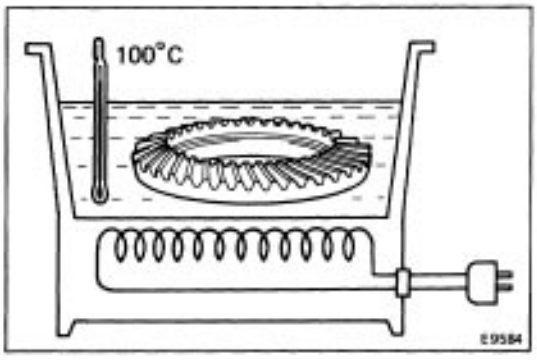

ASSEMBLY OF RING GEAR MOUNTING CASE

1. INSTALL RING GEAR

(a) Clean the contact surface of the differential case.

(b) Heat the ring gear to about 100˚C (212˚F) in an oil bath.

(e) Clean the contact surface of the ring gear with cleaning solvent.

(d) Then quickly install the ring gear on the differential case.

(e) Align the marks on the ring gear and differential case.

NOTICE: Do not heat the ring gear more than 110˚C (230˚F).

(f) Coat the ring gear set bolts with gear oil.

(g) Install and torque the set bolts uniformly, a little at a time.

Torque: 985 kg–cm (71 ft–lb, 97 N–m)

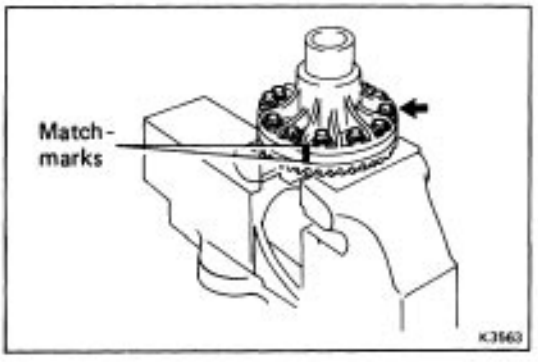

2. CHECK RING GEAR RUNOUT

(See page MT–112**)**

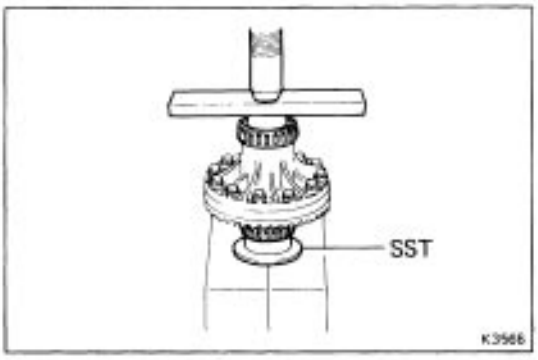

3. INSTALL MOUNTING CASE SIDE BEARING

Using SST and a press, install the two side bearing.

SST 09316–20011

HINT: Bearing inner diameter

Ring gear tooth side 55 mm (2.17 in.)

Ring gear back side 54 mm (2.13 in.)

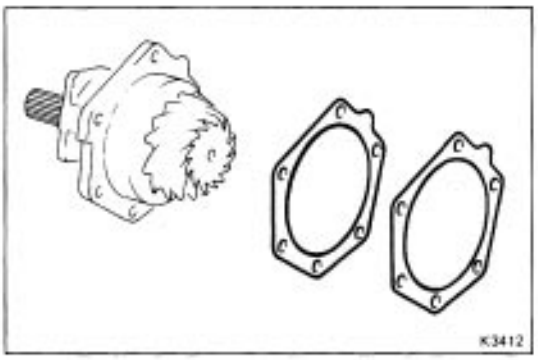

ASSEMBLY OF TRANSFER COMPONENT PARTS

(See page MT–100)

HINT: Coat all of the sliding and rotating surface with gear oil before assembly.

1. ADJUST RING GEAR BACKLASH

(a) Install the adjust shim to the driven pinion bearing cage assembly.

HINT: First install a shim of the same thickness as before.

(b) Install the driven pinion bearing cage assembly to the transfer left case.

(e) Install and torque the six bolts.

Torque: 400 kg–cm (29 ft–lb, 39 N–m)

HINT: Do not install the 0–ring.

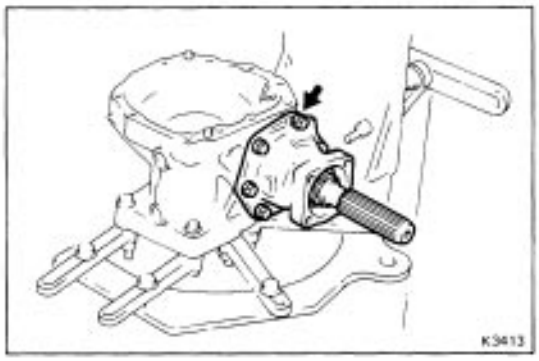

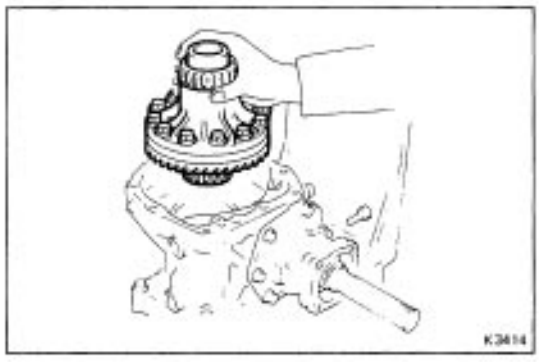

(d) Install the ring gear mounting case assembly to the transfer left case.

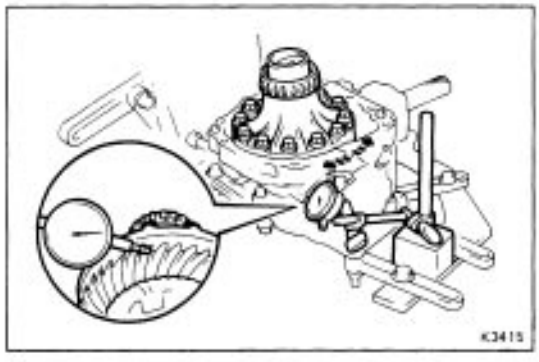

(e) Using a dial indicator, measure the ring gear backlash.

Backlash: 0.13 – 0.18 mm (0.0051 – 0.0071 in.)

(f) Referring to the table below, select the plate washer which will ensure that the backlash is within specification. Try to select a washer of the same size.

HINT: The backlash will change about 0.02 mm (0.0008 in.) with each shim thickness.

Mark	Thickness mm (in.)	Mark	Thickness mm (in.)
1	2.13 (0.0839)	13	2.49 (0.0980)
2	2.16 (0.0850)	14	2.52 (0.0980)
3	2.19 (0.0862)	15	2.55 (0.1004)
4	2.22 (0.0874)	16	2.58 (0.1016)
5	2.25 (0.0886)	17	2.61 (0.1028)
6	2.28 (0.0898)	18	2.64 (0.1039)
7	2.31 (0.0909)	19	2.67 (0.1051)
8	2.34 (0.0921)	20	2.70 (0.1063)
9	2.37 (0.0933)	21	2.73 (0.1075)
10	2.40 (0.0945)	22	2.76 (0.1087)
11	2.43 (0.0957)	23	2.79 (0.1098)
12	2.46 (0.0968)	24	2.82 (0.1110)

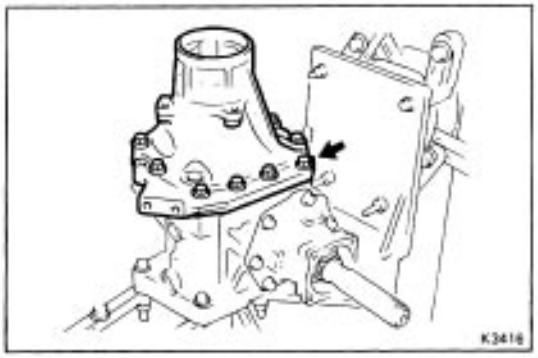

2. ADJUST TOTAL P R E LOAD

(a) Install the transfer right case.

(b) Install and torque the twelve bolts.

Torque: 450 kg–cm (33 ft–lb, 44 N–m)

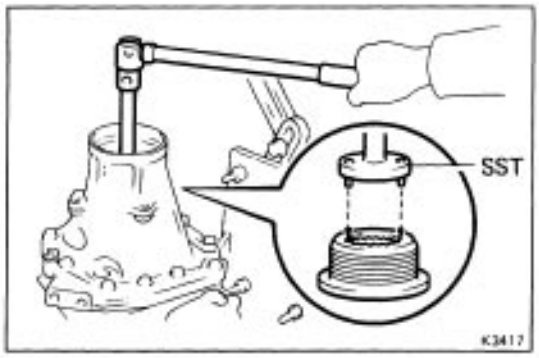

(c) Adjust the total preload by tightening the bearing adjusting nut.

Using SST, tightening the adjusting nut.

SST 09318–20010

HINT: Measure the preload while tightening the adjusting nut a little at a time.

(d) Using SST and a spring tension gauge, measure the total preload.

SST 09326–20011

Preload (at starting):

Add driven pinion preload

0.5–0.9kg (1.1 –2.0 lb,4.9–8.8 N)

HINT: Turn the output shaft counterclockwise and clockwise several times.

(e) When the standard value for total preload is exceeded, remove the transfer right case, push in the adjusting nut and outer race.

Again adjust the total preload.

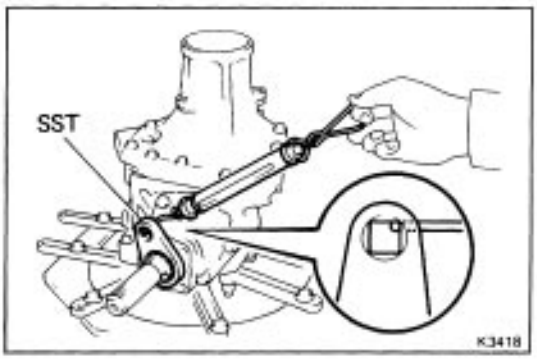

3. CHECK RING GEAR BACKLASH

(a) Using a dial indicator, measure the ring gear backlash.

Backlash: 0.13 – 0.18 mm (0.0051 – 0.0071 in.)

(b) When the backlash is outside the standard value, select a different plate washer to the one selected step 2. Again adjust the backlash and total preload.

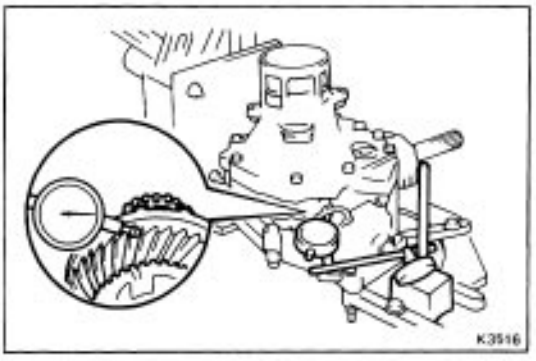

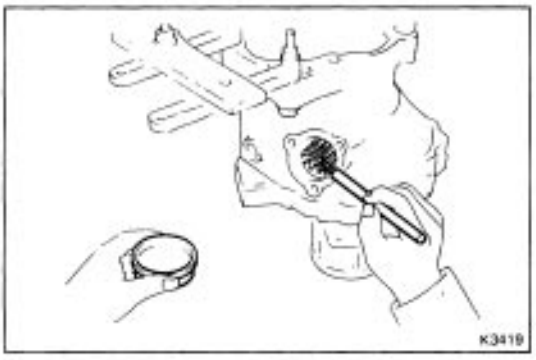

4. CHECK TOOTH CONTACT

(a) Coat 3 or 4 teeth at four different position on the ring gear with red lead.

(b) Rotate the ring gear, inspect the teeth pattern.

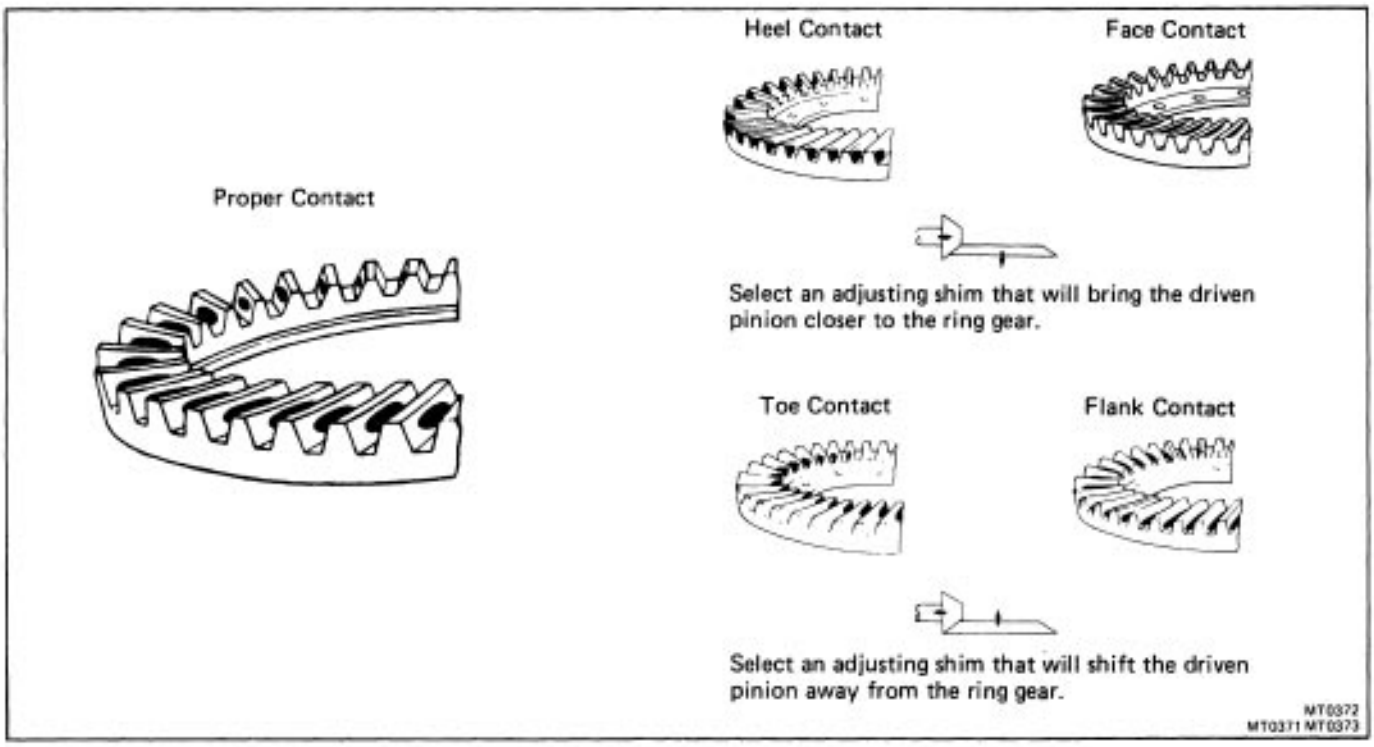

(c) If the teeth are not contacting properly, again select the proper shim and plate.

Mark	Thickness mm (in.)	Mark	Thickness mm (in.)
A	0.30 (0.0118)	F	0.45 (0.0177)
B	0.33 (0.0130)	G	0.48 (0.0189)
C	0.36 (0.0142)	H	0.51 (0.0201)
D	0.39 (0.0154)	J	0.54 (0.0213)
E	0.42 (0.0165)	K	0.57 (0.0224)

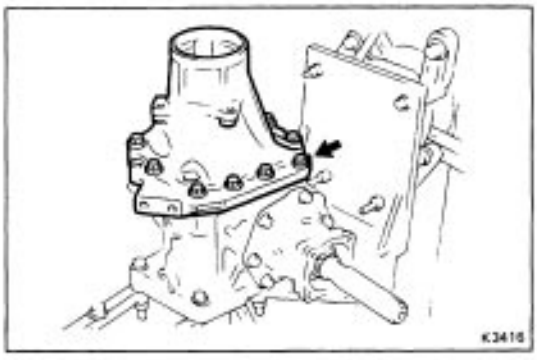

5. REMOVE RING GEAR MOUNTING CASE ASSEMBLY

(a) Remove the twelve bolts and transfer right case.

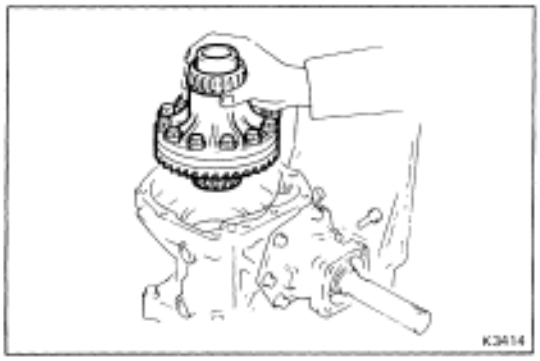

(b) Remove the ring gear mounting case assembly.

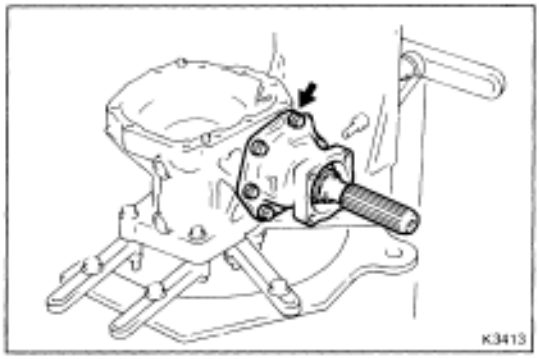

6. REMOVE DRIVEN PINION BEARING CAGE ASSEMBLY

Remove the six bolts and bearing cage assembly.

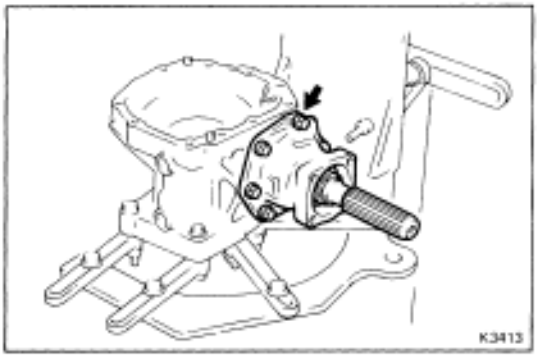

7. INSTALL DRIVEN PINION BEARING CAGE ASSEMBLY

(a) Coat the 0–ring with gear oil.
(b) Install the 0–ring to the driven pinion bearing cage.
(c) Install the driven pinion bearing cage with adjust shim (previously selected) to the transfer left case.
(d) Install and torque the six bolts.

Torque: 400 kg–cm (29 ft–lb, 39 N–m)

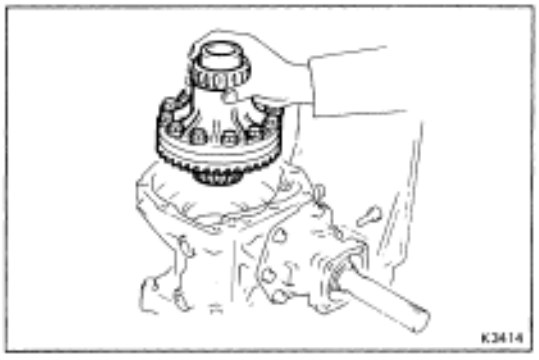

8. INSTALL RING GEAR MOUNTING CASE ASSEMBLY

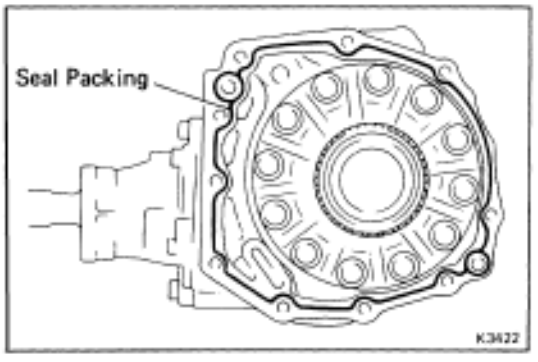

9. INSTALL TRANSFER RIGHT CASE

(a) Remove any packing material and be careful not to drop oil on the contacting surfaces of the transfer left case or right case.
(b) Apply seal packing to the transfer left case as shown in the figure.

Seal packing: Part No. 08826–00090, THREE BOND 1281 or equivalent

HINT: Install the transfer right case as soon as the seal packing is applied.

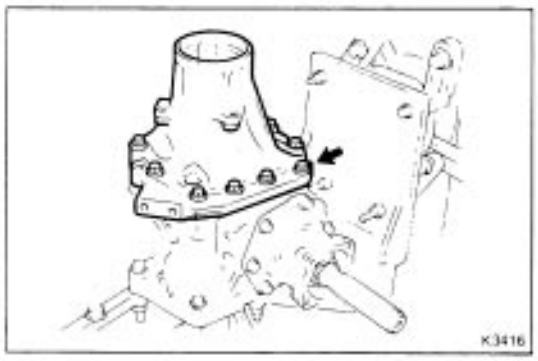

(c) Apply sealant to the bolt threads.
Sealant: Part No. 08833–00080, THREE BOND 1344, LOCTITE 242 or equivalent
(d) Install and torque the twelve bolts.
Torque: 450 kg–cm (33 ft–lb, 44 N–m)

10. CHECK TOTAL PR E LOAD
(See page MT–115**)**

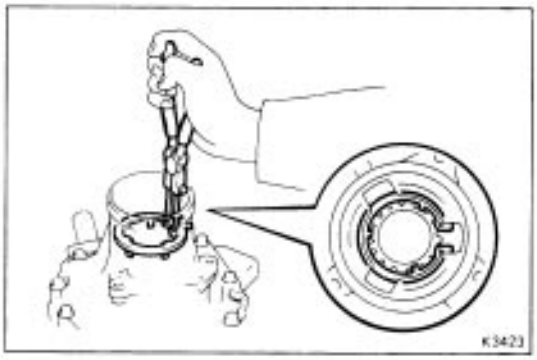

11. INSTALL ADJUSTING NUT LOCK PLATE
Using snap ring pliers, install the lock plate so that the projection from the lock plate fits properly into the groove of the adjusting nut.
HINT: Choose one of the two types of lock plate can be installed, tighten the adjusting nut to the minimum limit.

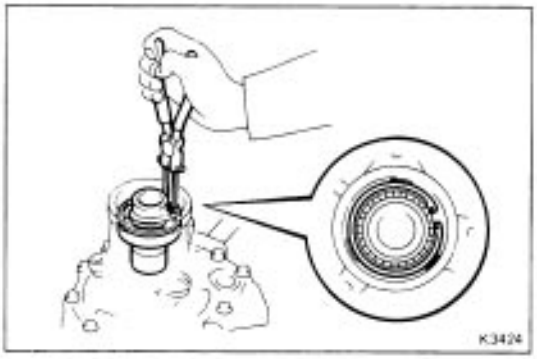

12. INSTALL SIDE GEAR SHAFT HOLDER
(a) Install the side gear shaft holder to the transfer right case.
(b) Using snap ring pliers, install the snap ring.

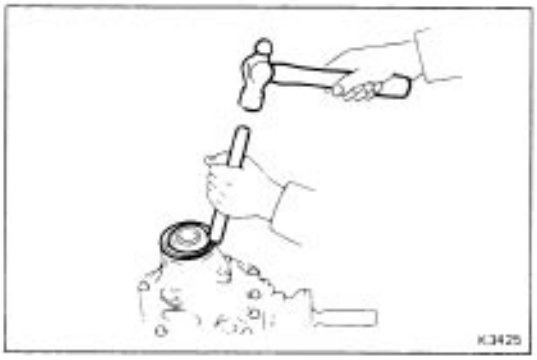

13. INSTALL OIL SEAL
(a) Coat the lip of the oil seal with MP grease.
(b) Using a brass bar and hammer, drive in a new oil seal.

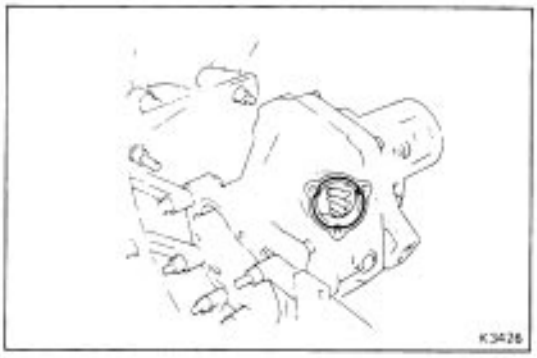

14. INSTALL TRANSFER INSPECTION HOLE COVER
(a) Remove any packing material and be careful not to drop oil on the contacting surfaces of transfer left case or transfer inspection hole cover.
(b) Apply seal packing to the transfer left case as shown in the figure.
Seal packing: Part No. 08826–00090, THREE BOND 1281 or equivalent
HINT: Install the transfer inspection hole cover as soon as the seal packing is applied.

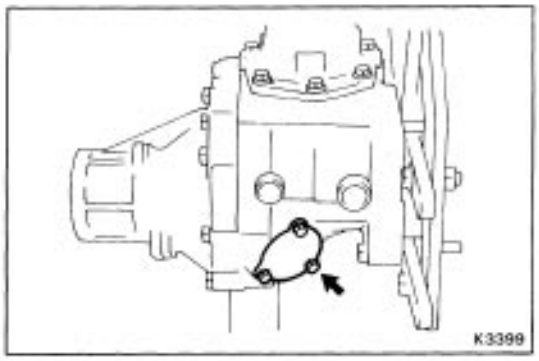

(c) Install and torque the three bolts.
Torque: 160 kg–cm (12 ft–tb, 16 N–m)

15. INSTALL EXTENSION HOUSING

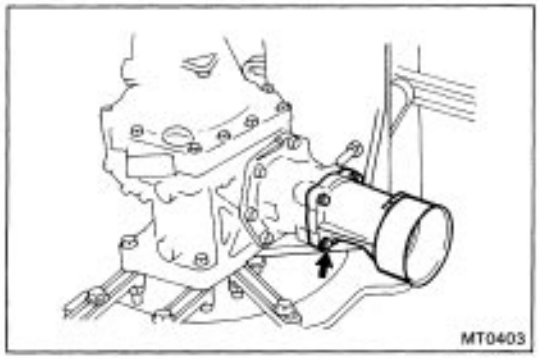

(a) Coat the O–ring with gear oil.
(b) Install the 0–ring to the extension housing.
(c) Install the extension housing to the driven pinion bearing cage.
(d) Install and torque the four bolts.
Torque: 260 kg–cm (19 ft–lb, 25 N–m)

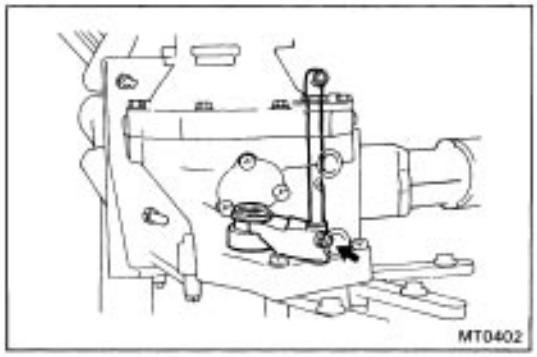

16. INSTALL DIFFERENTIAL LOCK SHIFT FORK SHAFT
(a) Install the differential lock sleeve with shift fork.
(b) Install and torque the set bolt.
Torque: 160 kg–cm (12 ft–lb, 16 N–m)

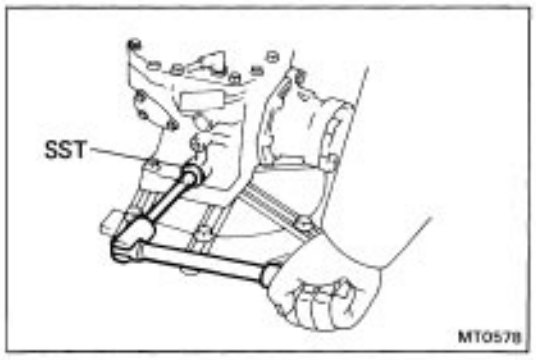

(c) Using SST, install and torque the plug.
SST 09043–38100
Torque: 400 kg–cm (29 ft–lb, 39 N–m)

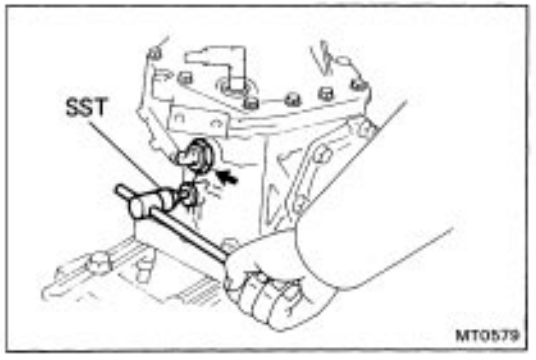

(d) Install and torque the indicator switch.
Torque: 400 kg–cm (29 ft–lb, 39 N–m)
(e) Using SST, install and torque the plug.
SST 09313–30021
Torque: 250 kg–cm (18 ft–lb, 25 N–m)

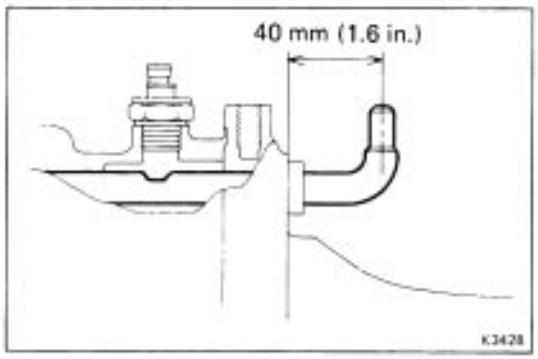

(f) Set the shift fork shaft as shown in the figure.

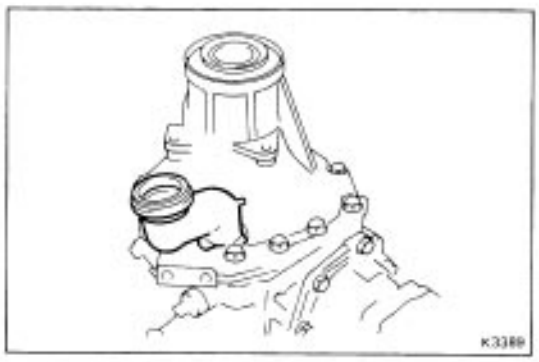

17. INSTALL DUST BOOT

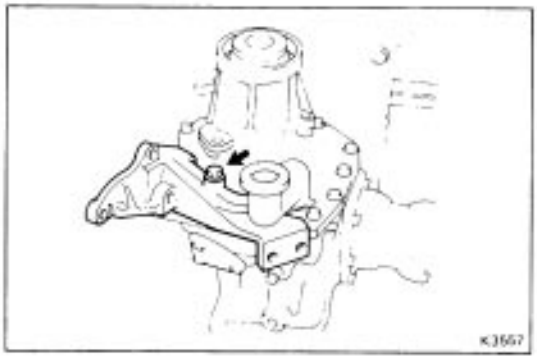

18. INSTALL TRANSFER VACUUM ACTUATOR

(a) Install stiffener center plate.
(b) Install and torque the bolt.

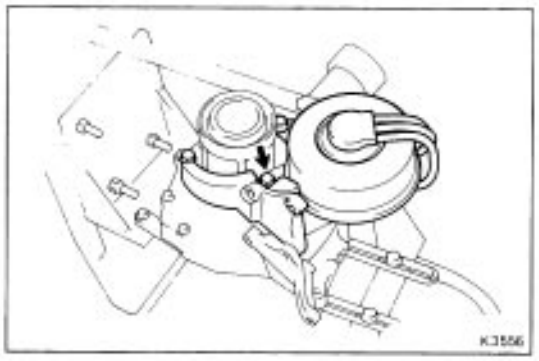

(c) Install the vacuum actuator and stiffener right plate.
(d) Install and torque the three bolts.

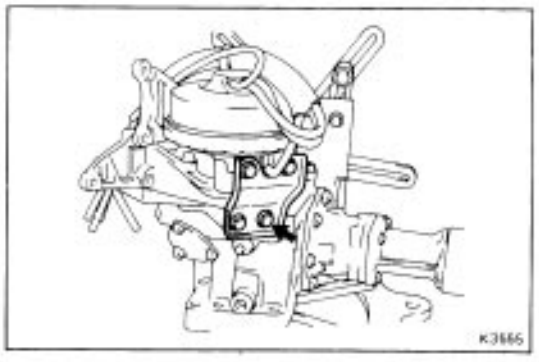

(e) Install the actuator bracket.
(f) Install and torque the four bolts.
Torque: 380 kg–cm (27 ft–lb, 37 N–m)

INSTALLATION OF COMPONENT PARTS

(See pages MT–48 to MT–50)

HINT: Coat all of the sliding and rotating surface with gear oil before assembly.

1. ADJUST OUTPUT SHAFT PRELOAD

(a) Install the output shaft assembly to the transaxle case.

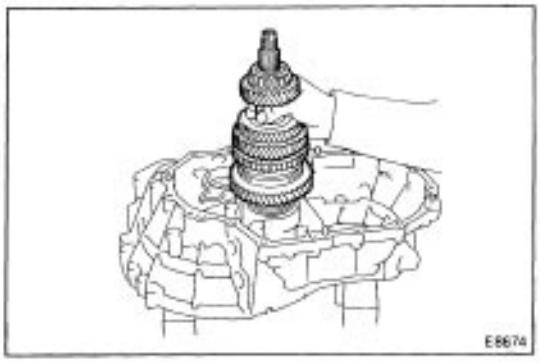

(b) Install the transmission case to the transaxle case.
If necessary, tap on the case with a plastic hammer.

(c) Install and torque the seventeen bolts.
Torque: 300 kg–cm (22 ft–lb, 29 N–m)

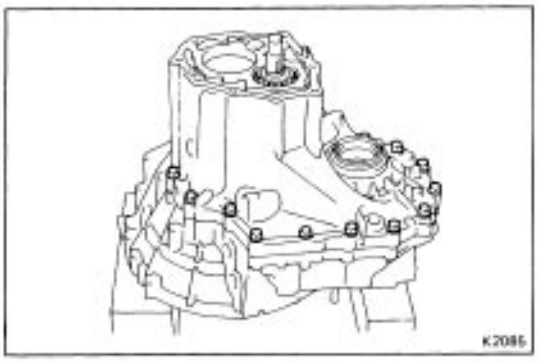

(d) Install the output shaft rear bearing outer race.

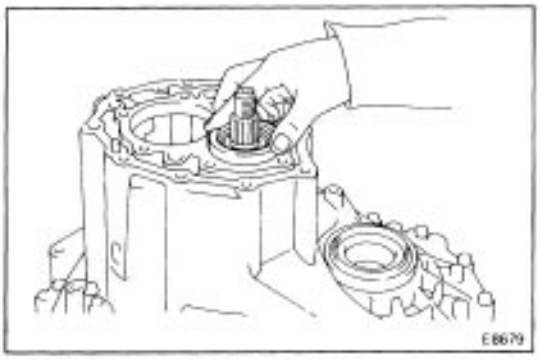

(e) Install the adjusting shim.
HINT: When reusing the output shaft rear bearing, first install a shim of the same thickness as before. If installing a new bearing, first select and install a shim of lesser thickness than before.

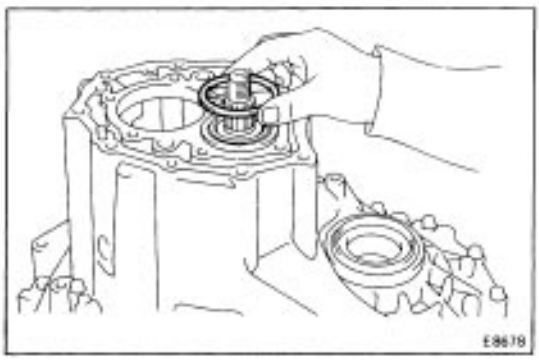

(f) Using a torx wrench, install and torque the seven torx screws.
(Torx socket wrench T45 09042–00050)
Torque: 430 kg–cm (31 ft–lb, 42 N–m)

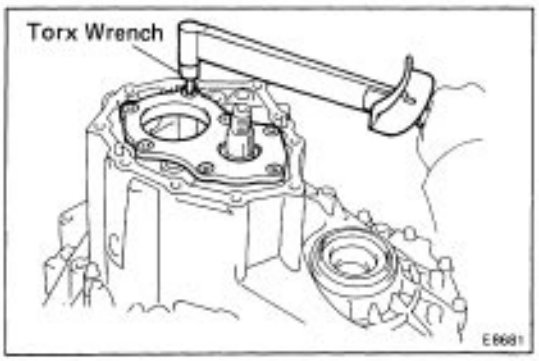

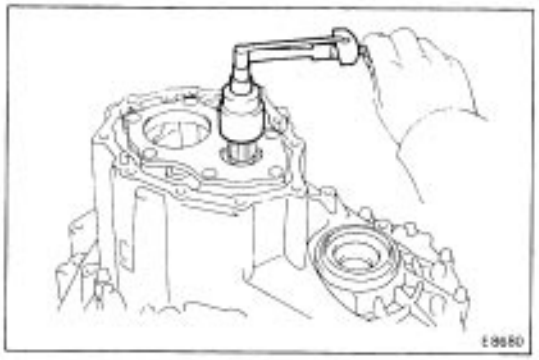

(g) Install the new lock nut to the output shaft.
(h) Turn the output shaft counterclockwise and clockwise several times.
(i) Using a torque meter, measure the preload of the output **shaft.**

Preload (at starting)

New bearing 8.0 – 16.0 kg–cm (0.58 – 1.16 ft– lb, 0.78 – 1.57 N–m)

Reused bearing 5.0 – 10.0 kg–cm (0.36–0.72 ft–lb,0.49–0.98N–m)

If the preload is not within specification, select the thrust washers.

HINT: The preload will change about 4 – 5 kg–cm (3.5 – 4.3 in.–lb, 0.4 – 0.5 N–m) with each shim thickness.

Mark	Thickness mm (in.)	Mark	Thickness mm (n.)
0	1.30 (0.0512)	D	1.95 (0.0768)
1	1.35 (0.0531)	E	2.00 (0.0787)
2	1.40 (0.0551)	F	2.05 (0.0807)
3	1.45 (0.0571)	G	2.10 (0.0827)
4	1.50 (0.0591)	H	2.15 (0.0846)
5	1.55 (0.0610)	J	2.20 (0.0866)
6	1.60 (0.0630)	K	2.25 (0.0886)
7	1.65 (0.0650)	L	2.30 (0.0906)
8	1.70 (0.0669)	M	2.35 (0.0925)
9	1.75 (0.0689)	N	2.40 (0.0945)
A	1.80 (0.0709)	P	2.45 (0.0965)
B	1.85 (0.0728)	Q	2.50 (0.0984)
C	1.90 (0.0748)		

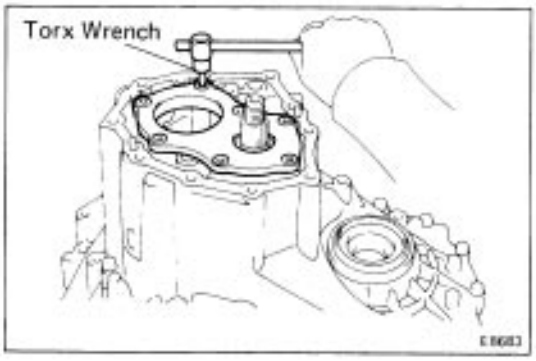

(j) Remove the lock nut.
(k) Using a torx wrench, remove the seven torx screws.
(Torx socket wrench T45 09042–00050)
(l) Remove the adjust shim.

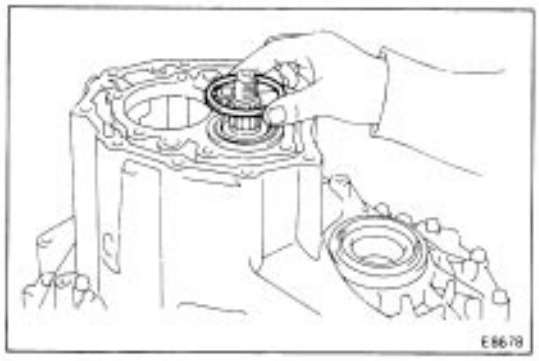

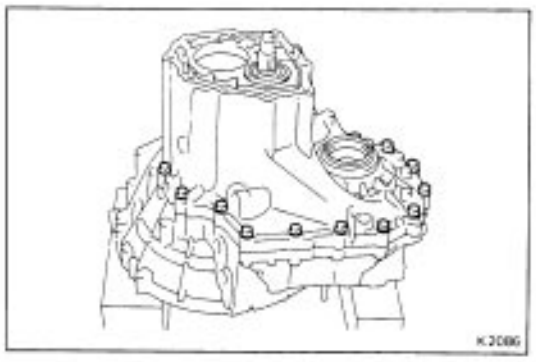

(m) Remove the seventeen bolts and tap off the case with a plastic hammer.

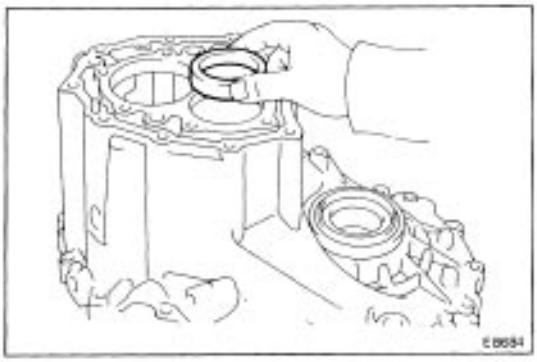

(n) Remove the output shaft rear bearing outer race.

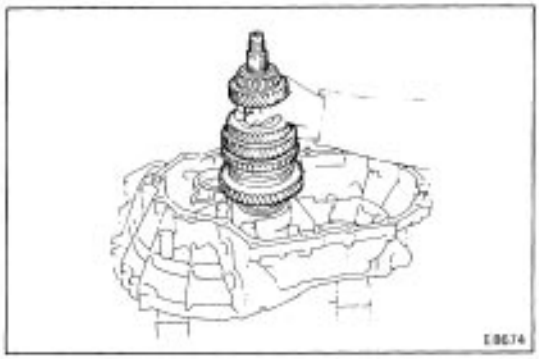

(o) Remove the output shaft assembly.

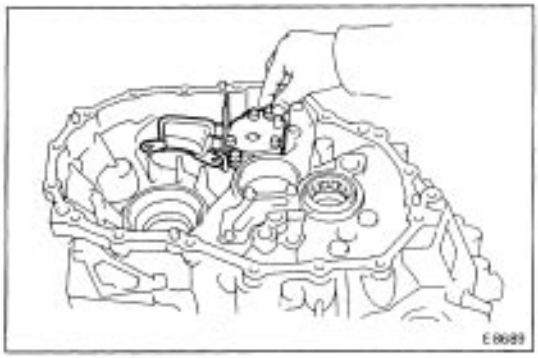

2. INSTALL OIL PUMP ASSEMBLY AND OIL PIPE

(a) Install the oil pump assembly and temporarily tighten the two bolts.

HINT: Do not drop the oil pump gasket.

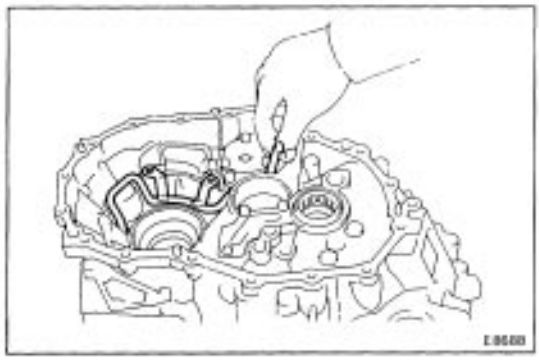

(b) Install the oil pipe.

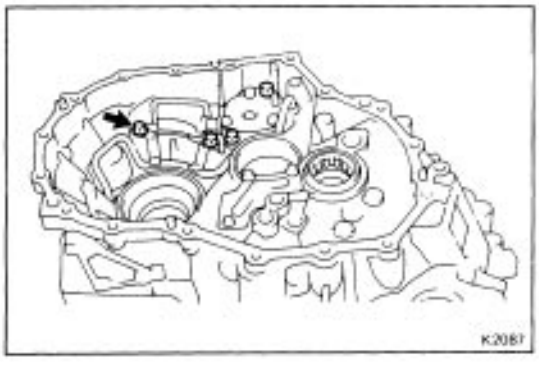

(c) Torque the four bolts.

Torque: 175 kg–cm (13 ft–lb, 17 N–m)

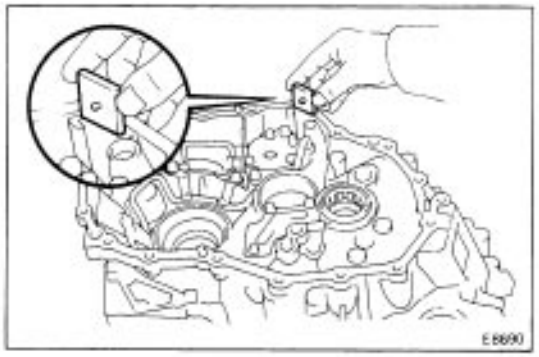

3. INSTALL MAGNET TO TRANSAXLE CASE

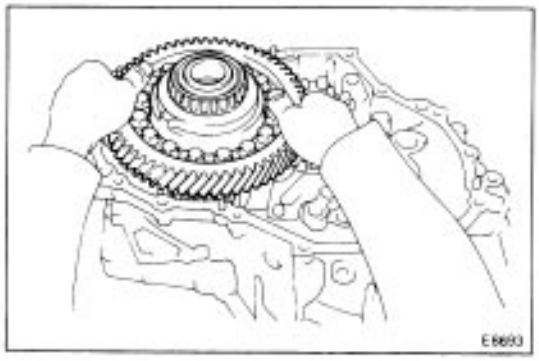

4. INSTALL DIFFERENTIAL CASE ASSEMBLY

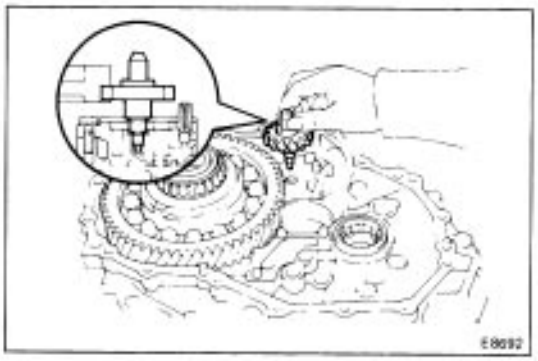

5. INSTALL OIL PUMP DRIVE GEAR

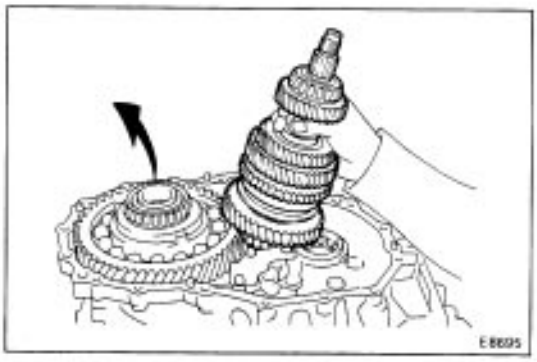

6. INSTALL OUTPUT SHAFT ASSEMBLY

Lifting the differential case assembly, install the output shaft assembly.

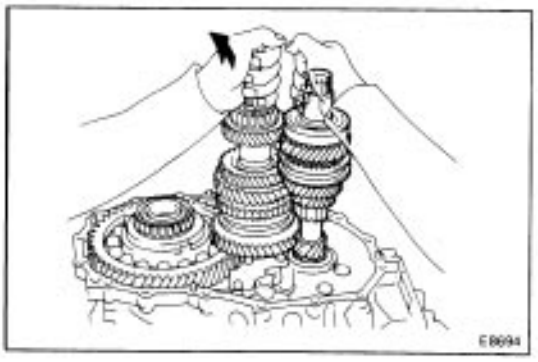

7. INSTALL INPUT SHAFT ASSEMBLY

Leaning the output shaft assembly to the differential case side, install the input shaft assembly.

HINT: When you install the input shaft assembly, be careful not to scratch the oil seal.

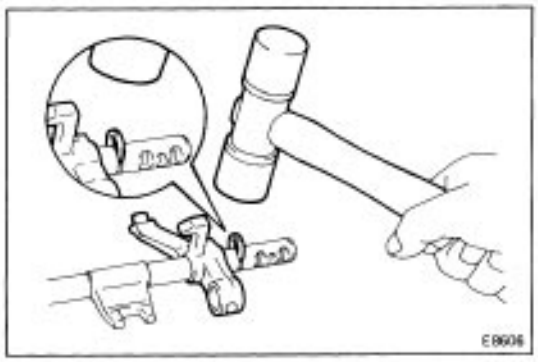

8. INSTALL SNAP RING

(a) Install the reverse shift fork to the No. 3 shift fork.

(b) Using a plastic hammer, install the snap ring.

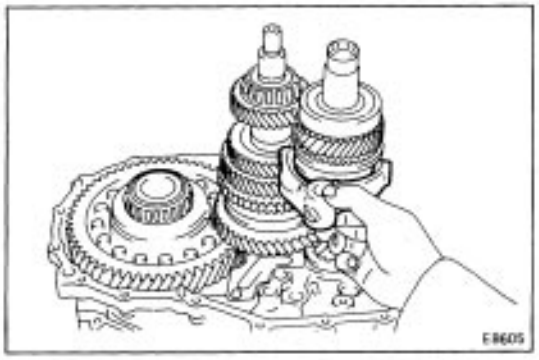

9. INSTALL NO.2 SHIFT FORK AND NO.3 SHIFT FORK SHAFT WITH REVERSE SHIFT FORK

(a) Place No. 2 shift fork into the groove of No. 2 hub sleeve.

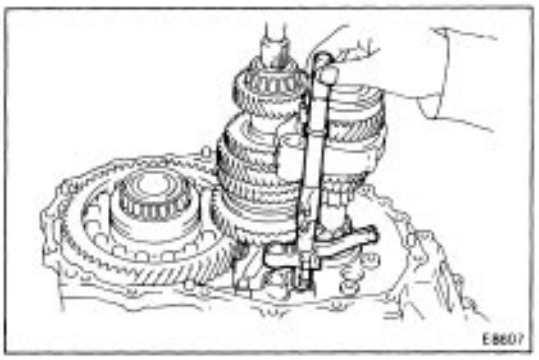

(b) Install the No. 3 shift fork shaft with reverse shift fork to the case.

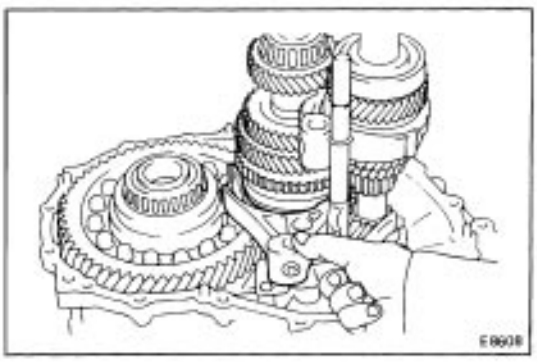

10. INSTALL NO.1 SHIFT FORK, SHIFT HEAD AND NO.2 SHIFT FORK SHAFT.

(a) Place No. 1 shift fork into the groove of No. 1 hub sleeve.

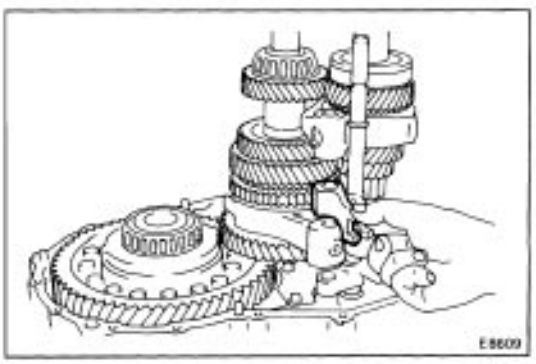

(b) Put shift head onto the No. 1 shift fork.

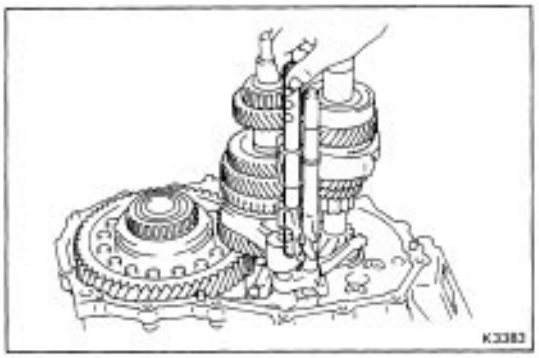

(c) Install the No. 2 shift fork shaft to the case, through the No. 2 shift fork, the shift head and the No. 1 shift fork.

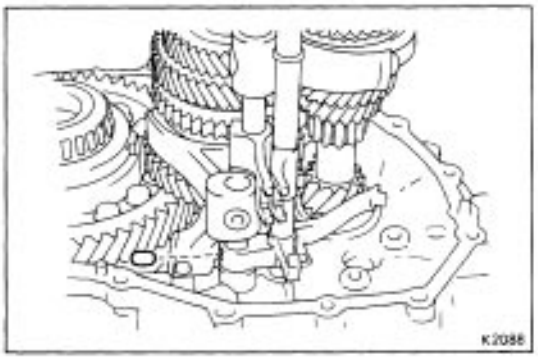

11. INSTALL NO. 1 SHIFT FORK SHAFT

(a) Using a magnetic finger, install the interlock roller into the reverse shift fork.

HINT: Align the groove of No. 1 fork shaft with the interlock roller hole of reverse shift fork.

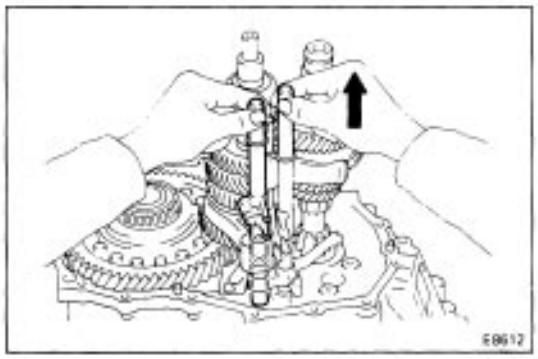

(b) Install the No. 1 shift fork shaft to the case, through the No. 1 shift fork and reverse shift fork.

HINT: If it is difficult to put the No. 1 shift fork shaft through the reverse shift fork, pull up the No. 3 shift fork shaft.

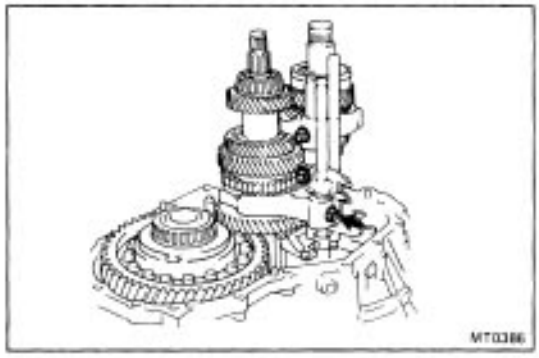

12. INSTALL SET BOLTS

Install and torque the three bolts.

Torque: 240 kg–cm (17 ft–lb, 24 N–m)

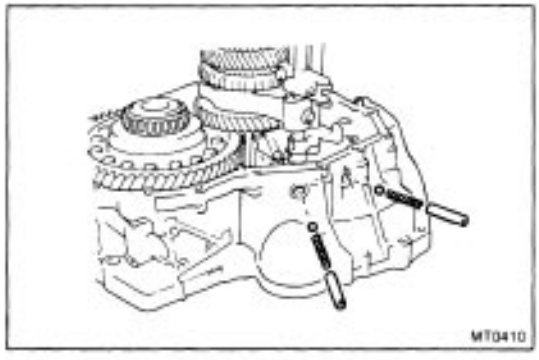

13. INSTALL LOCKING BALLS, SPRINGS, SPRING SEATS AND SCREW PLUGS

(a) Install the two locking balls, springs and spring seats.

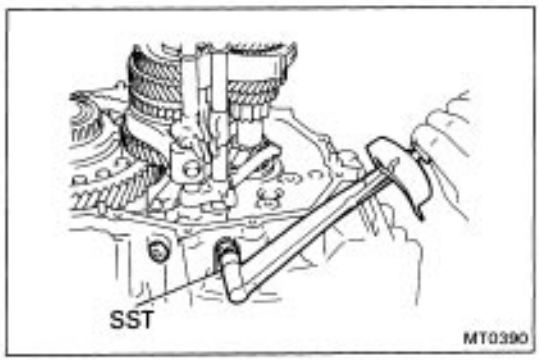

(b) Apply sealant to the two screw plugs.
Sealant: Part No. 08833–00080, THREE BOND 1344, LOCTITE 242 or equivalent
(c) Using SST, torque the two screw plugs.
SST 09313–30021
Torque: 250 kg–cm (18 ft–lb, 25 N–m)

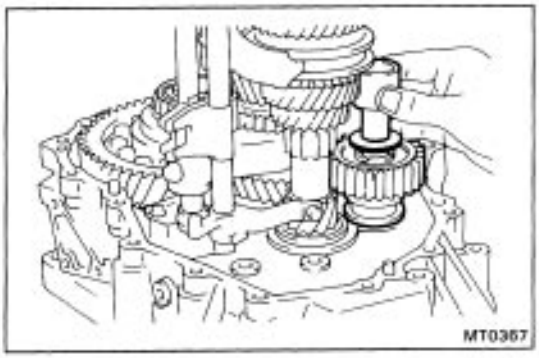

14. INSTALL REVERSE IDLER GEAR SHAFT, THRUST WASHER AND GEAR
(a) Install the reverse idler gear shaft with gear and thrust washer to the case.

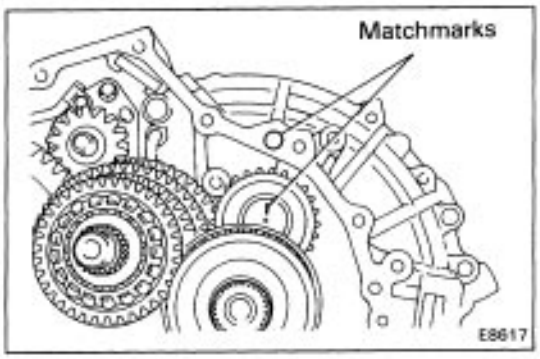

(b) Alight the matchmarks, as shown in the illustration.

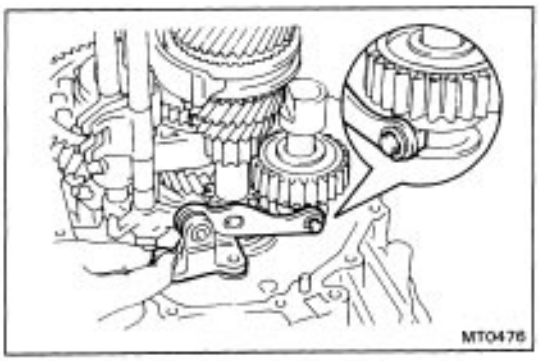

15. INSTALL REVERSE SHIFT ARM BRACKET ASSEMBLY AND NO. 2 OIL PIPE
(a) Put the reverse shift fork pivot into the reverse shift arm and install the reverse shift arm bracket to the transaxle case.
(b) Temporarily install the bolt.

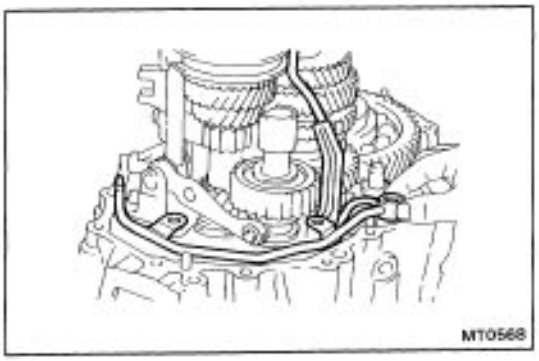

(c) Install the No. 2 oil pipe.

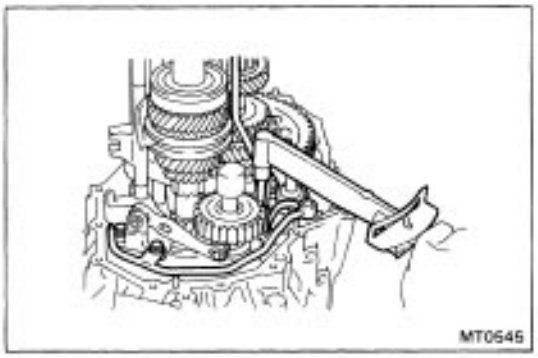

(d) Torque the two oil pipe bolts and reverse shift arm bracket bolt.

Torque: 175 kg–cm (13 ft–lb, 17 N–m)

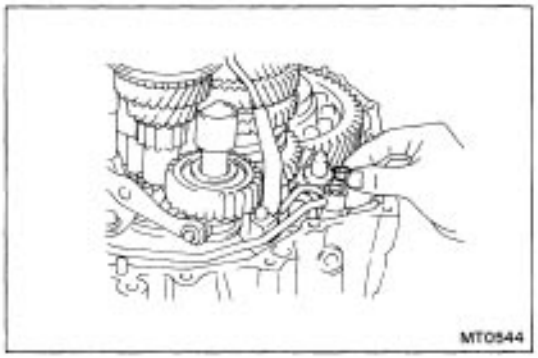

(e) Install a new gasket to the oil pipe.

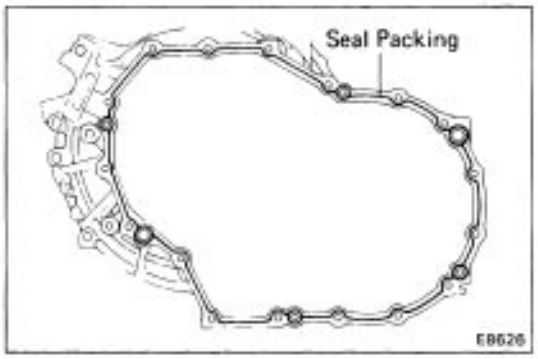

16. INSTALL TRANSMISSION CASE

(a) Remove any packing material and be careful not to drop oil on the contacting surfaces of the transaxle case.

(b) Apply seal packing to the transmission case as shown in the figure.

Seal packing: Part No. 08826–00090, THREE BOND 1281 or equivalent

HINT: Install the transmission case as soon as the seal packing is applied.

(c) Install and torque the seventeen bolts.

Transmission case side: Fourteen bolts

Transaxle case side: Three bolts

Torque: 300 kg–cm (22 ft–lb, 29 N–m)



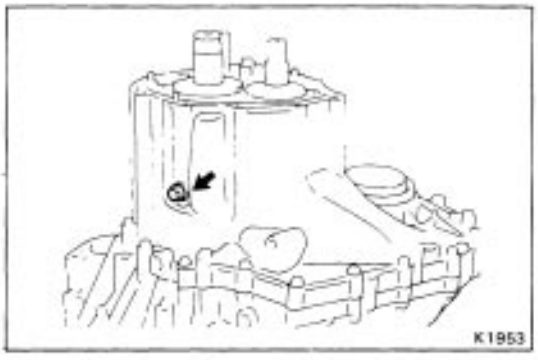

17. INSTALL AND TORQUE REVERSE IDLER GEAR RETAINING BOLT WITH GASKET

Torque: 300 kg–cm (22 ft–lb, 29 N–m)

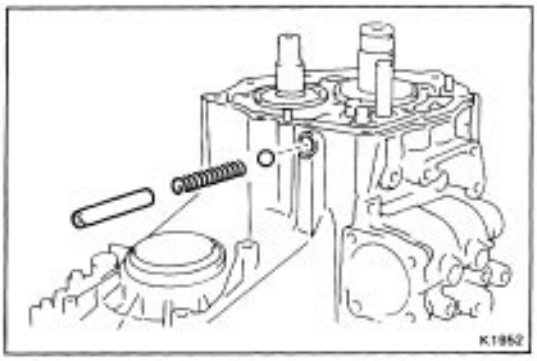

18. INSTALL LOCKING BALL, SPRING, SPRING SEAT AND SCREW PLUG

a) Install the locking ball, spring and spring seat.

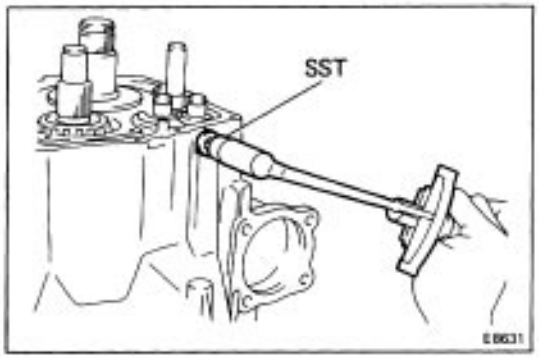

(b) Apply sealant to the screw plug.

Sealant: Part No. 08833–00080, THREE BOND 1344, LOCTITE 242 or equivalent

(c) Using SST, torque the screw plug.

SST 09313–30021

Torque: 250 kg–cm (18 ft–lb, 25 N–m)

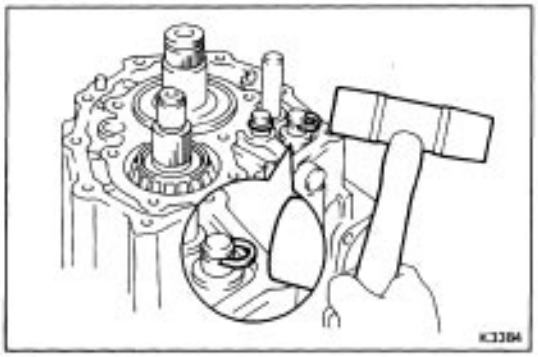

19. INSTALL SNAP RINGS

Using a plastic hammer, install the two snap rings to the shift fork shafts.

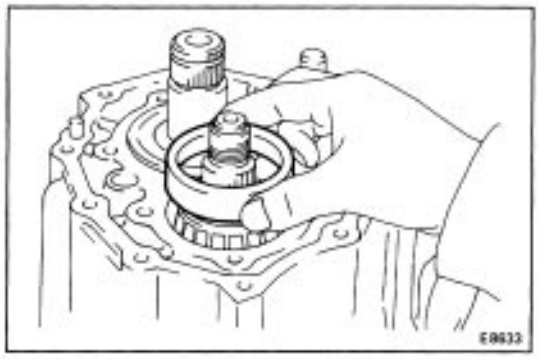

20. INSTALL REAR BEARING RETAINER

(a) Install the output shaft rear bearing outer race.

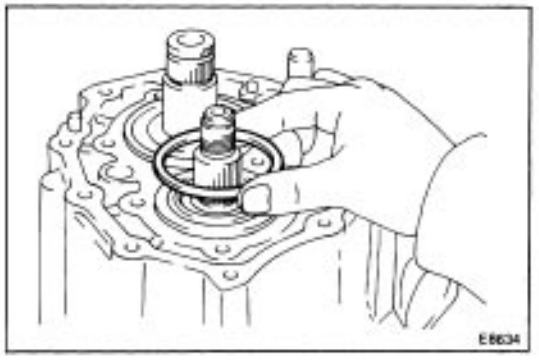

(b) Install the adjust shim which is already finished output shaft preload.

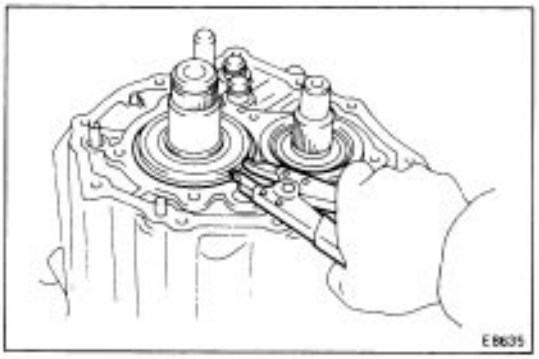

(c) Using snap ring pliers, install the snap ring to the input shaft rear bearing.

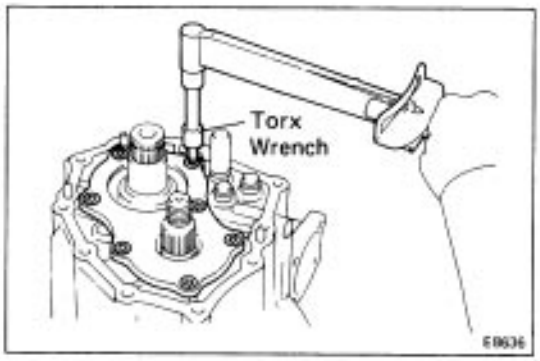

(d) Apply sealant to the seven screws.
Sealant: Part No. 08833–00070, THREE BOND 1324, LOCTITE 242 or equivalent
(e) Using a tor–x wrench, torque the seven screws.
(Torx socket wrench T45 09042–00050)
Torque: 430 kg–cm (31 ft–lb, 42 N–m)

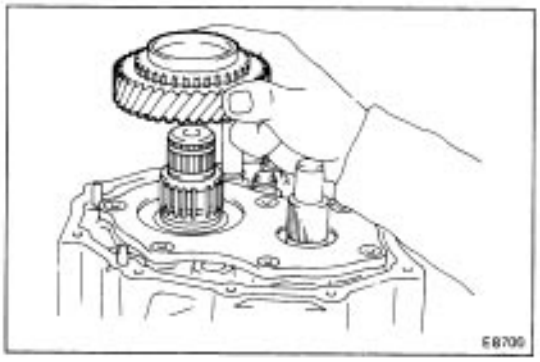

21. INSTALL FIFTH GEAR AND No.3 CLUTCH HUB
(a) Install the spacer, needle roller bearings and 5th gear.

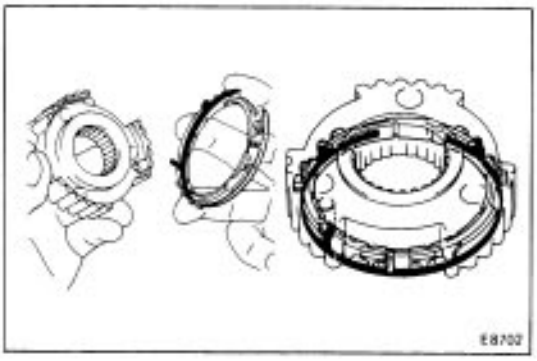

(b) Install the synchronizer ring and key spring to the No. 3 clutch hub.

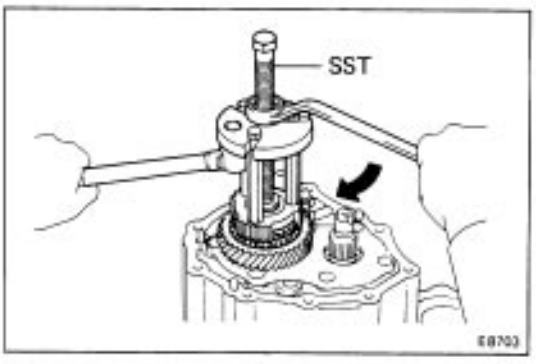

(c) Using SST, install the No. 3 clutch hub with synchronizer ring and key spring.
SST 09310–17010 (09310–07010, 09310–07020, 09310–07030)

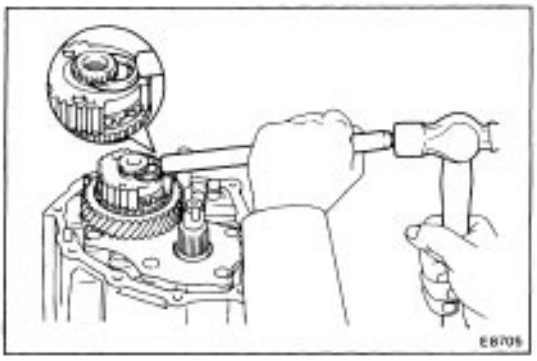

(d) Select a snap ring that will allow minimum axial play and install it on the shaft.

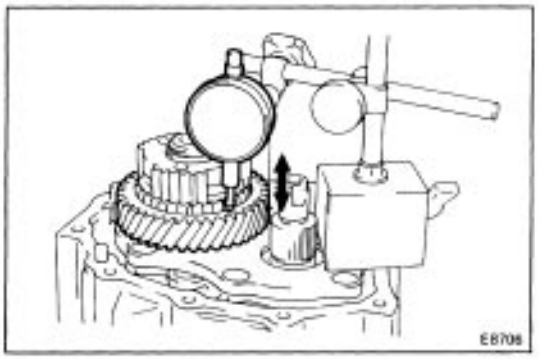

(e) Using a dial indicator, measure the 5th gear thrust clearance.

Standard clearance: 0.10 – 0.57 mm (0.0039 – 0.0224 in.)

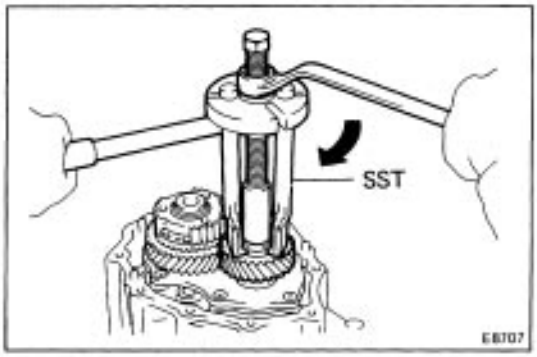

22. INSTALL FIFTH DRIVEN GEAR

Using SST, install the 5th driven gear.

SST 09310–17010 (09310–07010, 09310–07020 09310–07040, 09310–07050)

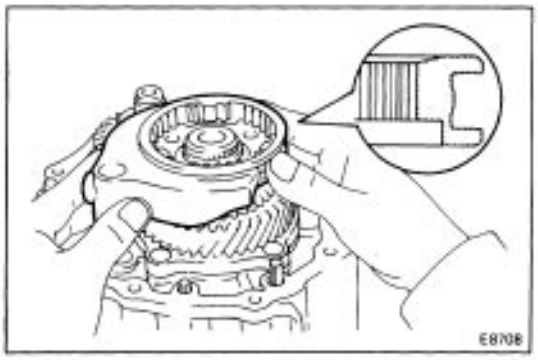

23. INSTALL NO. 3 HUB SLEEVE AND NO. 3 SHIFT FORK

(a) Install the No. 3 hub sleeve and No. 3 shift fork.

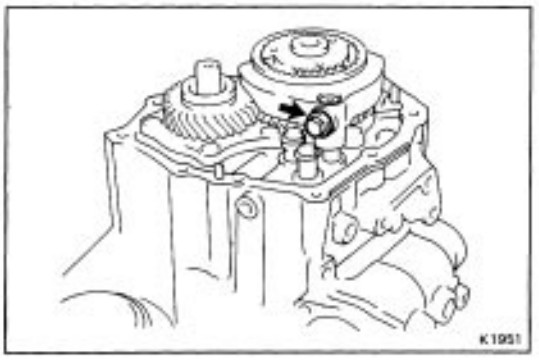

(b) Install and torque the set bolt.

Torque: 240 kg–cm (17 ft–lb, 24 N–m)

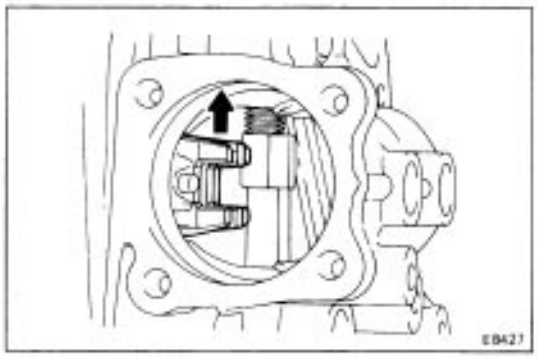

24. INSTALL LOCK NUT

(a) Engage the gear– double meshing.

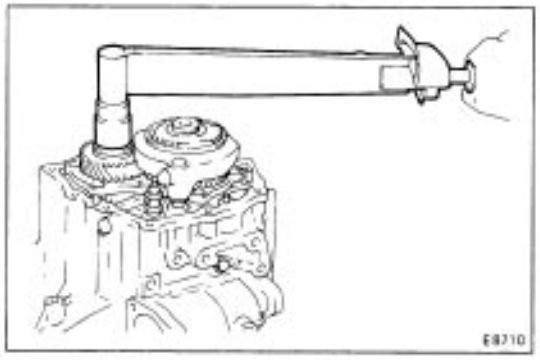

(b) Install and torque a new lock nut.

Torque: 1,250 kg–cm (90 ft–lb, 123 N–m)

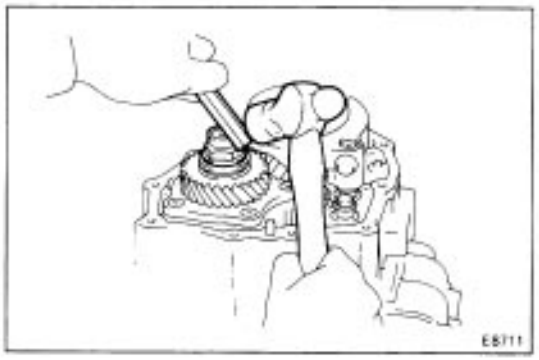

(c) Stake the lock nut.

(d) Disengage the gear double meshing.

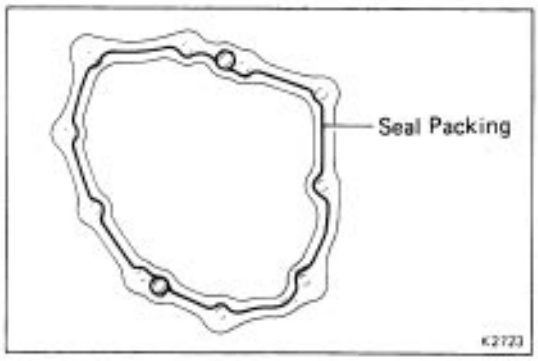

25. INSTALL TRANSMISSION CASE COVER

(a) Remove any packing material and be careful not to drop oil on the contacting surfaces of the transmission case cover.

(b) Apply seal packing to the transmission case as shown in the figure.

Seal packing: Part No. 08826–00090, THREE BOND 1281 or equivalent

HINT: Install the transmission case cover as soon as the seal packing is applied.

(c) Install and torque the ten bolts.

Torque: 300 kg–cm (22 ft–lb, 29 N–m)

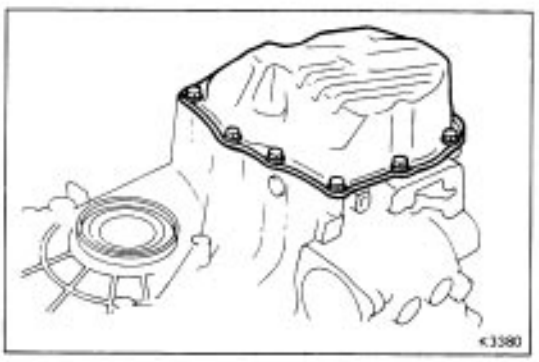

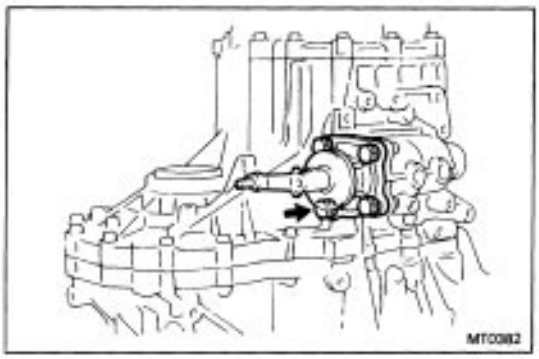

26. INSTALL SHIFT AND SELECT LEVER SHAFT ASSEMBLY

(a) Install the shift and select lever shaft assembly and new gasket.

(b) Apply sealant to the bolt threads.

Sealant: Part No. 08833–00080, THREE BOND 1344, LOCTITE 242 or equivalent

(c) Install and torque the four bolts.

Torque: 200 kg–cm (14 ft–lb, 20 N–m)

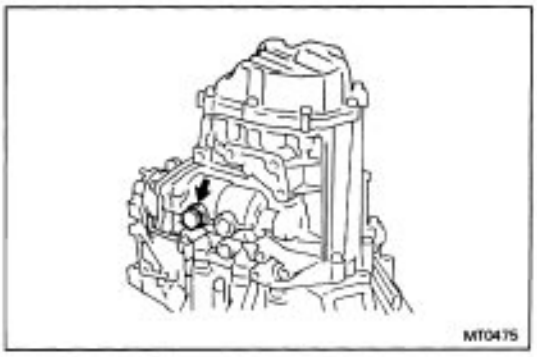

(d) Install and torque the lock bolt with the new gasket.

Torque: 500 kg–cm (36 ft–lb, 49 N–m)

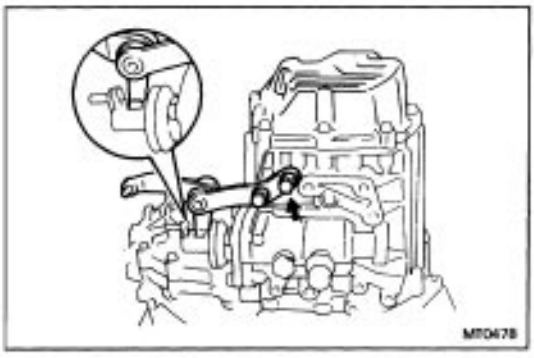

27. INSTALL NO. 2 SELECTING BELLCRANK WITH SELECTING BELLCRANK SUPPORT

(a) Apply sealant to the bolt threads.

Sealant: Part No. 08833–00080, THREE BOND 1344, LOCTITE 242 or equivalent

(b) Install and torque the two bolts.

Torque: 200 kg–cm (14 ft–lb, 20 N–m)

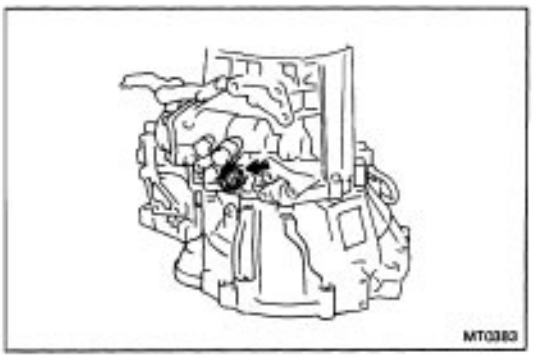

28. INSTALL BACK–UP LIGHT SWITCH

Install and torque the back–up light switch with the new gasket.

Torque: 410 kg–cm (30 ft–lb, 40 Nm)

29. INSTALL SPEEDOMETER DRIVEN GEAR

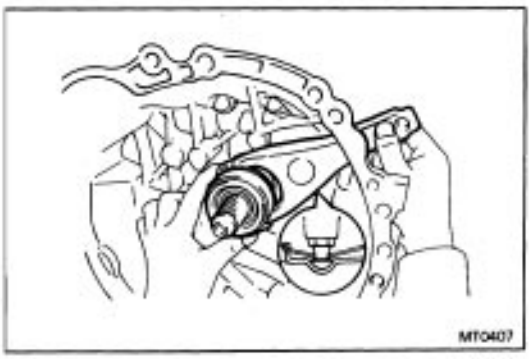

30. INSTALL RELEASE FORK AND BEARING

Apply molybdenum disulphide lithium base grease to the following part:

- Release fork contact surface
- Input shaft spline

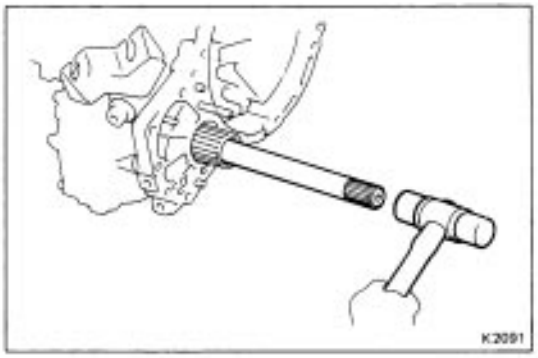

31. INSTALL DIFFERENTIAL SIDE GEAR INTERMEDIATE SHAFT

(a) Apply M P grease to the intermediate shaft.

(b) Using a plastic hammer, correctly drive the intermediate shaft straight until the top of it touches the differential pinion shaft.

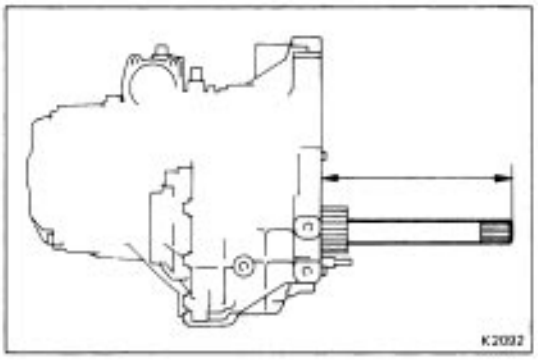

HINT: Keeping the intermediate shaft on the pinion shaft of differential, measure the point in the illustration.

Protrusion length: 255.0 mm (10.039 in.)

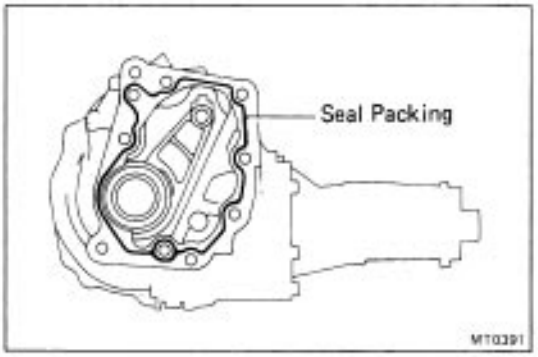

32. INSTALL TRANSFER ASSEMBLY

(a) Remove any packing material and be careful not to drop oil on the contacting surfaces of the transfer or transaxle.

(b) Apply seal packing to the transfer as shown in the figure.

Seal packing: Part No. 08826–00090, THREE BOND 1281 or equivalent

HINT: Install the transfer as soon as the seal packing is applied.

(c) Install the transfer assembly to the transaxle assembly.

HINT: Shift into 4th gear, install the transfer assembly while turning the input shaft of the transaxle.

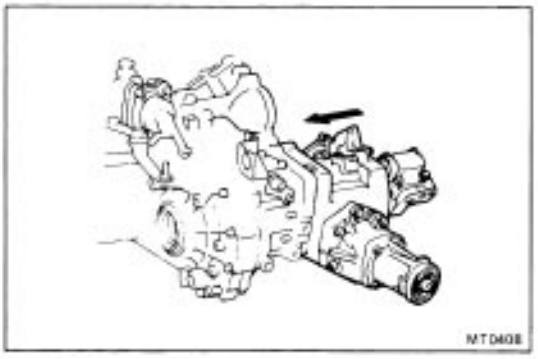

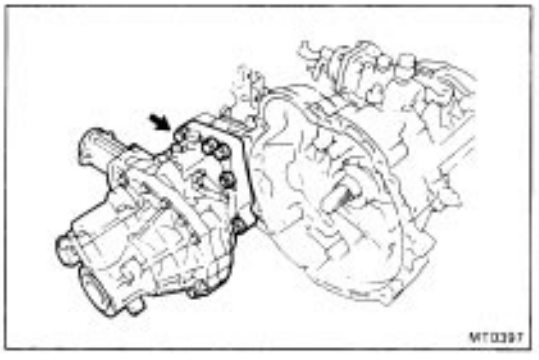

(d) Apply sealant to the bolt threads.

Sealant: Part No. 08833–00080, THREE BOND 1344, LOCTITE 242 or equivalent

(e) Install and torque the three bolts and five nuts.

Torque: 700 kg–cm (51 ft–lb, 69 N–m)

SHIFT LEVER AND CONTROL CABLE

COMPONENT

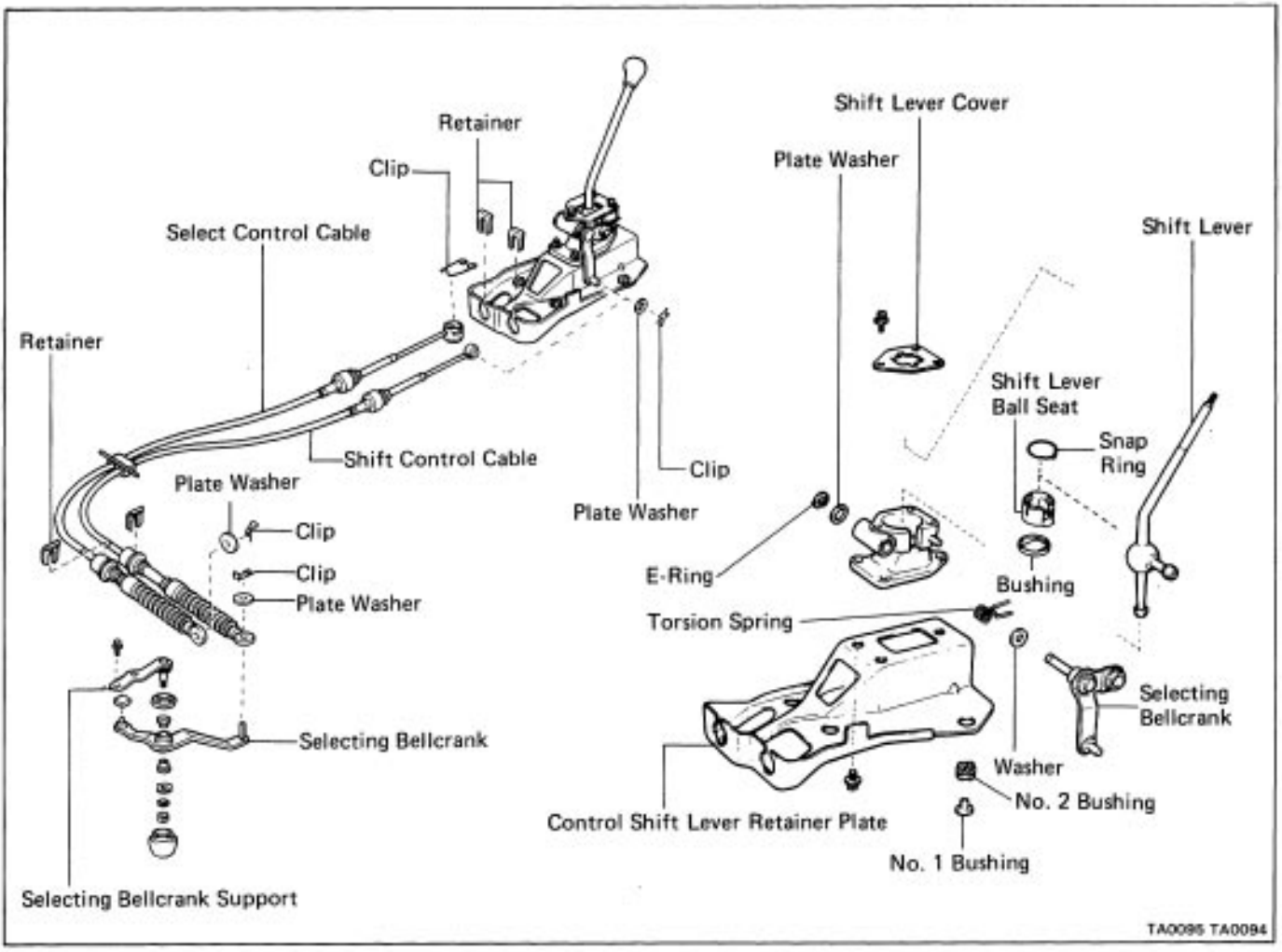

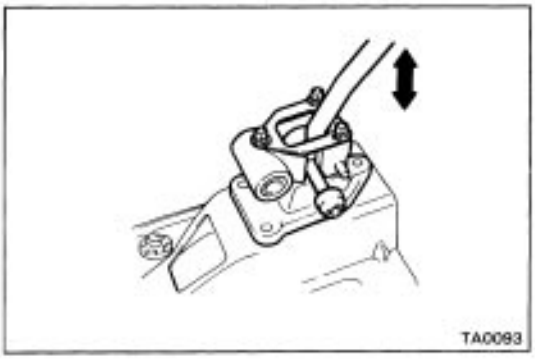

INSPECTION OF SHIFT LEVER

INSPECT SHIFT LEVER PLAY

Check that the shift lever vertical play.

Maximum play: 0.15 mm (0.0059 in.)

If the play is greater than maximum, replace the bushing.

PROPELLER SHAFT

PRECAUTION

Be careful not to grip the propeller shaft tube too tightly in the vise as this will cause deformation.

TROUBLESHOOTING

Problem	Possible cause	Remedy	Page
Noise	Sleeve yoke spline worn	Replace sleeve yoke	PR–4
	Center support bearing worn	Replace center support bearing	PR–4
	Spider bearing worn or stuck	Replace propeller shafts	PR–4
Vibration	Propeller and intermediate shafts runout	Replace shafts	PR–4
	Propeller shafts imbalance	Balance propeller shafts	
	Front flange runout	Replace front flange	PR–7
	Rear flange runout	Replace rear flange	PR–6
	Cross groove joint stuck or damaged	Replace rear propeller shafts	PR–4
	Transfer extension housing rear bushing worn		
	Sleeve– yoke spline stuck		
		Replace sleeve yoke	PR–4

PROPELLER SHAFT

COMPONENTS

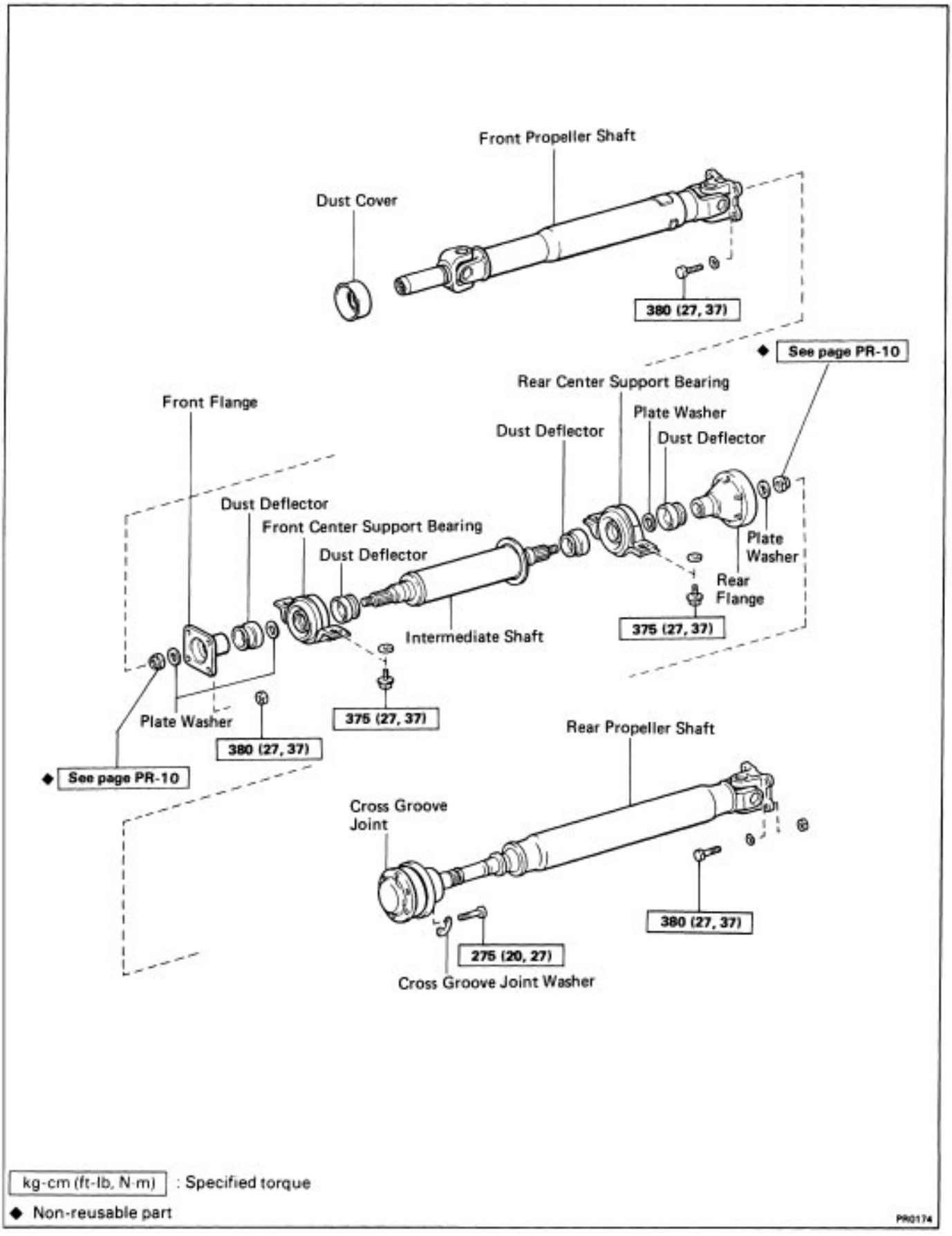

REMOVAL OF PROPELLER SHAFT

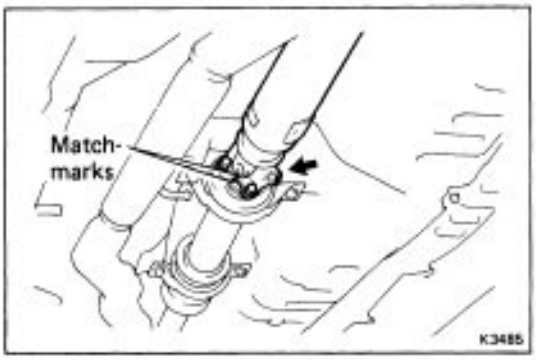

1. DISCONNECT FRONT PROPELLER SHAFT

(a) Place the matchmarks on the both flanges.

(b) Remove the four bolts, washers and nuts.

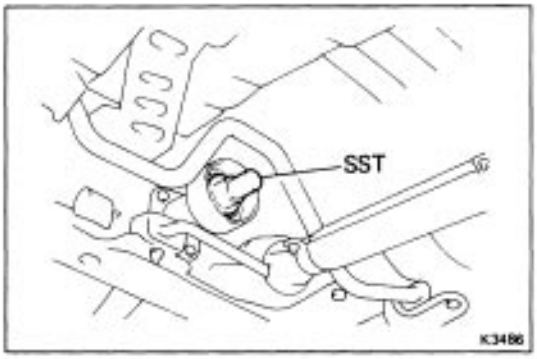

(c) Pull the yoke from the transfer.

(d) Insert SST in the transfer to prevent oil leakage.
SST 09325–20010

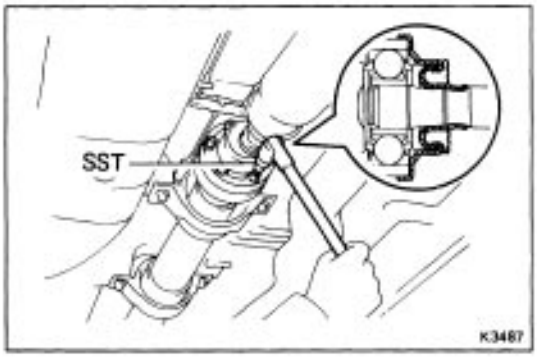

2. LOOSEN CROSS GROOVE JOINT SET BOLT

(a) Depress the brake pedal and hold it.

(b) Using SST, loosen the cross groove joint set bolts 1/2 turn.
SST 09313–30021
HINT: Put a piece of cloth or an equivalent into the inside of the universal joint cover.

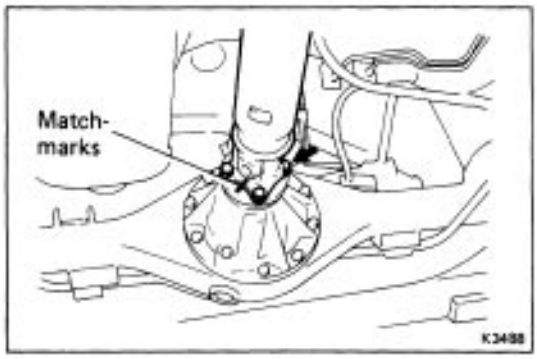

3. REMOVE INTERMEDIATE SHAFT AND REAR PROPELLER SHAFT

(a) Place the matchmarks on the both flanges.

(b) Remove the bolts, nuts and washers.

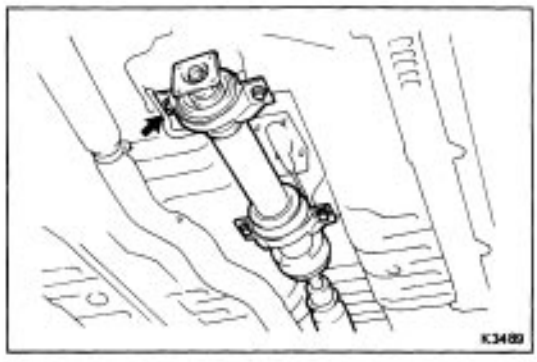

(c) Remove the two bolts, front center support bearing and washers.

(d) Remove rear center support bearing and washers.

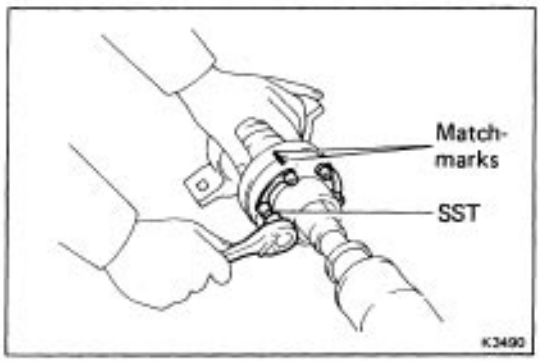

4. SEPARATE INTERMEDIATE SHAFT AND REAR PROPELLER SHAFT

(a) Place the matchmarks on the joint and flange.

HINT: Do not place the matchmarks with a punch.

(b) Using SST, remove the six bolts and three washers. Then separate intermediate shaft and rear propeller shaft.

SST 09313–30021

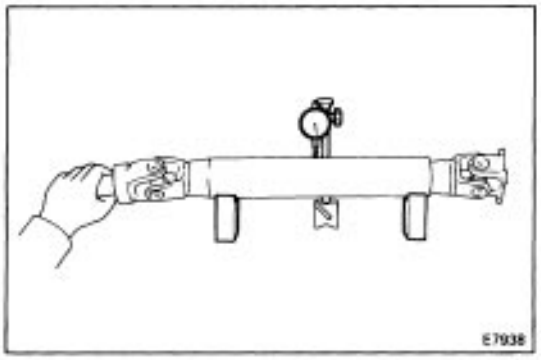

INSPECTION OF PROPELLER SHAFT

1. INSPECT PROPELLER AND INTERMEDIATE SHAFTS RUNOUT

If shaft runout is greater than maximum, replace the shaft.

Maximum runout: 0.8 mm (0.031 in.)

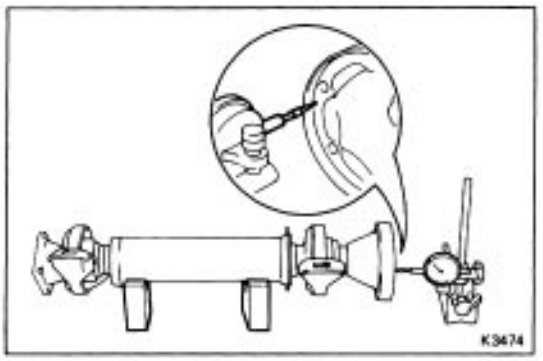

2. INSPECT INTERMEDIATE SHAFT FLANGE RUNOUT

(a) Inspect the front side of intermediate shaft flange runout.

Maximum runout: 0.1 mm (0.004 in.)

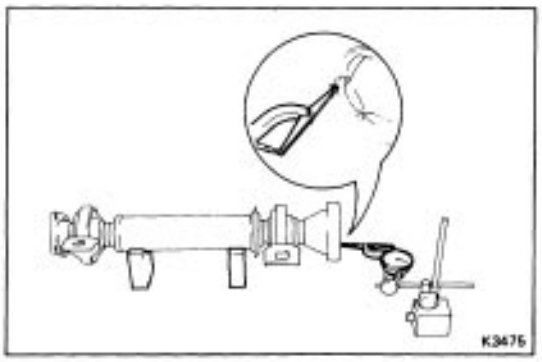

(b) Inspect the rear side of intermediate shaft flange runout in vertical direction.

Maximum runout: 0.1 mm (0.004 in.)

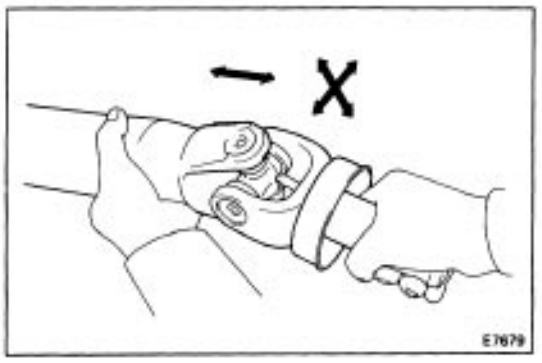

3. INSPECT SPIDER BEARINGS

Check the spider bearing axial play by turning the flange while holding the shaft tightly.

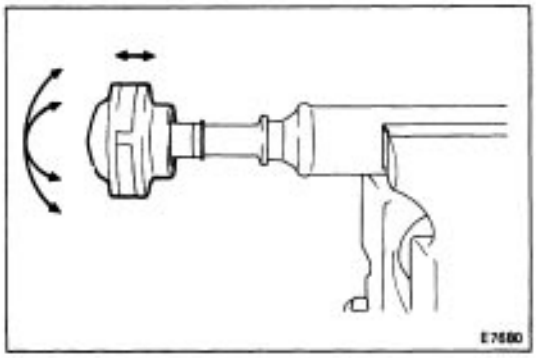

4. INSPECT CROSS GROOVE JOINT

Check the joint smooth play by turning the joint in directions as shown. And check the crack or damage or grease leakage of boot. If problem is found, replace the rear propeller shaft.

HINT: The cross groove joint is the non–disassembling type.

DISASSEMBLY OF PROPELLER SHAFT

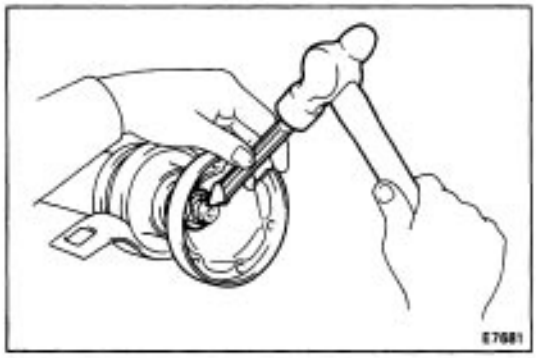

1. REMOVE REAR CENTER SUPPORT BEARING

(a) Using a hammer and chisel, loosen the staked part of the nut.

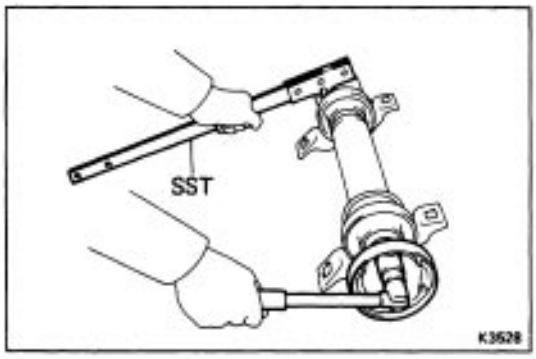

(b) Using SST to hold the front flange, remove the nut and plate washer.

SST 09330–00021

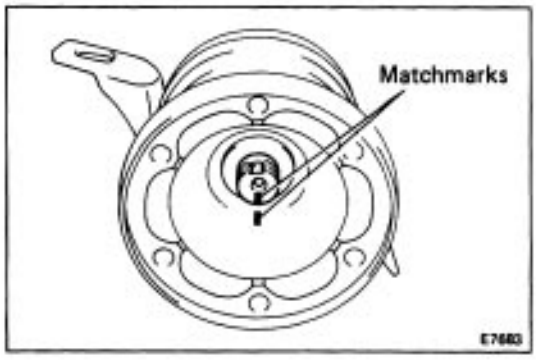

(c) Place the matchmarks on the rear flange and shaft.

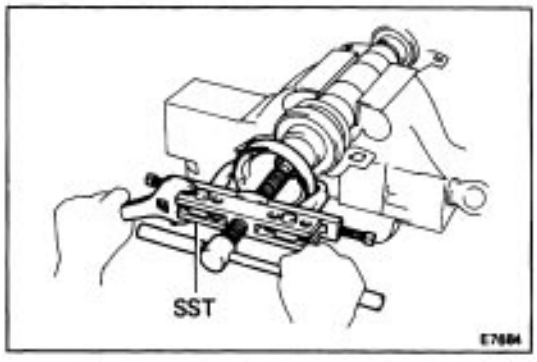

(d) Using SST, remove the rear flange.

SST 09950–20017

(e) Remove the rear center support bearing and plate washer.

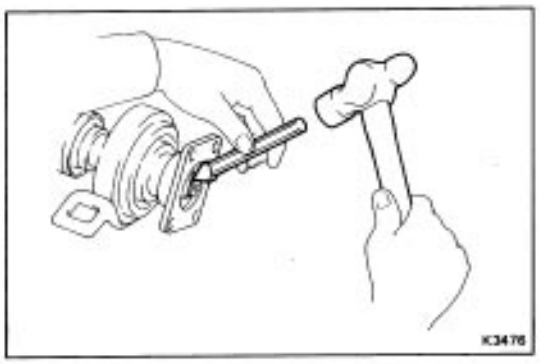

2. REMOVE FRONT CENTER SUPPORT BEARING

(a) Using a hammer and chisel, loosen the staked part of the nut.

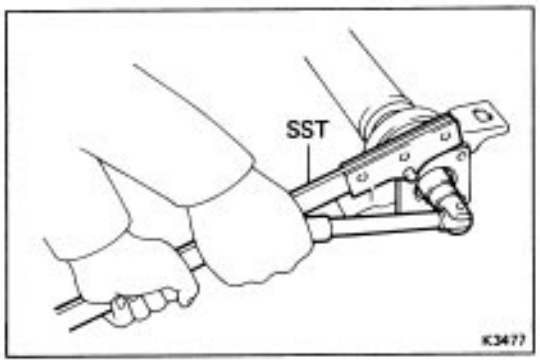

(b) Using SST to hold the flange, remove the nut and plate washer.
SST 09330–00021

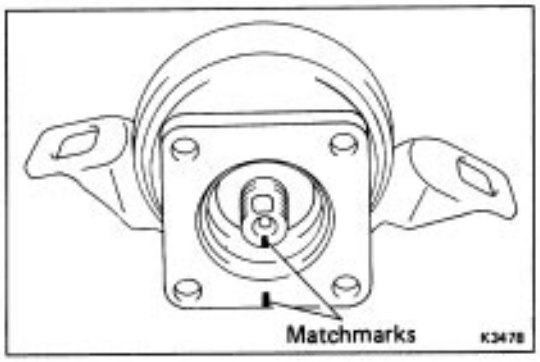

(c) Place the matchmarks on the flange and the shaft.

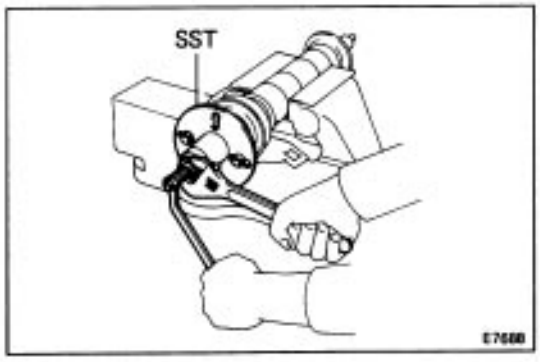

(d) Using SST, remove the flange.
SST 09557–22022 (09557–22050)

(e) Remove the front center support bearing and plate washer.

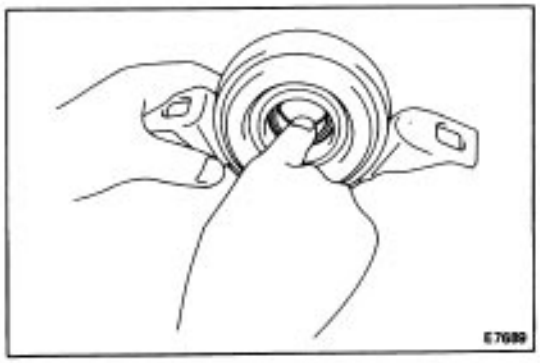

3. INSPECT CENTER SUPPORT BEARING

(a) Turning the bearing by hand while applying force in the rotation direction. Check the bearing smooth play.

(b) Check that there are no cracks and no damages about both seals.

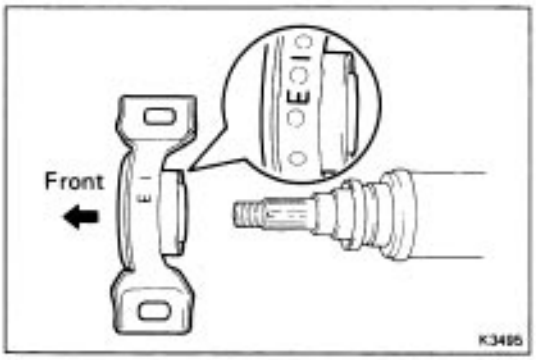

ASSEMBLY OF PROPELLER SHAFT

1. INSTALL FRONT CENTER SUPPORT BEARING

(a) Set the front center support bearing on the intermediate shaft as shown.

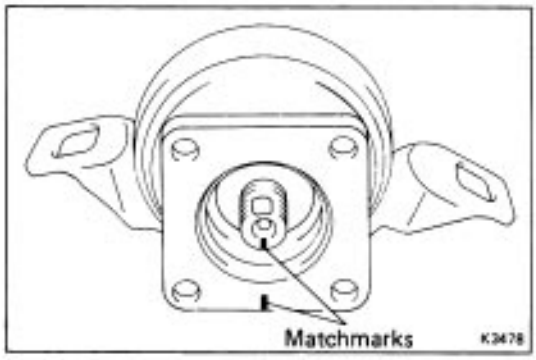

(b) Install the plate washer– to the intermediate shaft.

(c) Align the matchmarks on the flange and shaft and install the flange on the shaft.

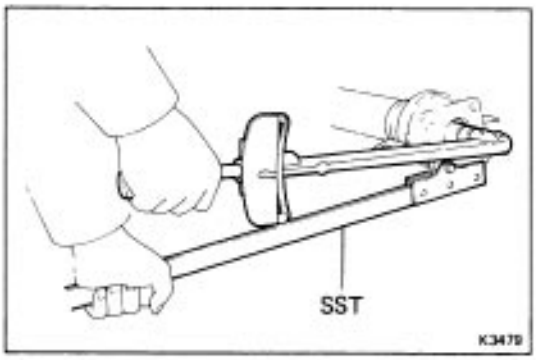

(d) Using SST to hold the flange, press the bearing into position by tightening down a new nut and washer.
SST 09330–00021

Torque: 1,850 kg–cm (134 ft–lb, 181 N–m)

(e) Loosen the nut.

(f) Torque the nut again.

Torque: 700 kg–cm (51 ft–lb, 69 N–m)

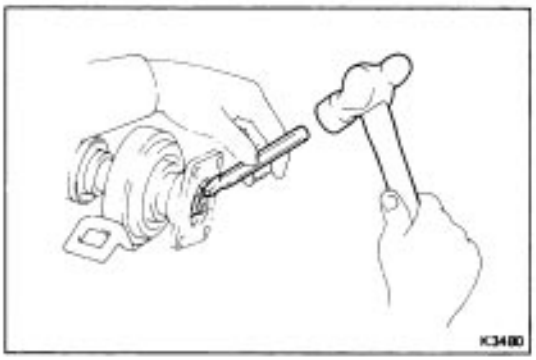

Using a hammer and chisel, stake the nut.

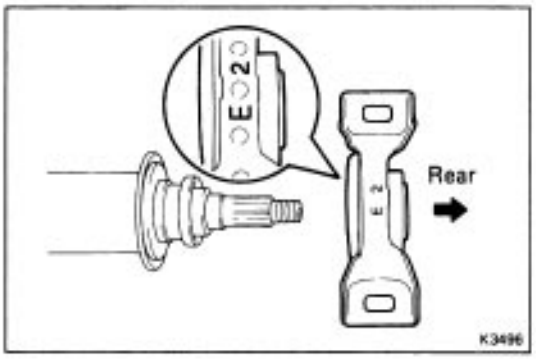

2. INSTALL REAR CENTER SUPPORT BEARING

(a) Set the rear center support bearing on the intermediate shaft as shown.

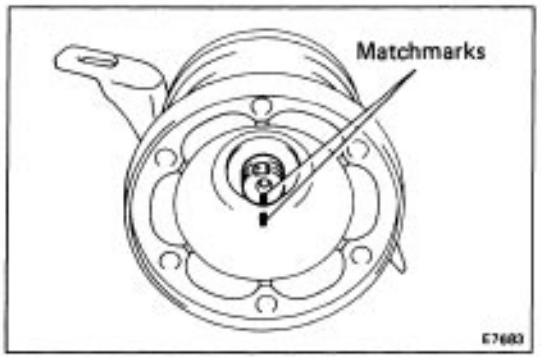

(b) Install the plate washer to the intermediate shaft.
(c) Align the matchmarks on the flange and shaft and place the flange on the shaft.

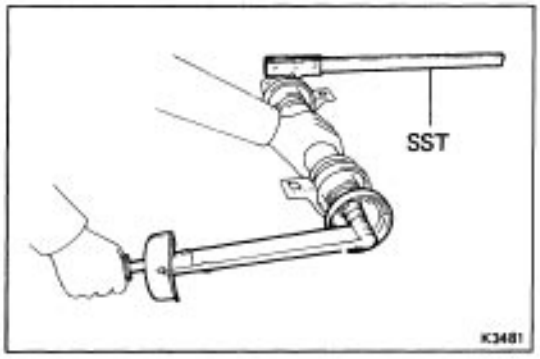

(d) Using SST to hold the flange, press the bearing into position by tightening down a new nut and washer.
SST 09330–00021
Torque: 1,850 kg–cm (134 ft–lb, 181 N–m)
(e) Loosen the nut.
(f) Torque the nut again.
Torque: 700 kg–cm (51 ft–lb, 69 N–m)

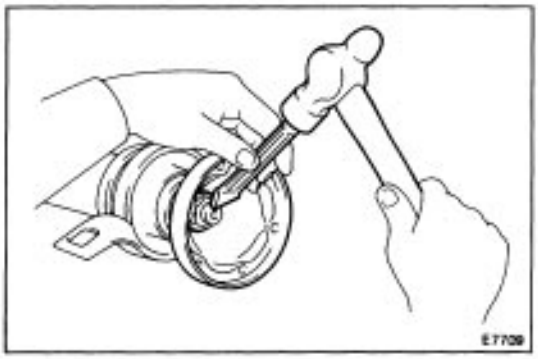

Using a hammer and chisel, stake the nut.

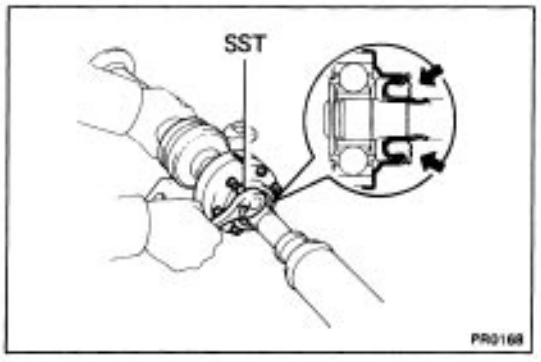

3. INSPECT CROSS GROOVE JOINT
(See step 4 on page PR–6)

4. CONNECT INTERMEDIATE SHAFT WITH REAR PROPELLER SHAFT

Using SST, tighten the six bolts and three washers temporarily.
SST 09313–30021
HINT: Put a piece of cloth or an equivalent into the inside of the universal joint cover.

INSTALLATION OF PROPELLER SHAFT

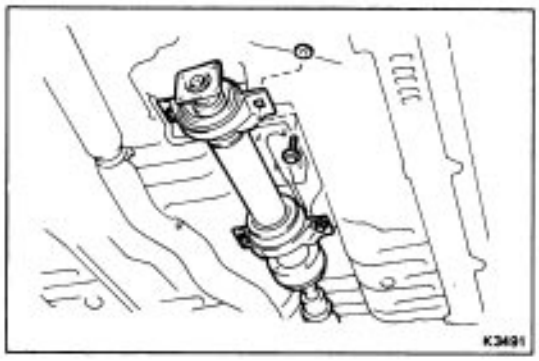

1. INSTALL CENTER SUPPORT BEARING TEMPORARILY

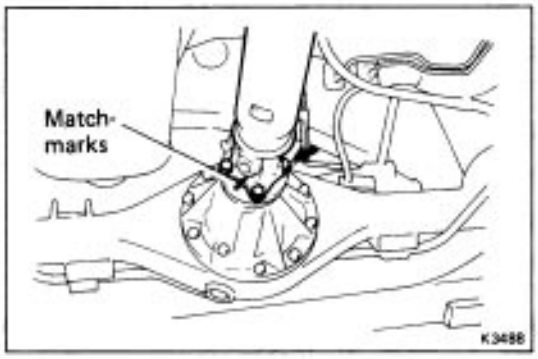

2. INSTALL REAR PROPELLER SHAFT

(a) Align the matchmarks on the flanges and connect the shaft with the four– bolts, washers and nuts.

(b) Torque the bolts and nuts.

Torque: 380 kg–cm (27 ft–lb, 37 N–m)

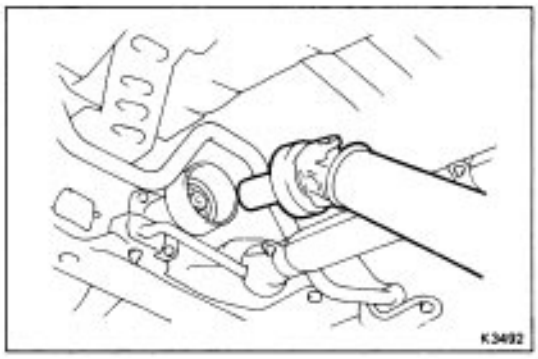

3. INSTALL FRONT PROPELLER SHAFT

(a) Remove SST from the transfer.
SST 09325–20010

(b) Insert the yoke into the transfer.

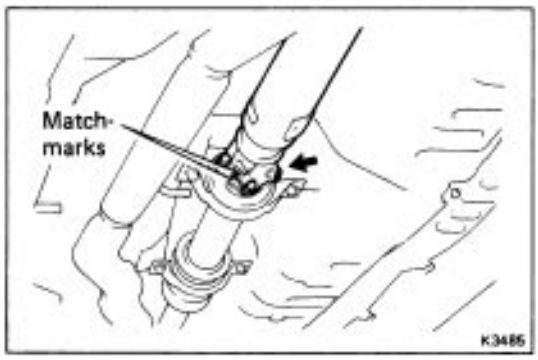

(c) Align the matchmarks on the both flanges, then install the bolts, washers and nuts.

Torque: 380 kg–cm (27 ft–lb, 37 N–m)

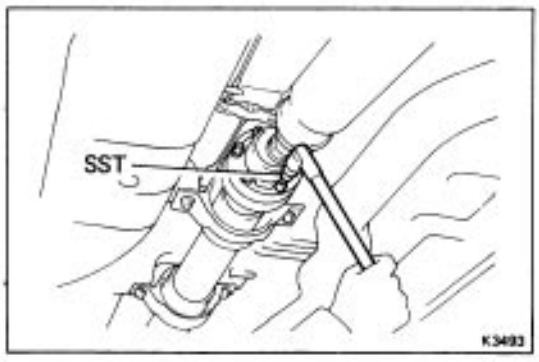

4. TIGHTEN CROSS GROOVE JOINT SET BOLT

(a) Depress the brake pedal and hold it.

(b) Using SST, tighten the cross groove joint set bolts.
SST 09313–30021

Torque: 275 kg–cm (20 ft–lb, 27 N–m)

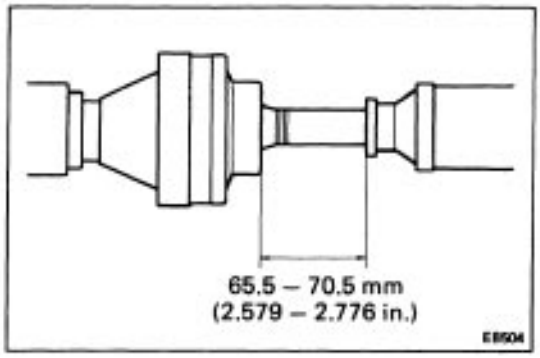

5. INSTALL CENTER SUPPORT BEARING

(a) With a vehicle unladen condition, adjust the intervals between the rear side of boot cover and the shaft as shown in the illustration.

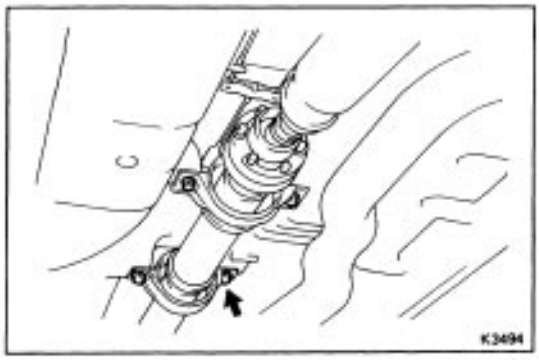

(b) With the same condition, adjust the intervals between the rear side of center bearing housing and the rear side of cushion at 11.5 – 13.5 mm (0.453 – 0.531 in.)
as shown in the illustration below, then torque the bolts.

Torque: 375 kg–cm (27 ft–lb, 37 N–m)

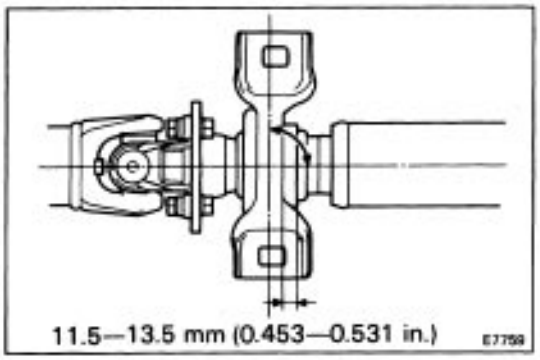

(c) Check that the center line of the bracket is at right angles at the shaft axial direction.

SUSPENSION AND AXLE

TROUBLESHOOTING

Problem	Possible cause	Remedy	Page	
			Front	Rear
Wanders/pulls	Tires worn or improperly inflated	Replace tire or inflate tires to proper pressure	SA–3	SA–3
	Wheel alignment incorrect	Check wheel alignment	SA–3	SA–3
	Wheel bearing worn	Replace wheel bearing	SA–7	SA–37, 56
	Front or rear suspension parts loose or broken	Tighten or replace suspension parts	A–23	SA–65
	Steering gear out of adjustment or broken	Adjust or repair steering gear	SR–17, 48	—
Bottoming	Vehicle overloaded	Check loading		
	Shock absorber worn out	Replace shock absorber	SA–29	SA–62
	Spring weak	Replace spring	SA–29	SA–62
Sways/pitches	Tires improperly inflated	Inflate tires to proper pressure	SA–3	SA–3
	Stabilizer bar bent or broken	Inspect stabilizer bar	SA–36	SA–69
	Shock absorber worn out	Replace shock absorber	SA–29	SA–62
Front wheel shimmy	Tires worn or improperly inflated	Replace tire or inflate tires to proper pressure	SA–3	—
	Wheels out of balance	Balance wheels		
	Shock absorber worn out	Replace shock absorber	SA–29	—
	Wheel alignment incorrect	Check front wheel alignment	SA–3	—
	Wheel bearings worn	Replace wheel bearings	SA–7	—
	Ball joints or bushings worn	Inspect ball joints and bushings	SA–32, 33	—
	Steering gear out of adjustment or broken	Adjust or repair steering gear	SR–17,48	—
Abnormal tire wear	Tires improperly inflated	Inflate tires to proper pressure	SA–3	SA–3
	Shock absorbers worn out	Replace shock absorber	SA–29	SA–62
	Wheel alignment incorrect	Check wheel alignment	SA–3	SA–3
	Suspension parts worn	Replace suspension parts	SA–28	SA–61, 65
Oil leak at rear axle	Oil seals worn or damaged	Replace oil seal	—	SA–37
	Bearing retainer loose	Replace retainer	—	SA–37
	Rear axle housing cracked	Repair as necessary		
Oil leak at drive pinion shaft	Oil level too high or wrong oil grade	Drain or replace oil		
		Replace oil seal		
	Oil seal worn or damaged	Tighten or replace flange	—	SA–41
	Companion flange loose or damaged		—	SA–41
Noises in rear axle	Oil level low or wrong oil seal	Refill or replace oil		
	Excessive backlash between drive pinion and ring or side gear	Check backlash	—	SA–41
	Ring, drive pinion or side gears worn or chipped	Inspect gears	—	SA–41
	Drive pinion shaft bearing worn	Replace bearing	—	SA–41
	Axle shaft bearing worn	Replace bearing	—	SA–41
	Differential bearing loose or worn	Tighten or replace bearing	—	SA–41

WHEEL ALIGNMENT

1. MAKE FOLLOWING CHECKS AND CORRECT ANY PROBLEMS

(a) Check the tires for wear, size and proper inflation.
Cold tire inflation pressure: See page A–45

(b) Check the wheel bearings for looseness.

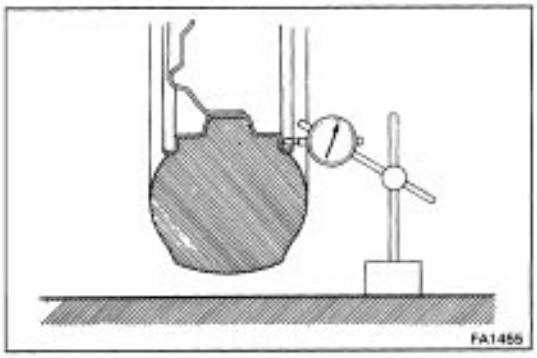

(c) Check the wheel runout.
Lateral runout: Less than 1.0 mm (0.039 in.)

(d) Check the suspension for looseness.

(e) Check that the absorbers function properly by using the standard bounce test.

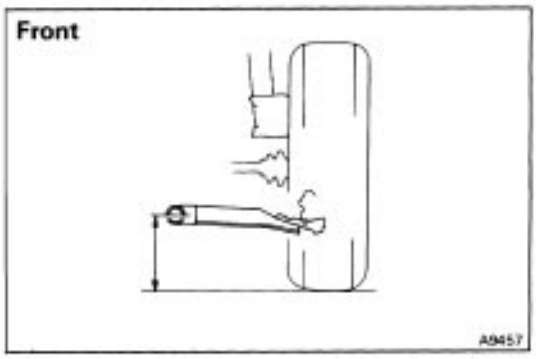

2. MEASURE CHASSIS GROUND CLEARANCE

Chassis ground clearance: See page A–45

If the clearance of the vehicle is not standard, try to adjust it by pushing down on the body or by lifting the body.
If still not correct, check for bad springs or suspension parts.
HINT: Before inspecting wheel alignment, adjust chassis ground clearance to specification.

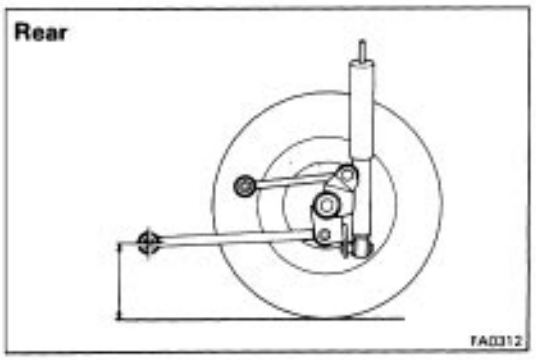

3. INSTALL WHEEL ALIGNMENT EQUIPMENT

Follow the specific instructions of the equipment manufacturer.

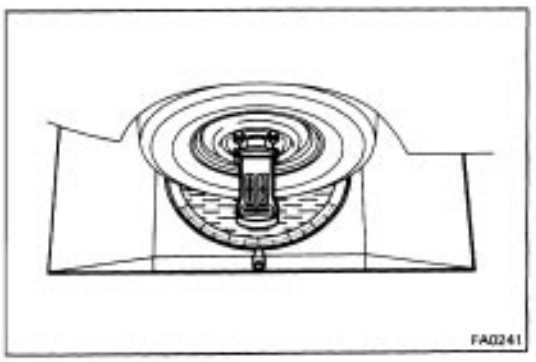

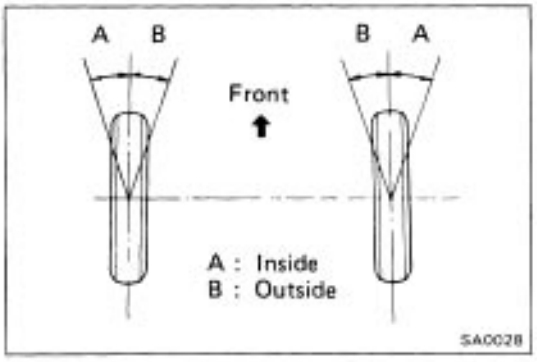

Front Wheel Alignment

1. CHECK WHEEL ANGLE

Wheel angle: See page A–45

If wheel angles differ from the standard specifications, check to see if the lengths of the left and right tie rods are the same.

HINT: If the tie rod lengths are not equal, the wheel angle cannot be adjusted properly.

If the tie rod lengths were changed to adjust the wheel angle, inspect the toe–in.

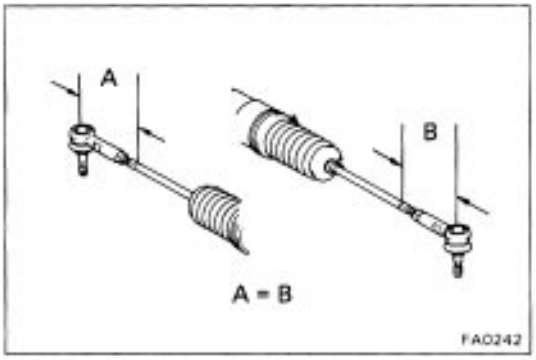

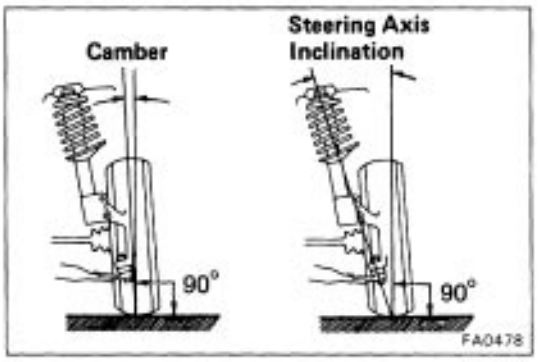

2. CHECK CAMBER, CASTER AND STEERING AXIS INCLINATION

Camber, Caster and Steering axis inclination:

See page A–45

HINT: Camber, caster and steering axis inclination is not adjustable. If measurement is not within specification, inspect and replace the suspension parts.

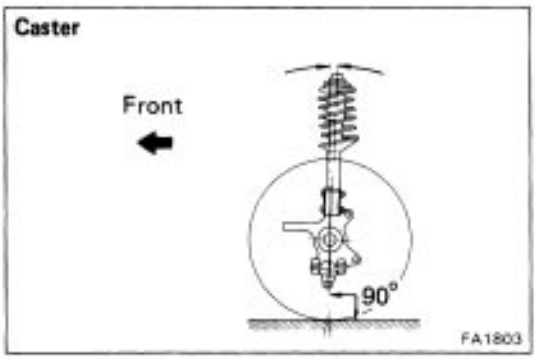

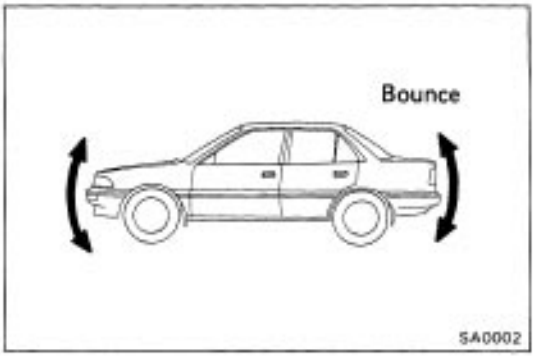

3. INSPECT TOE–IN

Measure toe–in with a toe–in gauge in the following procedure.

(a) Bounce the vehicle up and down to stabilize the suspension.

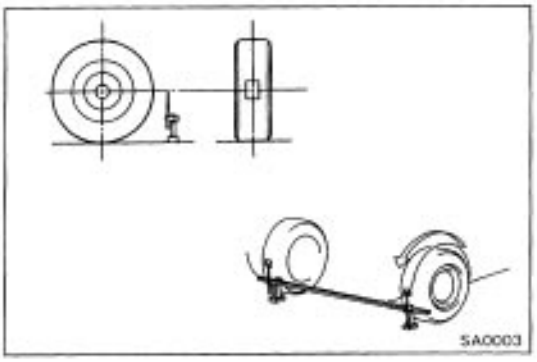

(b) Move the vehicle forward about 5 m 0 6.4 ft) with the front wheel in the straight–ahead position on a level place.

(c) Mark the center of each rear tread and measure the distance between the marks of the right and left tires.

(d) Advance the vehicle until the marks on the rear sides of the tires come to the measuring heights of the gauge on the front side.

HINT: If the tire rolls too far, repeat from step (b).

(e) Measure the distance between the marks on the front of the tires.

Inspection standard: 1 ± 2 mm (0.04 ± 0.08 in.)

If toe–in is not within specification adjust it.

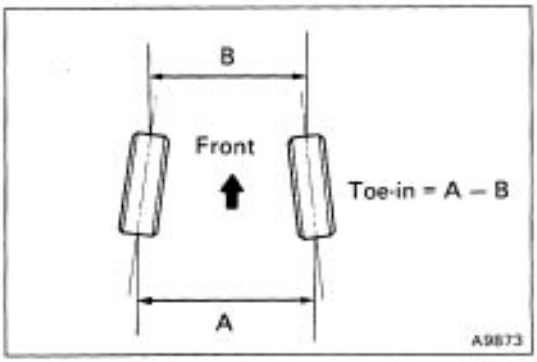

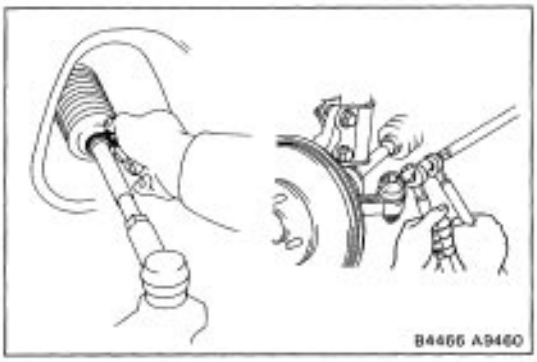

4. ADJUST TOE–IN

(a) Remove the boot clips.

(b) Loosen the tie rod end lock nut.

(c) Turn the left and right tie rod ends an equal amount to adjust the toe–in.

Adjustment standard: 1 ± 1 mm (0.04 ± 0.04 in.)

HINT: Insure that the lengths of the left and right tie rod ends length are the same.

Tie rod end length left–right error:

Less than 1.0 mm (0.039 in.)

(d) Torque the tie rod end lock nuts.

Torque: 570 kg–cm (41 ft–lb, 56 N–m)

(e) Place the boot on the seat and clamp it.

HINT: Insure that the boots are not twisted.

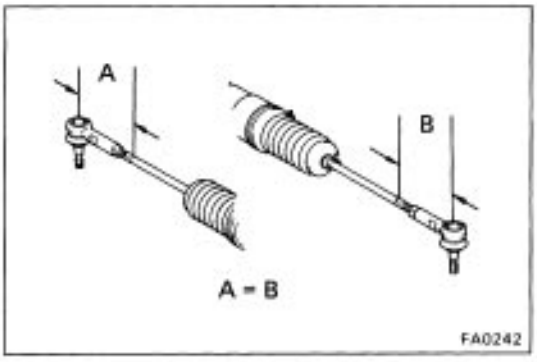

5. INSPECT SIDE SLIP (REFERENCE ONLY)

Side slip limit:

Less than 3.0 mm/m (0.118 in./3.3 ft)

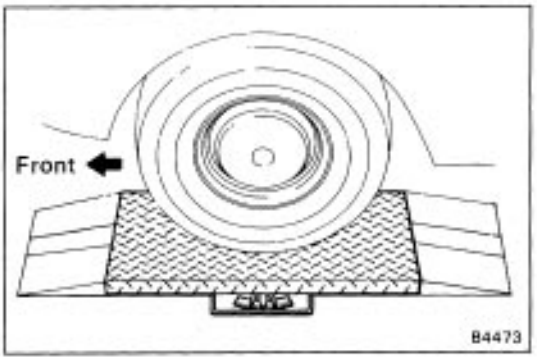

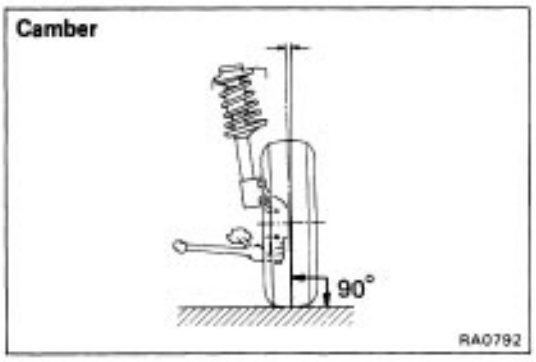

Rear Wheel Alignment (2WD)

1. CHECK CAMBER

Camber: See page A–46

Camber is not adjustable. If measurement is not within specification, inspect and replace the suspension parts as necessary.

2. INSPECT TOE–IN

(See page SA–4)

Toe–in: Inspection STD 4 ± 2 mm (0.16 ± 0.08 in.)

If toe–in is not within specification adjust it.

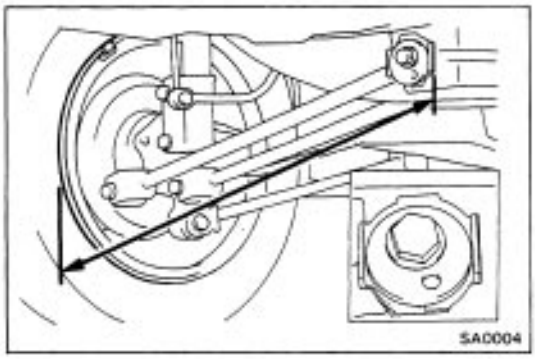

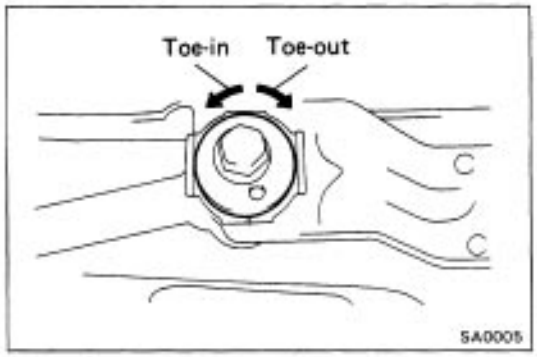

3. ADJUST TOE–IN

(a) Measure the distance between each wheel disc and corner of the cam bracket and confirm that both are the same.

Left–right error: Less than 3 mm (0.12 in.)

If the left–right error is greater than 3 mm (0.12 in.) adjust following the procedures below.

- If the toe–in is out of the standard toward toe–out side, lengthen the shorter arm by the cam.
- If the toe–in is out of the standard toward toe–in side, shorten the longer arm by the cam.

(b) Measure the toe–in.

Toe–in: Adjustment STD 4 ± 1 mm (0.16 ± 0.04 in.)

If the left–right error is within specifications but the overall toe–in is not, lengthen or shorten both arms an equal amount by turning the two cams in the opposite direction, until the adjustment standard is obtained.

HINT: The toe–in will change about 2.0 mm (0.08 in.) with each graduation of the cam (one side).

FRONT AXLE HUB

COMPONENTS

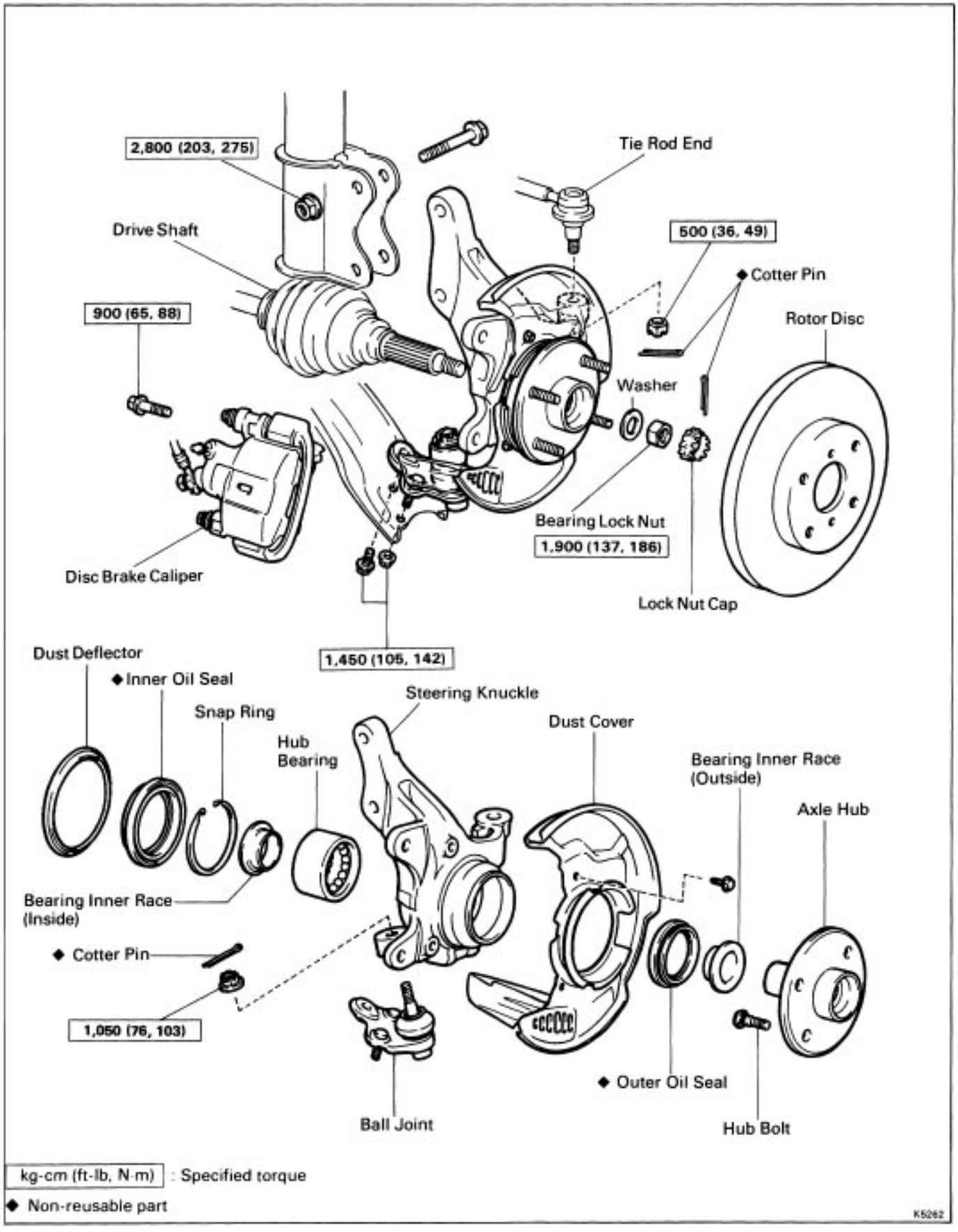

REMOVAL OF FRONT AXLE HUB

(See page SA–7)

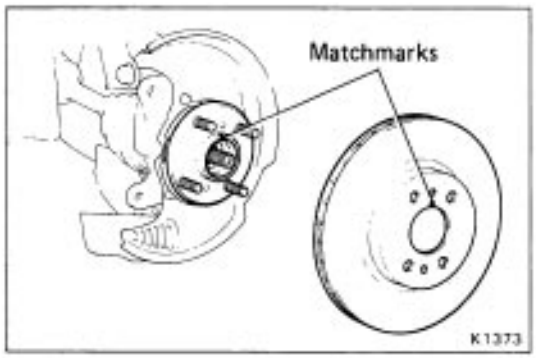

1. REMOVE BEARING LOCK NUT

(a) Remove the cotter pin and lock nut cap.

(b) Loosen the bearing lock nut while depressing the brake pedal, and remove it.

2. REMOVE BRAKE CALIPER AND ROTOR DISC

(a) Remove the brake caliper from the steering knuckle and suspend it with wire.

(b) Remove the rotor disc.

HINT: Before removing the rotor disc, place matchmarks on the axle hub and rotor disc.

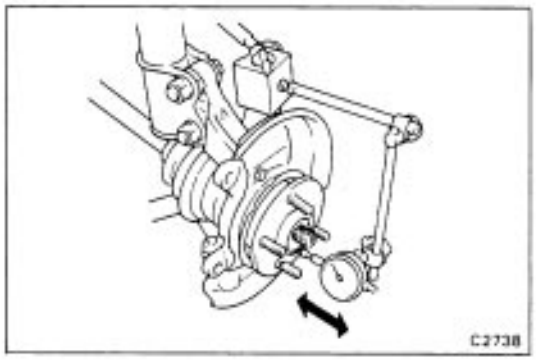

3. CHECK BEARING PLAY IN AXIAL DIRECTION

Bearing play: 0.05 mm (0.0020 in.) or less

If the bearing play is greater than the maximum, replace the bearing.

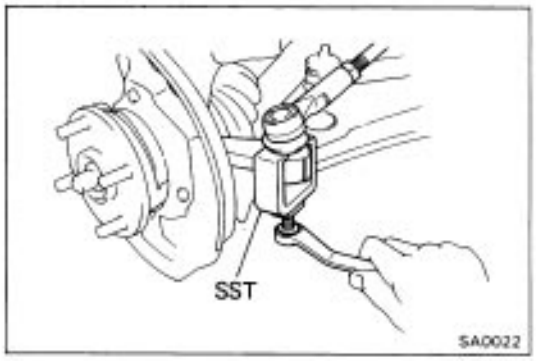

4. DISCONNECT TIE ROD END

(a) Remove the cotter pin and nut from the tie rod end.

(b) Using SST, disconnect the tie rod end from the steering knuckle.

SST 09611–22012

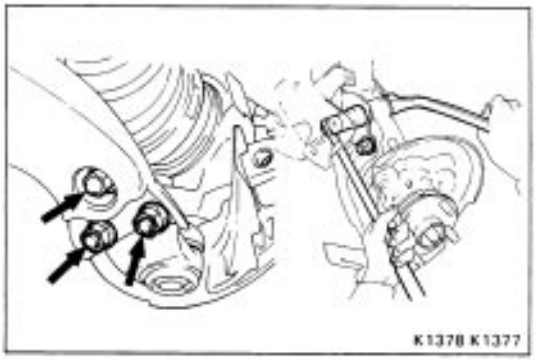

5. REMOVE AXLE HUB ASSEMBLY

(a) Remove the bolt and two nuts from the lower arm.

(b) Disconnect lower arm from the steering knuckle.

(c) Loosen and remove the two nuts from the steering knuckle.

HINT: Leave the hub bolts not to drop the axle hub assembly.

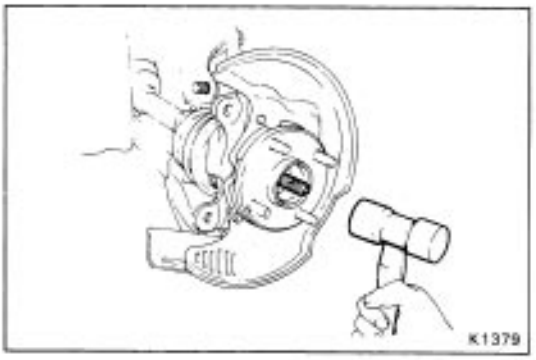

(d) Using a plastic hammer, tap the drive shaft.

NOTICE: Cover the drive shaft boot with cloth to protect it from damage.

(e) Remove the two bolts and remove the axle hub assembly.

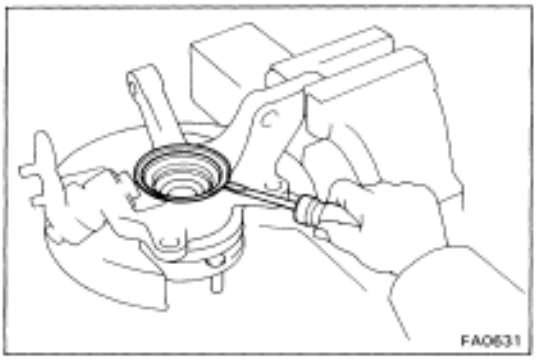

DISASSEMBLY OF FRONT AXLE HUB

(See page SA–7)

1. REMOVE DUST DEFLECTOR

(a) Clamp the steering knuckle in a vise.

HINT: Use a set of soft jaws in the vise to protect the steering knuckle.

(b) Using a screwdriver, remove the dust deflector.

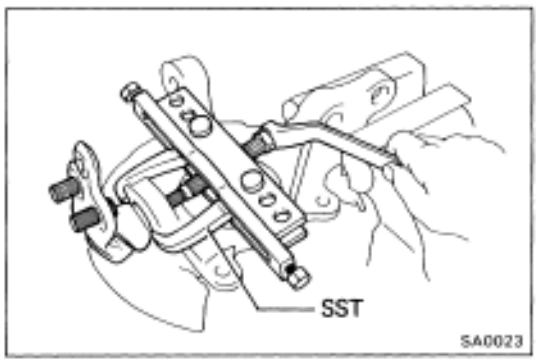

2. REMOVE BALL JOINT FROM STEERING KNUCKLE

(a) Remove the cotter pin.

(b) Remove the nut holding the ball joint to the steering knuckle.

(c) Using SST, remove the ball joint from the steering knuckle.

SST 09950–20017

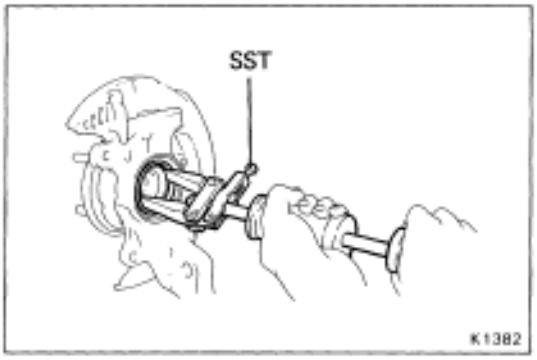

3. REMOVE INNER OIL SEAL

Using SST, remove the oil seal from the steering knuckle.

SST 09308–00010

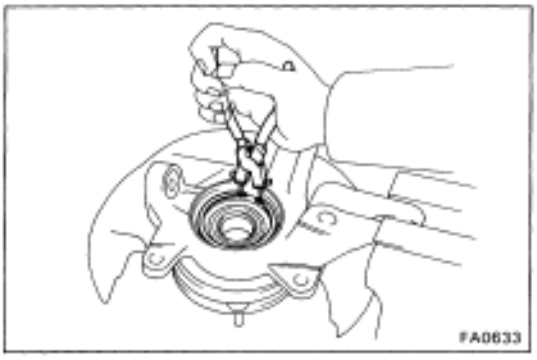

4. REMOVE HOLE SNAP RING

Using snap ring pliers, remove the hole snap ring.

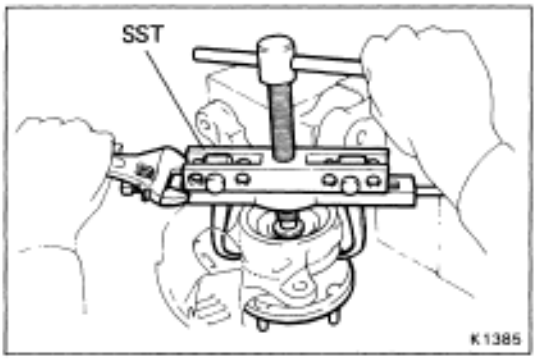

5. REMOVE AXLE HUB FROM STEERING KNUCKLE

(a) Remove the three bolts holding the dust cover to the steering knuckle.

(b) Using SST, remove the axle hub from the steering knuckle.

SST 09950–20017

(c) Remove the dust cover.

6. REMOVE BEARING INNER RACE (INSIDE)

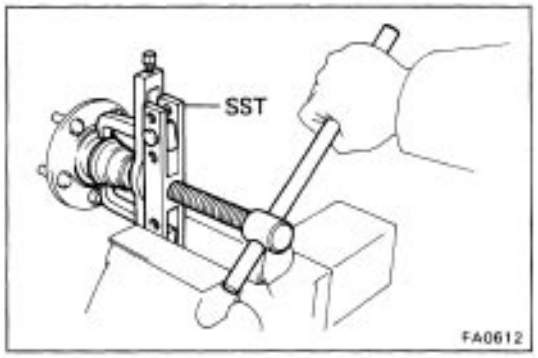

7. REMOVE BEARING INNER RACE (OUTSIDE)

Using SST, remove the inner race (outside) from the axle hub.

SST 09950–20017

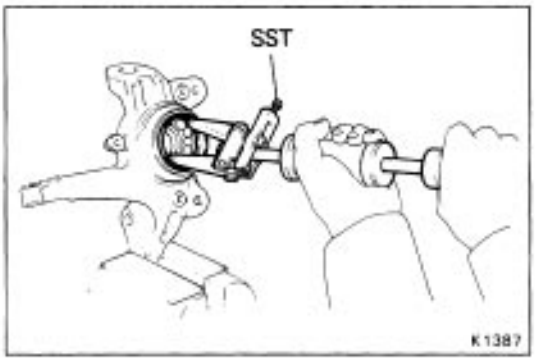

8. REMOVE OUTER OIL SEAL

Using SST, remove the oil seal from the steering knuckle.

SST 09308–00010

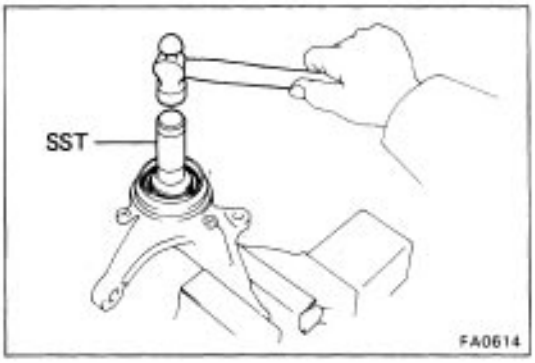

9. REMOVE HUB BEARING

(a) First, place the removed inner race (outside) in the bearing.

(b) Using SST and a hammer, remove the bearing.

SST 09605–60010

NOTICE: Always replace the bearing as an assembly.

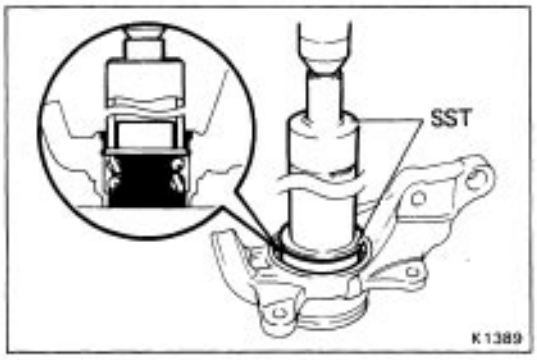

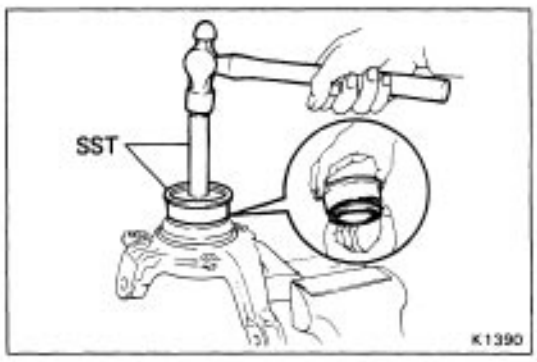

ASSEMBLY OF FRONT AXLE HUB

(See page SA–7)

1. INSTALL HUB BEARING

Using SST and press, press a new bearing into the steering knuckle.

SST 09316–60010 (09316–00010, 09316–00020)

2. INSTALL OUTER OIL SEAL

(a) Place a new bearing inner race (outside) on the hub bearing.

(b) Using SST and a hammer, drive the oil seal into the steering knuckle.

SST 09608–32010, 09710–14012 (09710–00050)

HINT: Insert the side lip of a new oil seal into the SST.

(c) Apply MP grease to the oil seal lip.

3. INSTALL DISC BRAKE DUST COVER

Apply liquid sealant to the dust cover and steering knuckle connection before assembly.

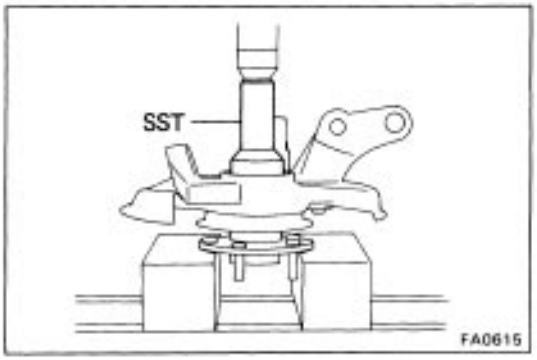

4. INSTALL AXLE HUB

(a) Place a new bearing inner race (inside) on the hub bearing.

(b) Using SST, press the hub into the steering knuckle.
SST 09310–35010

5. INSTALL HOLE SNAP RING

Using pliers, install a new hole snap ring into the steering knuckle.

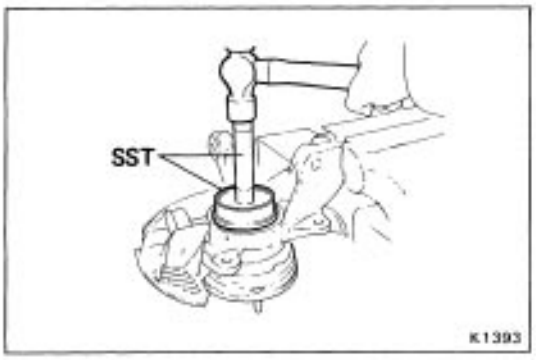

6. INSTALL INNER OIL SEAL

(a) Using SST, drive in a new oil seal to the steering knuckle surface as shown.
SST 09608–10010, 09710–14012 (09710–00050)

(b) Apply MP grease to the contact surfaces of the oil seal lip and drive shaft.

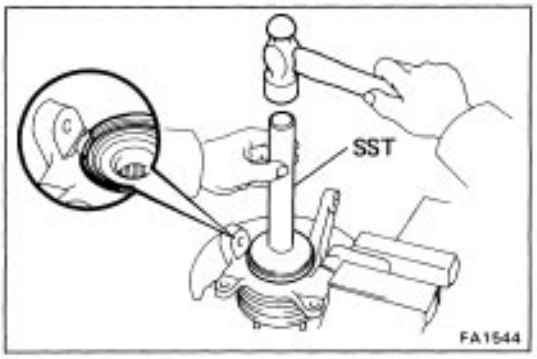

7. INSTALL DUST DEFLECTOR

Using SST, drive a new deflector into the steering knuckle.
SST 09218–46010

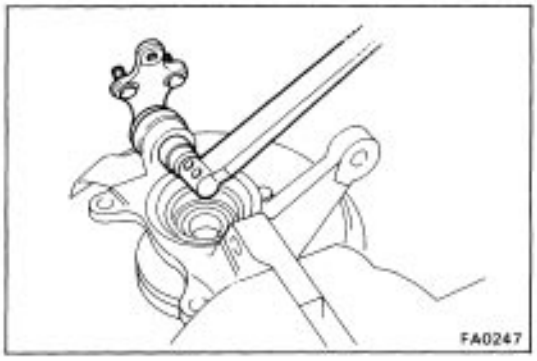

8. INSTALL BALL JOINT TO STEERING KNUCKLE

(a) Temporarily tighten the nut.
Torque: 200 kg–cm (14 ft–lb, 20 N–m)

(b) Remove the nut.

(c) Install and torque the nut.
Torque: 1,050 kg–cm (76 ft–lb, 103 N–m)

(d) Install a new cotter pin.

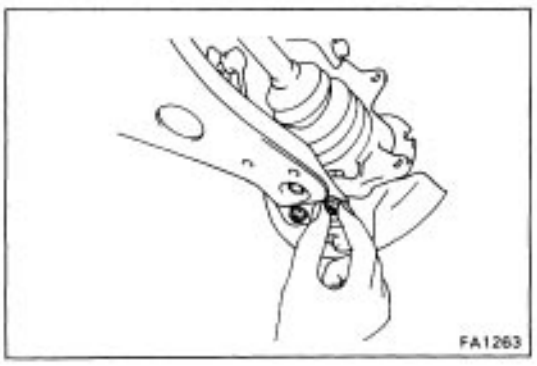

INSTALLATION OF FRONT AXLE HUB

(See page SA–7)

1. INSTALL AXLE HUB ASSEMBLY TO LOWER ARM

Temporarily install the axle hub assembly to the lower arm.

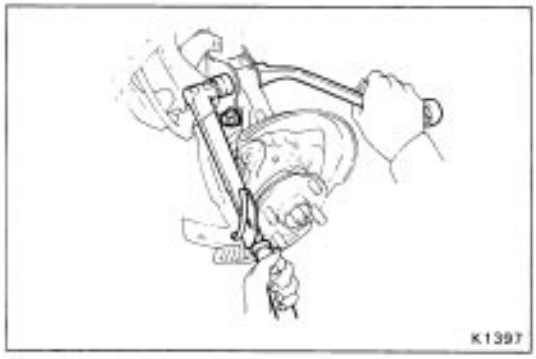

2. INSTALL STEERING KNUCKLE TO SHOCK ABSORBER

(a) Connect the steering knuckle to the shock absorber lower bracket.

(b) Insert the bolts from the rear side and tighten the nuts.

Torque: 2,800 kg–cm (203 ft–lb, 275 N–m)

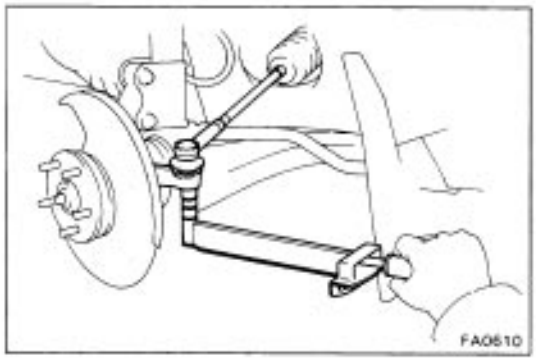

3. CONNECT TIE ROD END TO STEERING KNUCKLE

Torque the castle nut and secure it with a new cotter pin.

Torque: 500 kg–cm (36 ft–lb, 49 N–m)

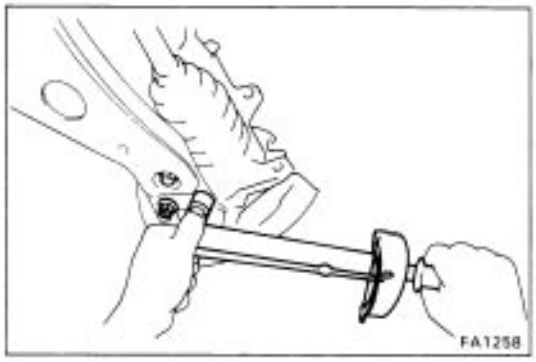

4. TORQUE BALL JOINT TO LOWER ARM

Torque: 1,450 kg–cm (105 ft–lb, 142 N–m)

5. INSTALL ROTOR DISC TO AXLE HUB

Align the matchmarks and install the rotor disc to the axle hub.

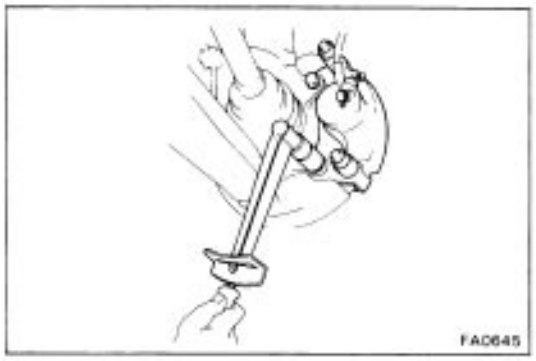

6. INSTALL BRAKE CALIPER TO STEERING KNUCKLE

Torque the bolts.

Torque: 900 kg–cm (65 ft–lb, 88 N–m)

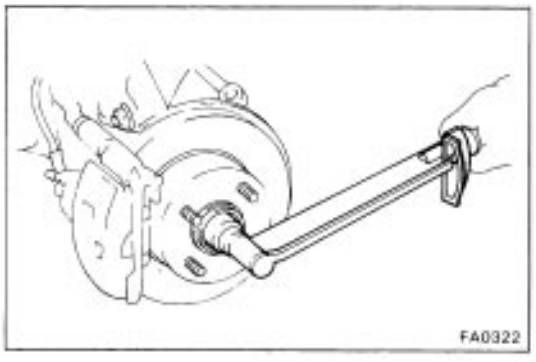

7. INSTALL BEARING LOCK NUT, LOCK NUT CAP AND COTTER PIN

(a) Torque the bearing lock nut while depressing the brake pedal.

Torque: 1,900 kg–cm (137 ft–lb, 186 N–m)

(b) Install the lock nut cap and, using pliers, install a new cotter pin.

8. CHECK FRONT WHEEL ALIGNMENT

(See page SA–3)

REPLACEMENT OF FRONT AXLE HUB BOLT

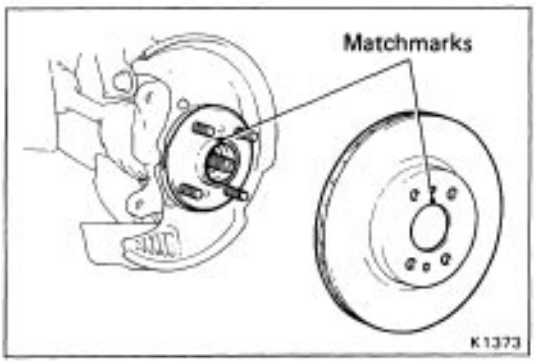

1. REMOVE DISC BRAKE CALIPER

Remove the disc brake caliper from the steering knuckle and suspend it with wire.

2. REMOVE ROTOR DISC

HINT: Before removing the rotor disc, place the matchmarks on the axle hub and rotor disc.

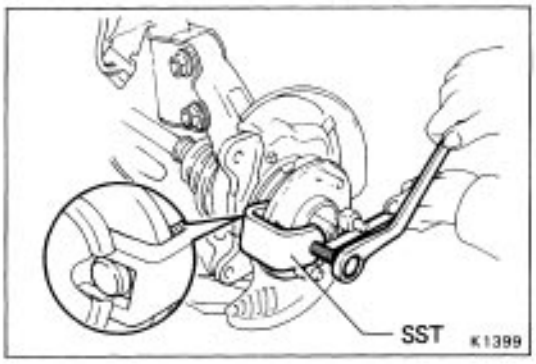

3. REMOVE FRONT AXLE HUB BOLT

(a) Align the disc brake dust cover cutting portion and axle hub bolt.

(b) Using SST, remove the axle hub bolt.

SST 09628–10011

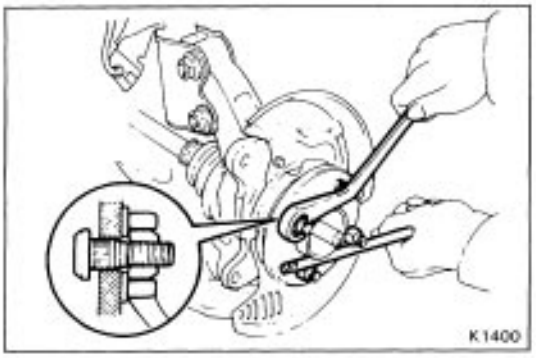

4. INSTALL NEW AXLE HUB BOLT

Hold the axle hub, and install a new axle hub bolt.

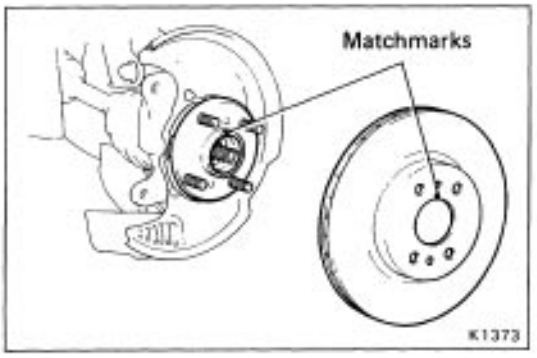

5. INSTALL ROTOR DISC

Align the matchmarks, and install the rotor disc to the axle hub.

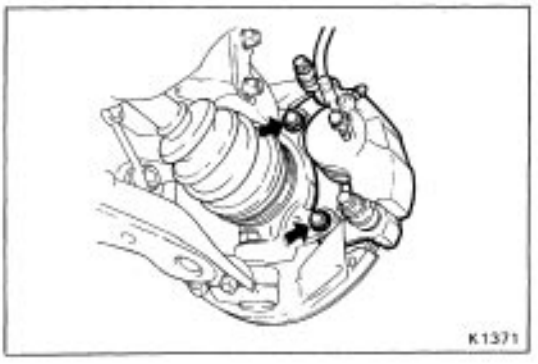

6. INSTALL DISC BRAKE CALIPER TO STEERING KNUCKLE

Torque: 900 kg–cm (65 ft–lb, 88 N–m)

FRONT DRIVE SHAFT

COMPONENTS (2WD)

TOYOTA type

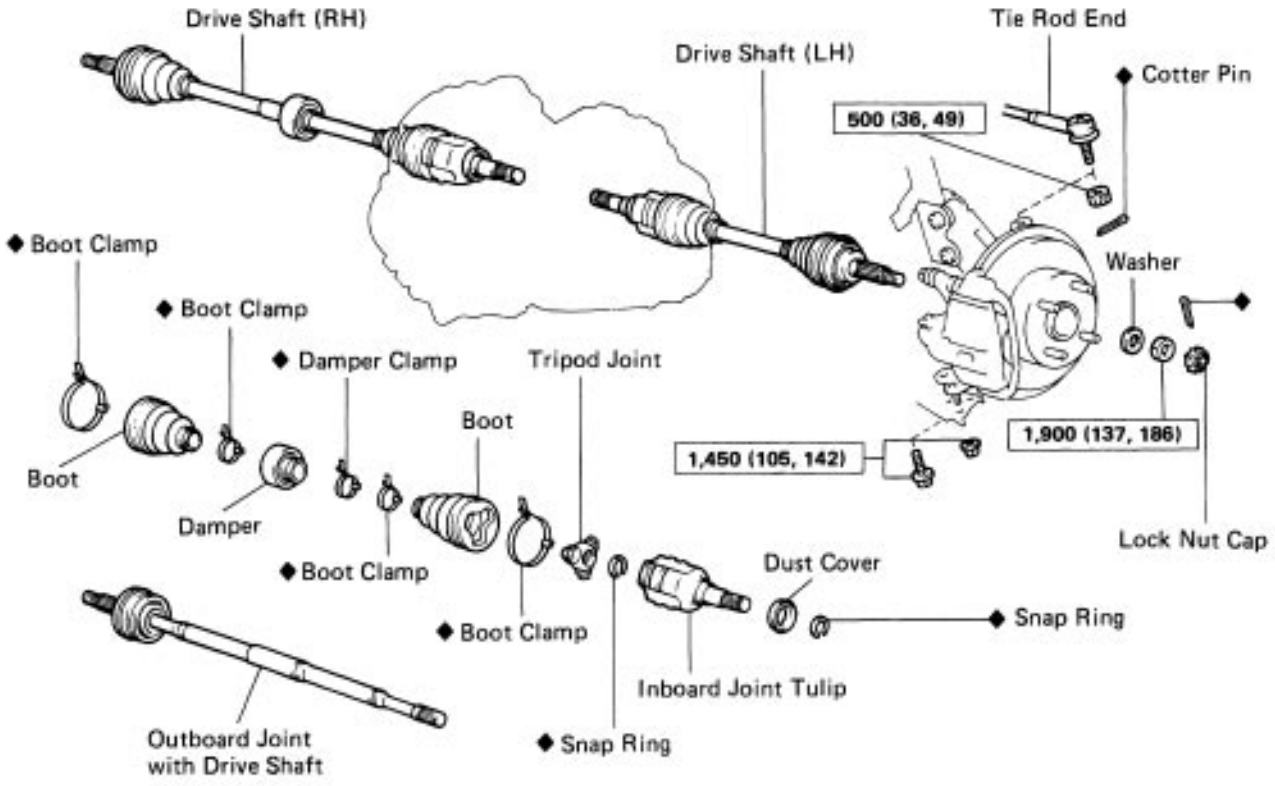

SAGINAW type

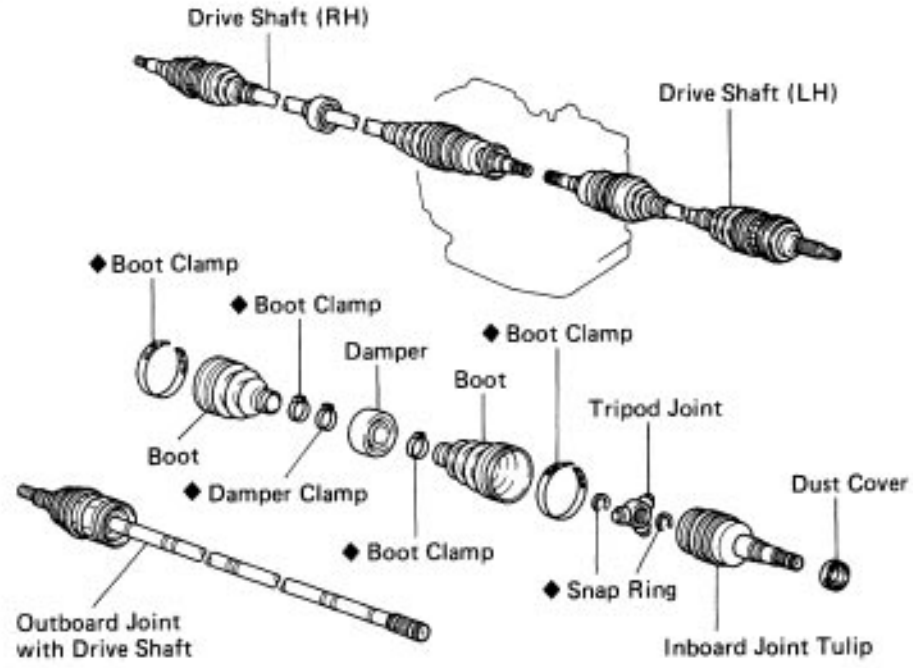

kg-cm (ft-lb, N·m) : Specified torque

◆ Non-reusable part

SA0431
SA0432

COMPONENTS (4WD)

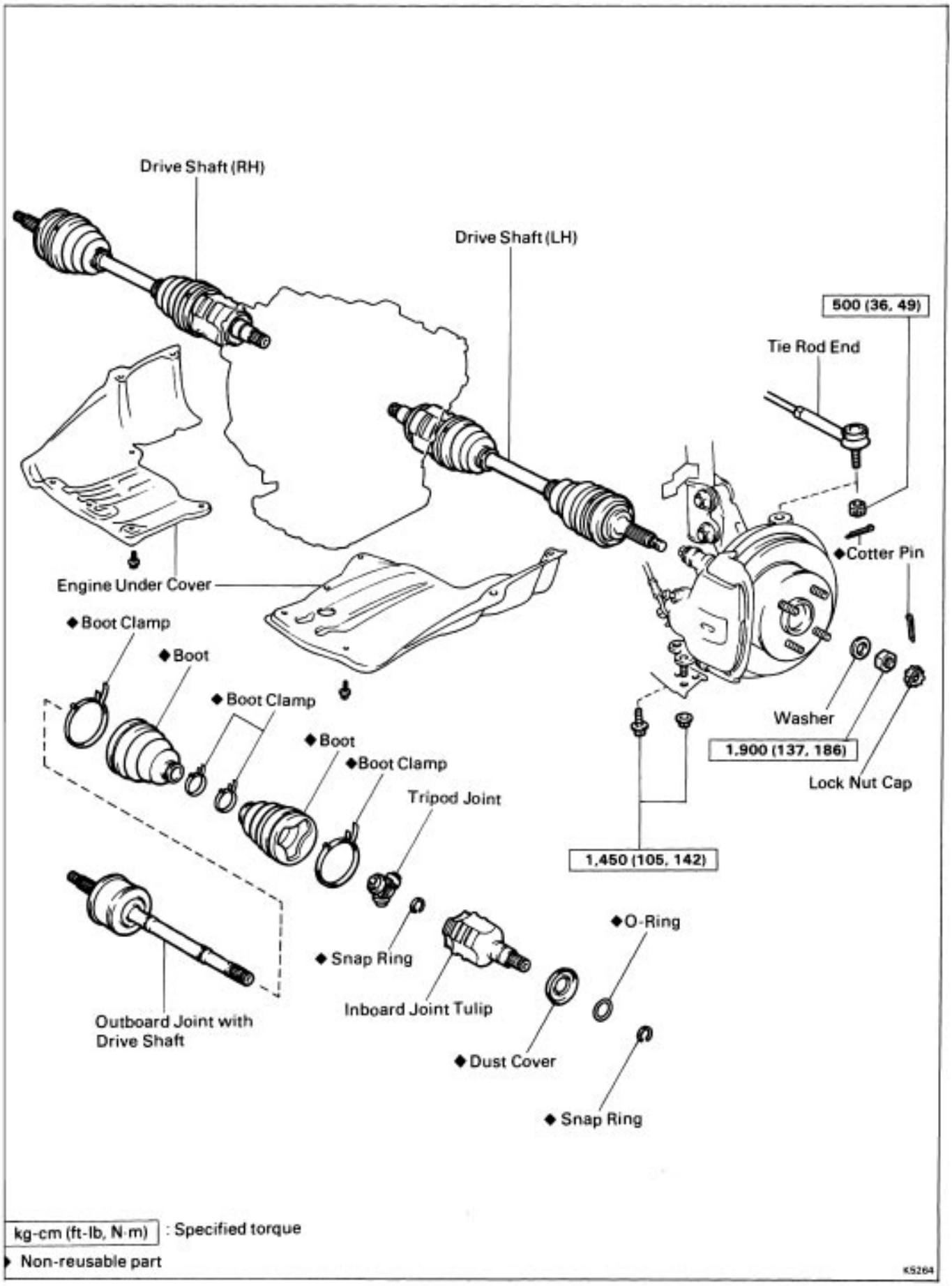

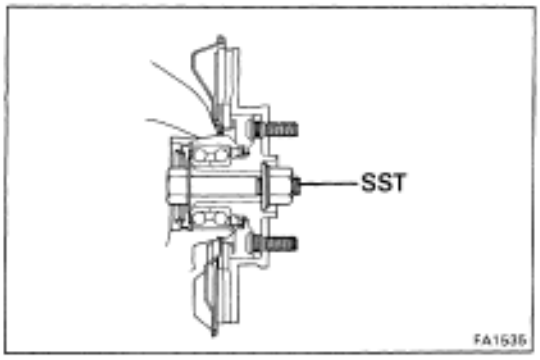

NOTICE: The hub bearing could be damaged if it is subjected to the vehicle weight, such as when moving the vehicle with the drive shaft removed. Therefore, if it is absolutely necessary to place the vehicle weight on the hub bearing, first support it with SST.

SST 09608–16041 (09608–02020, 09608–02040)

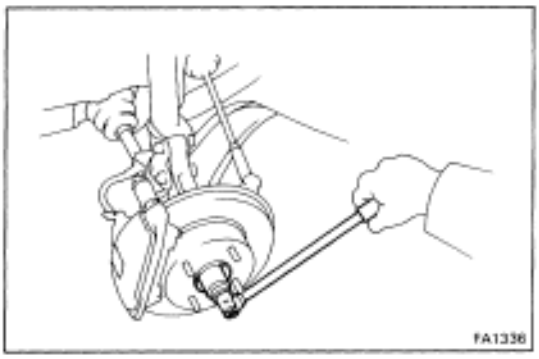

REMOVAL OF FRONT DRIVE SHAFT

(See pages SA–14, 15)

1. REMOVE COTTER PIN, LOCK NUT CAP AND BEARING LOCK NUT

(a) Remove the cotter pin and lock nut cap.

(b) Loosen the bearing lock nut while depressing the brake pedal.

2. REMOVE ENGINE UNDER COVERS

3. DRAIN OUT GEAR OIL OR FLUID

4. DISCONNECT TIE ROD END FROM STEERING KNUCKLE

(a) Remove the cotter pin and nut from the steering knuckle.

(b) Using SST, disconnect the tie rod end from the steering knuckle.

SST 09628–62011

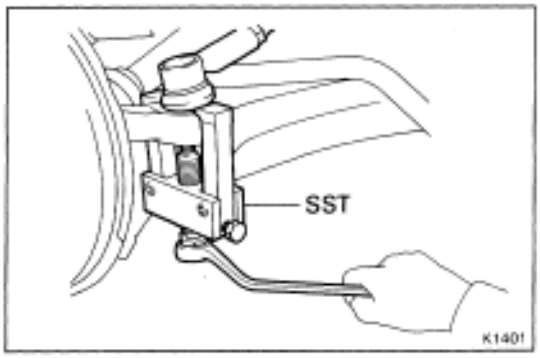

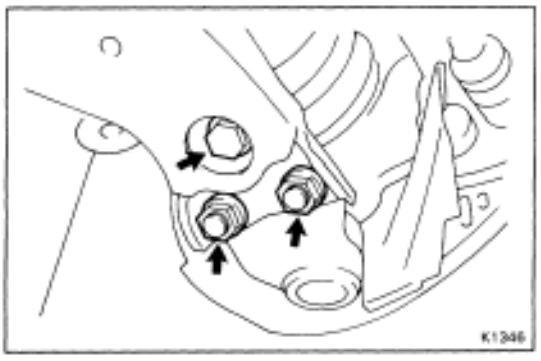

5. DISCONNECT STEERING KNUCKLE FROM LOWER ARM

(a) Remove the bolt and two nuts.

(b) Disconnect the lower arm from the steering knuckle.

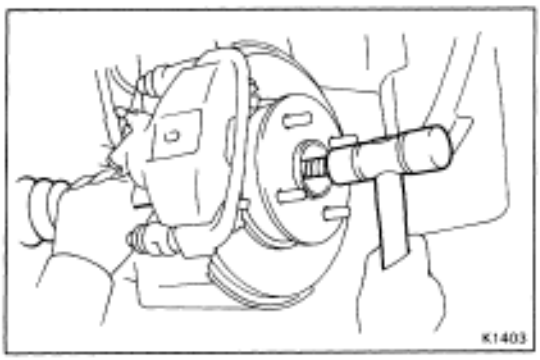

6. REMOVE FRONT DRIVE SHAFT

(a) Using a plastic hammer, disconnect the drive shaft from the axle hub.

NOTICE: Cover the drive shaft boot with cloth to protect it from damage.

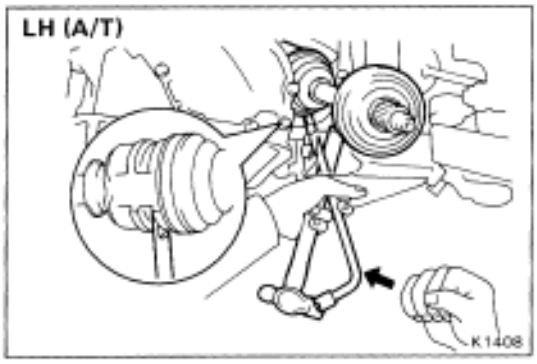

(b) (2WD)
Using hub nut wrench and hammer handle or a equivalent, remove the front drive shaft as shown
HINT: Be careful not to damage the dust cover.

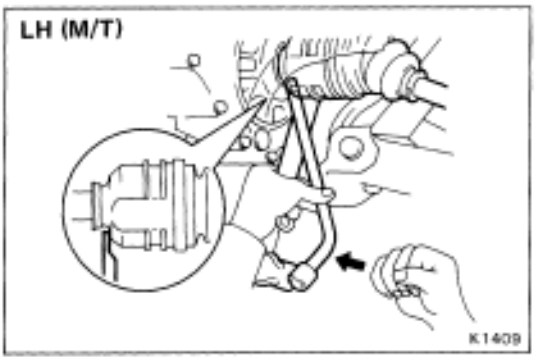

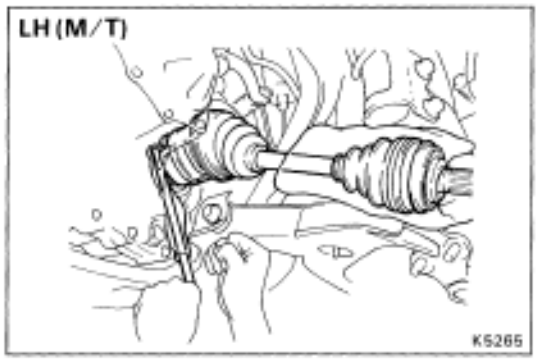

(c) (4WD)
Using hub nut wrench, remove the LH drive shaft a: shown.
HINT: Be careful not to damage the dust cover.

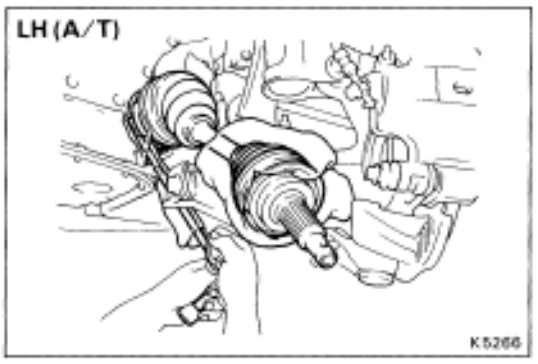

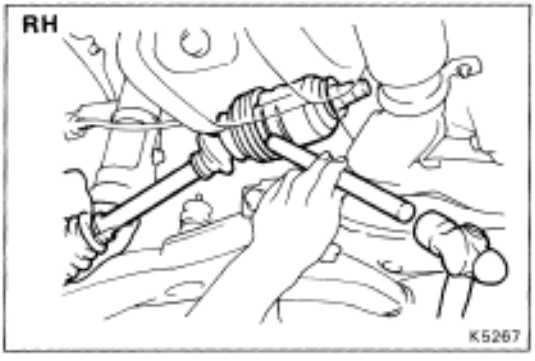

(d). Using a brass bar and a hammer, remove the RH drive shaft.

7. IF NECESSARY, REPLACE SIDE GEAR SHAFT OIL SEAL

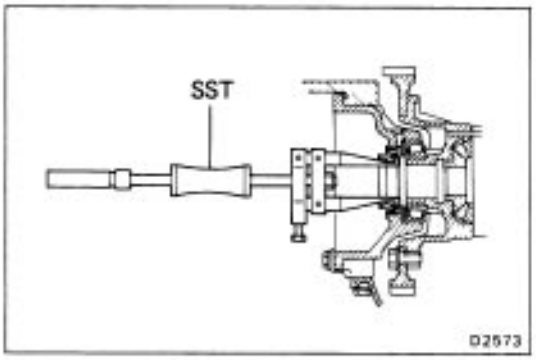

(a) Using SST, pull out the oil seal.
SST 09308–00010

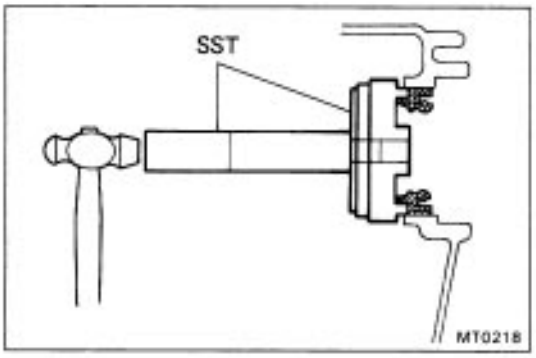

(b) Using SST and a hammer, tap in a new oil seal.
SST M/T –LH
A/T (A240L)–LH
09350–32014 (09351–32111, 09351–32130)
HINT: Coat the oil seal lip with MP grease.

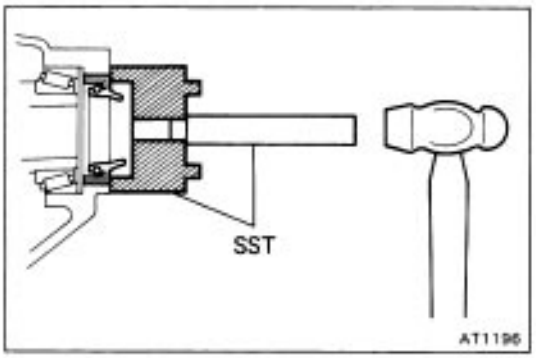

SST M/T –RH
A/T (A131 L)–LH and RH
(A240L) –RH
09350–32014 (09351–32130, 09351–32150)
HINT: Coat the oil seal lip with MP grease.

8. (4WD)

IF NECESSARY, REPLACE OIL SEAL

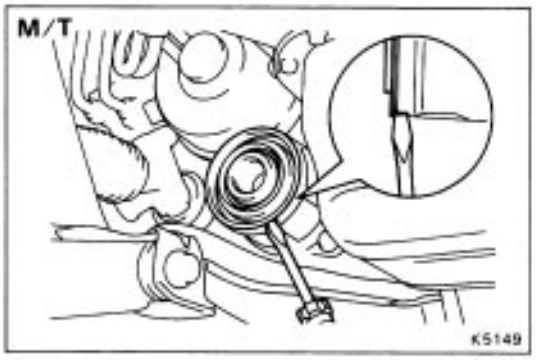

(a) Using a screwdriver, remove the RH oil seal.

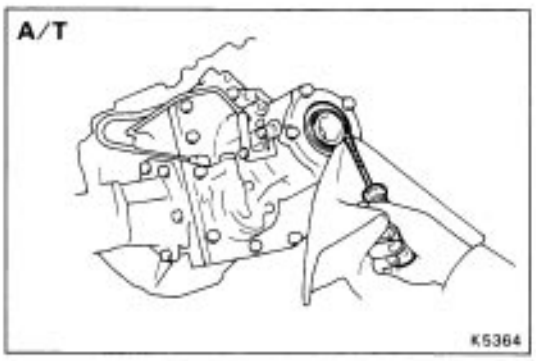

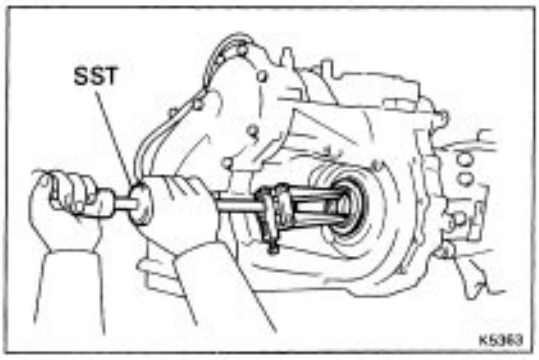

(b) Using SST, pull out the LH oil seal.
SST 09308– 10

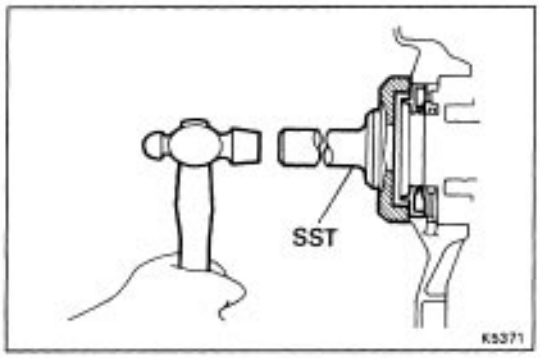

(c) Using SST and a hammer, tap in a new LH oil seal.
SST 09223–15010
HINT: Coat the oil seal lip with MP grease.

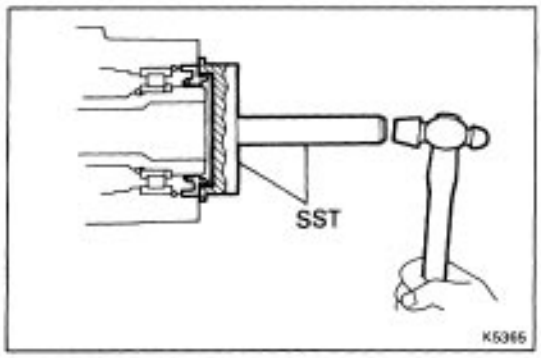

(d) (A/T)
Using SST and a hammer, tap in a new RH oil seal.
SST 09608–32010,09608–35014 (09608–06020)
HINT: Coat the oil seal lip with MP grease.

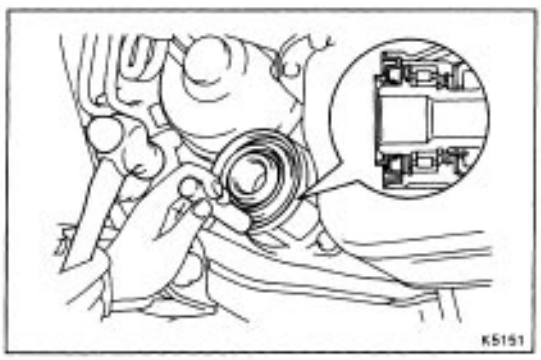

(e) (M /T)
Using a brass bar and a hammer, tap in a new RH oil seal.
HINT: Coat the oil seal lip with MP grease.

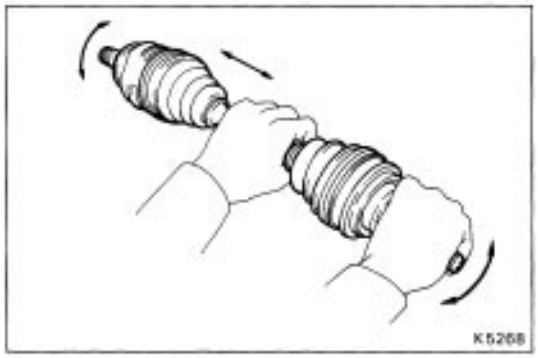

DISASSEMBLY OF FRONT DRIVE SHAFT

(See pages SA–14, 15)

1. CHECK DRIVE SHAFT

(a) Check to see that there is no play in the outboard joint.

(b) Check to see that the inboard joint slides smoothly in the thrust direction.

(c) Check to see that there is no remarkable play in the radial direction of the inboard joint.

(d) Check for damage to boots.

2. REMOVE SNAP RING FROM INBOARD JOINT SHAFT

3–1. (TOYOTA TYPE)

REMOVE INBOARD JOINT BOOT CLAMPS

(a) Using a screwdriver, remove the two boot clamps.

(b) Slide the inboard joint boot toward the outboard joint.

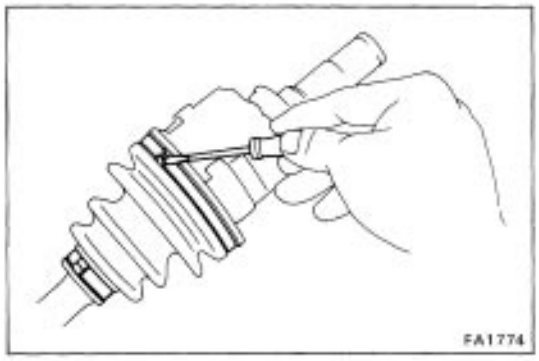

3–2. (SAGINAW TYPE)

REMOVE INBOARD JOINT BOOT CLAMP

(a) Using a boot clamp tool, draw hooks together and remove the large clamp.

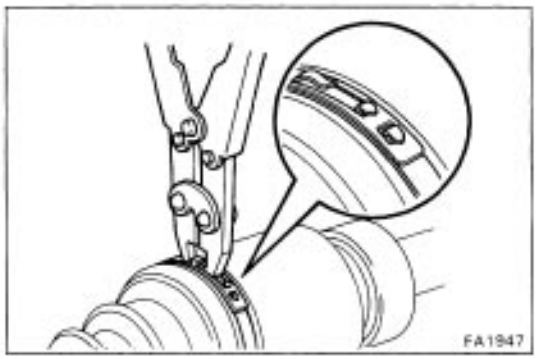

(b) Using side cutters, cut the small boot clamp and remove it.

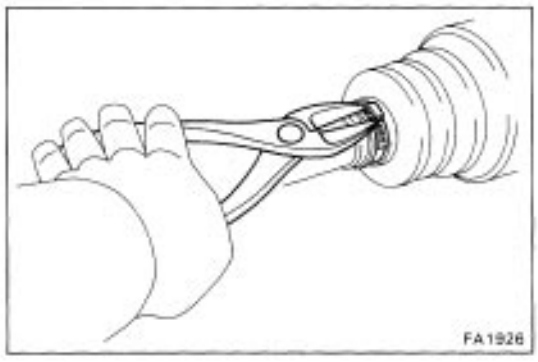

4. REMOVE INBOARD JOINT TULIP

(a) Place the matchmarks on the inboard joint tulip and tripod.

NOTICE: Do not punch the marks.

(b) Remove the inboard joint tulip from the drive shaft.

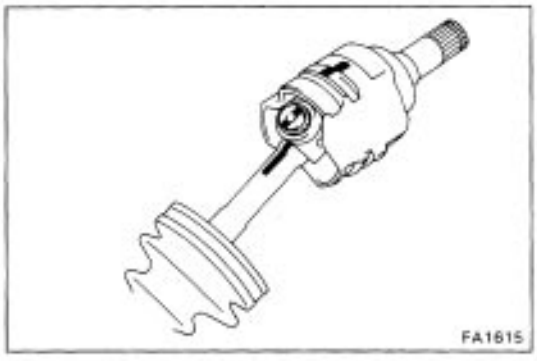

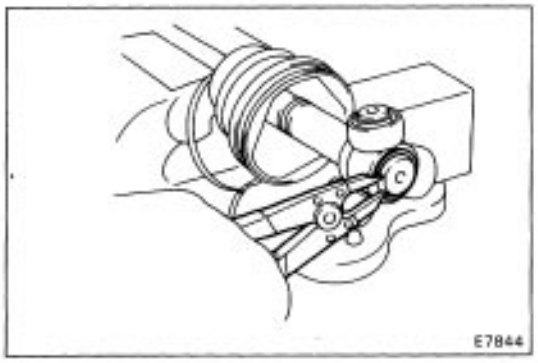

5. REMOVE TRIPOD JOINT

(a) Using snap ring pliers, remove the snap ring.

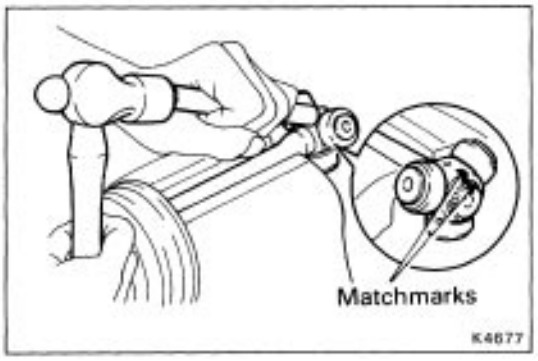

(b) Place the matchmarks on the drive shaft and tripod.

(c) Using a brass bar and a hammer, remove the tripod joint from the drive shaft.

NOTICE: Do not tap the roller.

6. REMOVE INBOARD JOINT BOOT

Slide out the inboard joint boot.

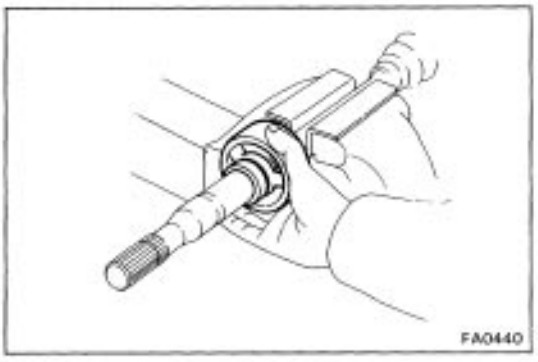

7. (2WD RH DRIVE SHAFT)

REMOVE DAMPER

(a) (TOYOTA type)

Using a screwdriver, remove the damper clamp.

(b) (SAGINAW type)

Using side cutters, cut the damper clamp and remove it.

(c) Remove the damper.

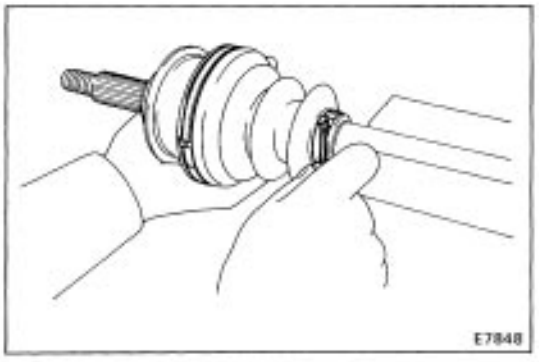

8–1. (TOYOTA TYPE)

REMOVE OUTBOARD JOINT BOOT

(a) Using a screwdriver, remove the two boot clamps of the outboard joint boot.

(b) Remove the boot from outboard joint.

NOTICE: Do not disassemble the outboard joint.

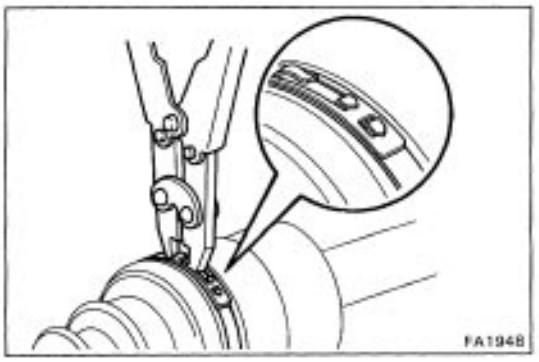

8–2. (SAGINAW TYPE)

REMOVE OUTBOARD JOINT BOOT

(a) Using a boot clamp tool, draw hooks together and remove the large clamp.

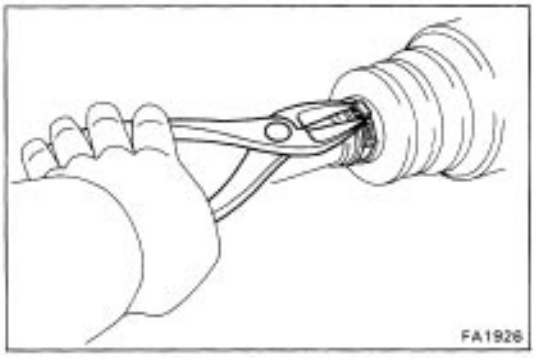

(b) Using side cutters, cut the small boot clamp and remove it.
(c) Remove the boot from the outboard joint.
NOTICE: Do not disassemble the outboard joint.

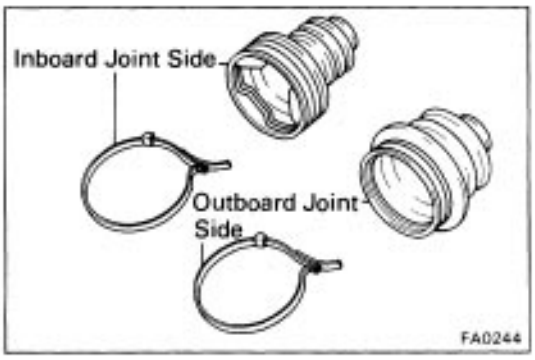

ASSEMBLY OF FRONT DRIVE SHAFT

(See pages SA–14, 15)

1. TEMPORARILY INSTALL OUTBOARD JOINT BOOT AND NEW BOOT CLAMPS

NOTICE: The boot and clamp of the outboard joint are smaller than those of the inboard joint (TOYOTA type).

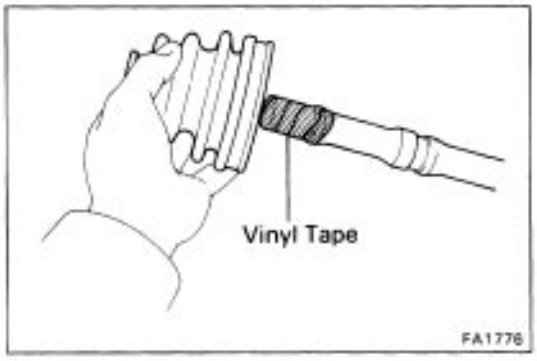

Temporarily install the boot and two new boot clamps for the outboard joint to the drive shaft.
HINT: Before installing the boot, wrap vinyl tape around the spline of the drive shaft to prevent damaging the boot.

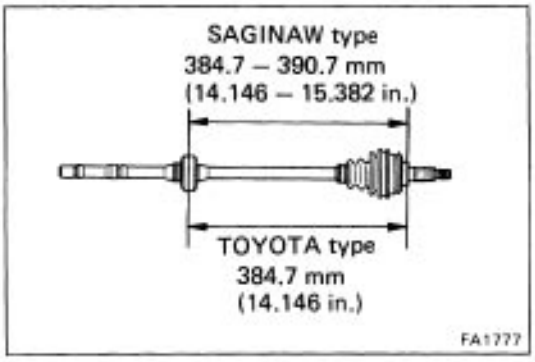

2. (2WD RH DRIVE SHAFT)

TEMPORARILY INSTALL DAMPER AND NEW DAMPER CLAMP

HINT: Fix the clamp position in line with the groove of the drive shaft.

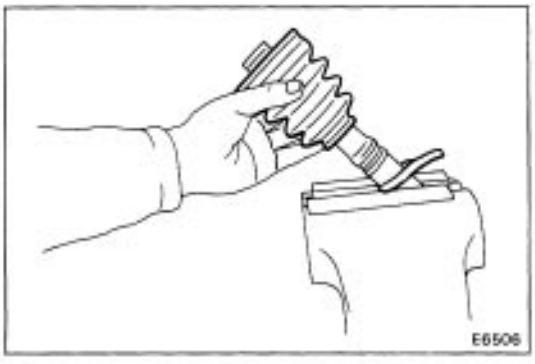

3. TEMPORARILY INSTALL INBOARD JOINT BOOT AND NEW BOOT CLAMPS

Temporarily install the boot and two new boot clamps for the inboard joint to the drive shaft.

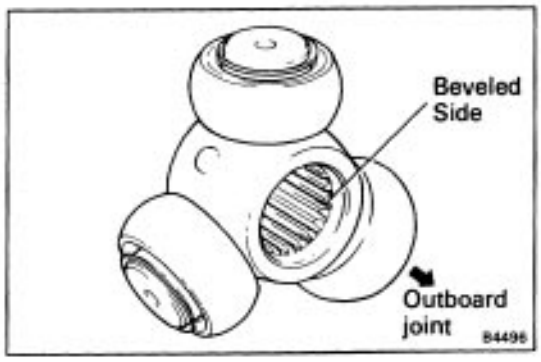

4. INSTALL TRIPOD JOINT

(a) Place the beveled side of the tripod joint axial spline toward the outboard joint (TOYOTA type).

HINT: The SAGINAW–type tripod joint can be installed facing either way.

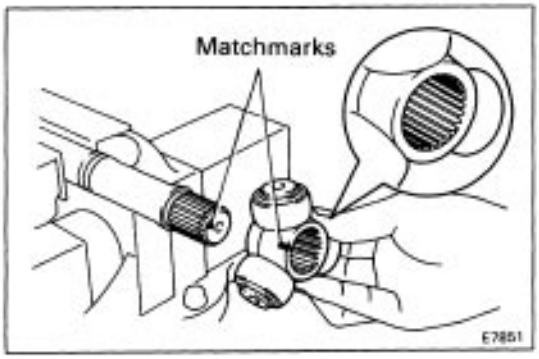

(b) Align the matchmarks placed before removal.

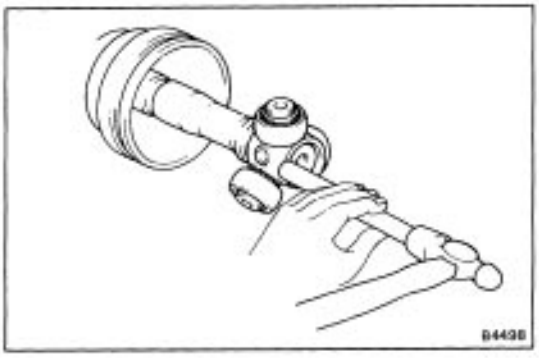

(c) Using a brass bar and a hammer, tap in the tripod joint to the drive shaft.

NOTICE: Do not tap the roller.

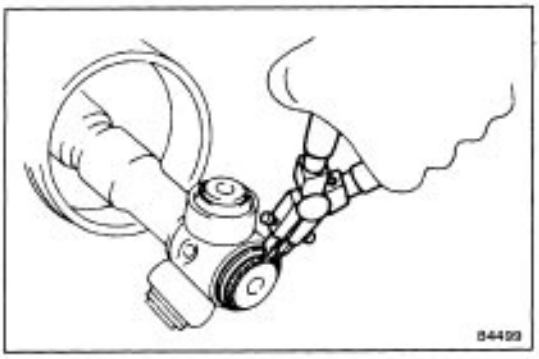

(d) Using snap ring pliers, install a new snap ring.

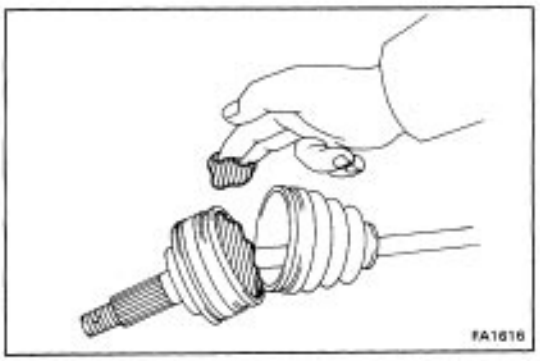

5. INSTALL BOOT TO OUTBOARD JOINT

Before assembling the boot, fill grease into the outboard joint and boot.

HINT: Use the grease supplied in the boot kit.

Grease capacity: TOYOTA type

120 – 130 g (0.26 – 0.29 lb)

SAGINAW type

130 – 150 g l0.29 – 0.33 lb1

Grease color: Black

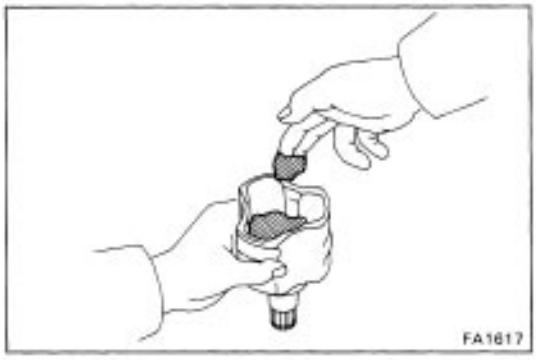

6. INSTALL INBOARD JOINT TULIP TO FRONT DRIVE SHAFT

(a) Pack in the grease to the inboard joint tulip and boot.

HINT: Use the grease supplied in the boot kit.

Grease capacity:

TOYOTA type 180 – 190 g (0.40 – 0.42 lb)

SAGINAW type 230 – 250 g (0.51 – 0.55 lb)

Grease color: Yellow ocher

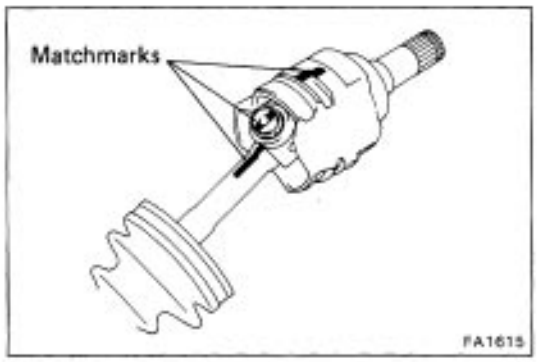

(b) Align the matchmarks placed before remove, and install the inboard joint tulip to the drive shaft.

(c) Install the boot to the inboard joint tulip.

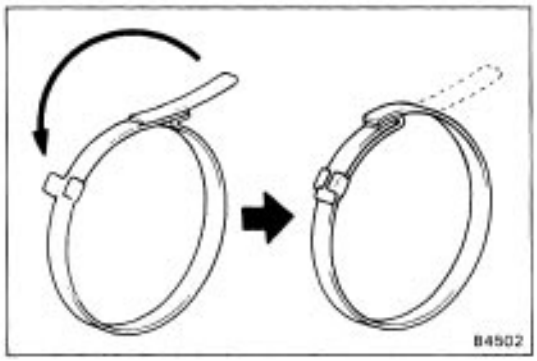

7–1. (TOYOTA TYPE)
ASSEMBLE BOOT CLAMPS AND DAMPER CLAMP

(a) Be sure the boot is on the shaft groove.

(b) Using a screwdriver, bend the band and lock it as shown in the illustration.

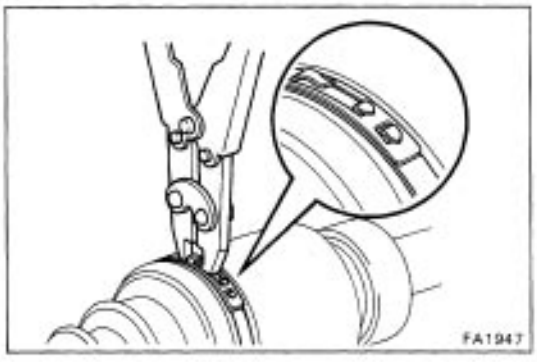

7–2. (SAGINAW TYPE)
ASSEMBLE BOOT CLAMPS AND DAMPER CLAMP

(a) Be sure the boot (large side) is on the shaft groove.

(b) Using a boot clamp tool, place pincer jaws in closing hooks of large clamp.

(c) Secure clamp by drawing closing hooks together.

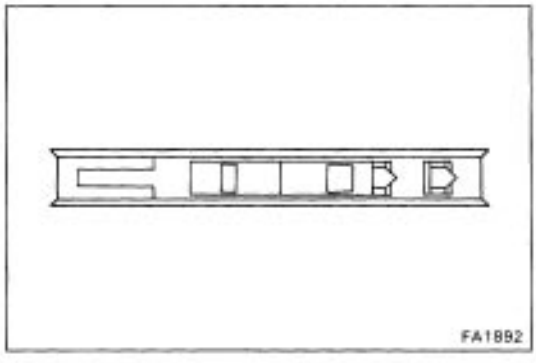

(d) Check that the clamp at closed position is the same as in the illustration.

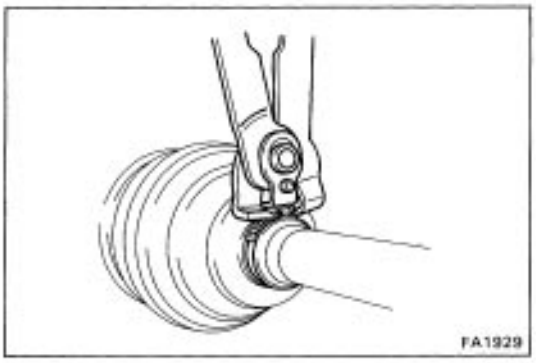

(e) Be sure the boot (small side) is on the shaft groove.
(f) Using a boot clamp tool, tighten the clamp.

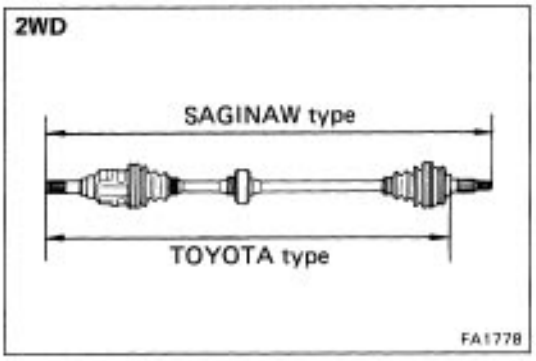

(g) Insure that the boot is not stretched or contracted when the drive shaft is at standard length.

Drive shaft standard length:

2WD

TOYOTA type

LH 523.2 – 533.2 mm (20.598 – 20.992 in.)

RH 837.7 – 847.7 mm (32.980 – 33.374 in.)

SAGINAW type

LH 623.6 mm (24.551 in.)

RH 938.1 mm (36.933 in.)

4WD

LH 501.0 – 511.0 mm (19. 724 – 20.118 in.)

RH 504.2 – 514.2 mm (19.850 – 20.244 in.)

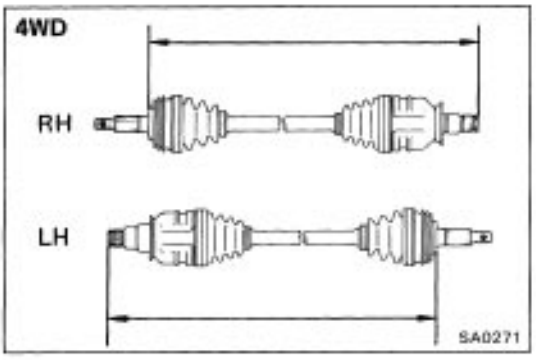

(h) Install the snap ring.

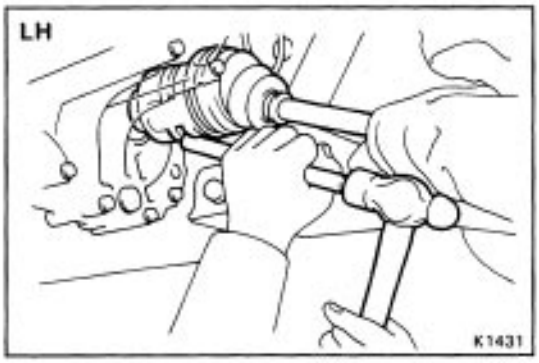

INSTALLATION OF FRONT DRIVE SHAFT

(See pages SA–14, 15)

1. INSTALL FRONT DRIVE SHAFT

(a) Coat MP grease to the oil seal lip.

(b) Using a brass bar and hammer, tap in the drive shaft until it makes contact with the pinion shaft.

CAUTION: Be careful not to damage the boots.

HINT:

- Before installing the drive shaft, set the snap ring opening side facing downward.
- Whether or not the drive shaft is making contact with the pinion shaft can be known by the sound or feeling when driving it in.

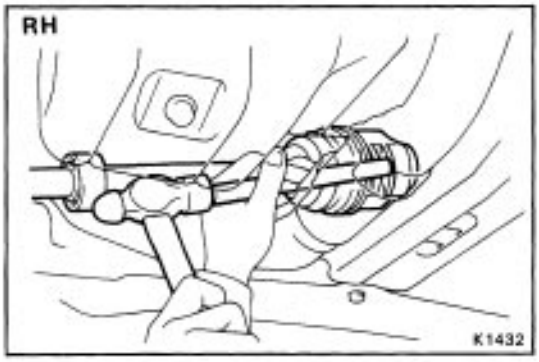

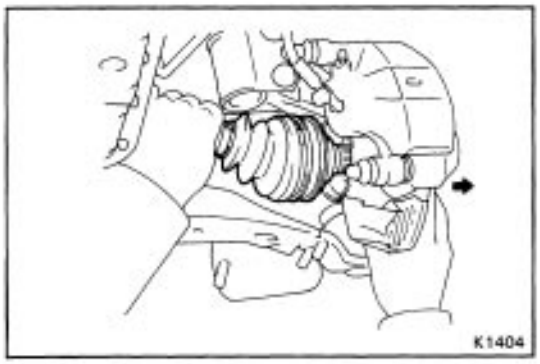

(c) Install the outboard joint side of the drive shaft to the axle hub.

NOTICE: Be careful not to damage the boot.

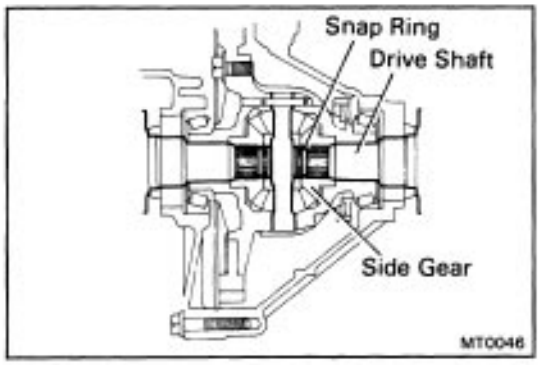

2. CHECK INSTALLATION OF FRONT DRIVE SHAFT

(a) Check that there is 2 – 3 mm (0.08 – 0.12 in.) of play in axial direction.

(b) Check that the drive shaft will not come out by trying to pull it completely out by hand.

HINT: When checking pull the inboard joint so as not to damage the boot.

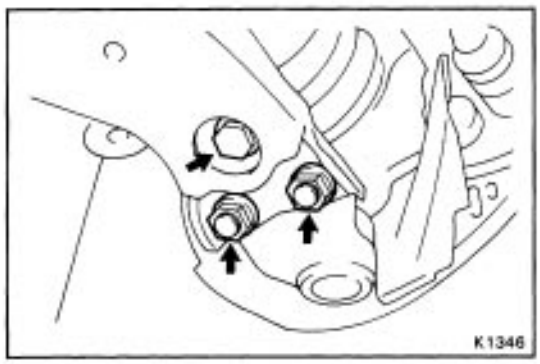

3. CONNECT STEERING KNUCKLE TO LOWER ARM

Torque: 1,450 kg–cm (105 ft–lb, 142 N–m)

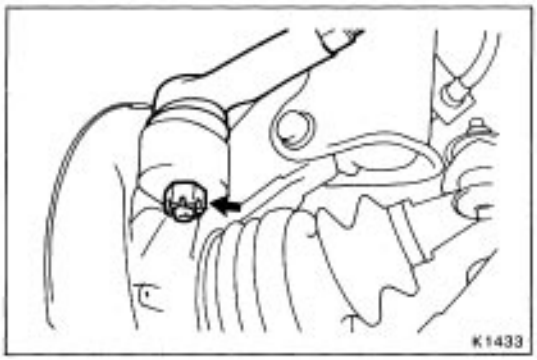

4. CONNECT TIE ROD END TO STEERING KNUCKLE

Install and torque the nut, and secure it with a new cotter pin.

Torque: 500 kg–cm (36 ft–lb, 49 N–m)

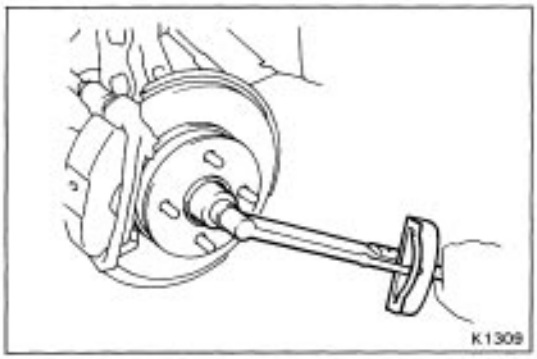

5. INSTALL BEARING LOCK NUT, LOCK NUT CAP AND COTTER PIN

(a) Torque the bearing lock nut while depressing the brake pedal.

Torque: 1,900 kg–cm (137 ft–lb, 186 N–m)

(b) Install the lock nut cap and, using pliers, install a new cotter pin.

6. FILL TRANSAXLE WITH GEAR OIL OR FLUID

MT (2WD)

Oil grade: API GL–4 or GL–5

Viscosity: SAE 75W–90 or 80W–90

(4WD)

Oil grade: API GL–5

Viscosity: Above –181C (0 ˚ F) SAE 75W–90, 80W–90 or 90

Below –180C (0 ˚ F) SAE 75W–90, 80W–90 or 80w

A/T Fluid type: ATF DEXRON® II

7. INSTALL ENGINE UNDER COVER

8. CHECK FRONT WHEEL ALIGNMENT

(See page SA–3)

FRONT SUSPENSION

COMPONENTS

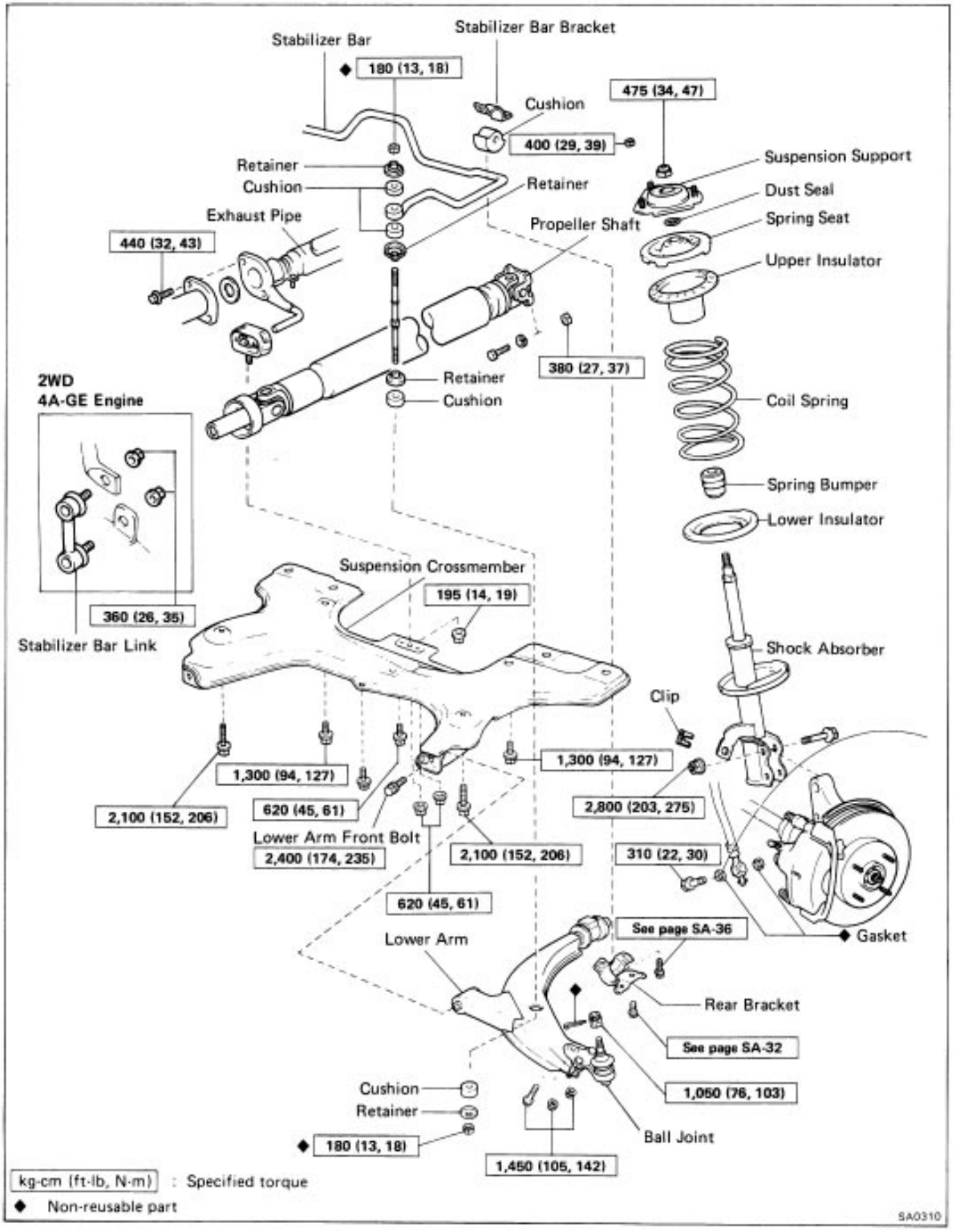

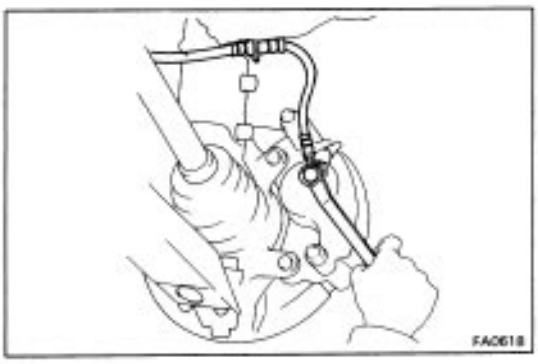

Front Shock Absorber

(See page SA–28)

REMOVAL OF FRONT SHOCK ABSORBER ASSEMBLY

1. DISCONNECT BRAKE HOSE

(a) Remove the union bolt and two gaskets, and disconnect the brake hose from the disc brake caliper.
(b) Drain the brake fluid into a container.
(c) Remove the clip from the brake hose.
(d) Pull oft the brake hose from the brake hose bracket.

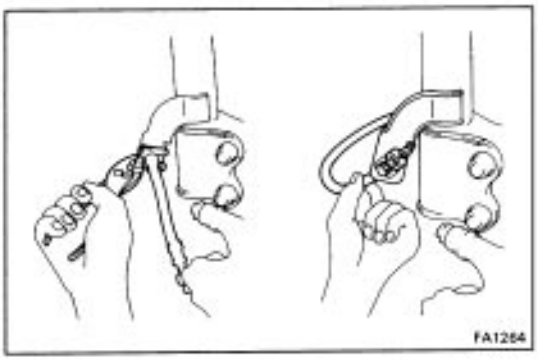

2. DISCONNECT SHOCK ABSORBER FROM STEERING KNUCKLE

Remove the bolts and nuts, and disconnect the shock absorber from the steering knuckle.

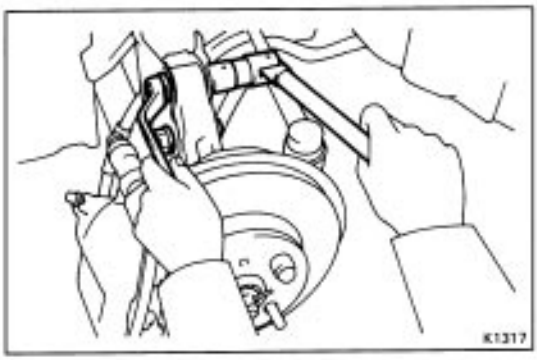

3. REMOVE SHOCK ABSORBER FROM BODY

(a) Remove the three nuts holding the top of the suspension support.
(b) Remove the shock absorber from the body.

NOTICE: Cover the drive shaft boot with cloth to avoid damaging it.

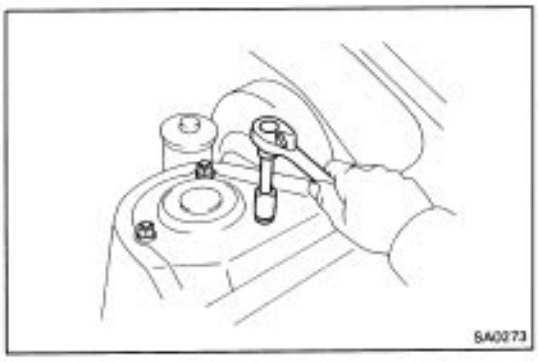

4. CLAMP SHOCK ABSORBER IN VISE

Install a bolt and two nuts to the bracket at the lower portion of the shock absorber shell and secure it in a vise.

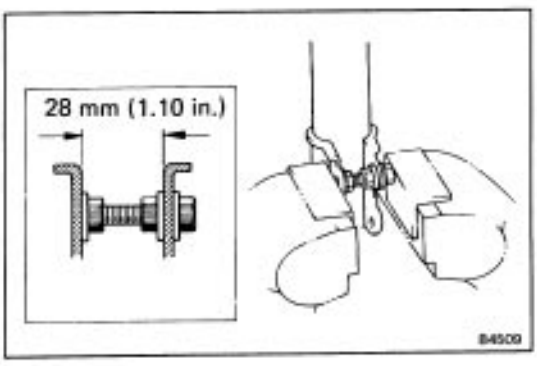

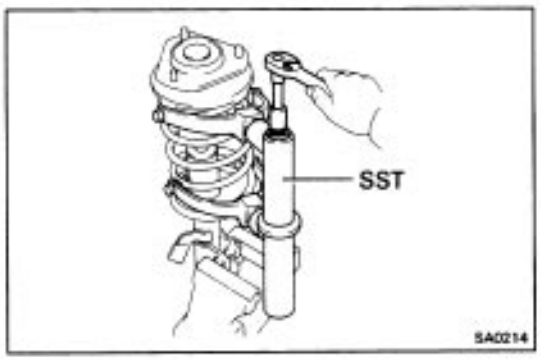

5. REMOVE COIL SPRING

(a) Using SST, compress the coil spring.
SST 09727–30020

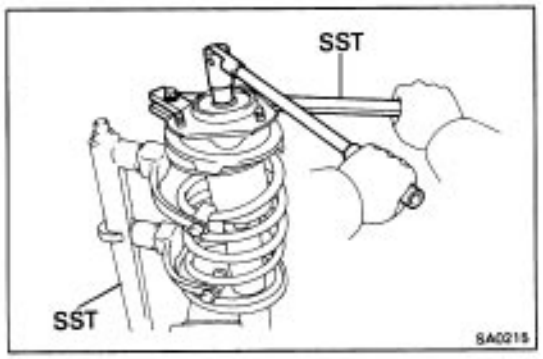

(b) Using SST, hold the spring seat so that it will not turn, and remove the nut.
SST 09729–22031

(c) Remove the suspension support, spring seat, dust seal, spring, insulators and bumper.

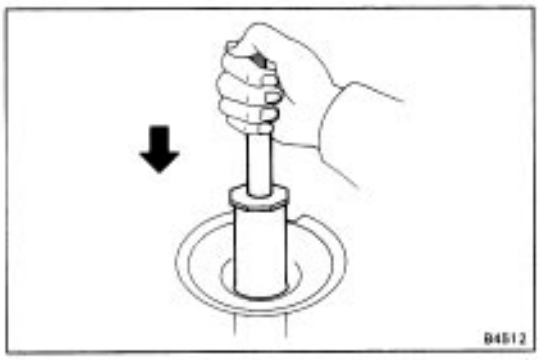

INSPECTION AND REPLACEMENT OF FRONT SHOCK ABSORBER

INSPECT OPERATION OF SHOCK ABSORBER

(a) While pushing the piston rod, check that the pull throughout the stroke is even, and there is no abnormal resistance or noise.

(b) Push the piston rod in fully and release it. Check that it returns at a constant speed throughout.

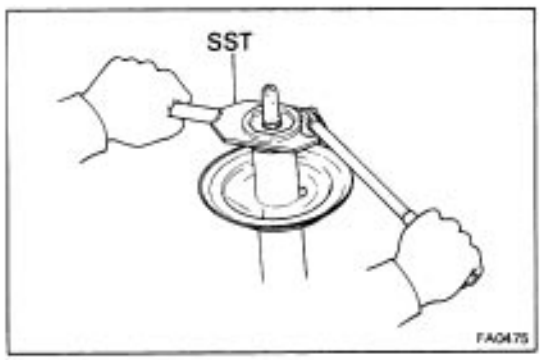

If the shock absorber operation is defective, replace the shock absorber as an assembly.

NOTICE: Before discarding the shock absorber, first loosen the ring nut 2 or 3 turns with SST to release the gas completely.

SST 09720–00012 (09721–00071)

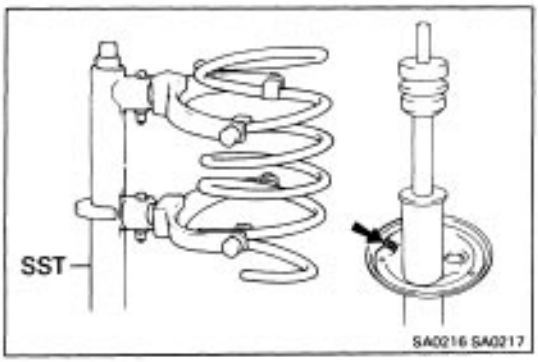

INSTALLATION OF FRONT SHOCK ABSORBER ASSEMBLY

1. INSTALL BUMPER, COIL SPRING, INSULATORS, SPRING SEAT AND DUST SEAL

(a) Install the spring bumper to piston rod.
(b) Using SST, compress the coil spring.
SST 09727–30020
(e) Install the lower insulator.
(d) Align the coil spring end with the lower seat hollow and install it.
(e) Install the upper insulator.
(f) Face the "OUT" mark of the spring seat toward the outside of the vehicle, and install it.
(g) Install the dust seal on the spring seat.
(h) Install the suspension support.

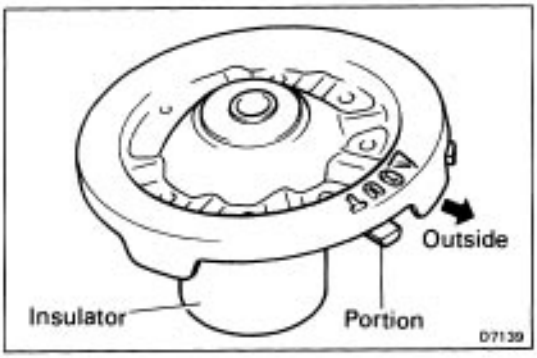

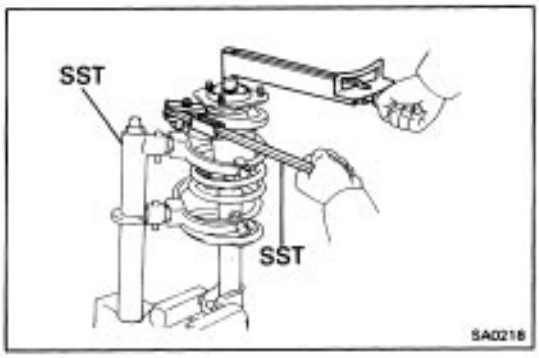

(i) Using SST, install and torque a new suspension support nut.
SST 09729–22031
Torque: 475 kg–cm (34 ft–lb, 47 –m)

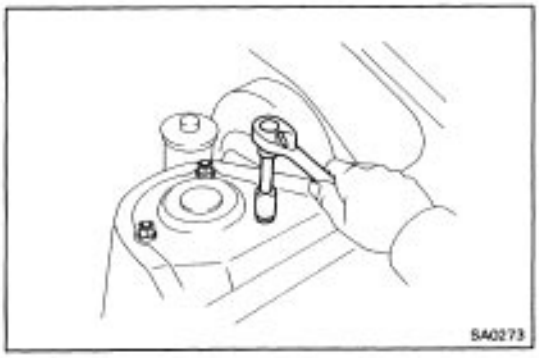

2. INSTALL SHOCK ABSORBER TO BODY

Install the shock absorber in place with the three nuts.
Torque: 400 kg–cm (29 ft–lb, 39 N–m)
NOTICE: Be careful not to damage the drive shaft boot.

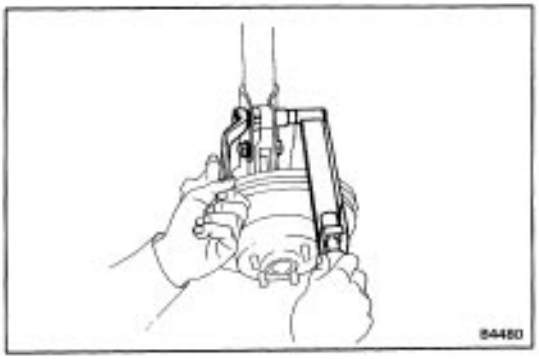

3. INSTALL SHOCK ABSORBER TO STEERING KNUCKLE

(a) Connect the steering knuckle to the shock absorber lower bracket.
(b) Insert the two bolts from the rear side.
(c) Install and torque the two nuts.
Torque: 2,800 kg–cm (203 ft–lb, 275 N–m)

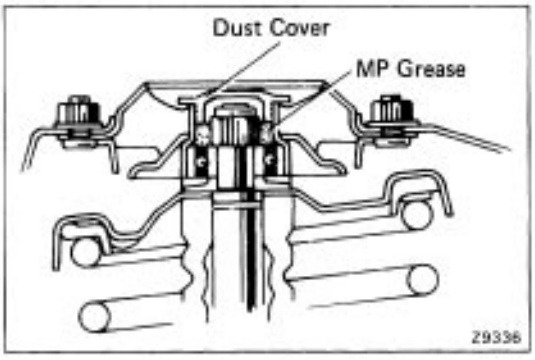

4. INSTALL DUST COVER

Pack the suspension support bearing with MP grease. Install the dust cover.

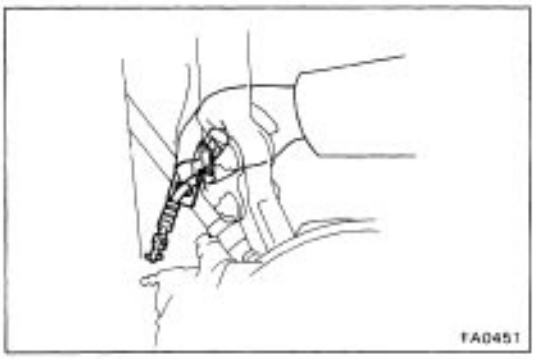

5. CONNECT FLEXIBLE HOSE

(a) Run the flexible hose through the brake hose bracket.

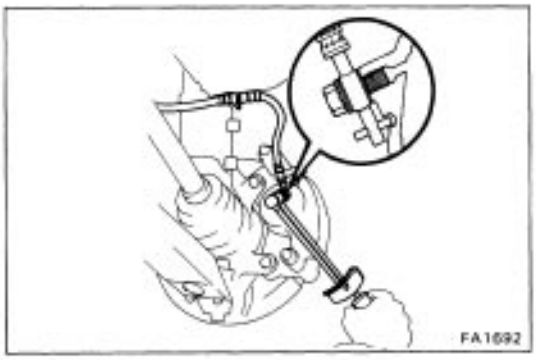

(b) Connect the flexible hose through the disc brake caliper with the union and new gaskets.

Torque: 310 kg–cm (22 ft–lb, 30 N–m)

HINT: When connecting the flexible hose to the caliper, connect it so that the peg aligns with the hole.

6. INSTALL CLIP

7. BLEED BRAKE SYSTEM

(See page BR–7**)**

8. INSPECT FRONT WHEEL ALIGNMENT

(See page SA–3**)**

Ball Joint

INSPECTION OF BALL JOINT

1. INSPECT BALL JOINT FOR EXCESSIVE LOOSENESS

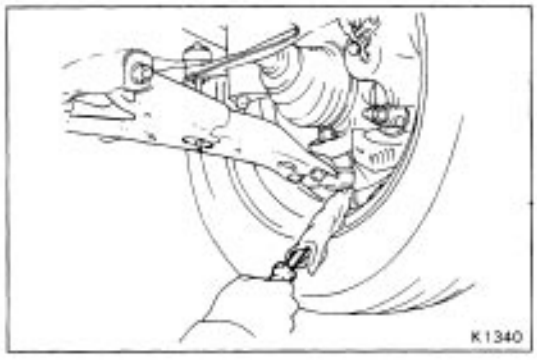

(a) Jack up the front of the vehicle and place a wooden block with a height of 180–200 mm (7.09–7.87 in.) under one front tire.

(b) Lower the jack until there is about half a load on the front coil spring. Place stands under the vehicle for safety.

(c) Make sure the front wheels are in a straight forward position and block the wheel with chocks.

(d) Move the lower arm up and down, and check that the ball joint has no play.

Ball joint vertical play: 0 mm (0 in.)

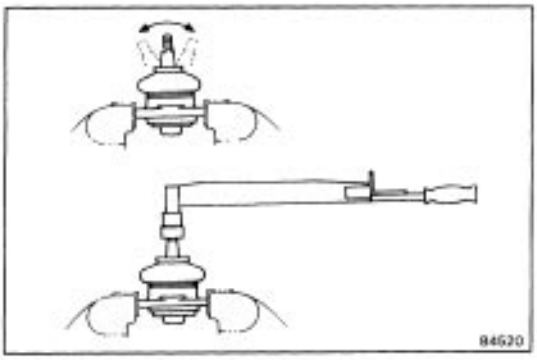

2. INSPECT BALL JOINT FOR ROTATION CONDITION

(a) Remove the ball joint. (See page SA–6)

(b) Flip the ball joint stud back and forth 5 times as shown in the illustration, before installing the nut.

(c) Using a torque meter, turn the nut continuously one turn every 2–4 seconds and take the torque reading on the fifth turn.

Torque (turning): 10 – 35 kg–cm
(9 – 30 in.–lb, 1.0 – 3.4 N–m)

If not within specification, replace the ball joint.

(d) Install the ball joint. (See page SA–9)

Lower Arm

(See page SA–28)

REMOVAL OF LOWER ARM

[Except A T (Left Side)]

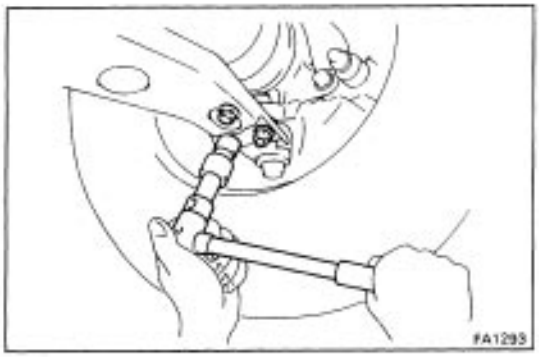

1. DISCONNECT LOWER ARM FROM STEERING KNUCKLE

Remove the bolt and two nuts holding the ball joint to the lower arm.

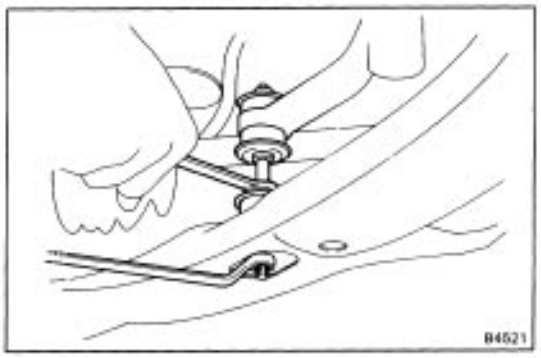

2. DISCONNECT STABILIZER BAR FROM LOWER ARM

(2WD 4A–F Engine and 4WD)

Remove the stabilizer bar nut holding the stabilizer bar to the lower arm and disconnect the stabilizer bar.

(2WD 4A–GE Engine)

Remove the lower nut of the stabilizer bar link and disconnect the stabilizer bar link from the lower arm.

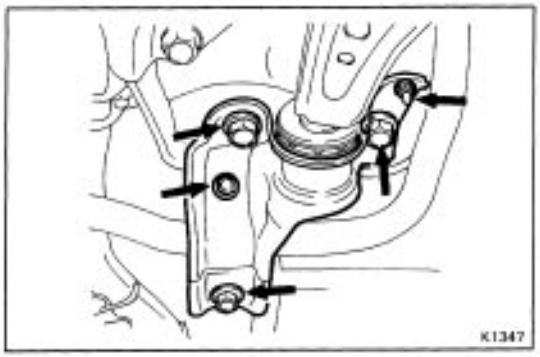

3. REMOVE LOWER ARM

(a) Loosen the lower arm front bolt.

(b) Remove the rear bracket bolts and nut.

(c) Remove the rear bracket and stabilizer bar bracket.

(d) Remove the lower arm front bolt.

(e) Remove the lower arm.

[AT (Left Side)]

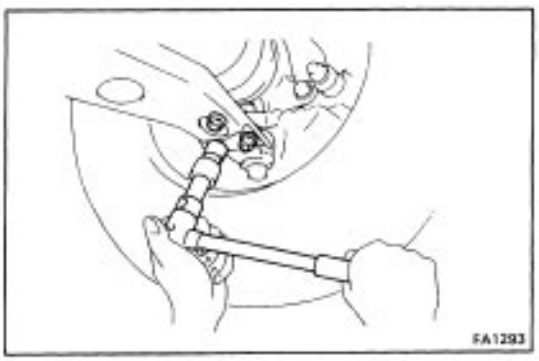

1. DISCONNECT LEFT AND RIGHT LOWER ARMS FROM STEERING KNUCKLES

2. DISCONNECT STABILIZER BAR FROM LOWER ARMS

Remove the left and right stabilizer bar nuts holding the stabilizer bar to the lower arms and disconnect the stabilizer bar.

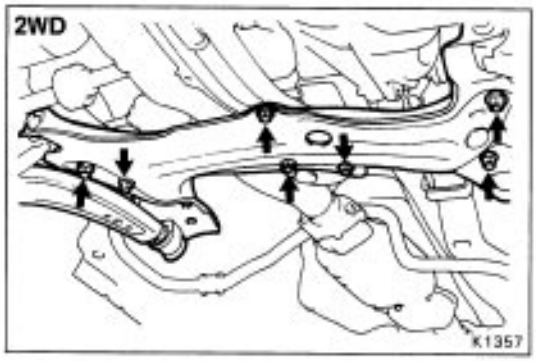

3. REMOVE LOWER ARMS WITH SUSPENSION CROSS–MEMBER

(a) Remove the left and right lower arm rear brackets.

(b) Move the stabilizer bar toward rear side, and remove the stabilizer bar bracket.

(c) Remove the six bolts and two nuts, and remove the suspension crossmember with lower arms.

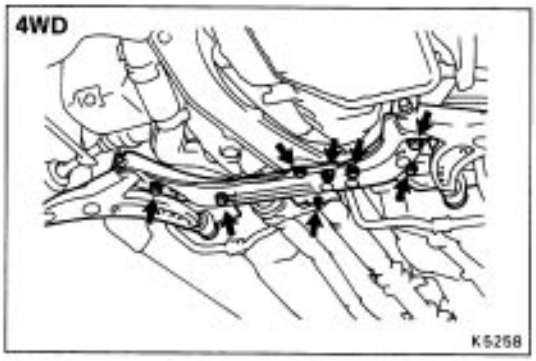

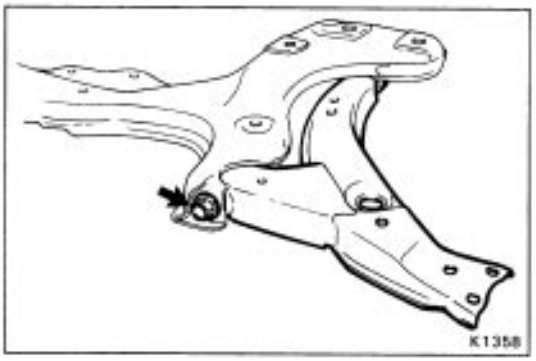

(d) Remove the lower arm from the suspension crossmember.

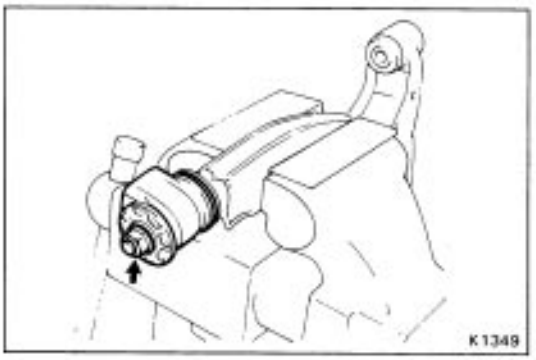

REPLACEMENT OF LOWER ARM REAR BUSHING

1. REMOVE NUT, RETAINER AND BUSHING

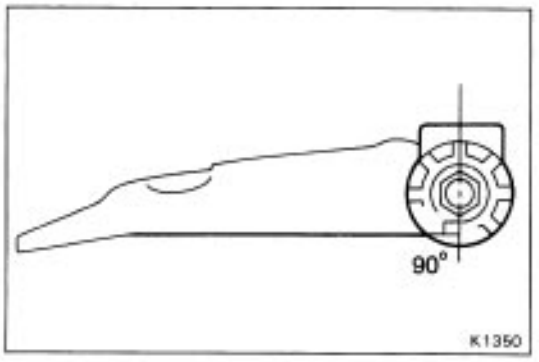

2. INSTALL NEW BUSHING AND RETAINER

Install new bushing and retainer as shown.

3. INSTALL AND TORQUE NUT

Torque: 1,400 kg–cm (101 ft–lb, 137 N–m)

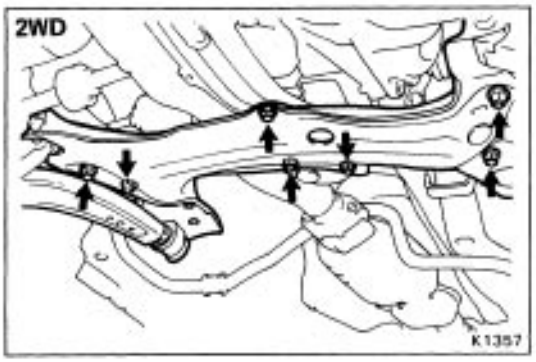

INSTALLATION OF LOWER ARM

1. INSTALL LOWER ARM

[A/T (Left Side)]

(a) Temporarily install the lower arm to the suspension crossmember with a bolt.

(b) Install the suspension crossmember with lower arm to the body (See page SA–28).

(c) Move the stabilizer bar in position and temporarily install the stabilizer bar bracket and rear bracket.

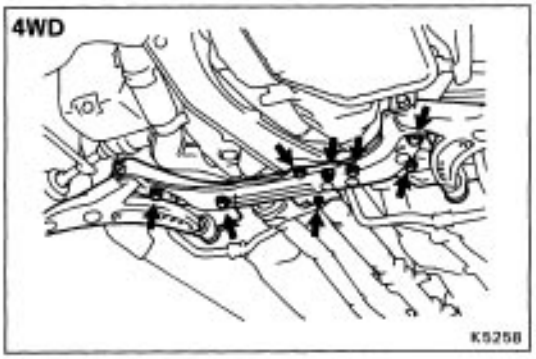

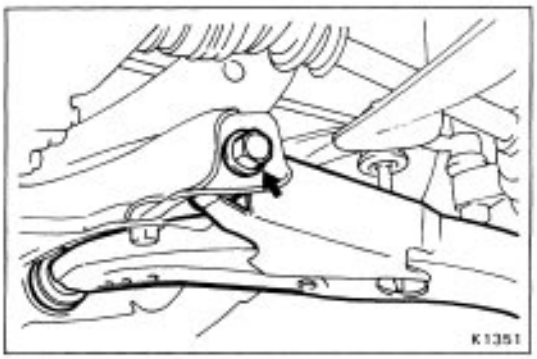

[Except A/T (Left Side)]

(a) Install the lower arm to the body.

(b) Move the stabilizer bar in position.

(c) Temporarily install and tighten the lower arm front bolt.

(d) Install the stabilizer bar bracket and rear bracket, and temporarily tighten the bolts and nut.

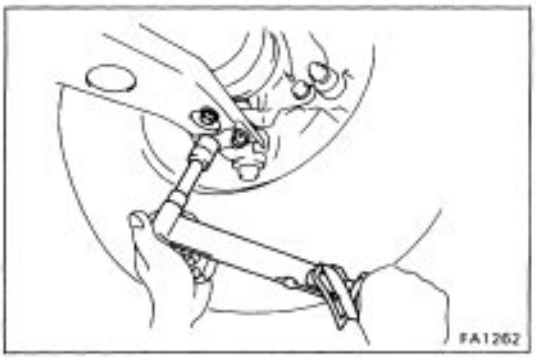

2. CONNECT LOWER ARM TO STEERING KNUCKLE

[Except AIT (Left Side)]

Install and torque the bolt and two nuts.

[A/T (Left Side)]

Install the left and right lower arm to each steering knuckle, and tighten the bolts and nuts.

Torque: 1,450 kg–cm (105 ft–lb, 142 N–m)

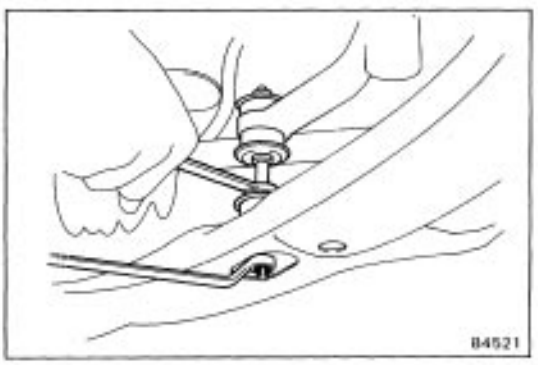

3. CONNECT STABILIZER BAR TO LOWER ARM

(2WD 4A–F Engine and 4WD)

Connect the stabilizer bar to the lower arm with the bolt and nut.

Torque the nut.

If necessary, connect another side.

Torque: 180 kg–cm (13 ft–lb, 18 N – m)

(2WD 4A–GE Engine)

Connect the stabilizer bar link to the lower arm with the nut.

Torque: 360 kg–cm (26 ft–lb, 35 N–m)

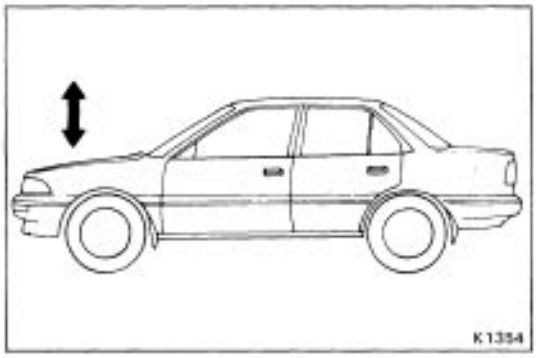

4. TORQUE FRONT LOWER ARM BOLT, REAR BRACKET BOLTS AND NUT OF LOWER ARM

(a) Remove the stands and bounce the vehicle up and down to the stabilize the suspension.

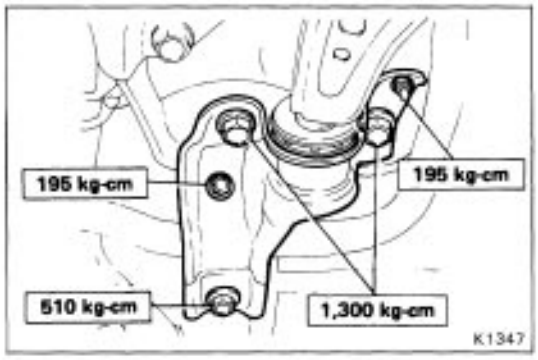

(b) Torque the front lower arm bolt, rear bracket bolts and nut.

Torque:

Lower arm front bolt 2,400 kg–cm (174 ft–lb, 235 N–m)

Rear bracket

(Lower arm side) 1,300 kg–cm (94 ft–lb, 127 N–m)

(Stabilizer bar side) 510 kg–cm (37 ft–lb, 50 N–m)

(Small bolt and nut) 195 kg–cm (14 ft–lb, 19 N–m)

5. CHECK FRONT WHEEL ALIGNMENT

(See page SA–3)

Stabilizer Bar

REMOVAL AND INSTALLATION OF STABILIZER BAR

(See page SA–28)

NOTE:

(4WD)

When removing the propeller shaft, remove the propeller shaft as an assembly.

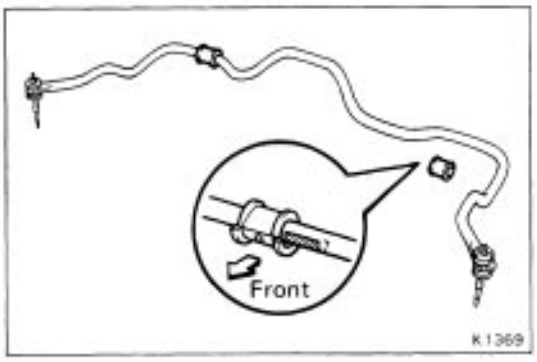

MAIN POINT OF INSTALLATION STABILIZER BAR

Install the cushion touching the line painted on the stabilizer bar so that the arrow is positioned underneath with the arrow facing toward the front of the vehicle.

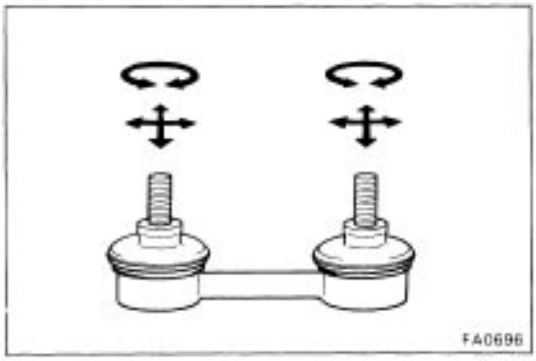

(2WD 4A–GE ENGINE) INSPECTION OF STABILIZER BAR LINK

INSPECT STABILIZER BAR LINK

Rotate ball joint arm in all directions. If the movement is not smooth and free, replace the stabilizer bar link.

REAR AXLE SHAFT (4WD)

COMPONENTS

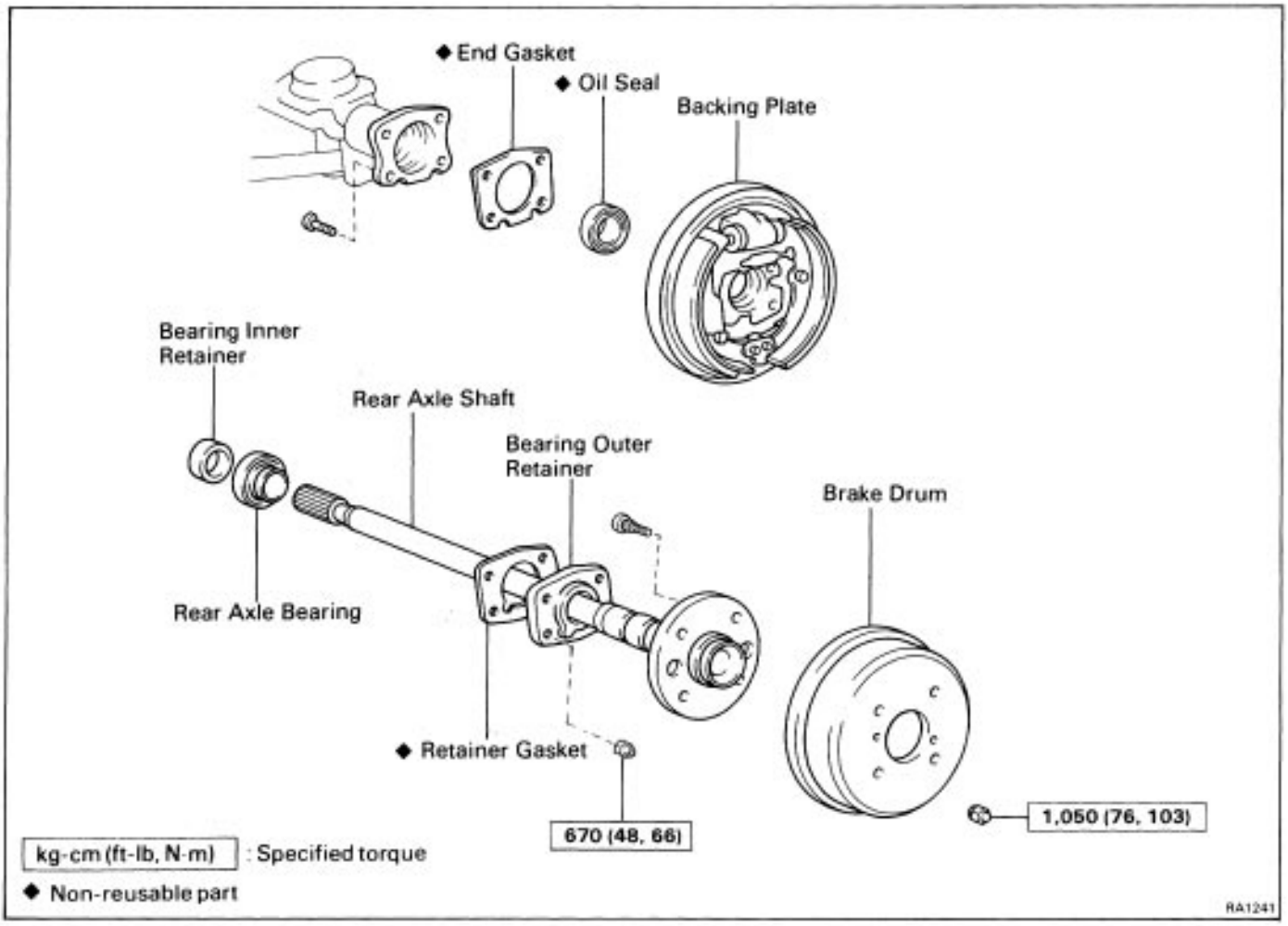

REMOVAL OF REAR AXLE SHAFT

1. REMOVE WHEEL

2. REMOVE BRAKE DRUM

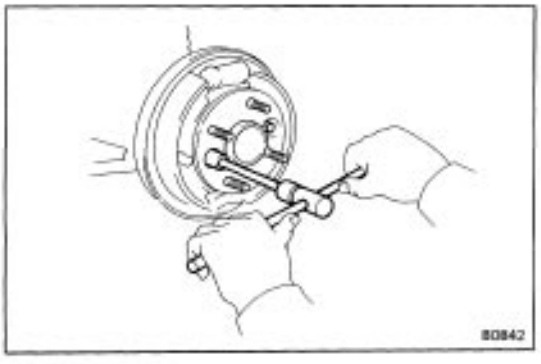

3. REMOVE FOUR BACKING PLATE MOUNTING NUTS

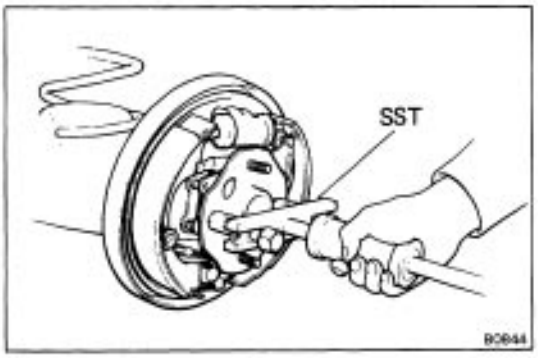

4. REMOVE REAR AXLE SHAFT

Using SST, pull out the rear axle shaft.
SST 09520–00031

NOTICE: When pulling out the rear axle shaft, be careful not to damage the oil seal.

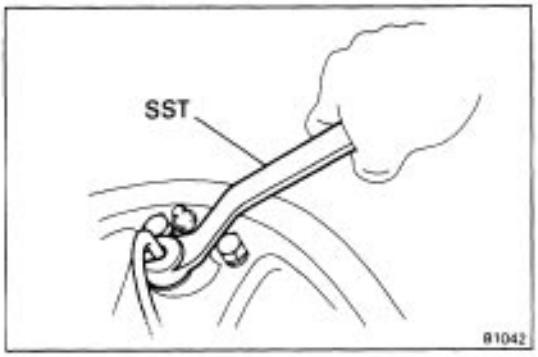

5. REMOVE END GASKET

(a) Using SST, disconnect the brake tube.
Use container to catch the brake fluid.
SST 09751–36011
(b) Remove the backing plate with the rear brake assembly.
(c) Remove the end gasket from the rear axle housing.

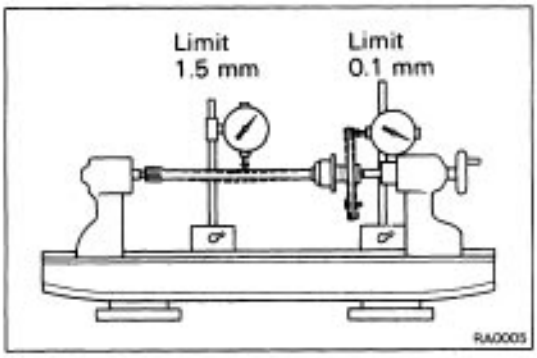

INSPECTION AND REPAIR OF REAR AXLE SHAFT COMPONENTS

1. INSPECT REAR AXLE SHAFT AND FLANGE FOR WEAR, DAMAGE OR RUNOUT

Maximum shaft runout: 1.5 mm (0.059 in.)
Maximum flange runout: 0.1 mm (0.004 in.)

If the rear axle shaft or flange are damaged or worn, or if runout is greater than maximum, replace the rear axle shaft.

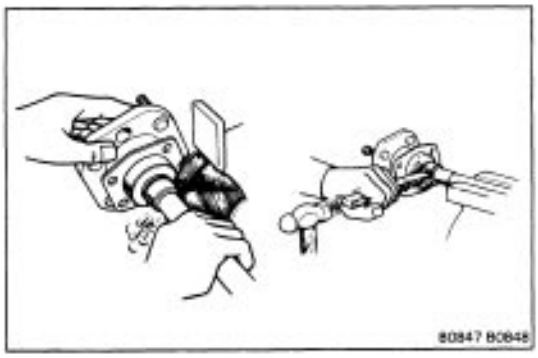

2. INSPECT REAR AXLE BEARING FOR WEAR OR DAMAGE

If the bearing is damaged or worn, replace it.

3. REMOVE BEARING INNER RETAINER

(a) Using a grinder, grind down the inner retainer.
(b) Using a hammer and chisel, cut off the retainer and remove it from the shaft.

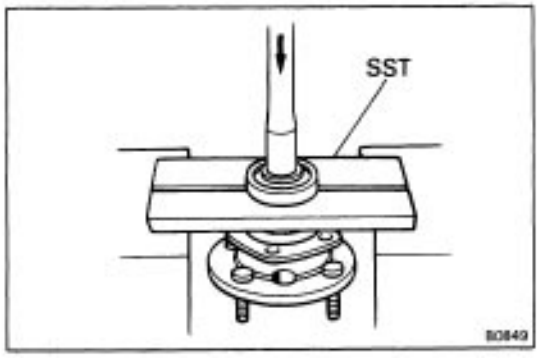

4. REMOVE BEARING FROM SHAFT

Using SST, press off the shaft from the bearing.
SST 09527–21011

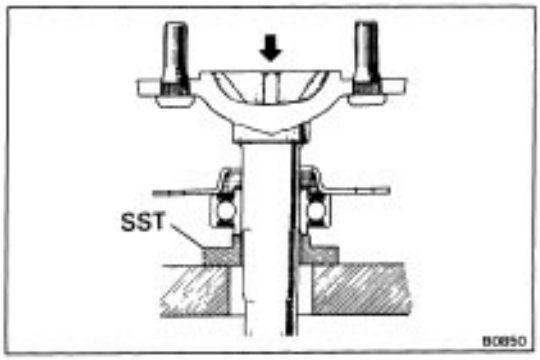

5. INSTALL BEARING OUTER RETAINER AND NEW BEARING ON SHAFT

Using SST, press on the bearing outer retainer and a new bearing.
SST 09515–21010

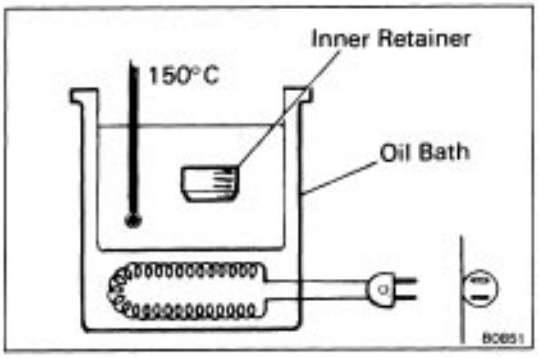

6. INSTALL BEARING INNER RETAINER ON SHAFT

(a) Heat the bearing inner retainer to about 150°C (302°F) in an oil bath.

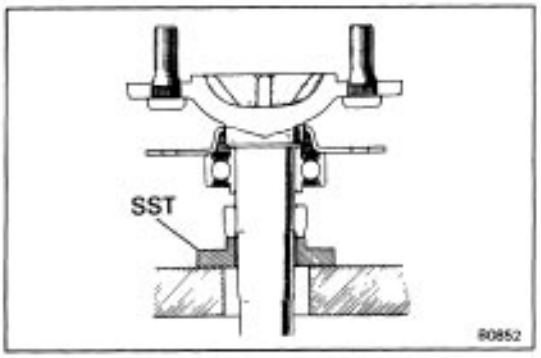

(b) Using SST, press the retainer onto the shaft while the inner– retainer is still hot.
SST 09515–21010

HINT:

- Be sure that there is no oil or grease on the rear axle shaft or retainer.
- Face the non–beveled side of the inner retainer toward the bearing.

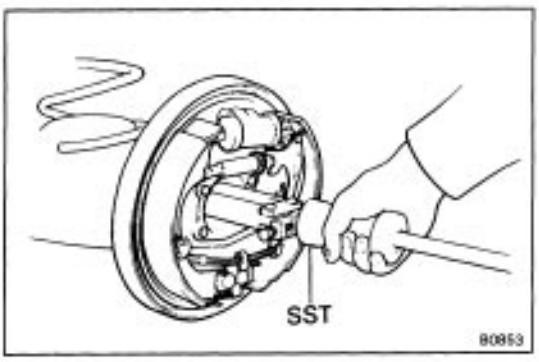

7. INSPECT OIL SEAL FOR WEAR OR DAMAGE

If the seal is damaged or worn, replace it.

8. REMOVE OIL SEAL FROM AXLE HOUSING

Using SST, remove the oil seal.
SST 09308–00010

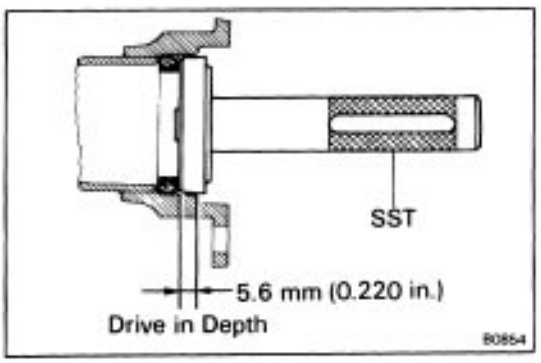

9. INSTALL NEW OIL SEAL IN AXLE HOUSING

(a) Apply MP grease to the oil seal.
(b) Using SST, drive in the oil seal to a depth of 5.6 mm (0.220 in.).
Depth: 5.6 mm (0.220 in.)
SST 09517–12010

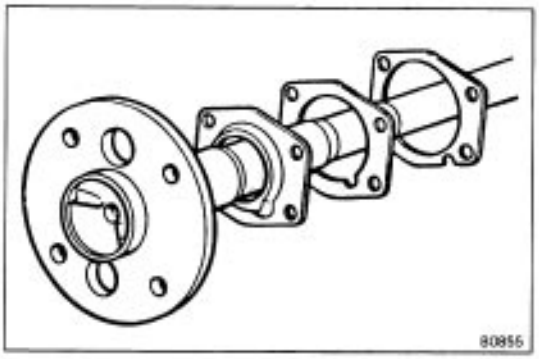

INSTALLATION OF REAR AXLE SHAFT

(See page SA–37)

1. CLEAN FLANGE OF AXLE HOUSING AND BACKING PLATE

2. APPLY LIQUID SEALER TO BOTH SIDES OF END GASKET AND RETAINER GASKET

3. PLACE END GASKET ONTO END OF AXLE HOUSING

Face the notch of gasket downward.

4. INSTALL REAR AXLE SHAFT

HINT: Align the notches of the two gaskets and bearing outer retainer with the oil hole of the backing plate.

(a) Install the backing plate to the axle housing and, using SST, connect the brake tube.
SST 09751–36011

(b) Place the retainer gasket on the axle shaft.

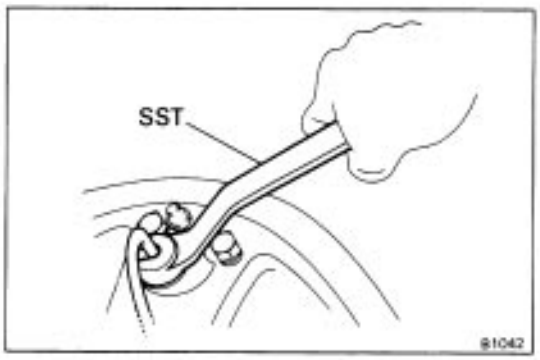

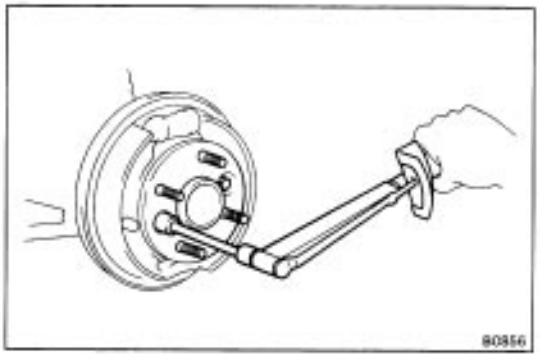

(c) Install the rear axle shaft with four new self–locking nuts.

Torque: 670 kg–cm (48 ft–lb, 66 N–m)

HINT:

- Be careful not to damage the oil seal.
- When inserting the axle shaft, be careful not to hit or deform the oil deflector inside the axle housing.

5. INSTALL BRAKE DRUM

6. BLEED BRAKE SYSTEM (See page BR–7)

7. INSTALL WHEEL

DIFFERENTIAL (4WD)
COMPONENTS

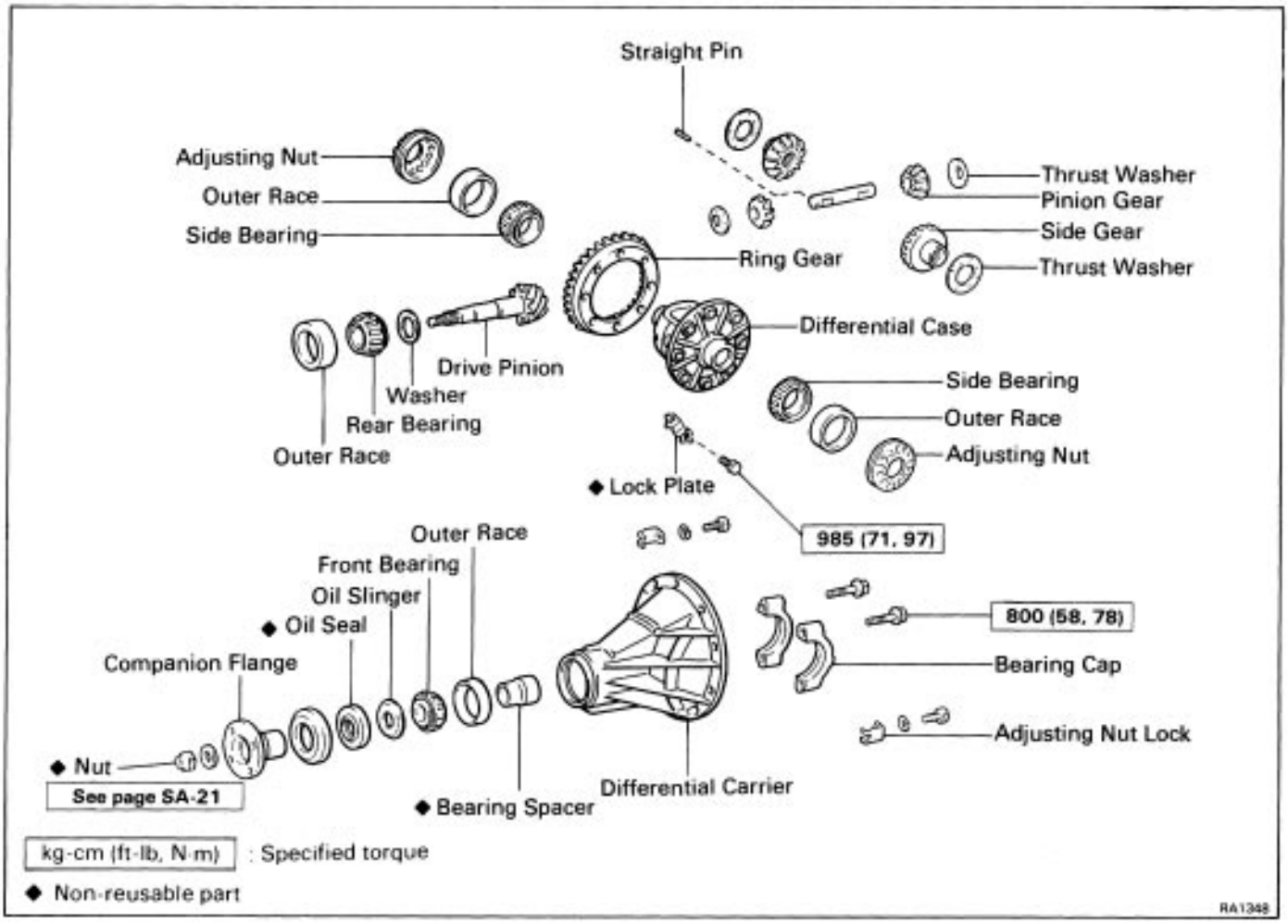

ON–VEHICLE REPLACEMENT OF OIL SEAL

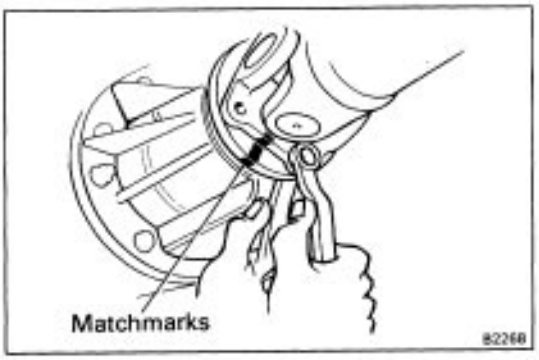

1. DISCONNECT PROPELLER SHAFT FROM DIFFERENTIAL

(a) Put matchmarks on the flanges.

(b) Remove the four bolts and nuts.

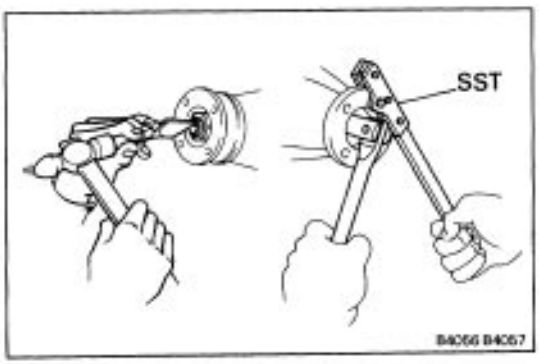

2. REMOVE COMPANION FLANGE

(See step 7 on page SA–44)

SST 09330–00021 and 09557–22022 (09557–22030)

3. REMOVE OIL SEAL AND OIL SLINGER

(See step 8 on page SA–44)

SST 09308–10010

4. REMOVE FRONT BEARING AND BEARING SPACER

(See step 9 on page SA–44)

SST 09556–22010

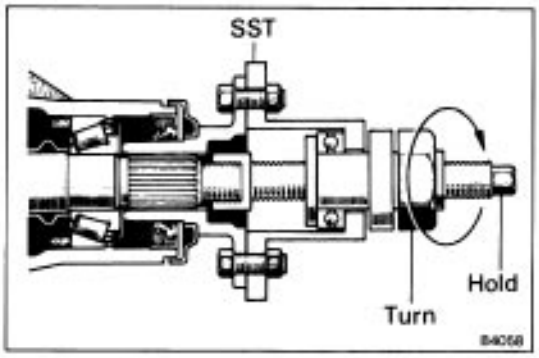

5. INSTALL NEW BEARING SPACER AND FRONT BEARING
(See step 9 on page SA–52)

6. INSTALL OIL SLINGER AND NEW OIL SEAL
(See step 10 on page SA–53)
SST 09554–22010

7. INSTALL COMPANION FLANGE
(See step 11 on page SA–53)
SST 09330–00021 and 09557–22022
(09557–2203C

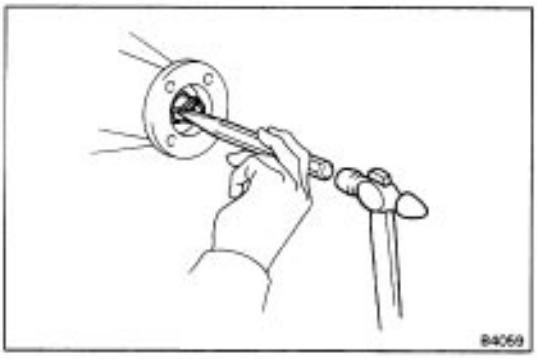

8. ADJUST FRONT BEARING PRELOAD
(See step 12 on page SA–53)

9. STAKE DRIVE PINION NUT

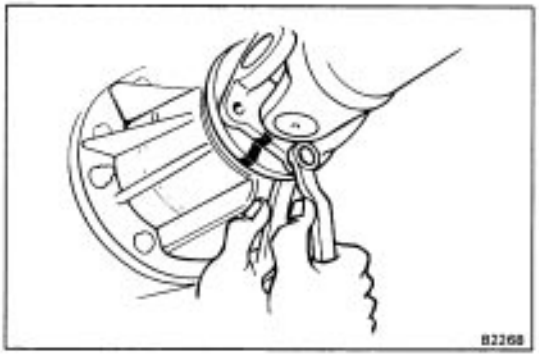

10. CONNECT PROPELLER SHAFT FLANGE TO COMPANION FLANGE
(a) Align the matchmarks on the flanges and connect the flanges with four bolts and nuts.
(b) Torque the four bolts and nuts.
Torque: 380 kg–cm (27 ft–lb, 37 N–m)

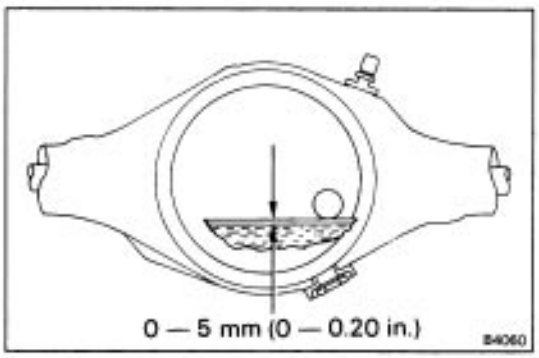

11. CHECK DIFFERENTIAL OIL LEVEL
Fill with hypoid gear oil if necessary.
Oil grade: API GL–5 hypoid gear oil
Viscosity: Above –18˚C (0˚F) SAE 90
Below –18˚C (0˚F) SAE 80W–90 or 80W
Capacity: 1.1 liters (1.2 US qts, 1.0 Imp.qts)

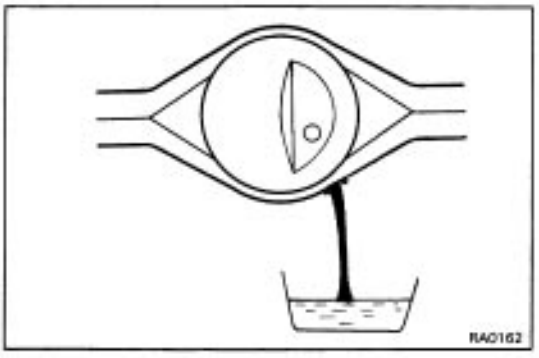

REMOVAL OF DIFFERENTIAL

(See page SA–41)

1. REMOVE DRAIN PLUG AND DRAIN DIFFERENTIAL OIL

2. REMOVE REAR AXLE SHAFT
(See page SA–37)

3. DISCONNECT PROPELLER SHAFT FROM DIFFERENTIAL
(See page SA–41)

4. REMOVE DIFFERENTIAL CARRIER ASSEMBLY

DISASSEMBLY OF DIFFERENTIAL

(See page SA–41)

HINT: If the differential is noisy, perform the following pre–inspection before disassembly to determine the cause of the noise.

If the differential has severe problems, disassemble and repair it as necessary.

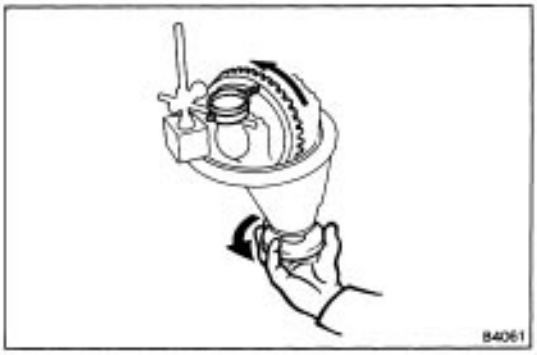

1. CHECK RING GEAR RUNOUT

If the runout is greater than maximum, install a new ring gear.

Maximum runout: 0.07 mm (0.0028 in.)

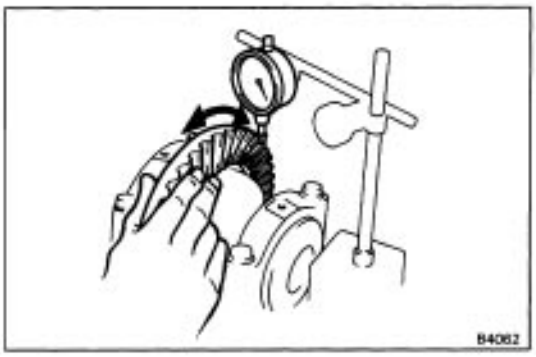

2. CHECK RING GEAR BACKLASH

If the backlash is not within specifications, adjust the side bearing preload or repair as necessary.

(See step 5 on page SA–50)

Backlash: 0.13 – 0.18 mm (0.0051 – 0.0071 in.)

3. INSPECT TOOTH CONTACT BETWEEN RING GEAR AND DRIVE PINION

(See step 6 on page SA–51)

Note the tooth contact position.

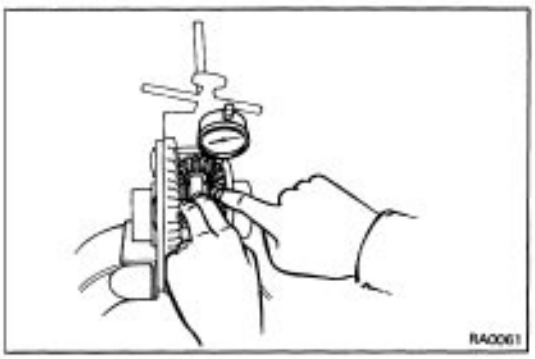

4. CHECK SIDE GEAR BACKLASH

Measure the side gear backlash while holding one pinion gear toward the case.

Standard backlash:

0.05 – 0.20 mm (0.0020 – 0.0079 in.)

If the backlash is not within specification, install the correct thrust washers.

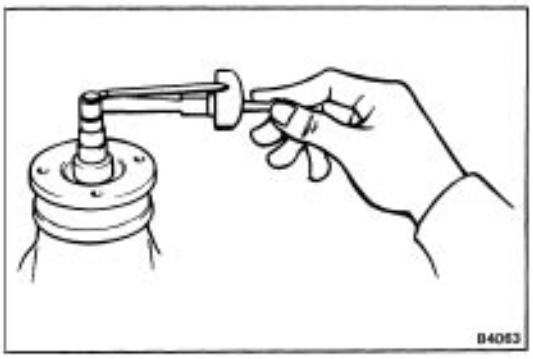

5. MEASURE DRIVE PINION PRELOAD

Using a torque meter, measure the preload of the backlash between the drive pinion and ring gear.

Preload: 5 – 8 kg–cm

(4.3 – 6.9 in.–lb, 0.5 – 0.8 N–m)

6. CHECK TOTAL PRELOAD

Using a torque meter, measure the total preload.

Total preload:

In addition to drive pinion preload

3 – 5 kg–cm (2.6 – 4.3 in.–lb, 0.3 – 0.5 N–m)

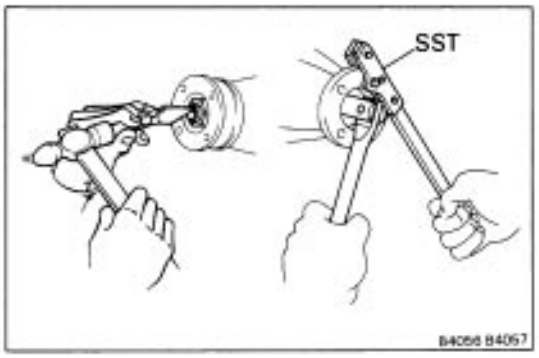

7. REMOVE COMPANION FLANGE

(a) Using a hammer and chisel, loosen the staked part of the nut.

(b) Using SST to hold the flange, remove the nut.
SST 09330–00021

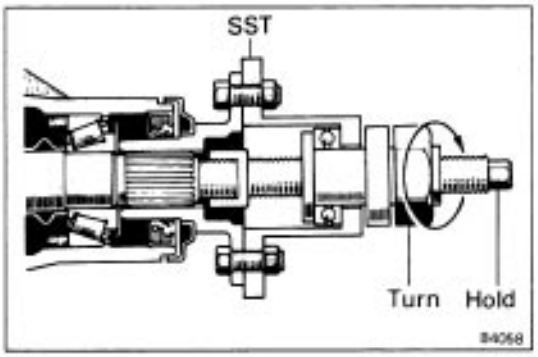

(c) Using SST, remove the companion flange.
SST 09557–22022 (09557–22030)

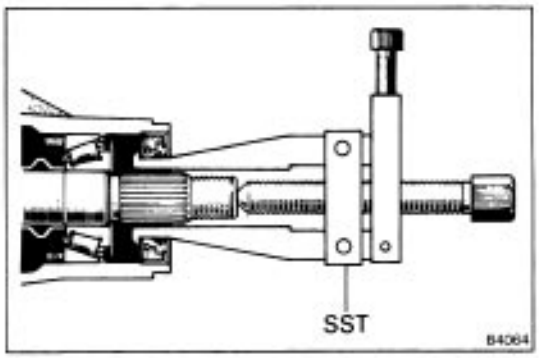

8. REMOVE OIL SEAL AND OIL SLINGER

(a) Using SST, remove the oil seal from the housing.
SST 09308–10010

(b) Remove the oil slinger.

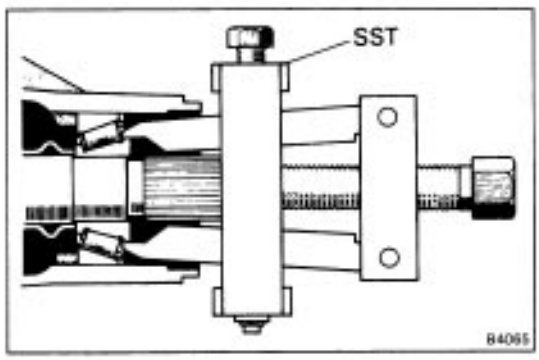

9. REMOVE FRONT BEARING AND BEARING SPACER

(a) Using SST, remove the front bearing from the drive pinion.
SST 09556–22010

(b) Remove the bearing spacer.
If the front bearing is damaged or worn, replace the bearing.

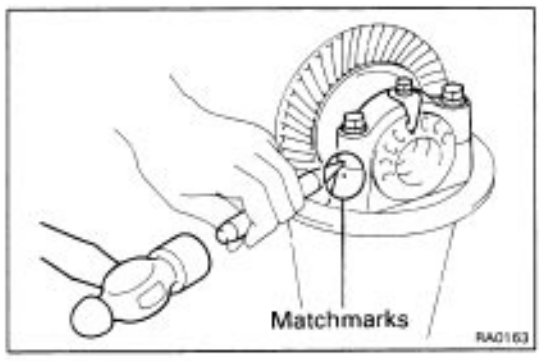

10. REMOVE DIFFERENTIAL CASE AND RING GEAR

(a) Place matchmarks on the bearing cap and differential carrier.

(b) Remove the two adjusting nut locks.

(c) Remove the two bearing caps and two adjusting nuts.

(d) Remove the bearing outer races.

(e) Remove the differential case from the carrier.

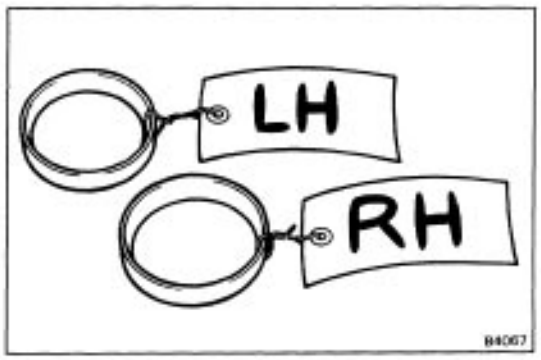

HINT: Tag the disassembled parts to show the location for reassembly.

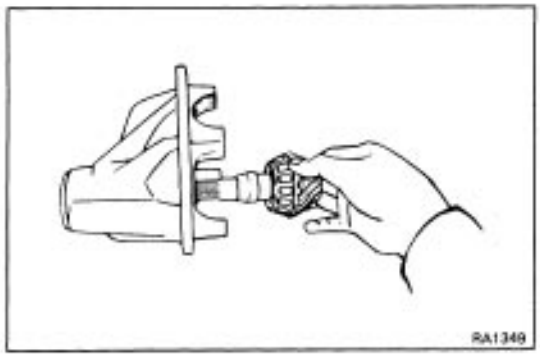

11. REMOVE DRIVE PINION FROM DIFFERENTIAL CARRIER

INSPECTION AND REPLACEMENT OF DIFFERENTIAL COMPONENTS

1. REPLACE DRIVE PINION REAR BEARING

(a) Using SST and a press, pull out the rear bearing from the drive pinion.
SST 09950–00020

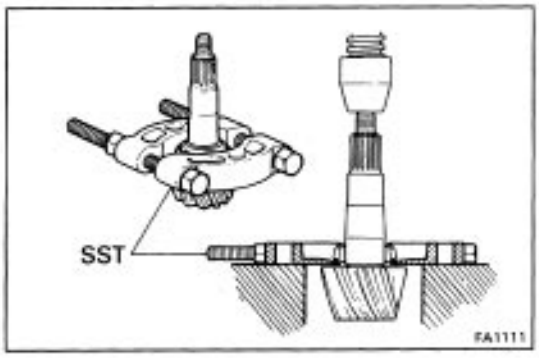

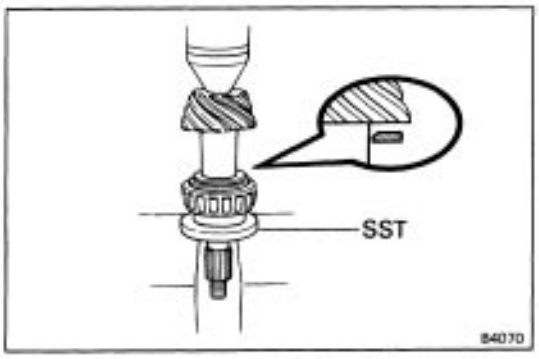

(b) Install the shim on the drive pinion with the chamfered end facing the pinion gear.

(c) Using SST and a press, press the reused shim and new rear bearing on the drive pinion.
SST 09506–30012

2. REPLACE DRIVE PINION FRONT AND REAR BEARING OUTER RACE

(a) Using a brass bar and a hammer, drive out the outer race.

(b) Using SST and a press, press in a new outer race.
SST Front 09608–30012
(09608–00060,09608–04020)
Rear 09608–30012
(09608–04020, 09608–04100)

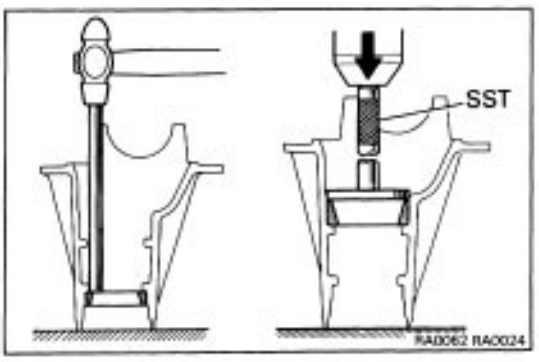

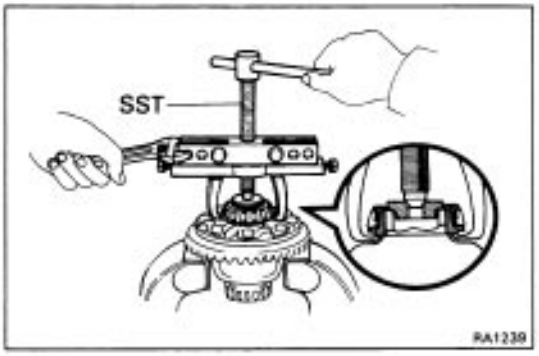

3. REMOVE SIDE BEARING FROM DIFFERENTIAL CASE

Using SST, pull the side bearing from the differential case.

SST 09950–20017

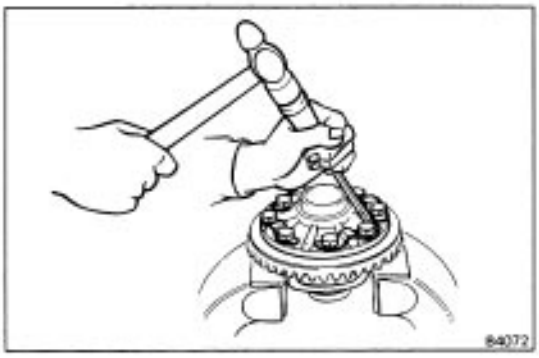

4. REMOVE RING GEAR

(a) Remove the ring gear set bolts and lock plates.

(b) Place matchmarks on the ring gear and differential case.

(c) Using a plastic or copper hammer, tap on the ring gear to separate it from the differential case.

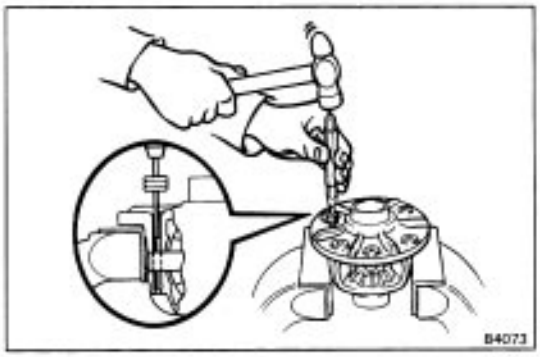

5. DISASSEMBLE DIFFERENTIAL CASE

Using a hammer and punch, drive out the straight pin. Remove the pinion shaft, two pinion gears, two side gears and four thrust washers.

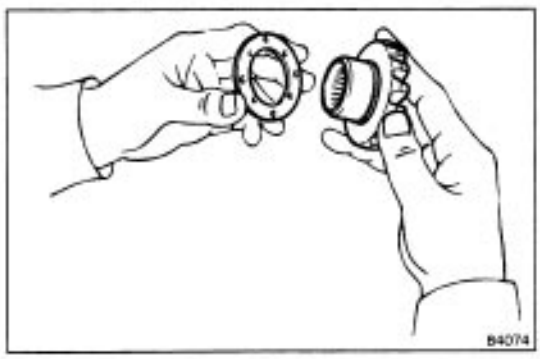

6. ASSEMBLE DIFFERENTIAL CASE

(a) Install the side gear thrust washers to the side gears.

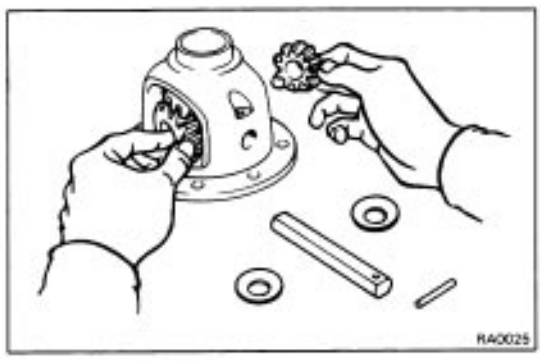

(b) Install the side gears with the thrust washers, pinion gears, pinion gear thrust washers and pinion shaft.

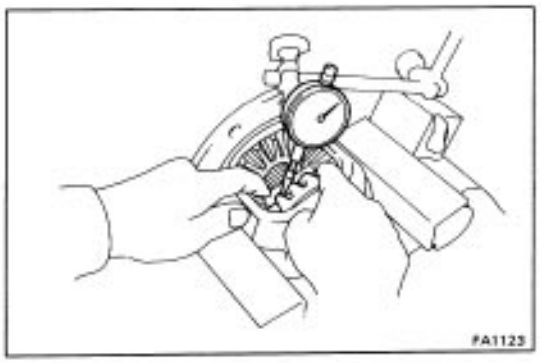

(c) Check the side gear backlash. Measure the side gear backlash while holding one pinion gear toward the case.

Standard backlash: 0.05 – 0.20 mm (0.0020 – 0.0079 in.)

If the backlash is not within specification, replace the thrust washers.

Thrust washer thickness	mm (in.)
0.95 (0.0374)	1.10 (0.0433)
1.00 (0.0394)	1.15 (0.0453)
1.05 (0.0413)	1.20 (0.0472)

HINT: Select the same sized thrust washers for both the left and right sides.

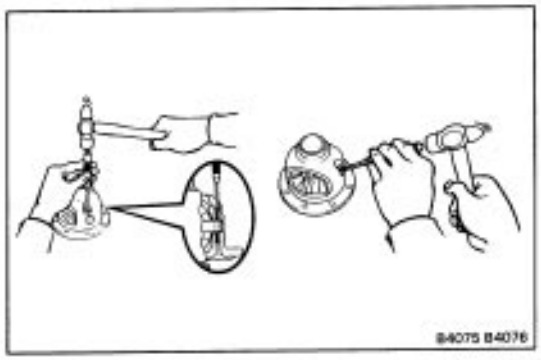

(d) Install the straight pin**.**

- Using a hammer and punch, drive the straight pin through the case and hole in the pinion shaft.
- Stake the pin and differential case.

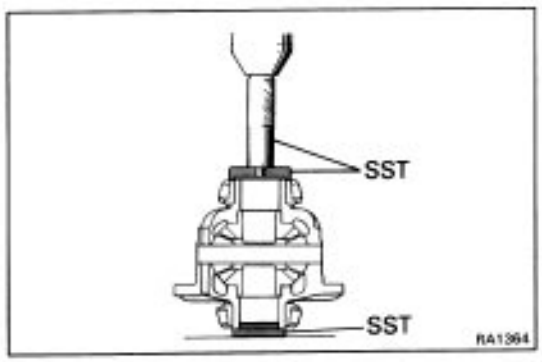

7. INSTALL NEW SIDE BEARING

Using SST, press in a new side bearing onto the differential case.
SST 09550–10012
(09252–10010, 09556–10010, 09560–10010)

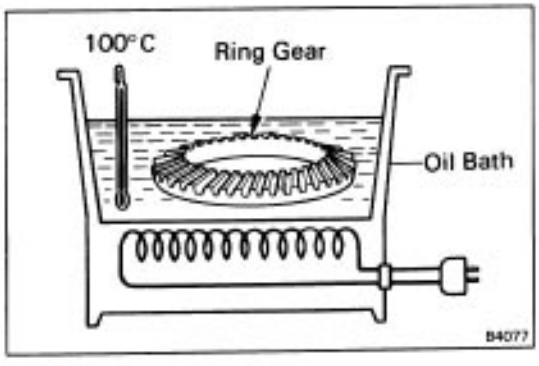

8. INSTALL RING GEAR ON DIFFERENTIAL CASE

(a) Clean the contact surface of the differential case.
(b) Heat the ring gear to about 100˚C (212˚F) in an oil bath.
NOTICE: Do not heat the ring gear above 110 ˚ C (230 ˚ F).
(c) Clean the contact surface of the ring gear with cleaning solvent.
(d) Then quickly install the ring gear on the differential case.

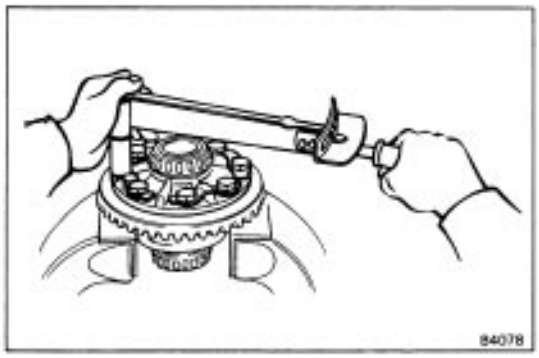

(e) Align the matchmarks on the ring gear and differential case.
(f) Coat the ring gear set bolts with gear oil.
(g) Temporarily install the lock plates and set bolts.
(h) After the ring gear cools down enough, tighten the set bolts uniformly and a little at a time.

Torque: 985 kg–cm (71 ft–lb, 97 N–m)

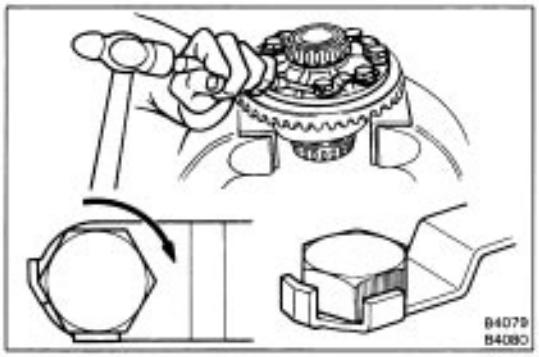

(i) Using a hammer and drift punch, stake the lock plates.

HINT: Stake one claw flush with the flat surface of the nut. For the claw contacting the protruding portion of the nut, stake only the half on the tightening side.

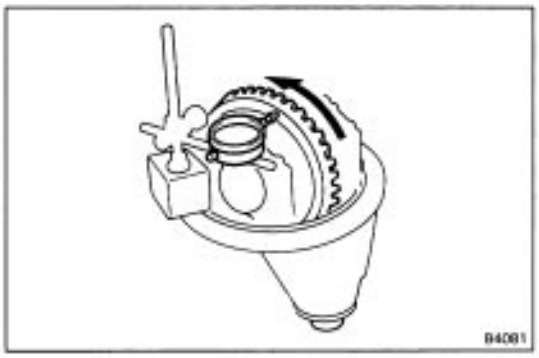

(j) Check the ring gear runout.

Maximum runout: 0.07 mm (0.0028 in.)

Install the differential case onto the carrier and tighten the adjusting nut just to where there is no play in the bearing.

ASSEMBLY OF DIFFERENTIAL

(See page SA–41)

1. TEMPORARILY ADJUST DRIVE PINION PRELOAD

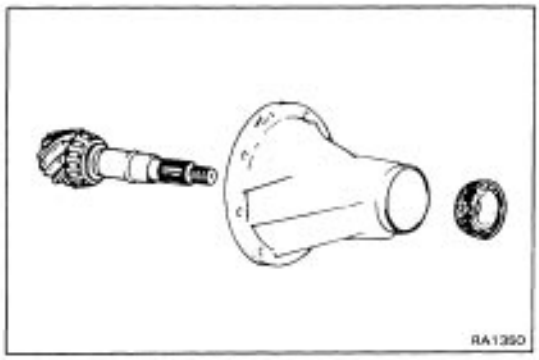

(a) Install the following parts:

- Drive pinion
- Front bearing

HINT: Assemble the spacer, oil slinger and oil seal after adjusting the gear contact pattern.

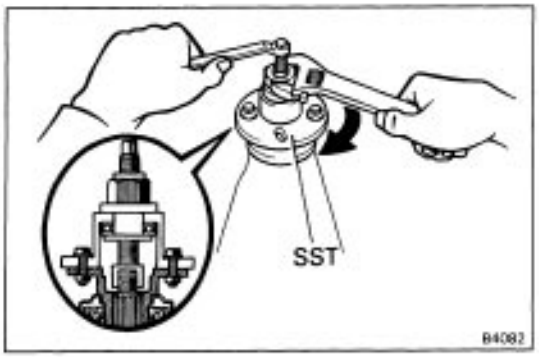

(b) Install the companion flange with SST.
SST 09557–22022 (09557–22030)

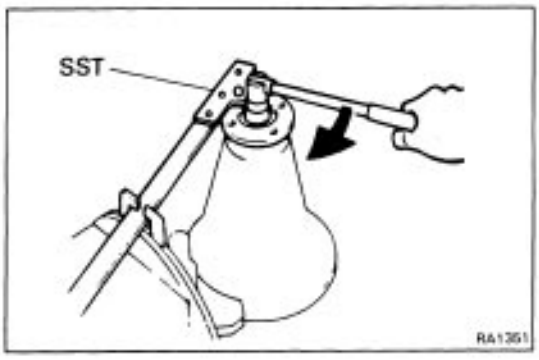

(c) Adjust the drive pinion preload by tightening the companion flange nut. Using SST to hold the flange, tighten the nut.
SST 09330–00021

NOTICE: As there is no spacer, tighten a little at a time, being careful not to overtighten.

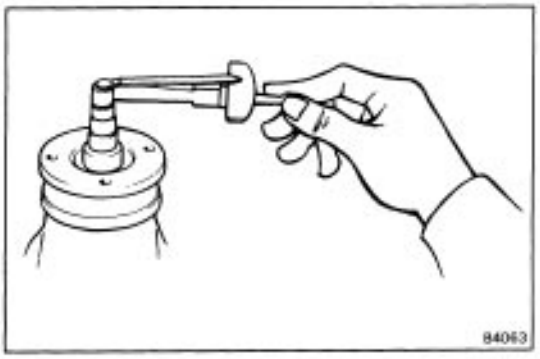

(d) Using a torque meter, measure the preload.

Preload:

New bearing

10 – 16 kg–cm

(8.7 – 13.9 in.–lb, 1.0 – 1.6 N–m)

Reused bearing

5 – 8 kg–cm

(4.3 – 6.9 in.–lb, 0.5 – 0.8 N–m)

2. INSTALL DIFFERENTIAL CASE IN CARRIER

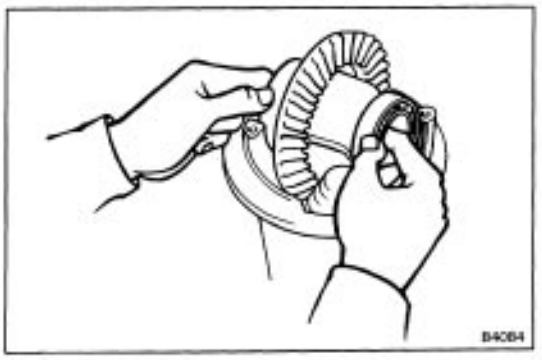

(a) Place the bearing outer races on their respective bearings. Make .sure the left and right outer races are not interchanged.

(b) Install the case in the carrier.

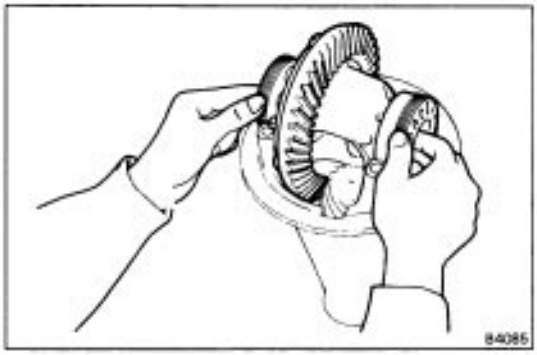

3. INSTALL ADJUSTING NUTS

Install the adjusting nuts on their respective carrier, making sure the nuts are threaded properly.
HINT: Make sure that there is backlash between the ring gear and drive pinion.

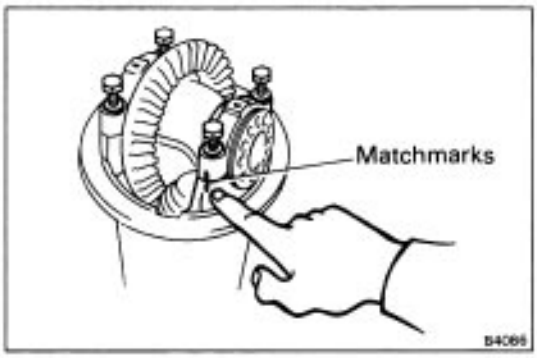

4. INSTALL BEARING CAPS

Align the matchmarks on the cap and carrier. Screw in the two bearing cap bolts two or three turns and press down the bearing cap by hand.
HINT: If the bearing cap does not fit tightly on the carrier, the adjusting nut threads are not threaded properly. Reinstall adjusting nuts if necessary.

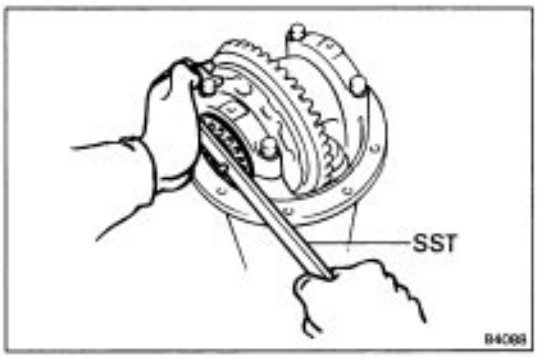

5. ADJUST SIDE BEARING PRELOAD

(a) Tighten the bearing cap bolts until the spring washers are slightly compressed.
(b) Using SST, tighten the adjusting nut on the ring gear side until the ring gear has a backlash of about 0.2 mm (0.008 in.).
SST 09504–00011

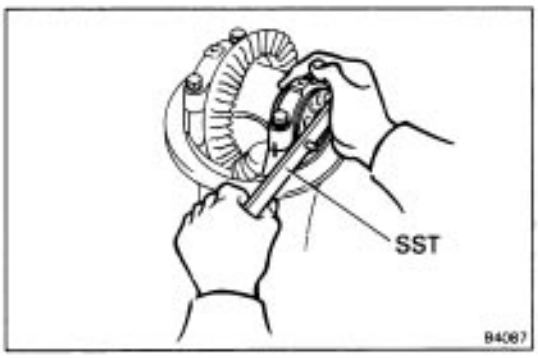

(c) Using SST, firmly tighten the adjusting nut on the drive pinion side.
(d) Check the ring gear backlash.
If tightening the adjusting nut creates ring gear backlash, loosen the nut so that backlash is eliminated.

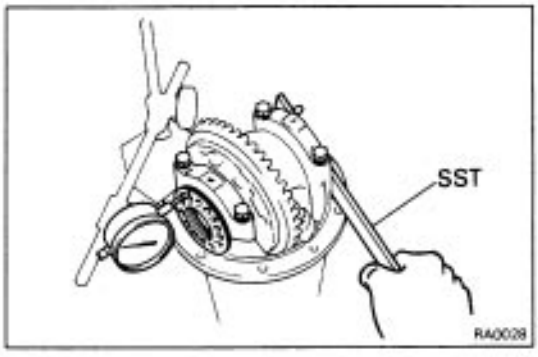

(e) Place a dial indicator on the top of the adjusting nut on the ring gear side.
(f) Adjust the side bearing for zero preload by tightening the other adjusting nut until the pointer on the indicator begins to move.

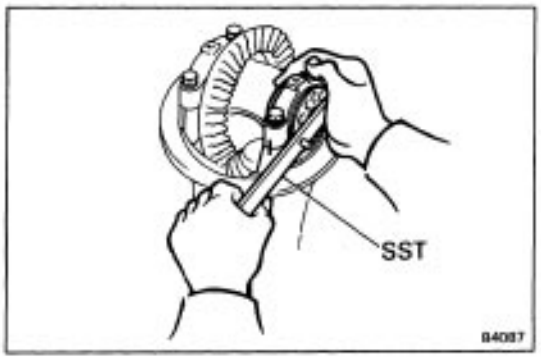

(g) Tighten the adjusting nut 1 — 1 1/2 notches from the zero preload position.

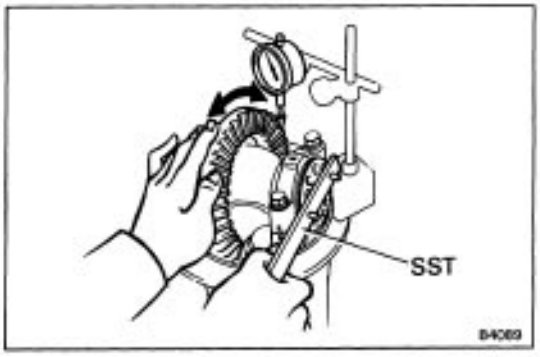

(h) Using a dial indicator, adjust the ring gear backlash until it is within specification.

Backlash: 0.13 – 0.18 mm (0.0051 – 0.0071 in.)

HINT: The backlash is adjusted by turning the left and right adjusting nuts equal amounts. For example, loosen the nut on the left side one notch and tighten the nut on the right side one notch.

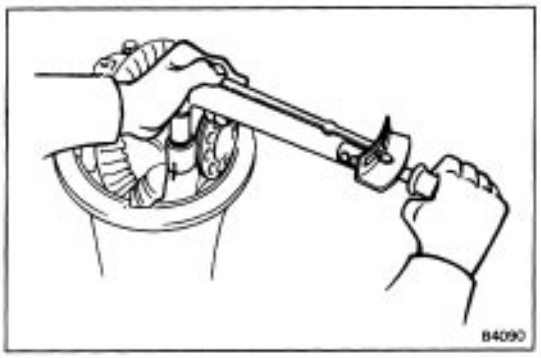

(i) Torque the bearing cap bolts.

Torque: 800 kg–cm (58 ft–lb, 78 N– m)

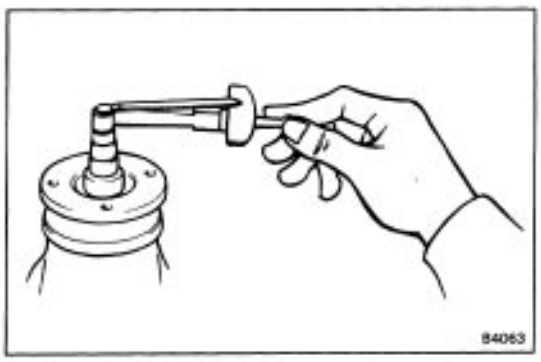

(j)Recheck the ring gear backlash.

(k)Using a torque meter, measure the total preload.

Total preload:

In addition to drive pinion preload

3–5kg–cm(2.6–4.3in.–lb,0.3–0.5 N–m)

Backlash: 0.13 – 0.18 mm (0.0051 – 0.0071 in.)

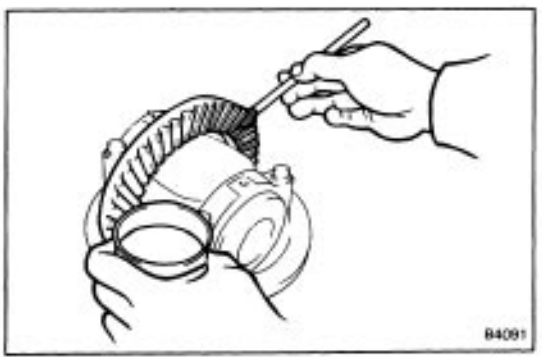

6. INSPECT TOOTH CONTACT BETWEEN RING GEAR AND DRIVE PINION

(a) Coat 3 or 4 teeth at three different positions on the ring gear with red lead.

(b) Hold the companion flange firmly and rotate the ring gear in both directions.

(c) Inspect the tooth pattern.

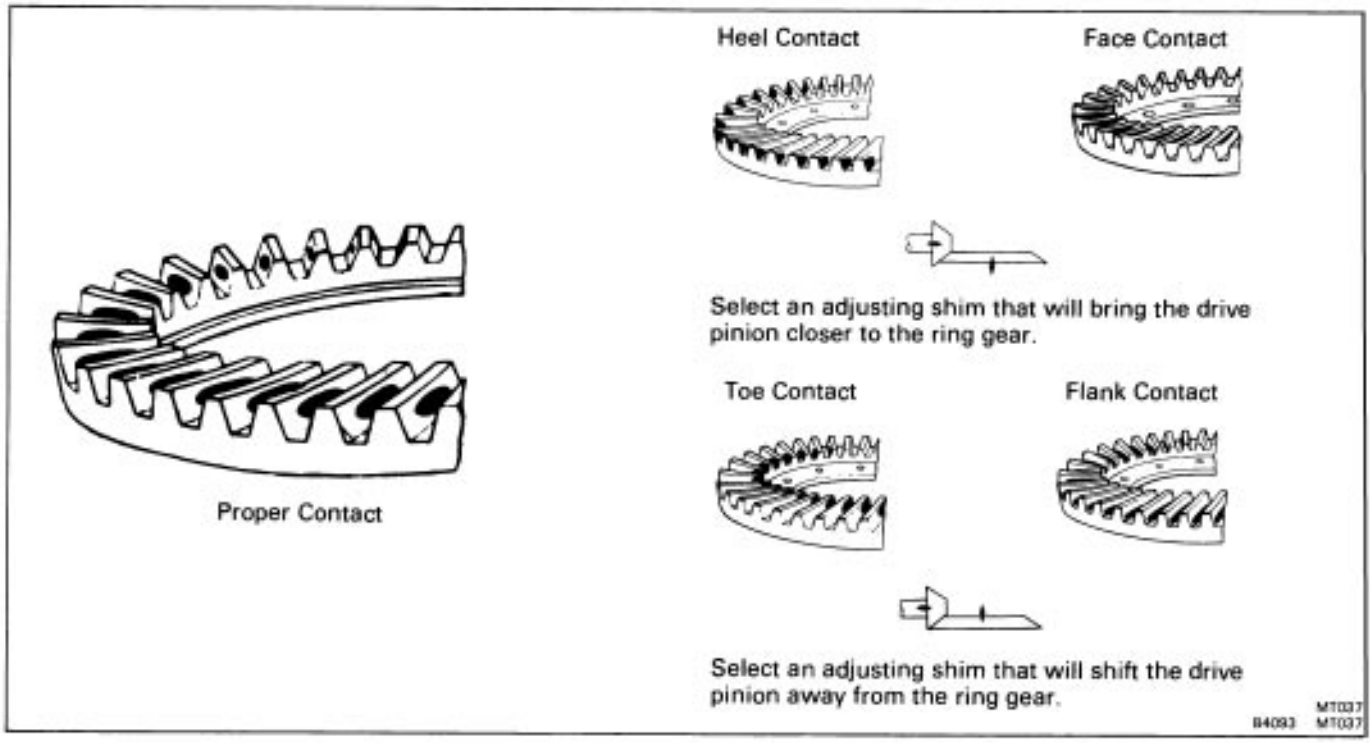

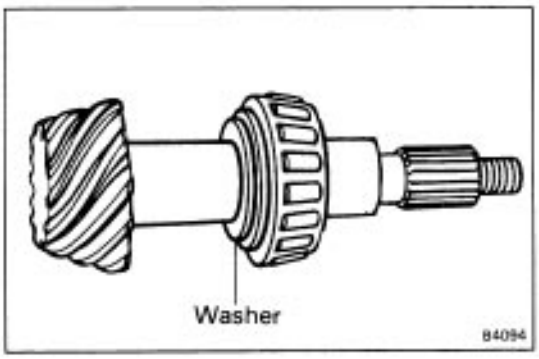

If the teeth are not contacting properly, use the following chart to select a proper washer for correction.

Washer thickness mm (in.)	
2.27 (0.0894)	2.51 (0.0988)
2.30 (0.0906)	2.54 (0.1000)
2.33 (0.0917)	2.57 (0.1012)
2.36 (0.0929)	2.60 (0.1024)
2.39 (0.0941)	2.63 (0.1035)
2.42 (0.0953)	2.66 (0.1047)
2.45 (0.0965)	2.69 (0.1059)
2.48 (0.0976)	

7. REMOVE COMPANION FLANGE
(See)8step 7 on page SA–44B
8. REMOVE FRONT BEARING
(See step 9 on page SA–44)

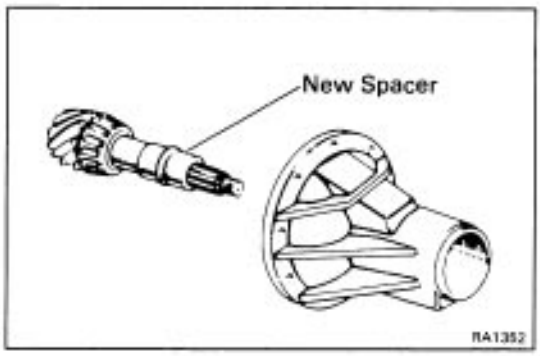

9. INSTALL NEW BEARING SPACER AND FRONT BEARING
(a) Install a new bearing spacer on the shaft.
(b) Install the front bearing on the shaft.

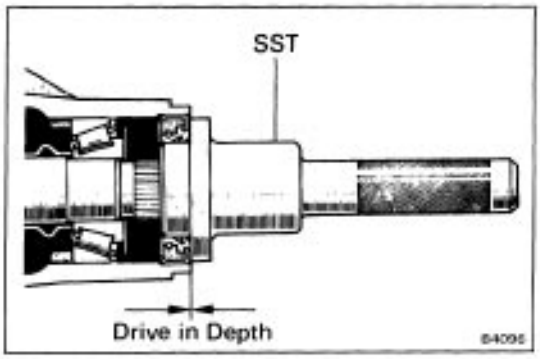

10. INSTALL OIL SLINGER AND NEW OIL SEAL

(a) Install the oil slinger facing as shown.

(b) Using SST, drive in a new oil seal.

Oil seal drive in depth: 4.0 mm (0.157 in.)

SST 09554–22010

(c) Apply MP grease to the oil seal lip.

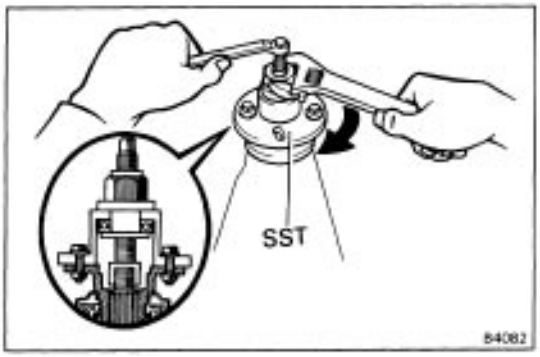

11. INSTALL COMPANION FLANGE

(a) Install the companion flange with SST.

SST 09557–22022 (09557–22030)

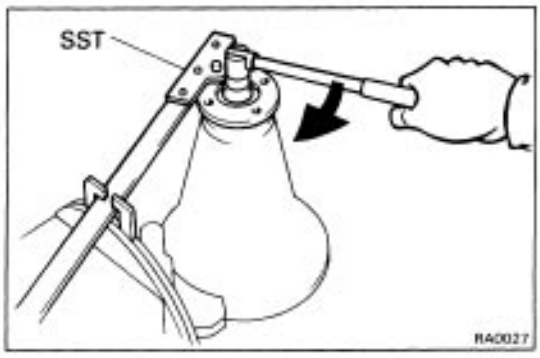

(b) Coat the threads of a new nut with MP grease.

(c) Using SST to hold the flange, tighten the nut.

SST 09330–00021

Torque: 1,100 kg–cm (80 ft–lb, 108 N–m)

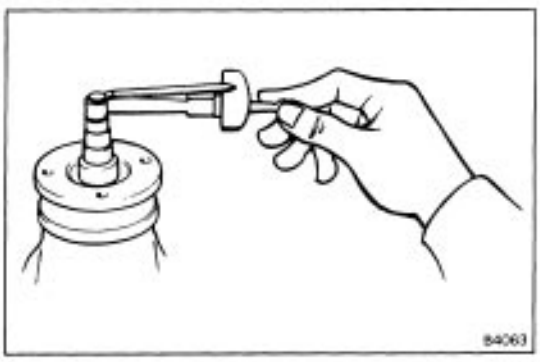

12. ADJUST FRONT BEARING PRELOAD

Using a torque meter, measure the preload of the backlash between the drive pinion and ring gear.

Preload :

New bearing

10 – 16 kg–cm

(8.7 – 13.9 in.–lb, 1.0 – 1.6 N–m)

Reused bearing

5 – 8 kg–cm

(4.3 – 6.9 in.–lb, 0.5 – 0.8 N–m)

(a) If preload is greater than specification, replace the bearing spacer.

(b) If preload is less than specification, re–tighten the nut 130 kg–cm (9 ft–lb, 13 N–m) at a time until the specified preload is reached.

If the maximum torque is exceeded while retightening the nut, replace the bearing spacer and repeat the preload procedure. Do not back off pinion nut to reduce the preload.

Maximum torque: 2,400 kg–cm (174 ft–lb, 235 N–m)

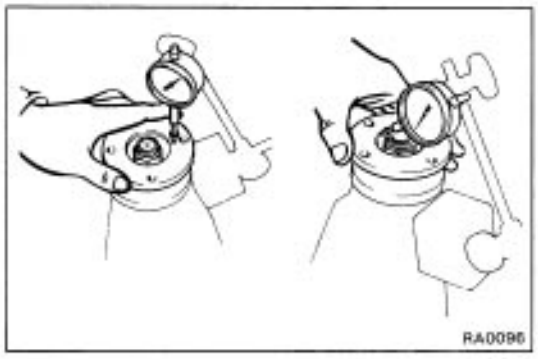

13. CHECK DEVIATION OF COMPANION FLANGE

Maximum radial deviation:

0.10 mm (0.0039 in.)

Maximum lateral deviation:

0.10 mm (0.0039 in.)

HINT: When measure the lateral deviation, measure at 30 mm (1.18 in.) from the rotating center.

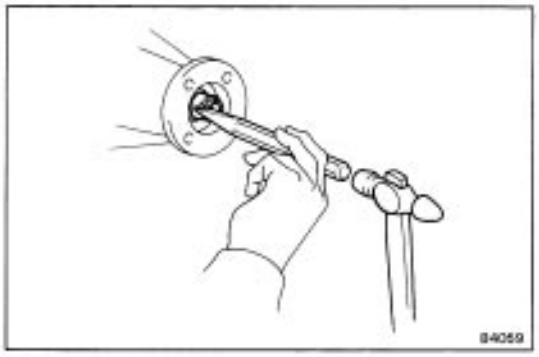

14. STAKE DRIVE PINION NUT

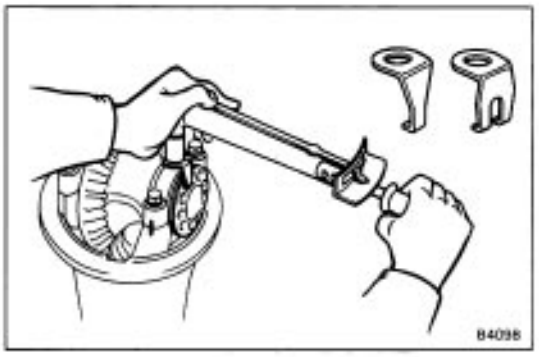

15. INSTALL ADJUSTING NUT LOCKS

(a) Select either a lock No.1 or No.2 which will fit the adjusting nuts.

(b) Install the lock on the bearing caps.

Torque: 130 kg–cm (9 ft–lb, 13 N–m)

INSTALLATION OF DIFFERENTIAL

(See page SA–41)

1. INSTALL A NEW GASKET

2. INSTALL DIFFERENTIAL CARRIER ASSEMBLY

Install differential carrier assembly in the axle and install the twelve nuts. Torque the nuts.

Torque: 315 kg–cm (23 ft–lb, 31 N–m)

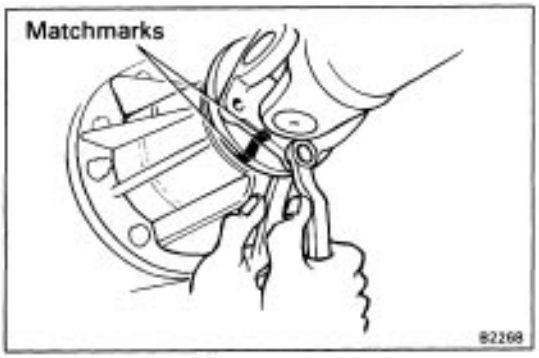

3. CONNECT PROPELLER SHAFT FLANGE TO COMPANION FLANGE

(a) Align the matchmarks on the flanges and connect the flanges with four bolts and nuts.

(b) Torque the bolts and nuts.

Torque: 380 kg–cm (27 ft–lb, 37 N–m)

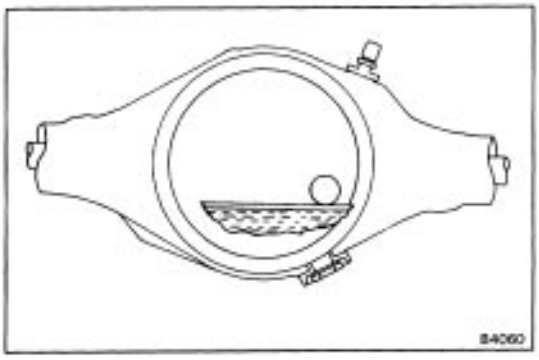

4. INSTALL DRAIN PLUG AND FILL DIFFERENTIAL WITH GEAR OIL

Oil grade: API GL–5 hypoid gear oil

Viscosity: Above –18˚C (0˚F) SAE 90

Below –18˚C (0˚F) SAE 80W–90 or 80W

Capacity: 1.1 liters (1.2 US qts, 1.0 Imp.qts)

Install a filler plug.

REAR AXLE HUB AND CARRIER (2WD)

COMPONENTS

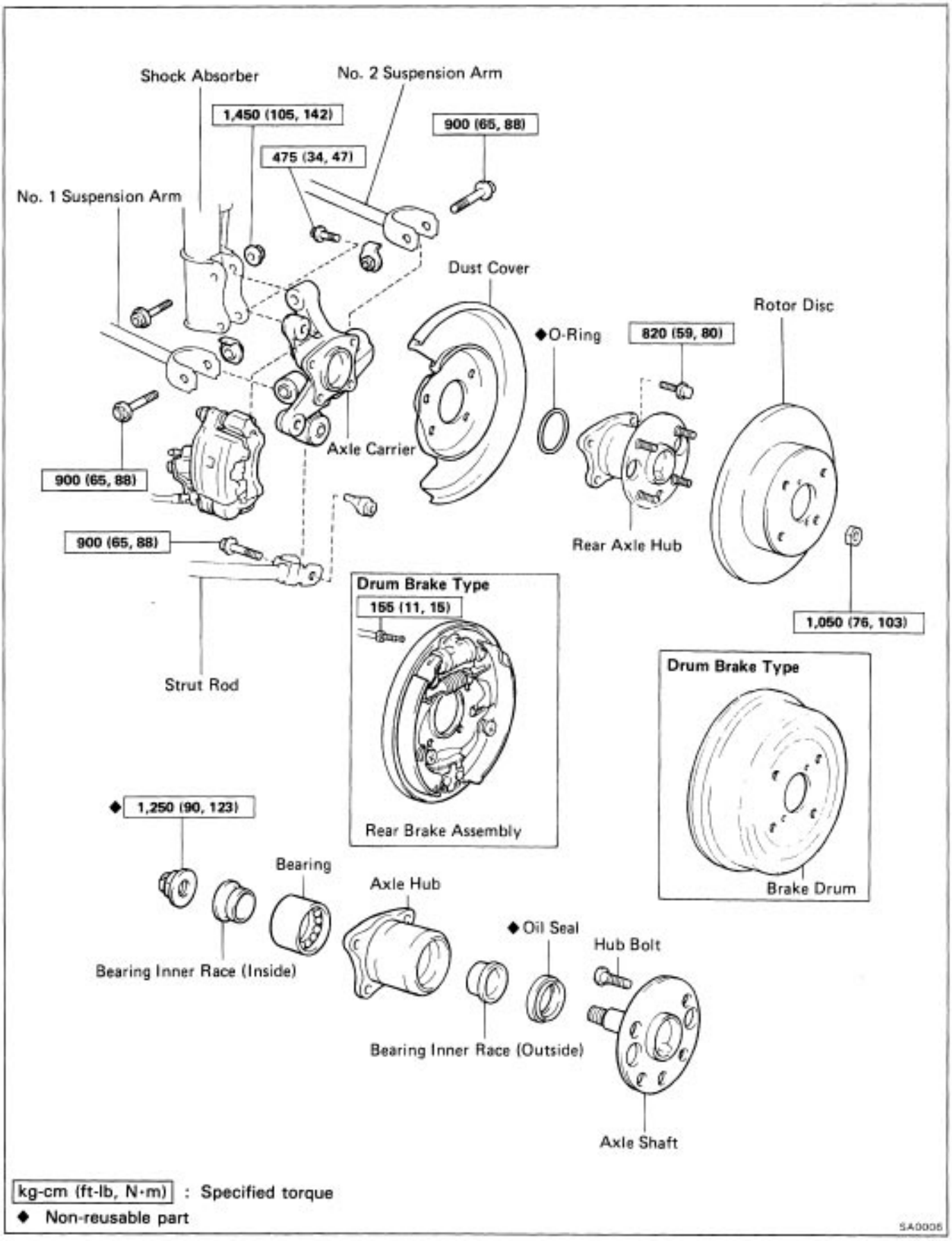

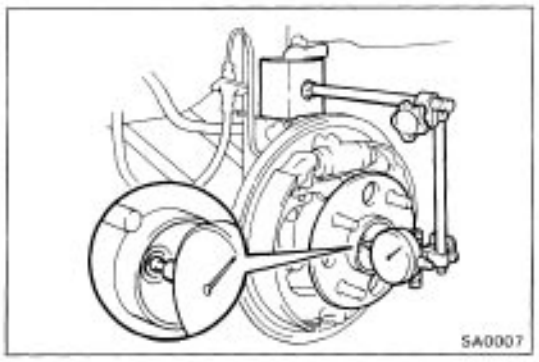

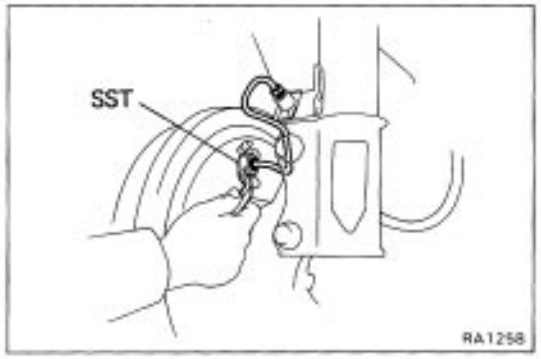

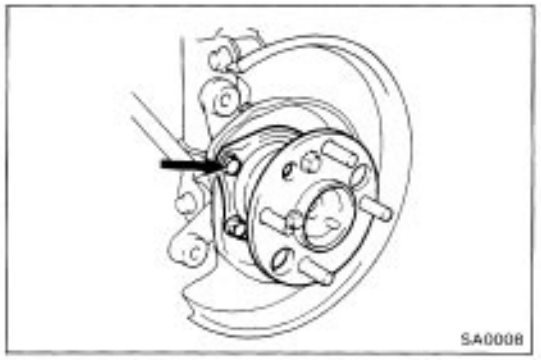

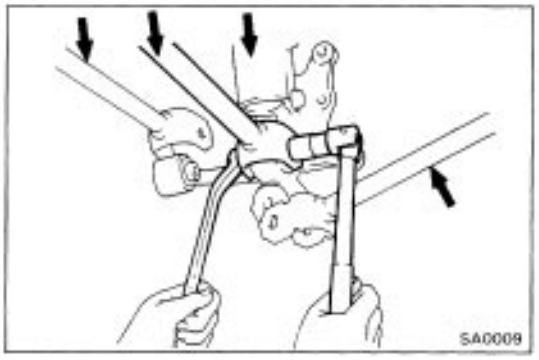

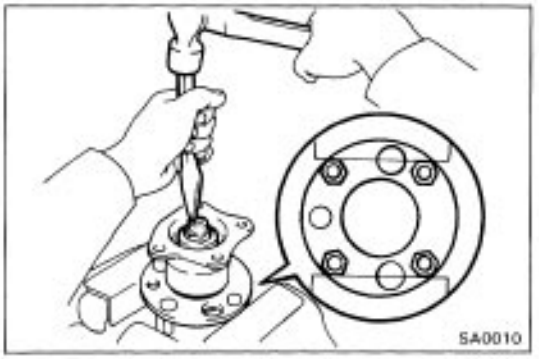

INSPECTION OF AXLE HUB BEARING

1. ROTATE BRAKE DRUM OR ROTOR DISC

Rotate the drum or the rotor disc by hand, if the movement is not smooth and free, replace the axle hub bearing.

2. REMOVE FOLLOWING PARTS:

(Drum brake type)

- Brake drum
  (Disc brake type)
- Brake caliper
- Rotor disc

3. CHECK BEARING PLAY AXIAL DIRECTION

Limit: 0.05 mm (0.0020 in.)

If not within specification, disassemble and inspect the axle hub assembly.

REMOVAL OF REAR AXLE HUB AND CARRIER

(See page SA–34)

1. REMOVE FOLLOWING PARTS:

(Drum brake type)

- Brake drum
  (Disc brake type)
- Brake caliper
- Disc rotor

2. (DRUM BRAKE TYPE)

DISCONNECT BRAKE TUBE FROM BACKING PLATE

Using SST, disconnect the brake tube from the backing plate.

SST 09751–36011

3. REMOVE REAR AXLE HUB

(a) Remove the four axle hub mounting bolts.
(b) Remove the axle hub and brake assembly.
(c) Remove the 0–ring from the backing plate.

4. REMOVE REAR AXLE CARRIER

(a) Disconnect the strut rod from the axle carrier.
(b) Disconnect the No. 1 and No. 2 suspension arm from the axle carrier.
(c) Remove the axle carrier from the rear shock absorber.

DISASSEMBLY OF REAR AXLE HUB

1. REMOVE LOCK NUT

(a) Using a hammer and chisel, unstake the nut.
(b) Remove the lock nut.

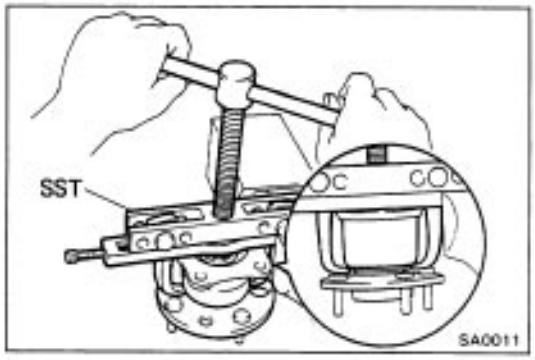

2. REMOVE AXLE SHAFT FROM AXLE HUB

Using SST, push the rear axle shaft off the rear axle hub.
SST 09950–20017

3. REMOVE BEARING INNER RACE (INSIDE)

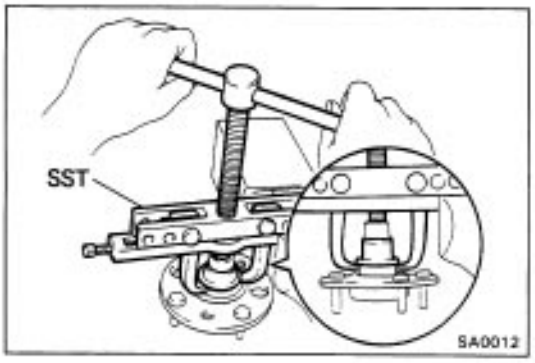

4. REMOVE BEARING INNER RACE (OUTSIDE)

Using SST, pull off the bearing inner race (outside) from the axle shaft.
SST 09950–20017

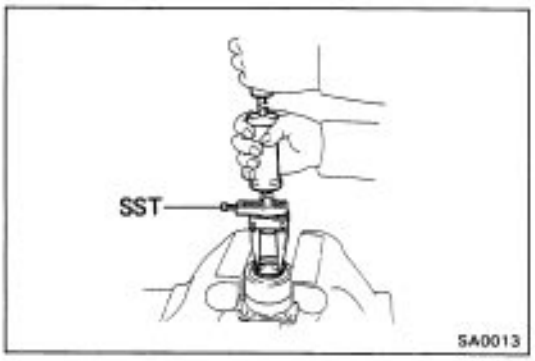

5. REMOVE OIL SEAL

Using SST, remove the oil seal from the axle hub.
SST 09308–00010

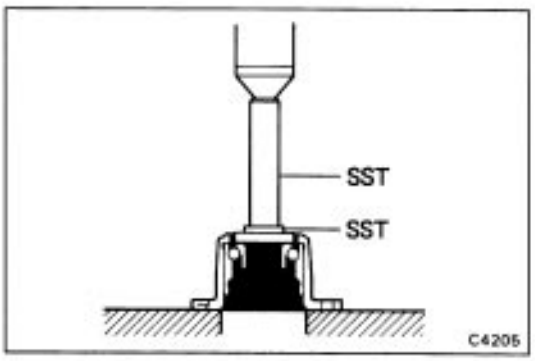

6. REMOVE BEARING

(a) First, install the inner race (outside) of the bearing to be removed.

(b) Using SST, press out the bearing.
SST 09550–10012 (09552–10010, 09558–10010)

NOTICE: Always replace the bearing as an assembly.

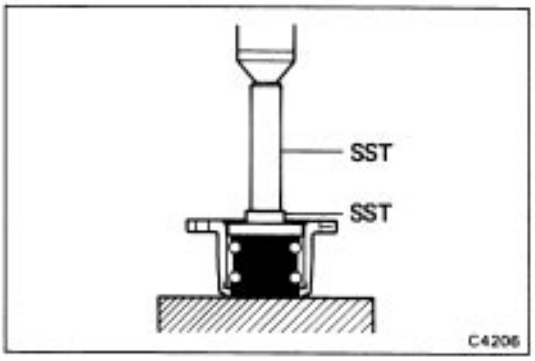

ASSEMBLY OF REAR AXLE HUB

1. INSTALL BEARING

(a) Apply MP grease around the outer race of a new bearing.

(b) Using SST, press the bearing into the axle hub.
SST 09550–10012 (09552–10010, 09555–10010)

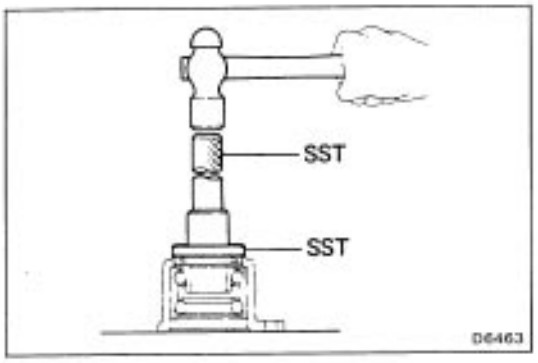

2. INSTALL NEW OIL SEAL

(a) Install a new bearing inner race (outside).

(b) Using SST, drive a new oil seal into the axle hub.
SST 09550–10012 (09552–10010, 09554–10010)

(c) Coat the oil seal lip with MP grease.

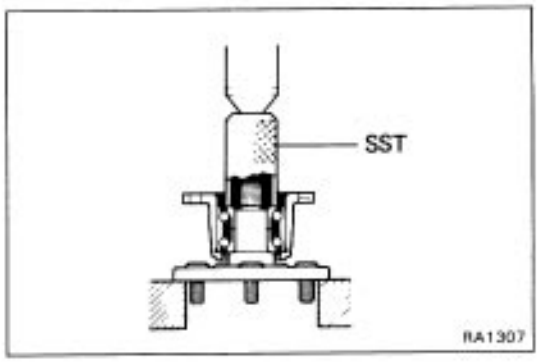

3. INSTALL AXLE SHAFT

(a) Install a new bearing inner race (inside).

(b) Using SST, press the inner races onto the axle shaft.
SST 09608–30012 (09608–04030)

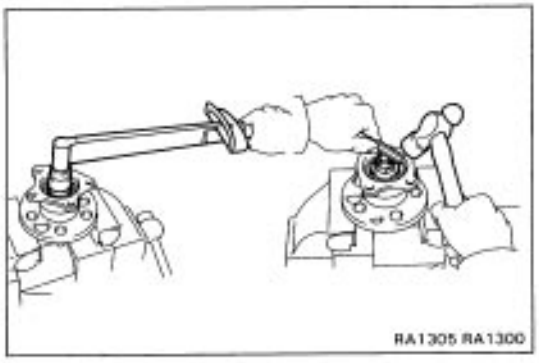

(c) Install and torque a new lock nut.
Torque: 1,250 kg–cm (90 ft–lb, 123 N–M)

(d) Using a hammer and a chisel, stake the nut.

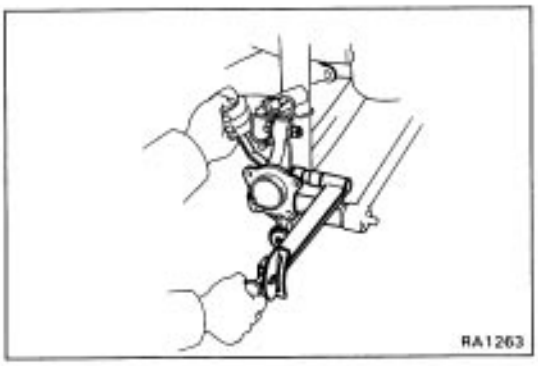

INSTALLATION OF REAR AXLE HUB AND CARRIER

(See page SA–56)

1. INSTALL REAR AXLE CARRIER

(a) Place the axle carrier position.

(b) Install and torque the axle carrier mounting bolts and nuts to the shock absorber.
Torque: 1,450 kg–cm (105 ft–lb, 142 N–m)

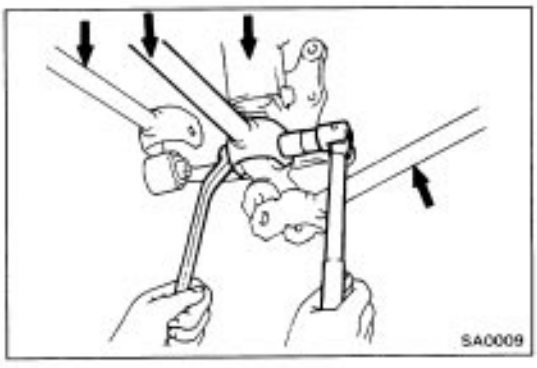

(c) Connect the No. 1 and No. 2 suspension arm to the axle carrier with the bolt, and temporarily install the retainer and nut.

(d) Temporarily connect the strut rod to the axle carrier with the bolt and the nut as shown in the figure.

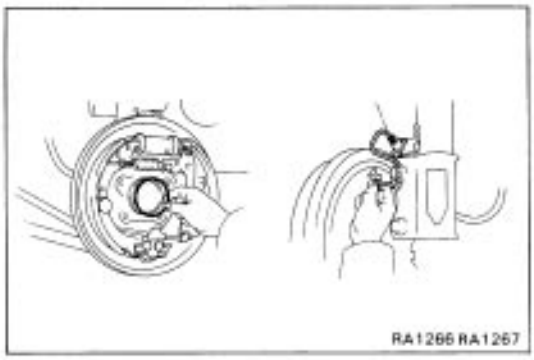

2. INSTALL REAR AXLE HUB

(a) Install the brake assembly or dust cover and a new oil seal to the axle carrier.

(b) (Drum brake type)
Temporarily connect the brake tube to the backing plate.

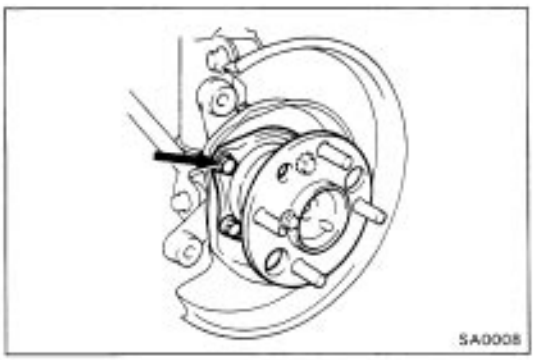

(c) Install the axle hub and torque the four bolts.
Torque: 820 kg–cm (59 ft–lb, 80 N–m)

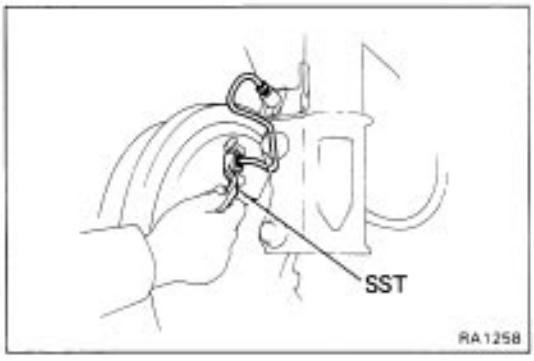

3. (DRUM BRAKE TYPE)
TORQUE BRAKE TUBE
Using SST, torque the brake tube union.
SST 09751–36011
Torque: 155 kg–cm (11 ft–lb, 15 N–m)

4. INSTALL BRAKE DRUM OR ROTOR DISC

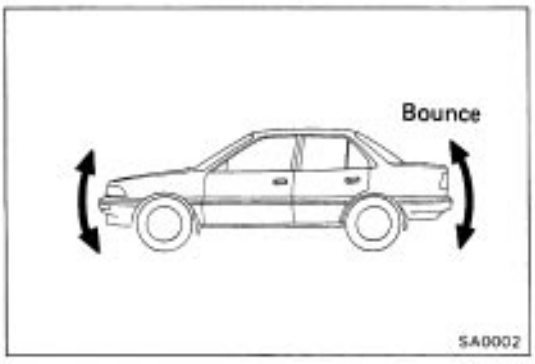

5. INSTALL WHEELS AND LOWER VEHICLE

(a) Install the wheels.

(b) Remove the stands and bounce the vehicle up and down to stabilize the suspension.

6. TORQUE AXLE CARRIER MOUNTING BOLTS
Torque the axle carrier mounting bolts with the vehicle weight on the suspension.
Torque:
Strut rod x Axle carrier
900 kg–cm (65 ft–lb, 88 N–m)
No. 1 and No. 2 suspension arm x Axle carrier
900 kg–cm (65 ft–lb, 88 N – m)

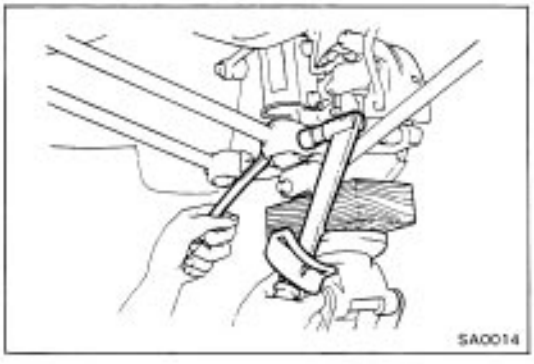

7. BLEED BRAKE SYSTEM
(See page BR–7)

8. CHECK REAR WHEEL ALIGNMENT
(See page SA–3)

REPLACEMENT OF REAR AXLE HUB BOLT
(See page SA–13)

REAR SUSPENSION (2WD)

COMPONENTS

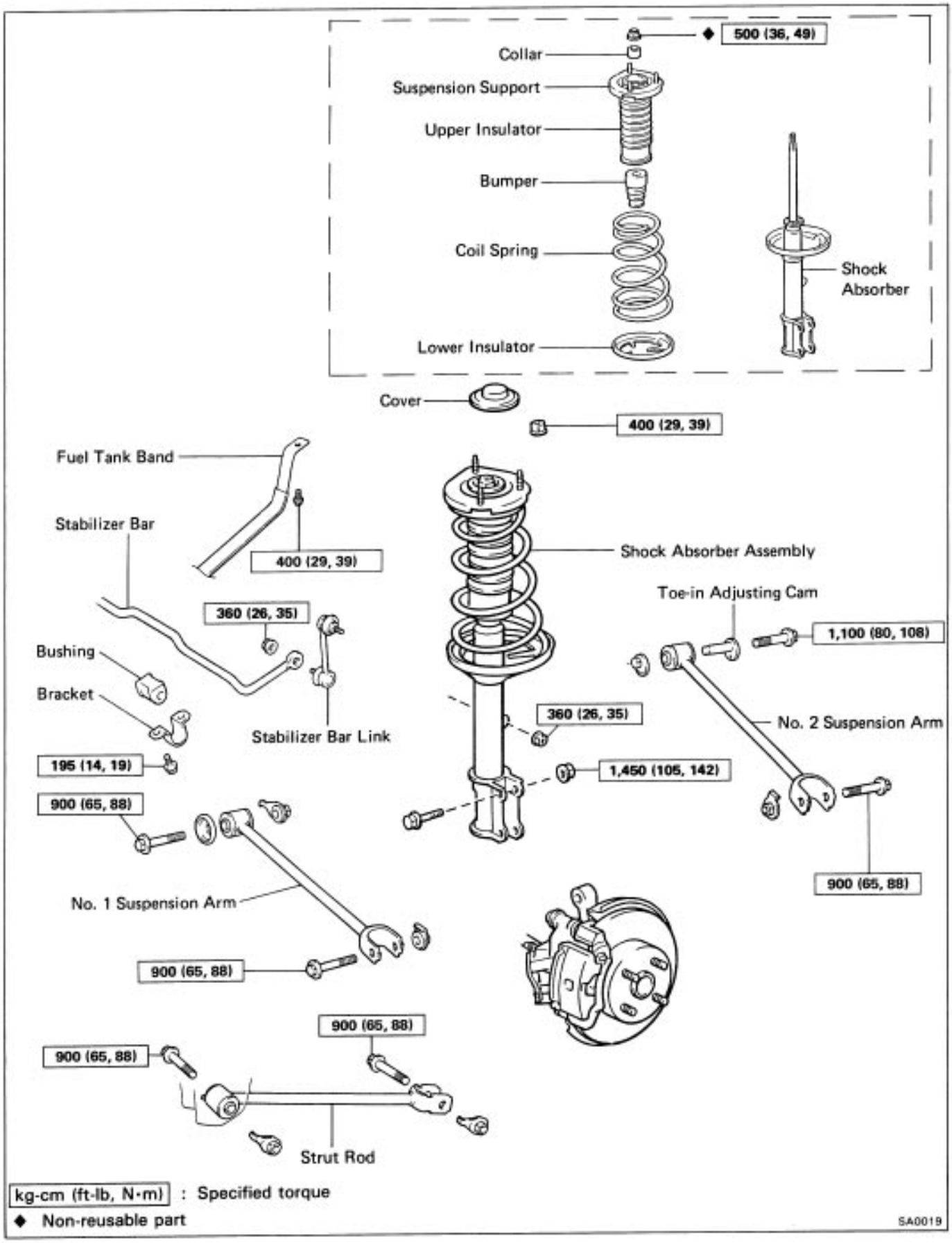

kg-cm (ft-lb, N·m) : Specified torque

◆ Non-reusable part

SA0019

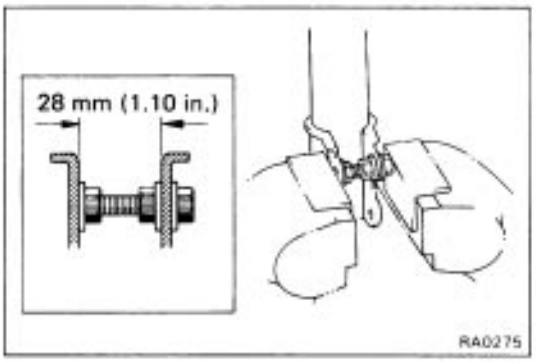

Rear Shock Absorber

REMOVAL AND INSTALLATION OF REAR SHOCK ABSORBER ASSEMBLY

Remove and install the parts as shown on page SA–61.

DISASSEMBLY OF REAR SHOCK ABSORBER ASSEMBLY

(See page SA–61)

REMOVE COIL SPRING

(a) Mount the shock absorber with a bolt and two nuts in a vise.

(b) Using SST, compress the coil spring.

SST 09727–30020

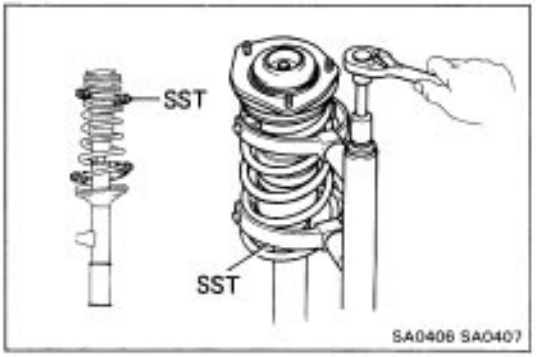

(c) Remove the cover from the suspension support.

(d) Using SST, hold the suspension support and remove the lock nut and collar.

SST 09729–22031

Remove the suspension support, coil spring, upper insulator, bumper and lower insulator.

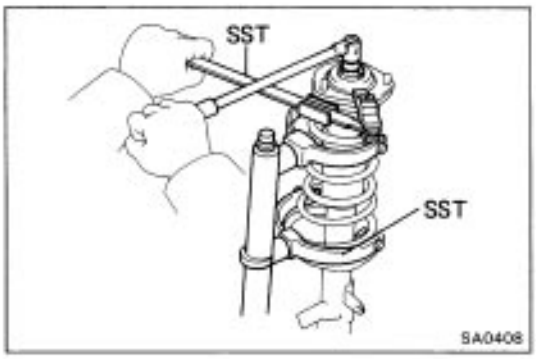

INSPECT OPERATION OF SHOCK ABSORBER

(a) While pushing the piston rod, check that the pull throughout the stroke is even, and there is no abnormal resistance or noise.

(b) Push the piston rod in fully and release it. Check that it returns at a constant speed throughout.

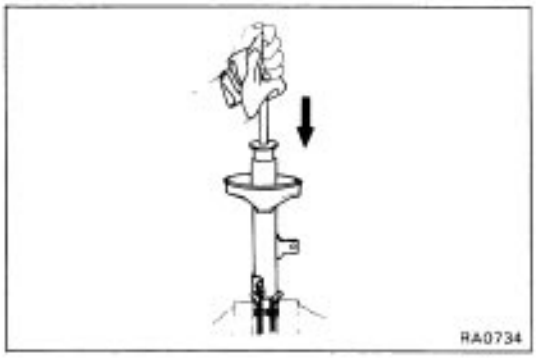

DISCARD SHOCK ABSORBER

Before discarding the absorber, drill a hole 2 – 3 mm (0.079 – 0.118 in.) in diameter at the location shown in the figure to release the gas inside.

NOTICE:

- **When drilling, chips may fly out, so work carefully.**
- **The gas is colorless, odorless, and non–poisonous.**

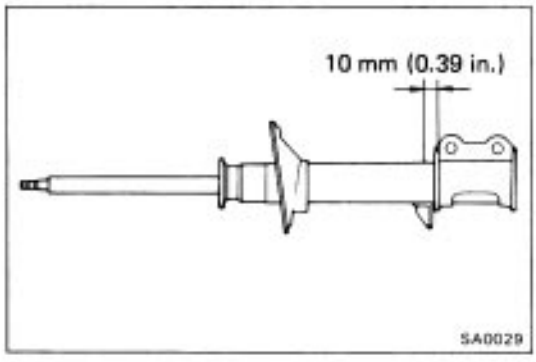

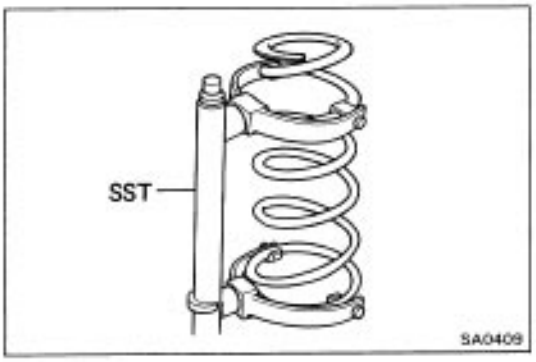

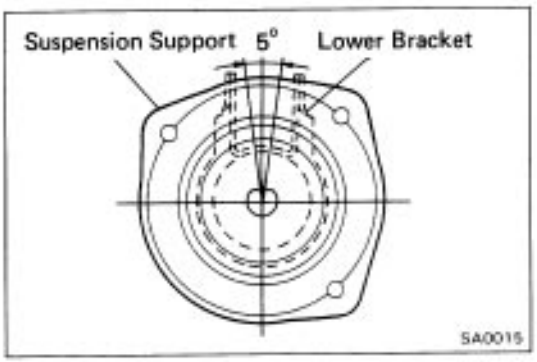

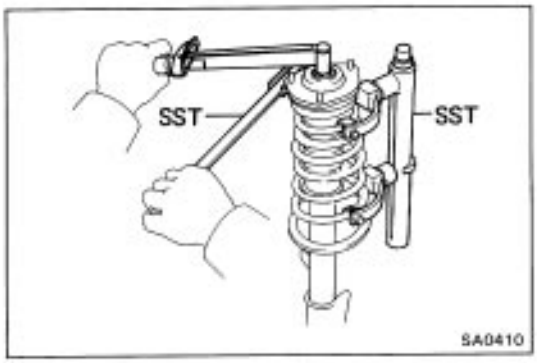

ASSEMBLY OF REAR SHOCK ABSORBER ASSEMBLY

(See page SA–61)

INSTALL SPRING BUMPER, INSULATOR, COIL SPRING AND SUSPENSION SUPPORT

(a) Mount the shock absorber in a vise.
(b) Using SST, compress the coil spring.
SST 09727–30020
(c) Install the lower insulator to the shock absorber.
(d) Align the coil spring end with the lower seat hollow and install the coil spring.
(e) Install the spring bumper to the shock absorber piston rod.
(f) Install the upper insulator.
(g) Align the suspension support with the piston rod and install it.
(h) Align the suspension support with the shock absorber lower bracket as shown.
(i) Install the collar to the piston rod.
Using SST, hold the suspension support and install and torque a new lock nut.

Torque: 500 kg–cm (36 ft–lb, 49 N– m)

SST 09729–22031

Suspension Arm

REMOVAL AND INSTALLATION OF SUSPENSION ARM

Remove and install the parts as shown components on page SA–61.

(MAIN POINT OF REMOVAL SUSPENSION ARM)

- Place matchmarks on the adjusting cam and body. (No. 2 suspension arm only)

(MAIN POINT OF INSTALLATION SUSPENSION ARM)

- Place the suspension arm in position.
- Temporarily install the bolt to the body and axle carrier.
- Bounce the vehicle up and down to stabilize the suspension.
- Align the matchmarks on the cam and body. (No. 2 suspension arm only)
- Torque the installation bolt with the vehicle weight on the suspension.
- Check rear wheel alignment. (See page SA–3)

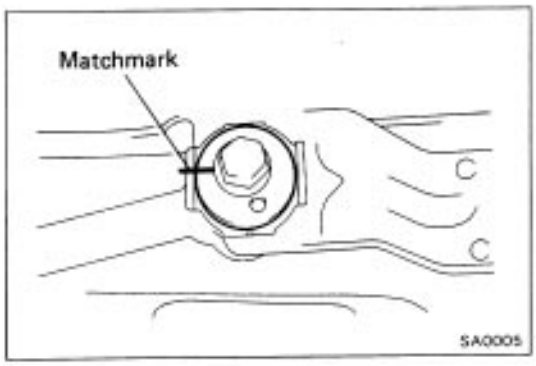

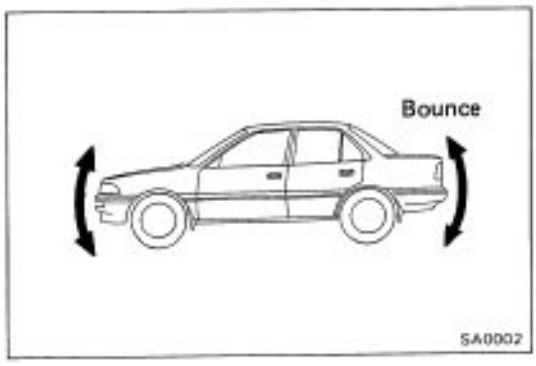

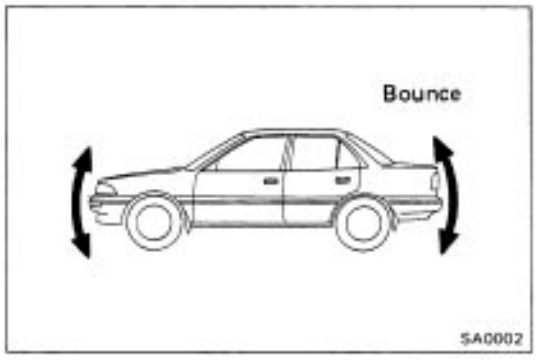

Strut Rod

REMOVAL AND INSTALLATION OF STRUT ROD

Remove and install the parts as shown on page SA–61.
(MAIN POINTS FOR INSTALLING STRUT ROD)

- Place the strut rod in position.
- Temporarily install the bolt to the body and axle carrier.
- Bounce the vehicle up and down to stabilize the suspension.
- Torque the installation bolt with the vehicle weight on the suspension.
- Check rear wheel alignment. (See page SA–3)

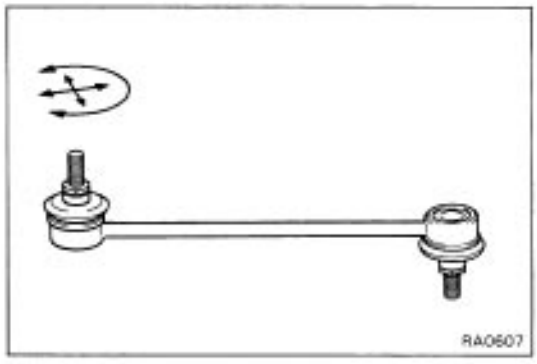

Stabilizer Bar

REMOVAL AND INSTALLATION OF STABILIZER BAR

Remove and install the stabilizer bar parts as shown on page SA–61.

INSPECT STABILIZER BAR LINK

Move the ball joint stud in all directions. If the movement is not smooth and free, replace the stabilizer link.

REAR SUSPENSION (4WD)

COMPONENTS

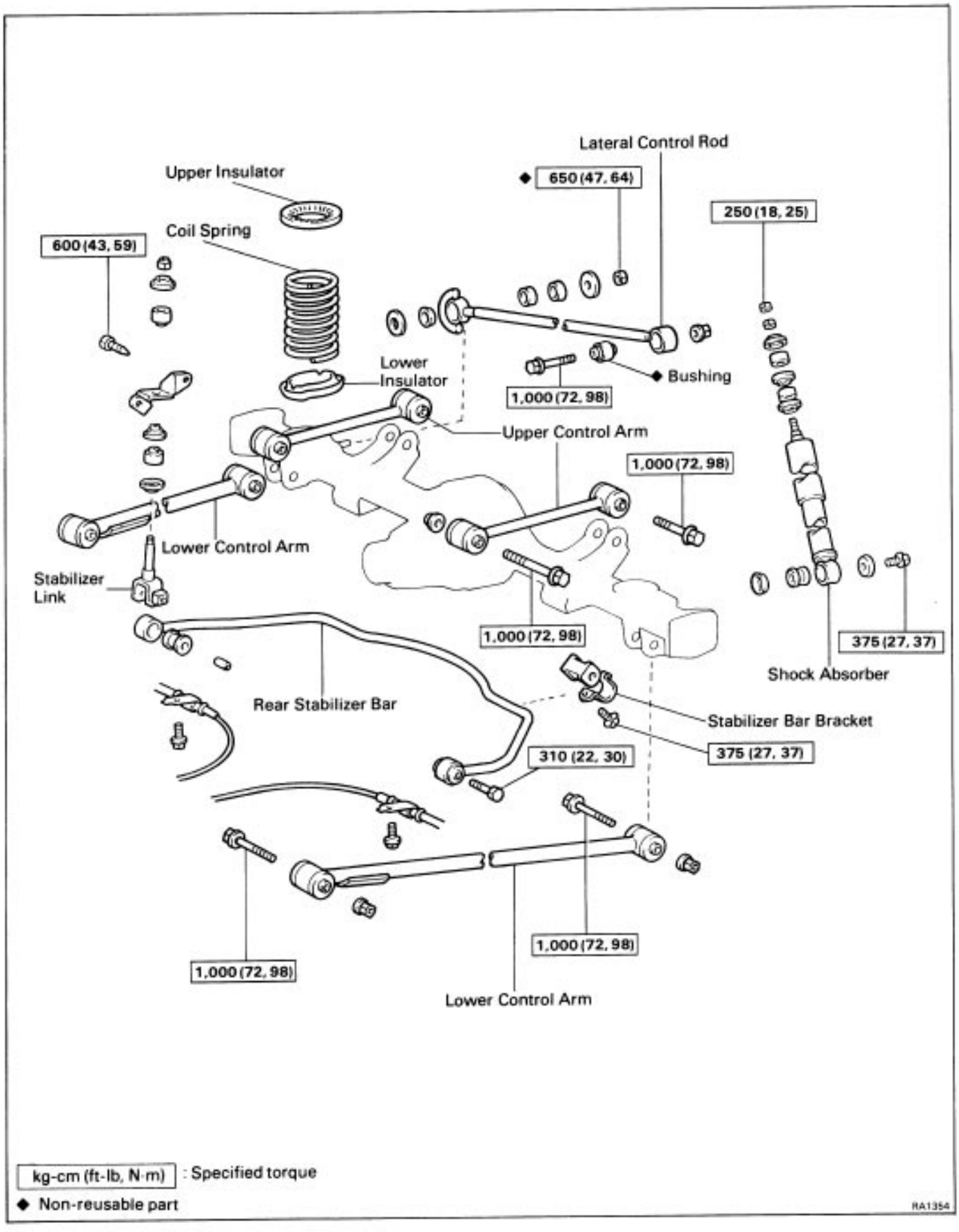

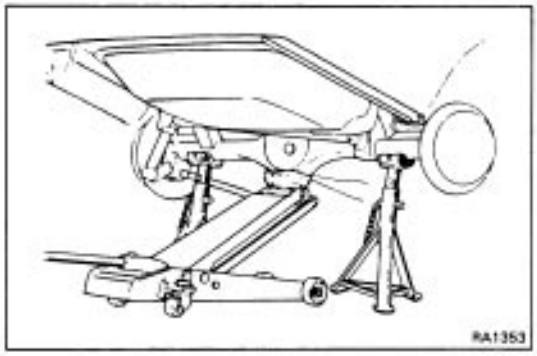

Coil Spring and Rear Shock Absorber

(See page SA–65**)**

REMOVAL OF COIL SPRING AND SHOCK ABSORBER

1. JACK UP VEHICLE

Jack up the rear axle housing and support the body with stands. Leave the jack under the rear axle.

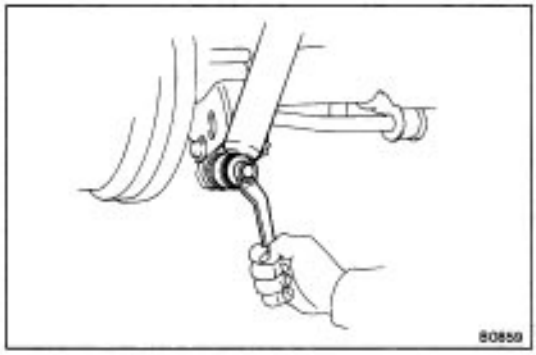

2. REMOVE REAR SHOCK ABSORBER

(a) Remove the bolt holding the shock absorber to the rear axle housing and disconnect the shock absorber.

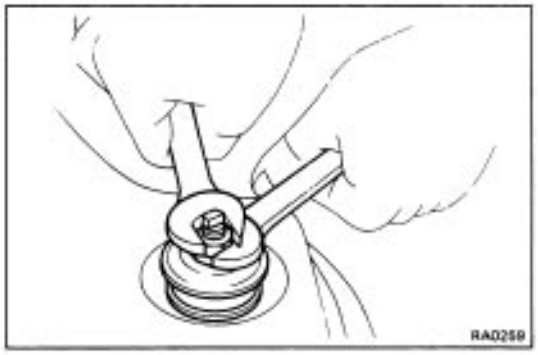

(b) If replacing the shock absorber, remove the shock absorber head cover and nut holding the shock absorber to the body, and remove the shock absorber.

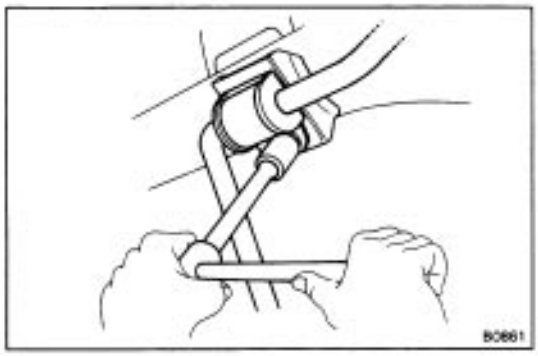

3. REMOVE STABILIZER BAR BRACKETS

Remove the bolts holding the stabilizer bar brackets to the rear axle housing.

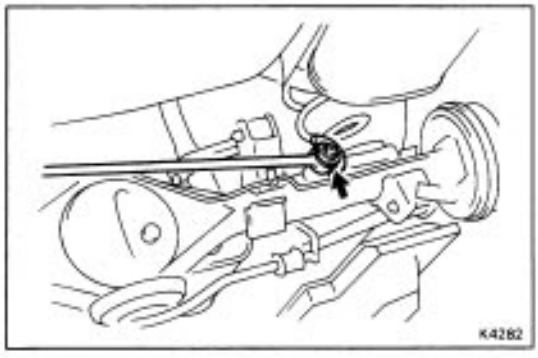

4. DISCONNECT LATERAL CONTROL ROD FROM REAR AXLE HOUSING

Remove the nut holding the lateral control rod to the rear axle housing and disconnect the lateral control rod.

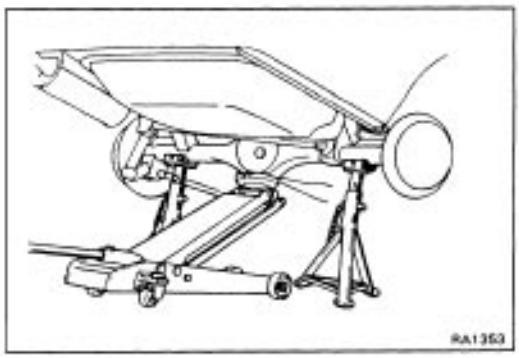

5. REMOVE COIL SPRING

(a) Begin lowering the rear axle housing.

HINT: Be careful not to pull the brake line and parking brake cable.

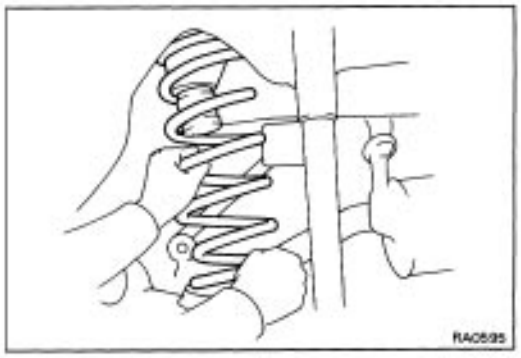

(b) While lowering the rear axle housing, remove the coil spring and upper and lower insulators.

INSTALLATION OF COIL SPRING AND SHOCK ABSORBER

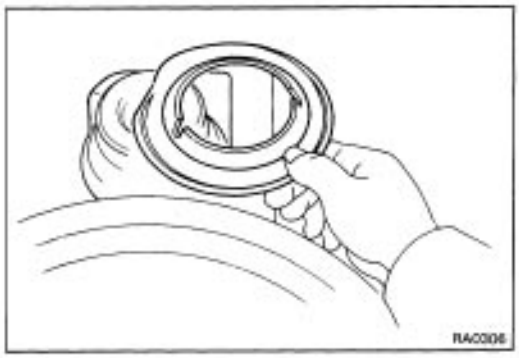

1. PLACE LOWER INSULATOR ON AXLE HOUSING



2. PLACE UPPER INSULATOR ON COIL SPRING

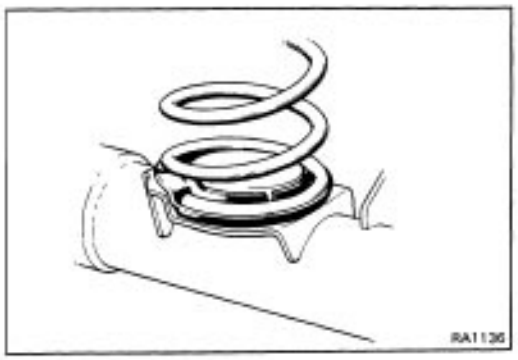

3. INSTALL COIL SPRING

4. CHECK POSITION OF LOWER INSULATOR

(a) Jack up the rear axle housing.

(b) Check that the lower insulator is installed correctly.

If the insulator– is not in correct position, reinstall the coil spring.

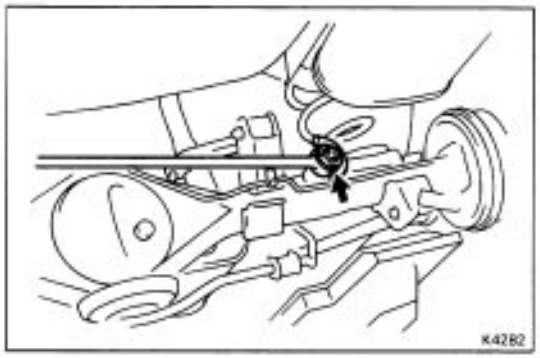

5. INSTALL LATERAL CONTROL ROD

In order, install the washer, bushing, spacer, lateral control rod, bushing, washer and nut onto the rear axle housing.

HINT: Do not tighten the nut yet.

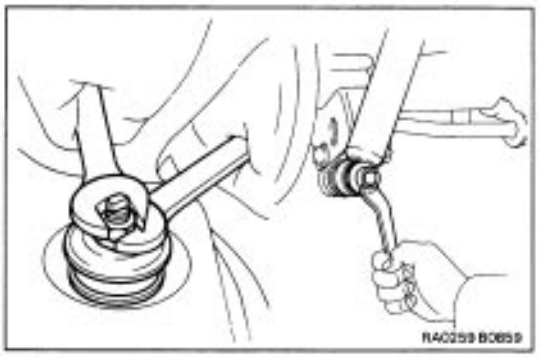

6. INSTALL SHOCK ABSORBER

(a) Connect the shock absorber to the body with the nut. Hold the shaft with an adjust wrench. Torque the lock nuts.

Torque: 250 kg–cm (18 ft–lb, 25 N–m)

(b) Connect the shock absorber to the rear axle housing with the bolt. Torque the bolt.

Torque: 375 kg–cm (27 ft–lb, 37 N–m)

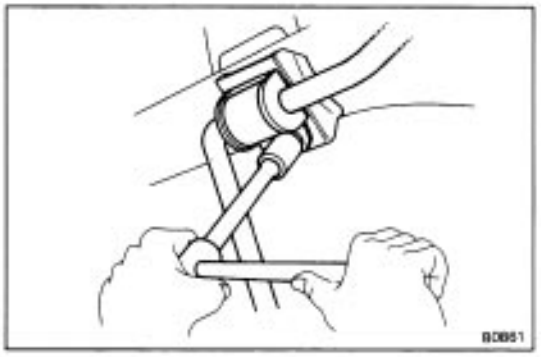

7. INSTALL STABILIZER BAR BRACKETS TO REAR AXLE HOUSING

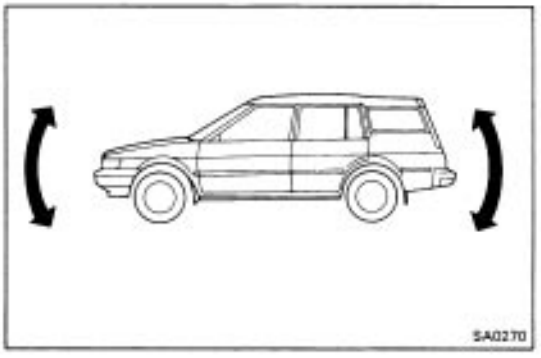

8. STABILIZE SUSPENSION

(a) Install the wheels.

(b) Remove the stands and bounce the vehicle up and down to stabilize the suspension.

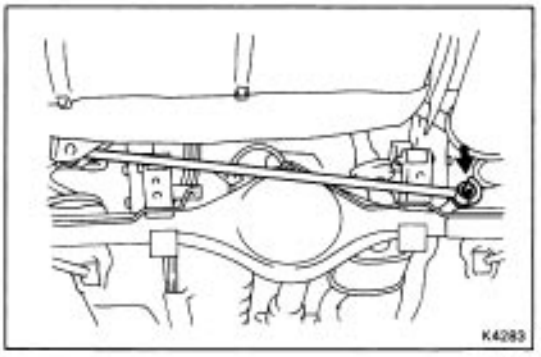

9. TIGHTEN LATERAL CONTROL ROD NUT

(a) Raise the axle housing until the body is free from the stands.

(b) Torque the lateral control rod nut.

Torque: 650 kg–cm (47 ft–lb, 64 N–m)

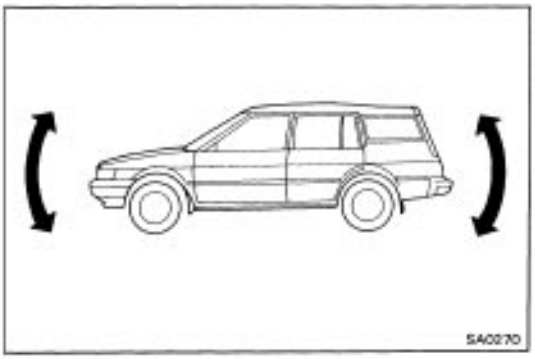

Lateral Control Rod Upper and Lower Control Arms

REMOVAL AND INSTALLATION OF LATERAL CONTROL ROD UPPER AND LOWER CONTROL ARMS

Remove and install the parts as shown on page SA–65.

(MAIN POINT OF INSTALLATION OF LATERAL CONTROL ROD, UPPER AND LOWER CONTROL ARMS)

- Place the suspension arm in position.
- Temporarily install the bolt to the body and axle housing.
- Bounce the vehicle up and down to stabilize the suspension.
- Torque the installation bolt with the vehicle weight on the suspension.

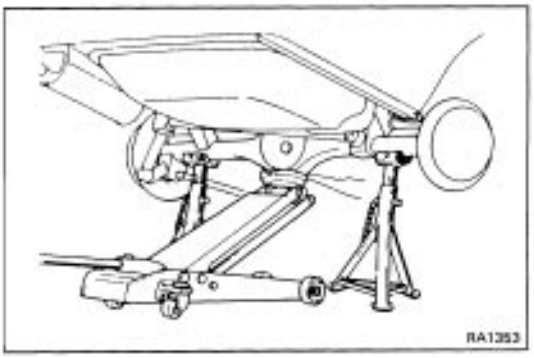

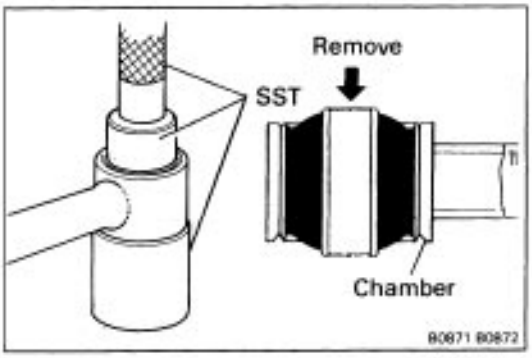

REPLACEMENT OF LATERAL CONTROL ROD BUSHING

1. REMOVE BUSHING

Using SST, press out the bushing from the lateral control rod.
SST 09710–14012
(09710–00030,09710–00040,09710–00050)
HINT: When inserting and removing the bushing, press or pull from the chamfered side as shown in the illustration.

2. INSTALL BUSHING

Using SST, press a new bushing into the lateral control rod.
SST 09710–14012
(09710–00030,09710–00040,09710–00050)
HINT: Do not use a lubricant when pressing in the bushing.

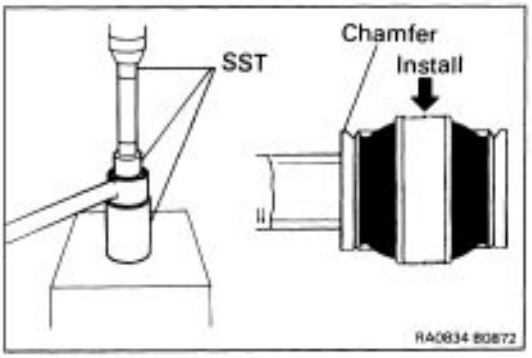

Stabilizer Bar

REMOVAL AND INSTALLATION OF STABILIZER BAR

Remove and install the stabilizer bar parts as shown on page SA–65.

STEERING

PRECAUTIONS

Care must be taken to replace parts properly because they may affect the performance of the steering system and result in a driving hazard.

TROUBLESHOOTING

Problem	Possible cause	Remedy	Page
Hard steering	Tires improperly inflated	Inflate tires to proper pressure	
	Insufficient lubricant	Lubricate suspension and steering linkage	
	Excessive caster	Check front wheel alignment	SA–4
	Steering system joints worn	Replace steering system joints	SR–17,18, 50,52
	Lower arm ball joints worn	Replace lower arm ball joints	SA–32
	Steering column binding	Inspect steering column	SR–3
	Steering gear out of adjustment or broken	Adjust or repair steering gear	SR–17,18, 50,52
	Power steering belt loose	Adjust belt	SR–33
	Fluid level in reservoir low	Check reservoir	SR–33
	Power steering unit faulty	Check power steering unit	SR–50,52
Poor return	Tires improperly inflated	Inflate tires to proper pressure	
	Insufficient lubricant	Lubricate suspension and steering linkage	
	Wheel alignment incorrect	Check front wheel alignment	SA–4
	Steering column binding	Inspect steering column	SR–3
	Steering gear out of adjustment or broken	Adjust or repair steering gear	SR–17,18, 50,52
Excessive play	Front wheel bearing worn	Replace front wheel bearing	SA–7
	Main shaft yoke or intermediate shaft yoke worn	Replace main shaft or intermediate shaft	
	Lower arm ball joints worn	Replace lower arm ball joints	SA–32
	Steering system joints worn	Replace steering system joints	SR–17,18, 50,52
	Steering gear out of adjustment or broken	Adjust or repair steering gear	SR–17,18, 50,52
Abnormal noise	Steering linkage loose	Tighten steering linkage	
	Steering system joints worn	Replace steering system joints	SR–17,18 50,52
	Steering gear out of adjustment or broken	Adjust or repair steering gear	SR–17,18, 50,52

ON–VEHICLE INSPECTION

CHECK THAT STEERING WHEEL FREEPLAY IS CORRECT

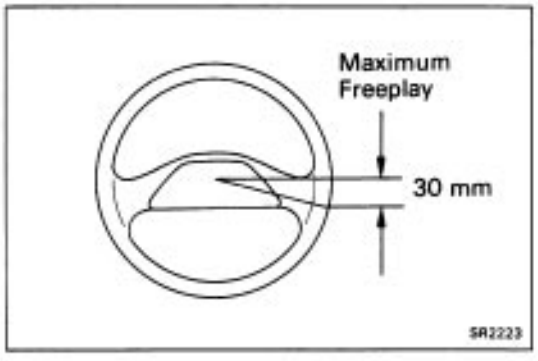

With the vehicle stopped and tires pointed straight ahead, rock the steering wheel gently back and forth with light finger pressure.

Freeplay should not exceed the maximum.

Maximum freeplay: 30 mm (1.18 in.)

If incorrect, repair.

STEERING COLUMN

REMOVAL AND INSTALLATION OF STEERING COLUMN

Remove and install the parts as shown.

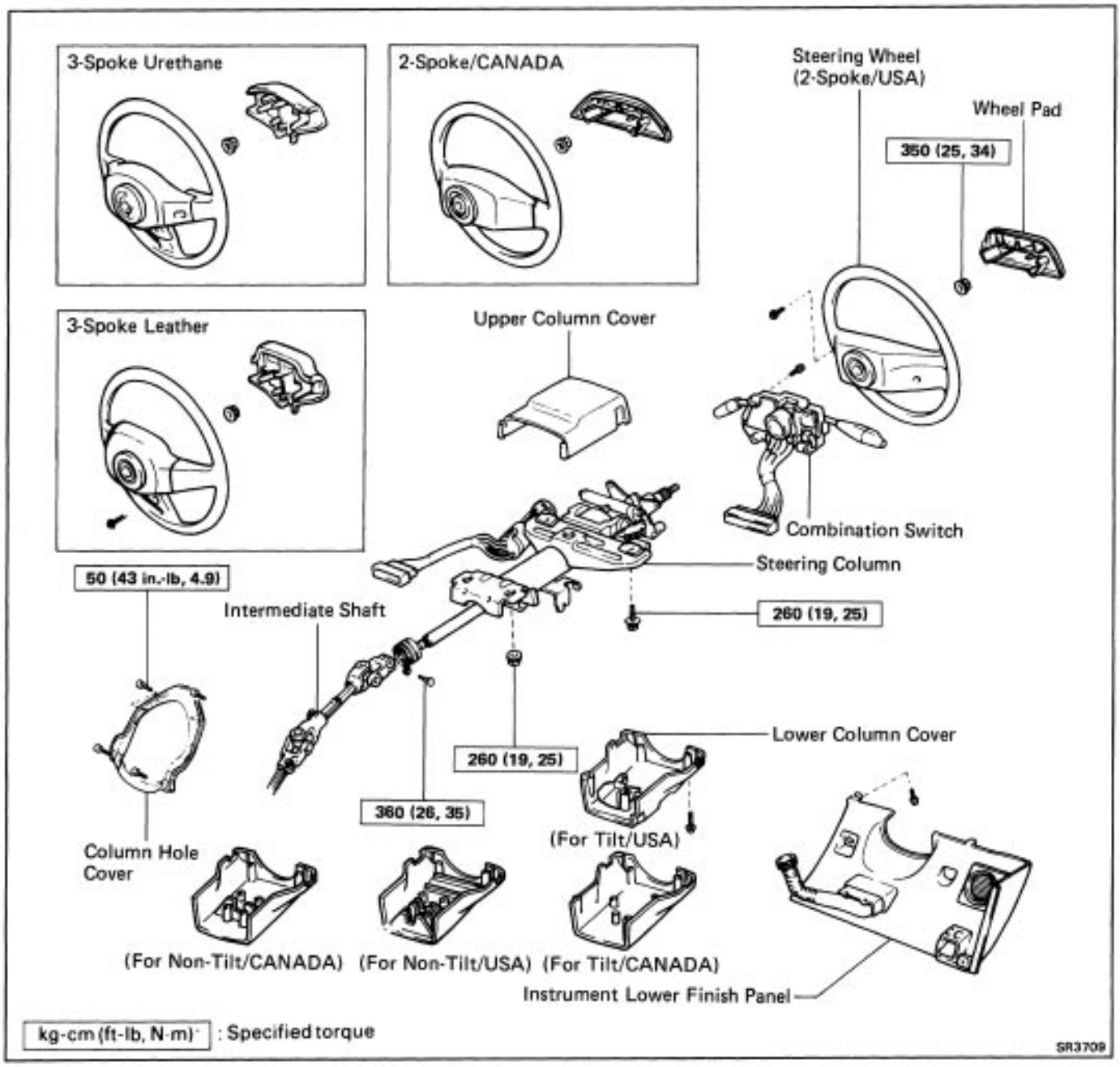

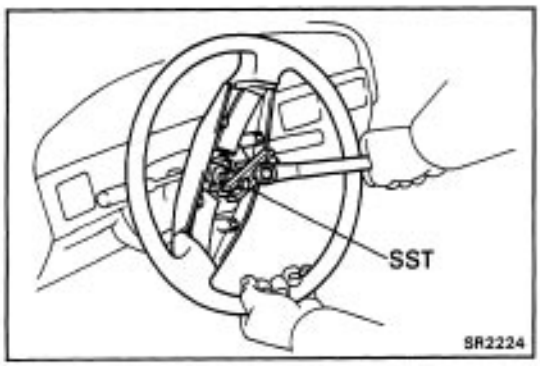

(MAIN POINTS OF REMOVAL AND INSTALLATION)

1. REMOVE STEERING WHEEL

Using SST, remove the steering wheel.

SST 09609–20011

2. CHECK STEERING WHEEL CENTER POINT AFTER INSTALLING STEERING COLUMN

Non–Tilt Steering Column

COMPONENTS

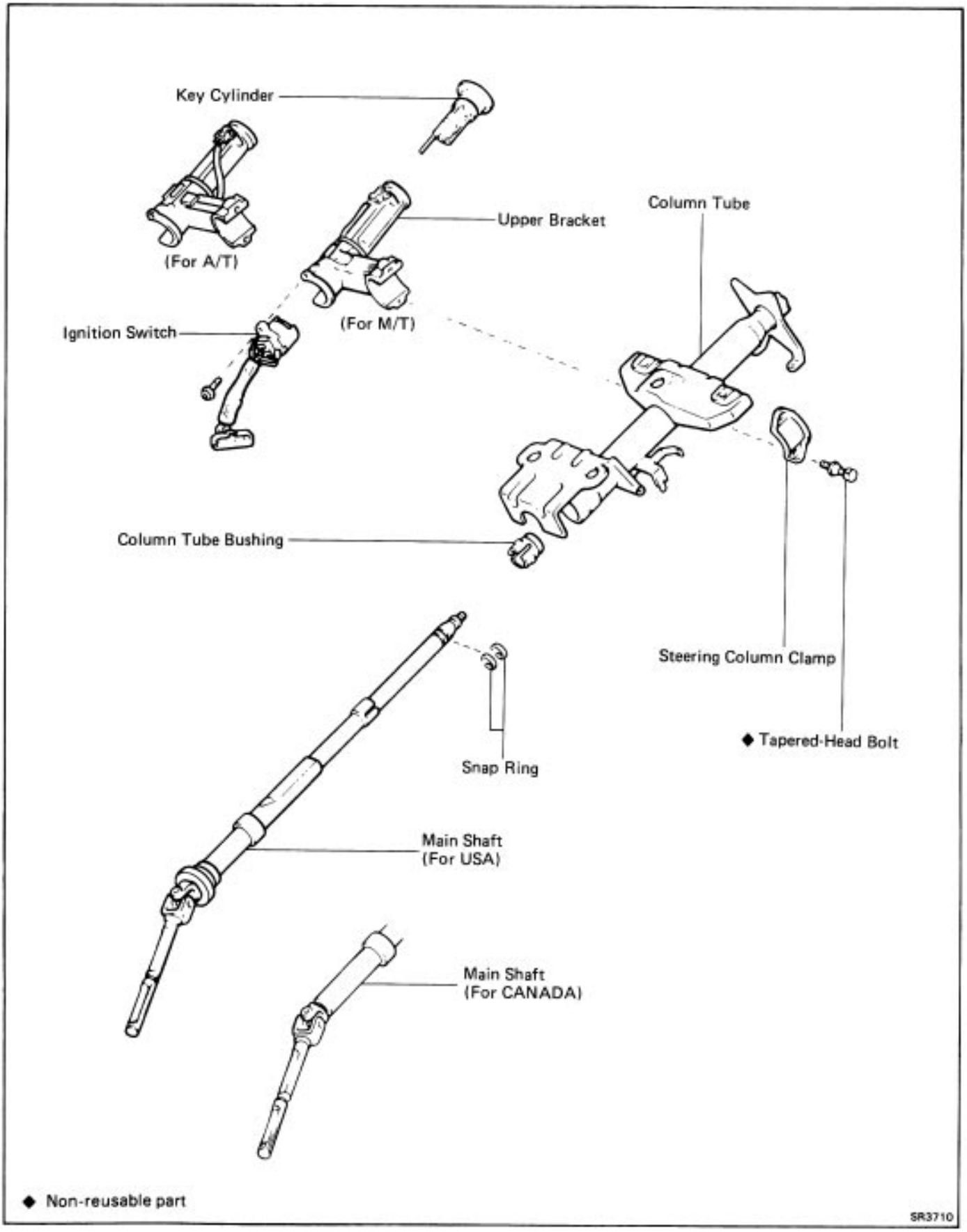

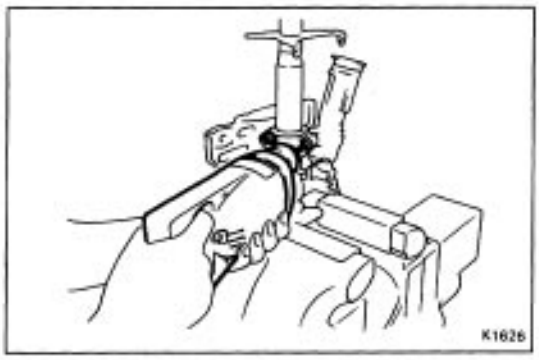

DISASSEMBLY OF STEERING COLUMN

1. REMOVE UPPER BRACKET

(a) Using a centering punch, mark the center of the tapered–head bolts.

(b) Using a 3–4 mm (0.12–0.16 in.) drill, drill into the tapered–head bolts.

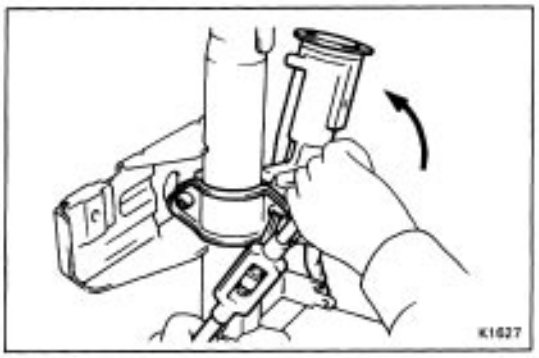

(c) Using a screw extractor, remove the tapered head bolts.

(d) Remove the two bolts, and separate the upper bracket and the column tube.

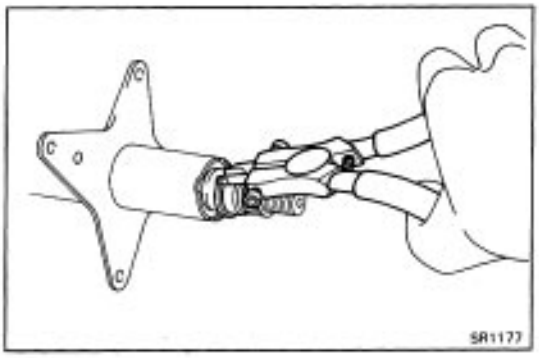

2. REMOVE MAIN SHAFT

(a) Using snap ring pliers, remove the upper snap ring.

(b) Remove the main shaft.

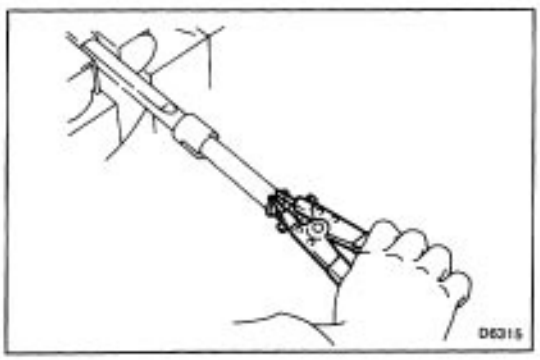

(c) Using snap ring pliers, remove the snap ring from the main shaft.

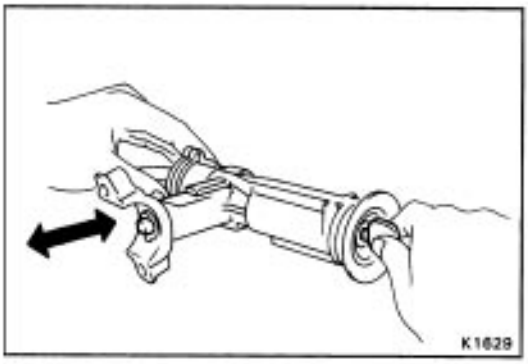

INSPECTION AND REPLACEMENT OF STEERING COLUMN

1. INSPECT UPPER BRACKET

Check that the steering lock mechanism operates properly.

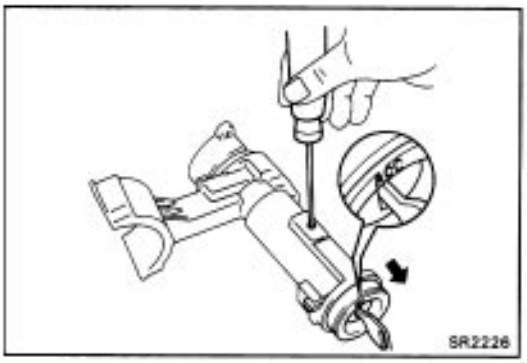

2. IF NECESSARY, REPLACE IGNITION KEY CYLINDER

(a) Place the ignition key at the ACC position.

(b) Push down the stop key with a thin rod, and pull out the key cylinder.

(c) Turn the ignition key plate to the ACC position, and install a new key cylinder into the upper bracket.

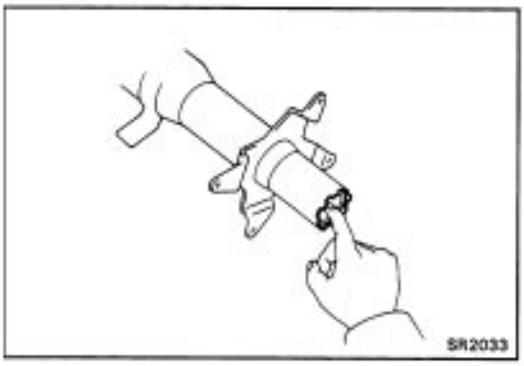

3. INSPECT UPPER BEARING

Check the upper bearing rotation condition and check for abnormal noise.

If the bearing is worn or damaged, replace the column tube assembly.

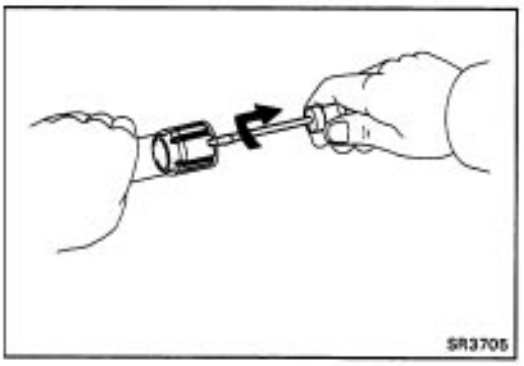

4. IF NECESSARY, REPLACE BUSHING

(a) Using a screwdriver, remove the bushing.

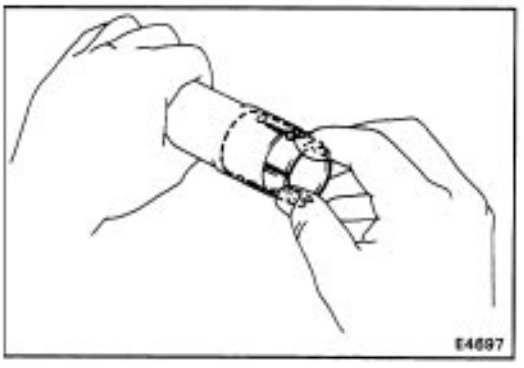

(b) Align the holes of the tube and the projections of new bushing, and insert the bushing to the column tube.

ASSEMBLY OF STEERING COLUMN

(See page SR–4)

1. INSTALL MAIN SHAFT TO COLUMN TUBE

(a) Using snap ring pliers, install the snap ring in the lower groove of the main shaft.

(b) Insert the main shaft in the column tube.

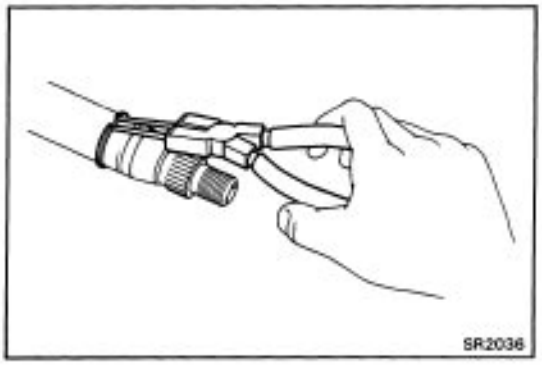

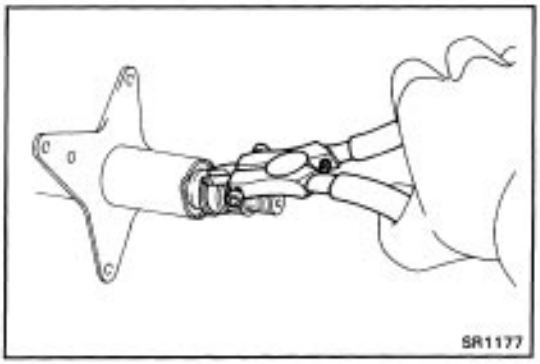

(c) Using snap ring pliers, install the upper snap ring.

2. INSTALL UPPER BRACKET TO COLUMN TUBE

(a) Install the upper bracket with two new tapered–head bolts.

(b) Tighten the tapered–head bolts until the bolt heads break off.

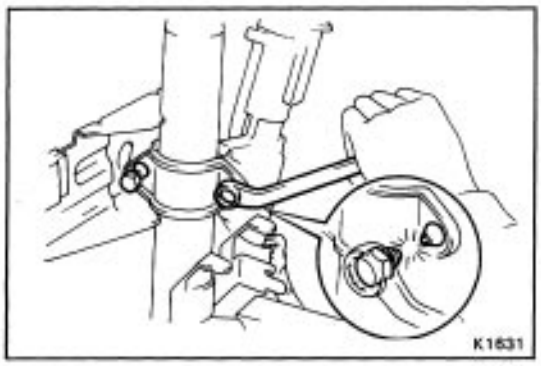

Tilt Steering Column

COMPONENTS

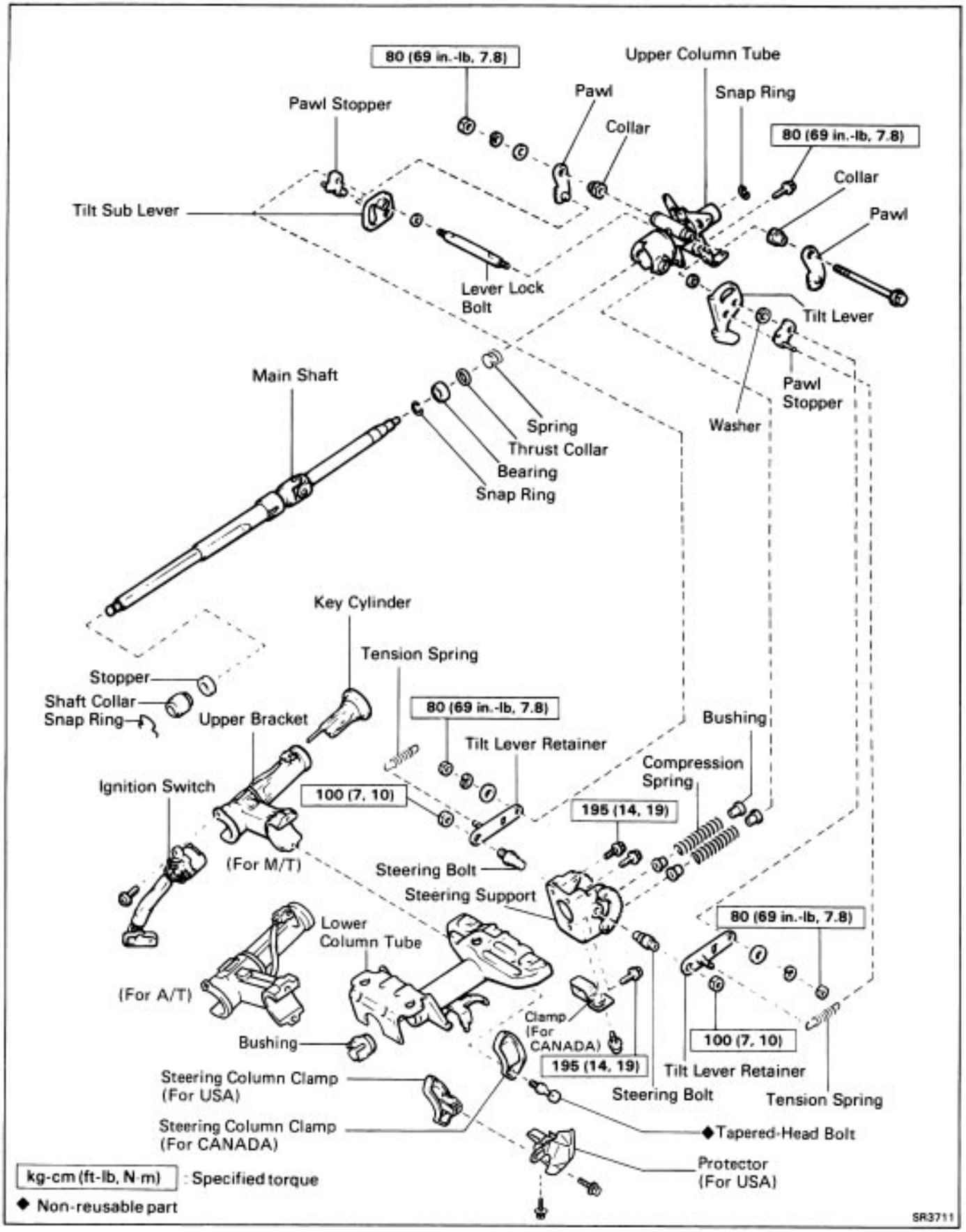

DISASSEMBLY OF STEERING COLUMN

(See page SR–8)

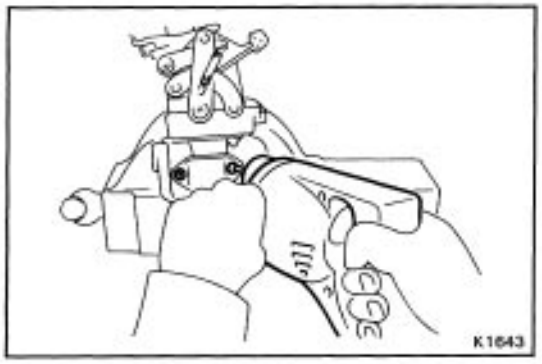

1. REMOVE UPPER BRACKET

(a) Using a centering punch, mark the center of the tapered–head bolts.

(b) Using a 3–4 mm (0.12–0.16 in.) drill, drill into the tapered–head bolts.

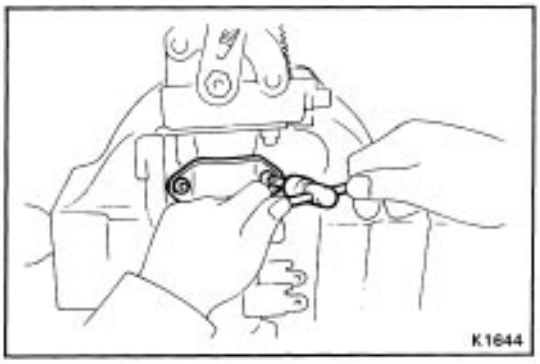

(c) Using a screw extractor, remove the tapered–head bolts.

(d) Remove the two bolts, and separate the upper bracket and the column tube.

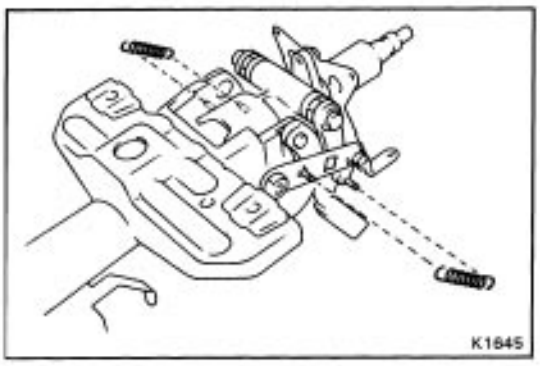

2. REMOVE TWO TENSION SPRINGS

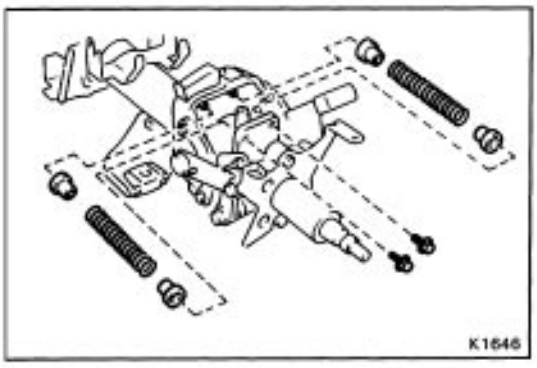

3. REMOVE TWO COMPRESSION SPRINGS

(a) Remove the two bolts with the two springs.

(b) Remove the bushings from the springs.

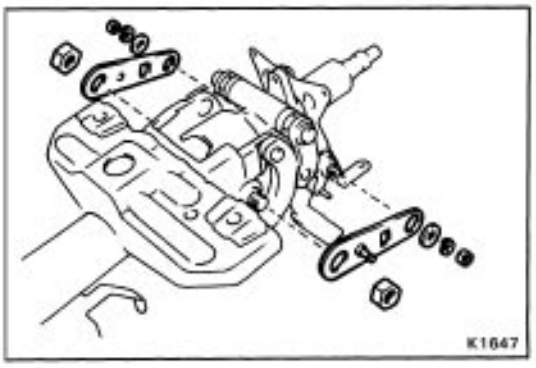

4. REMOVE TWO TILT LEVER RETAINERS

(a) Remove the nuts from the lock bolts.

(b) Remove the retainer with the two nuts.

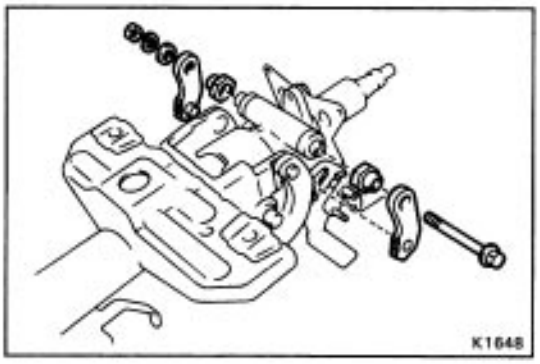

5. REMOVE TWO TILT PAWLS

(a) Remove the nut and bolt.
(b) Remove the two pawls with the collars.
(c) Remove the collar from the pawl.

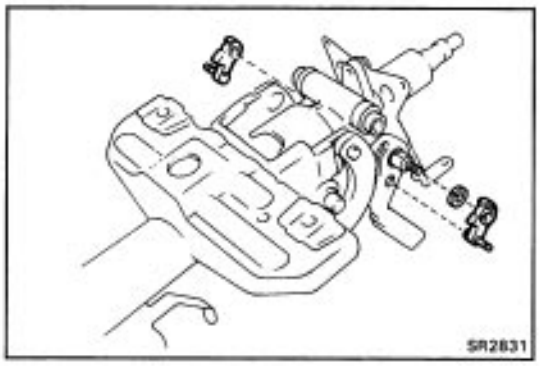

6. REMOVE TWO PAWL STOPPERS

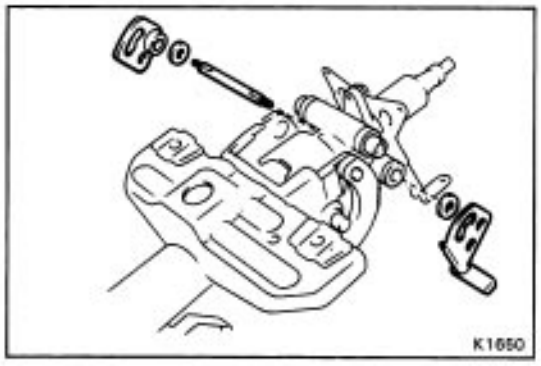

7. REMOVE TILT LEVER, TILT SUB LEVER AND LEVER LOCK BOLT

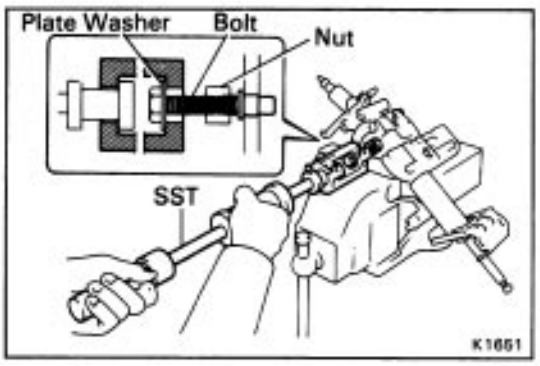

8. REMOVE UPPER COLUMN TUBE

(a) Set SST, the nut (10 mm nominal diameter, 1.25 mm pitch), plate washer (36 mm outer diameter) and bolt (10 mm nominal diameter, 1.25 mm pitch, 50 mm length) as shown. And then remove the two bolts.
SST 09910–00015 (09911–00011, 09912–00010)

(Reference)	Nut	90170–10004
	Plate washer	90201–10201
	Bolt	91111–51050

(b) Remove the upper column tube from the lower column tube.
(c) Remove the stopper.

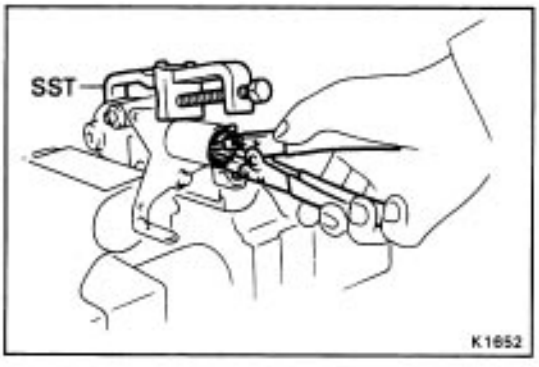

9. REMOVE MAIN SHAFT

(a) Using SST to compress the main shaft spring, remove the snap ring with snap ring pliers.
SST 09950–20017

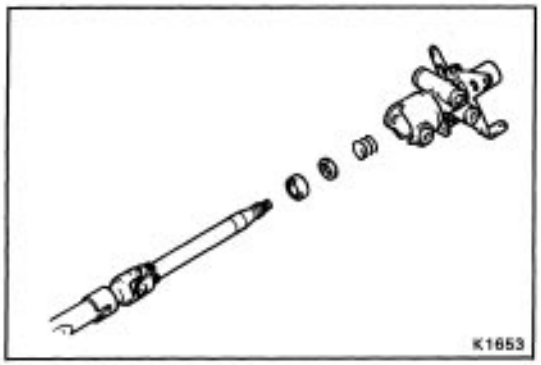

(b) Remove the main shaft from the column tube.
(c) Remove the spring, thrust collar and bearing.

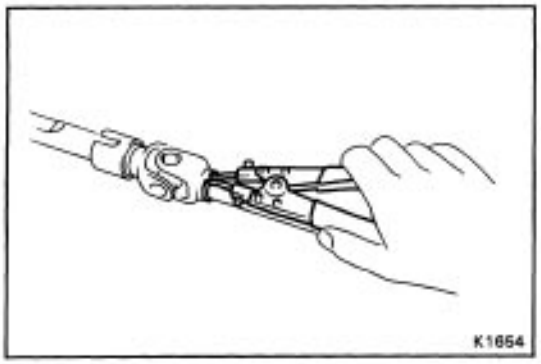

(d) Using snap ring pliers, remove the snap ring.

10. REMOVE WIRE HARNESS CLAMP

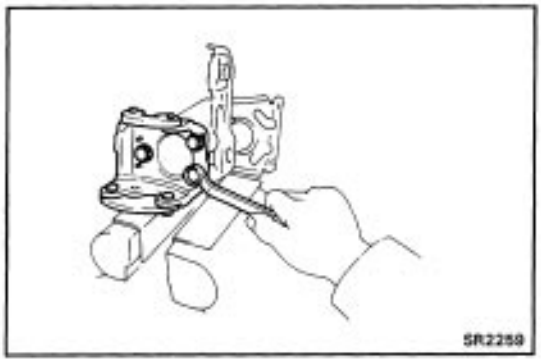

11. REMOVE STEERING SUPPORT

Remove the three bolts, and separate the steering support and the column tube.

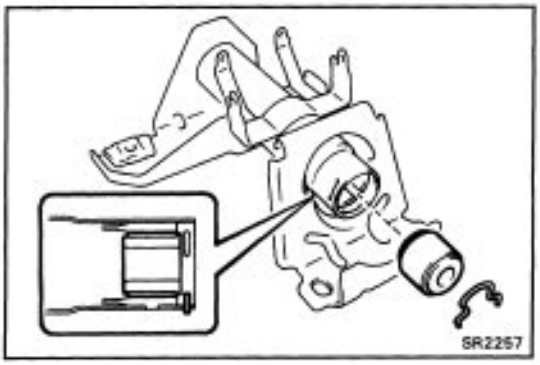

12. REMOVE MAIN SHAFT COLLAR

(a) Remove the snap ring from the lower column tube.
(b) Remove the main shaft collar.

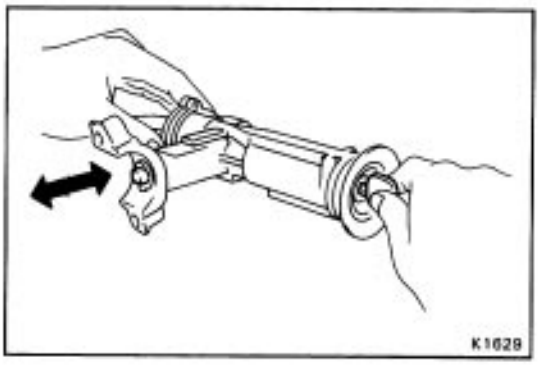

INSPECTION AND REPLACEMENT OF STEERING COLUMN

1. INSPECT KEY CYLINDER

Check that the steering lock mechanism operates properly.

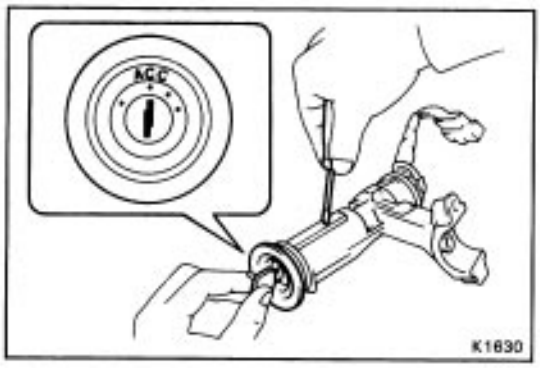

2. IF NECESSARY, REPLACE KEY CYLINDER

(a) Place the ignition key at the ACC position.
(b) Push down the stop key with a thin rod, and pull out the key cylinder.
(c) Make sure that the ignition key is at the ACC position.
(d) Install a new key cylinder.

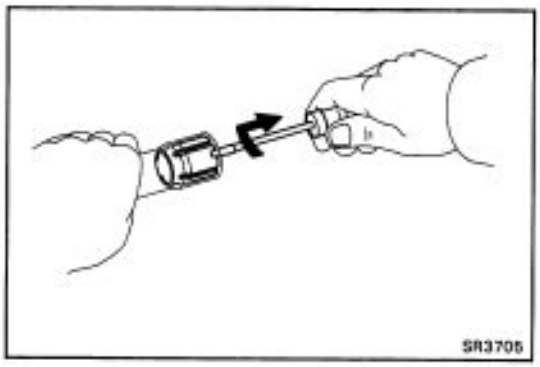

3. INSPECT MAIN SHAFT BUSHING

(a) Using a screwdriver, remove the bushing.
(b) Inspect the bushing.

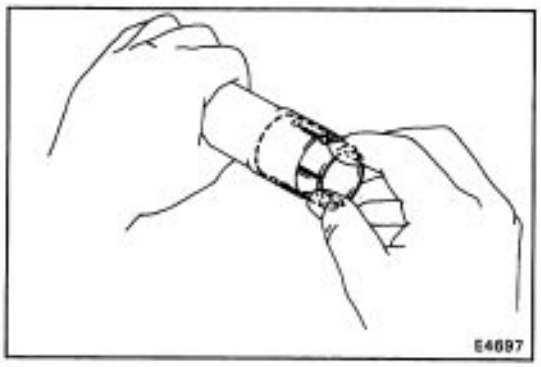

(c) Align the holes of the tube and the projections of new bushing, and insert the bushing in the column tube.

ASSEMBLY OF STEERING COLUMN

(See page SR–8)

1. COAT MOLYBDENUM DISULPHIDE LITHIUM BASE GREASE ON FOLLOWING PARTS:

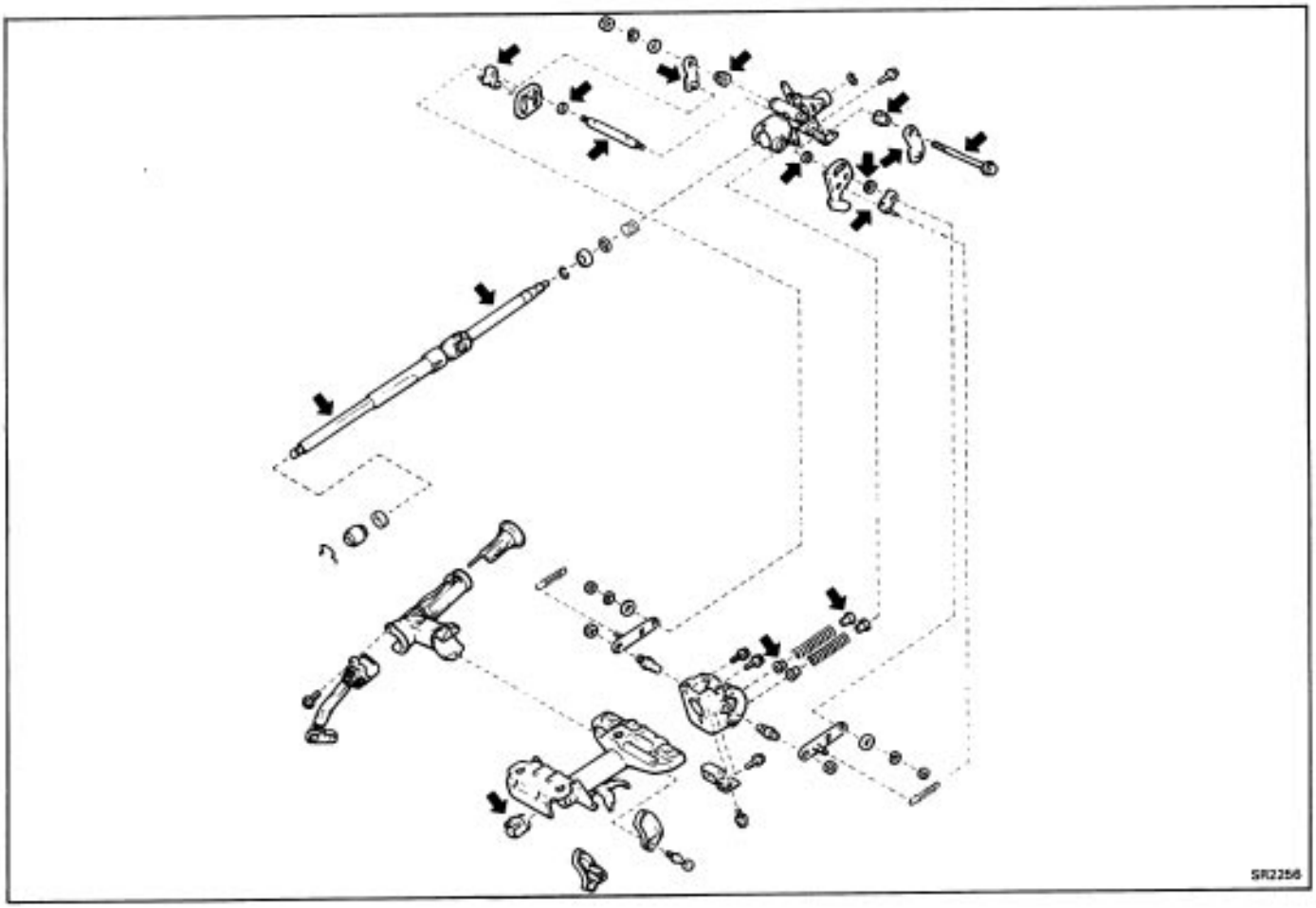

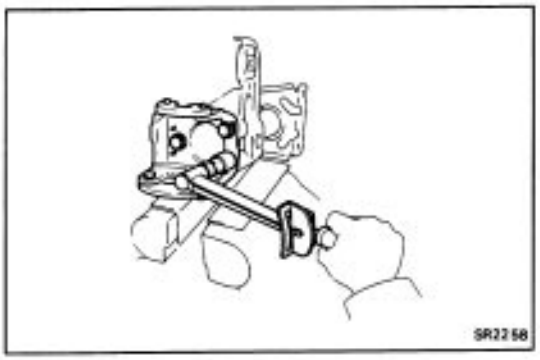

2. INSTALL STEERING SUPPORT

Install the support with the three bolts.

Torque: 195 kg–cm (14 ft–lb, 19 N–m)

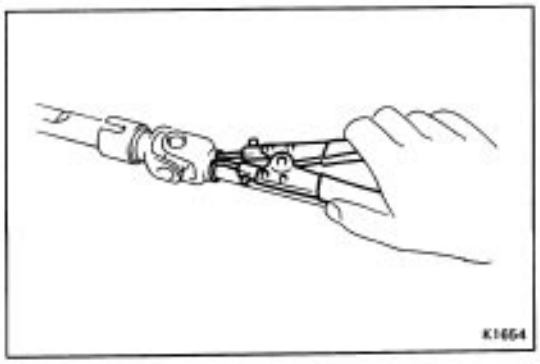

3. INSTALL MAIN SHAFT

(a) Using a snap ring pliers, install the snap ring.

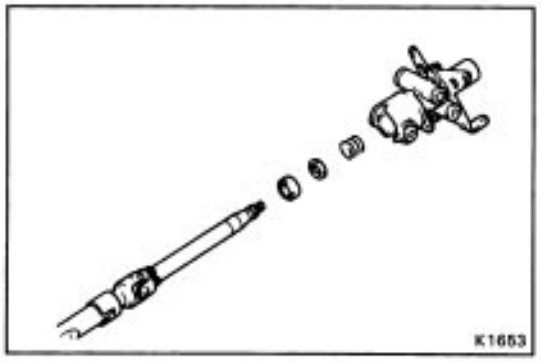

(b) Install the main shaft with the bearing, collar an spring.

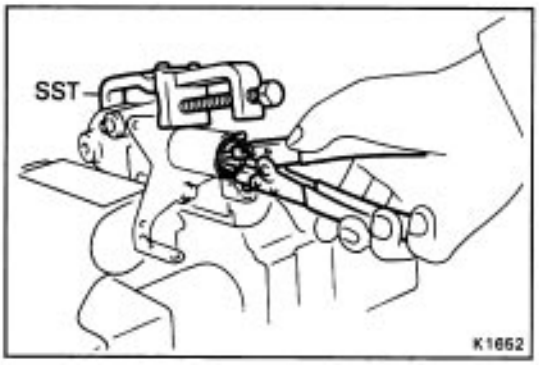

(c) Using SST to compress the main shaft spring, install the snap ring with snap ring pliers.
SST 09950–20017

4. INSTALL WIRE HARNESS CLAMP

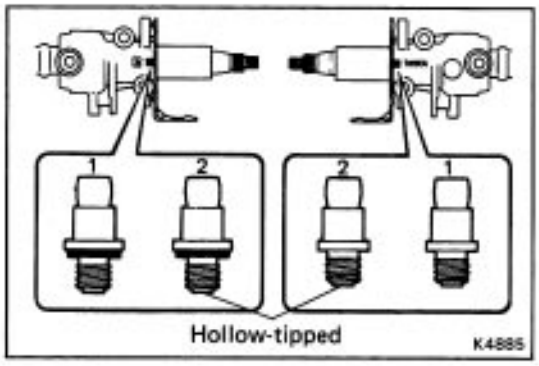

5. SELECT STEERING BOLT AND UPPER COLUMN TUBE

Select the bolt for the left or right side and then select the bolt for the other side because the left and right bolt have different shapes.
HINT: Select the bolt with the plain thread end when the upper column tube mark is 1, and the bolt with the hollow tipped thread end when the mark is 2.

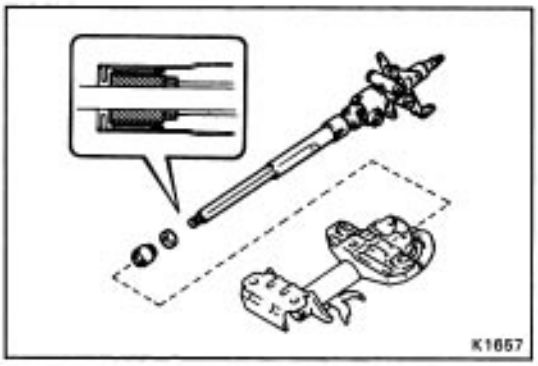

6. INSTALL MAIN SHAFT WITH UPPER COLUMN TUBE

(a) Install the stopper and main shaft collar to the main shaft as shown.
HINT: When installing the main shaft collar on the shaft keep the side with the plastic melted facing upwards.
(b) Install the main shaft to the lower column tube.

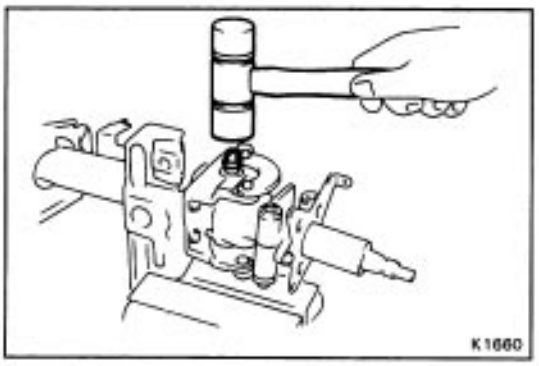

(c) Using a hammer, drive in the steering bolts.
NOTICE: Be careful not to mis–install the left and right bolt.

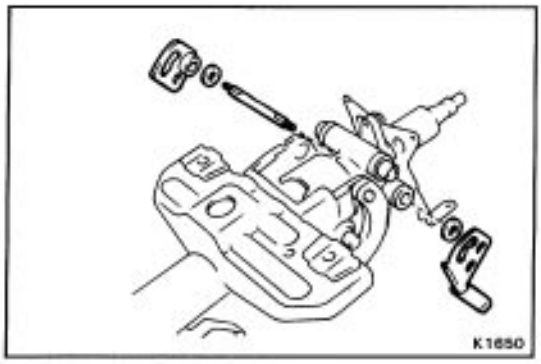

7. INSTALL TILT LEVER LOCK BOLT, TILT LEVER AND TILT SUB LEVER

(a) Install the tilt lever lock bolt to the upper column tube.

(b) Install the tilt lever and tilt sub lever.

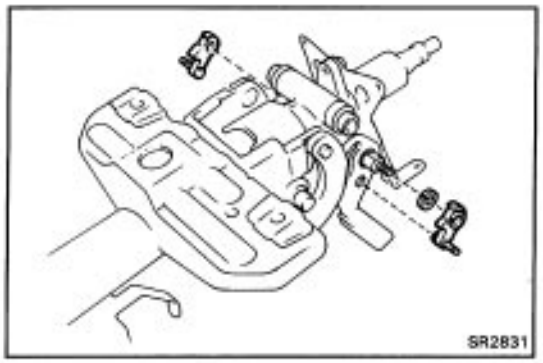

8. INSTALL TWO TILT PAWL STOPPERS

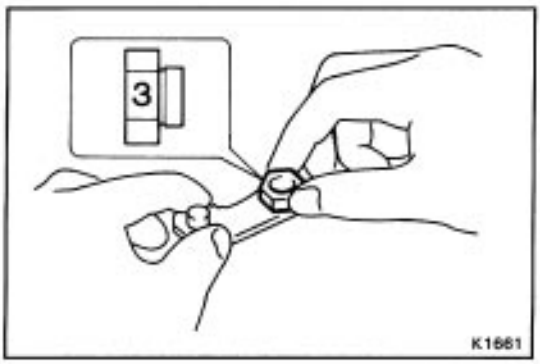

9. SELECT COLLARS FOR TILT PAWL

Select collars which will eliminate all play.

Tilt lever side	Tilt sub lever side	Outer diameter mm (in.)
0	A	11.483–11.493 (0.4521–0.4525)
2	6	11.499–11.509 (0.4527–0.4531)
3	7	11.494–11.504 (0.4525–0.4529)
4	8	11.488–11.498 (0.4523–0.4527)

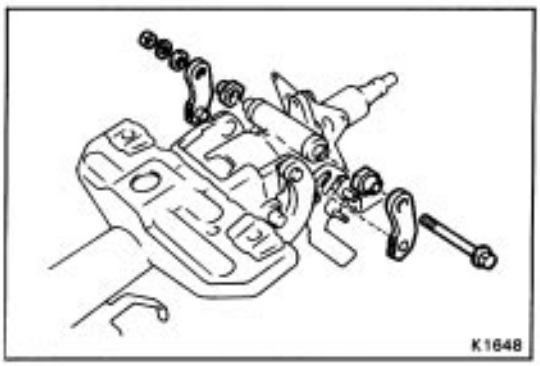

10. INSTALL TWO TILT PAWLS

(a) Insert the collars to the tilt pawl.

(b) Temporarily install the tilt pawls.

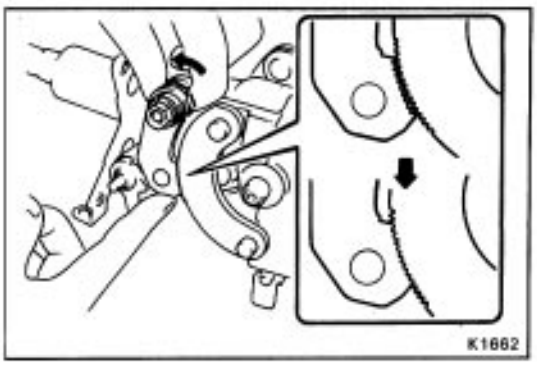

11. ENGAGE AND ADJUST TILT PAWL

(a) Engage the tilt lever side pawl to the center of the ratchet.

(b) While turning the tilt sub lever side collar, engage the tilt sub lever side pawl to the ratchet completely.

(c) Tighten the nut.

Torque: 80 kg–cm (69 in.–lb, 7.8 N–m)

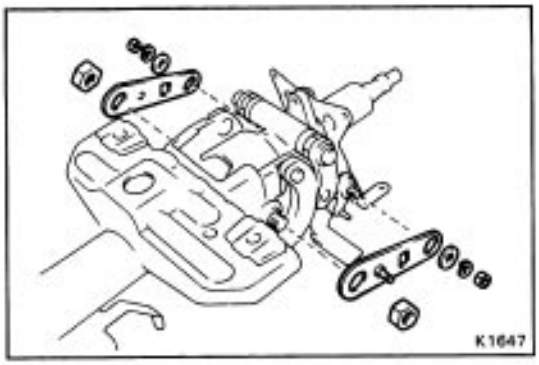

12. INSTALL TWO TILT LEVER RETAINERS

Install the two tilt lever retainers.

Torque:

Tilt lever side 80 kg–cm (69 in.–lb, 7.8 N–m)

Steering bolt side 100 kg–cm (7 ft–lb, 10 N–m)

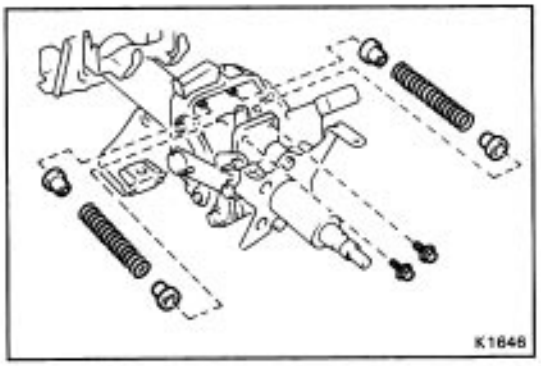

13. INSTALL TWO COMPRESSION SPRINGS

(a) Install the bushings to each spring.

(b) Install the two springs.

(c) Install the two bolts.

Torque: 80 kg–cm (69 in.–lb, 7.8 N–m)

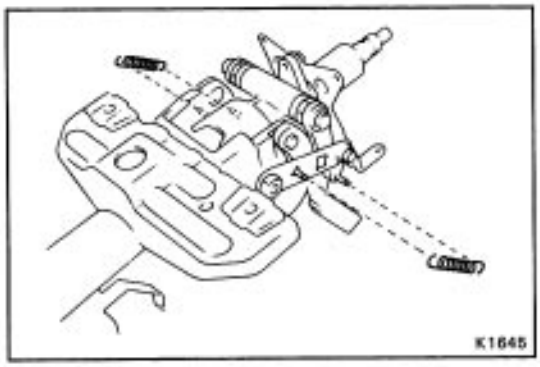

14. INSTALL TWO TENSION SPRINGS

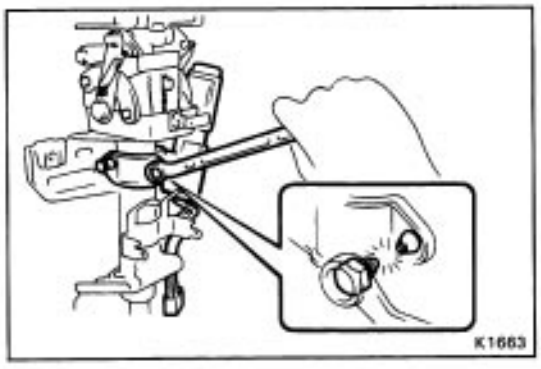

15. INSTALL UPPER BRACKET

(a) Install the upper bracket with two new tapered–head bolts.

(b) Tighten the tapered–head bolts until the bolt heads break off.

16. CHECK OPERATION OF TILT STEERING LEVER

(a) Check that there is no axial play at the end of the mair shaft.

(b) With the main shaft in the neutral position, pull the tilt lever and check that the main shaft rises to the uppermost position.

(c) Lower the main shaft, and check that it locks in the lowermost position.

MANUAL GEAR HOUSING

REMOVAL AND INSTALLATION OF MANUAL GEAR HOUSING (2WD)

Remove and install the parts as shown.

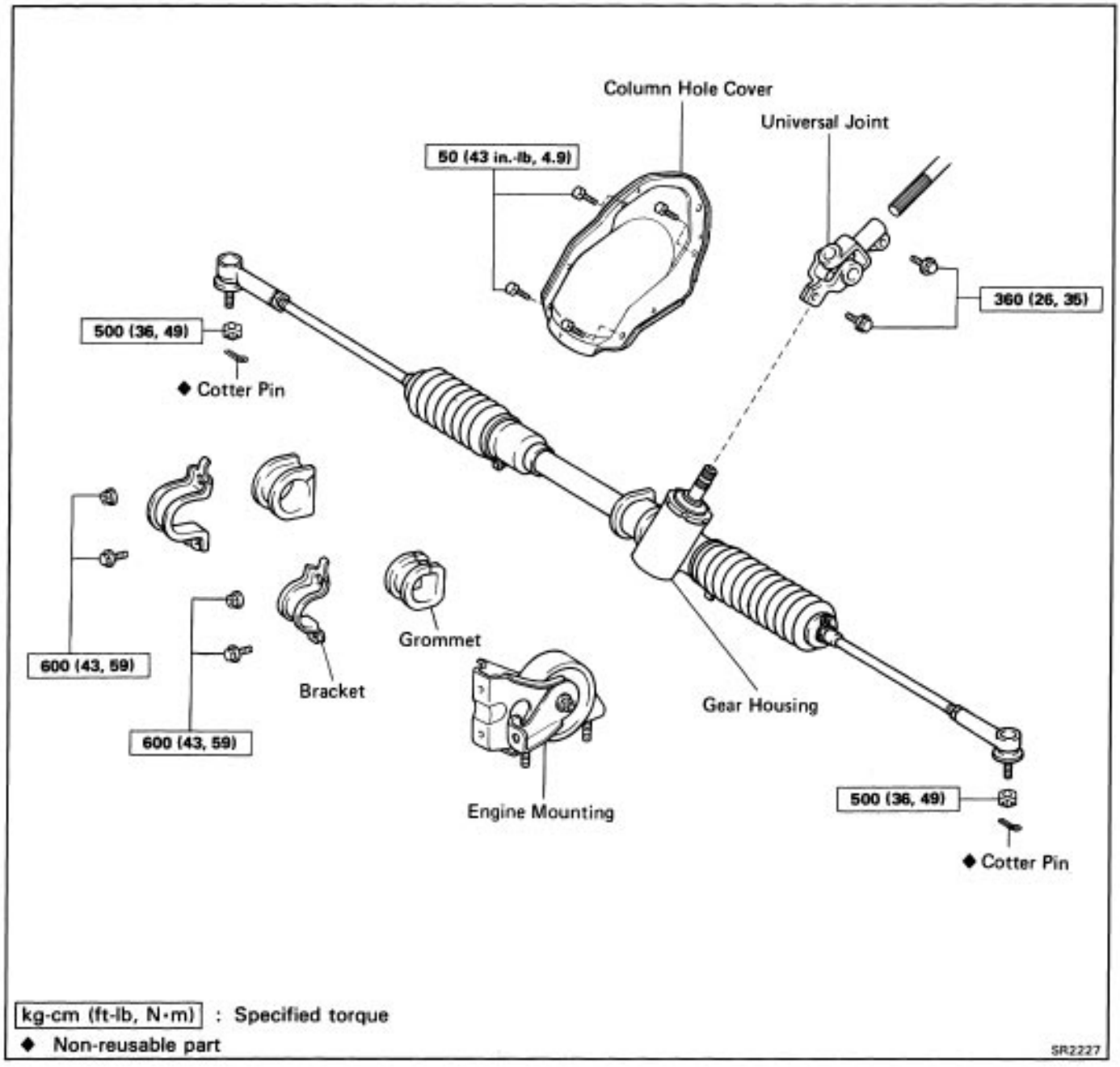

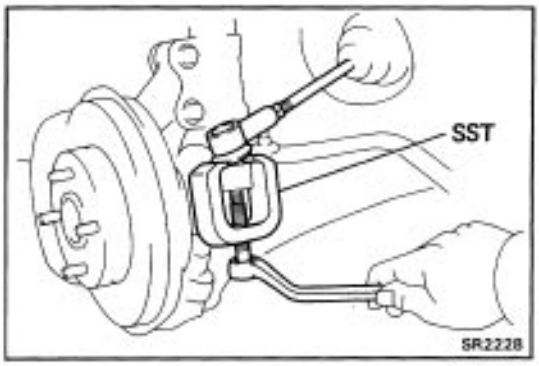

(MAIN POINTS OF REMOVAL AND INSTALLATION)

1. DISCONNECT TIE ROD ENDS

(a) Remove the cotter pins and nuts.

(b) Using SST, disconnect the tie rod ends from the knuckle arms.

SST 09610–55012

2. CHECK TOE–IN AFTER INSTALLING GEAR HOUSING

(See page SA–4)

REMOVAL AND INSTALLATION OF MANUAL GEAR HOUSING (4WD)

Remove and install the parts as shown.

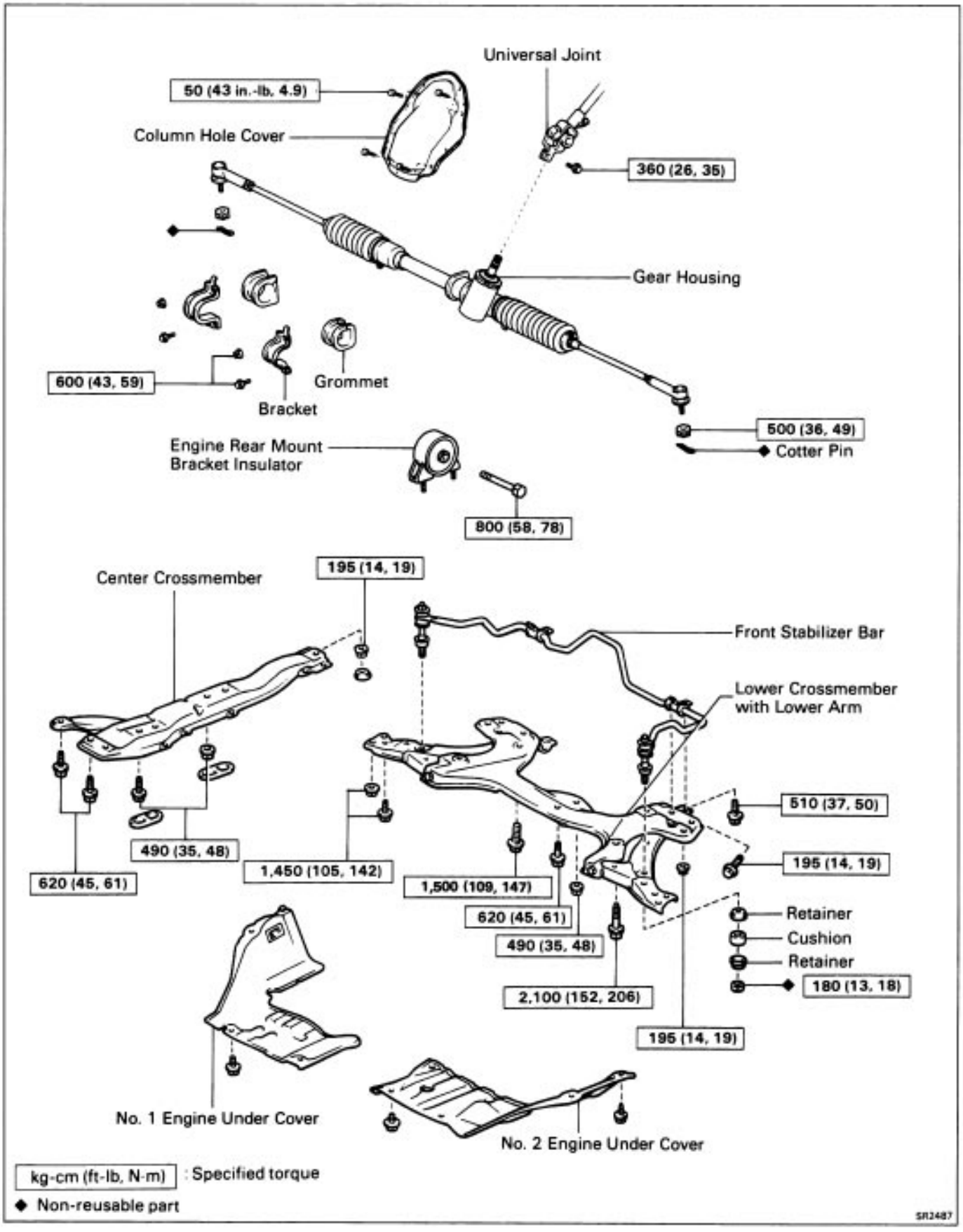

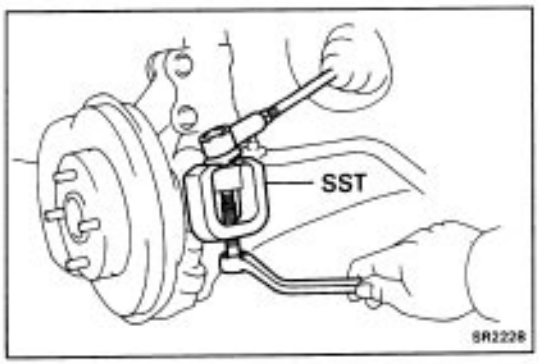

(MAIN POINTS OF REMOVAL AND INSTALLATION)

1. DISCONNECT TIE ROD ENDS

(a) Remove the cotter pins and nuts.

(b) Using SST, disconnect the tie rod ends from the knuckle arms.
SST 09610–55012

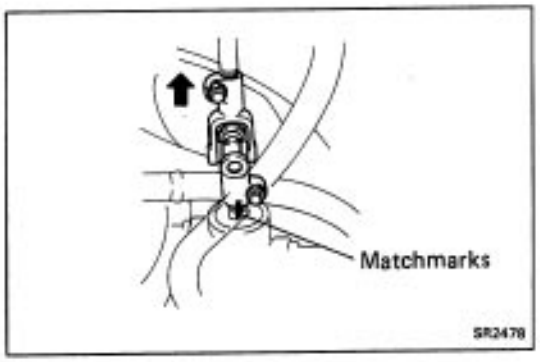

2. DISCONNECT UNIVERSAL JOINT

(a) Place matchmarks on the universal joint and control valve shaft.

(b) Loosen the upper side of universal joint set bolt.

(c) Remove the lower side of universal joint set bolt.

(d) Pull the universal joint upward from the control valve shaft.

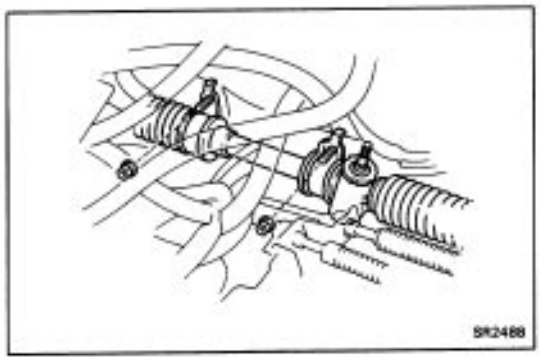

3. REMOVE GEAR HOUSING

(a) Remove the gear housing set nuts.

(b) Attach the engine hoist chain to the engine hangers to support the engine.

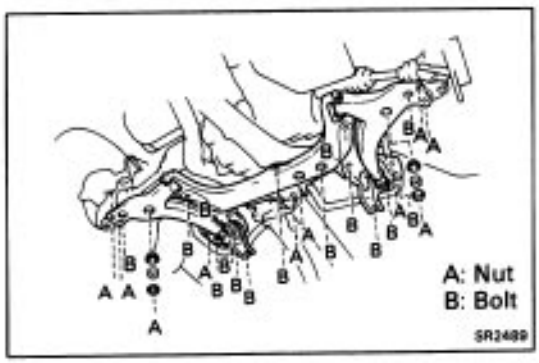

(c) Remove the lower crossmember with lower arm.

(d) Remove the engine under covers and center crossmember.

(e) Remove the bolt and engine rear mount bracket insulator.
HINT: When installing the insulator, retighten the bolt after all parts are installed.
Torque: 800 kg–cm (58 ft–lb, 78 N–m)

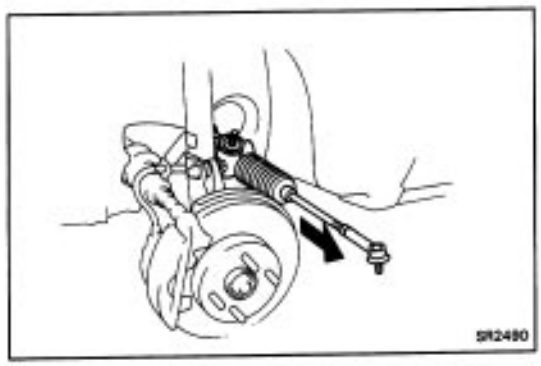

(f) Remove two bolts and two brackets, then slide the gear housing to the LH side to remove it.

(g) Remove two grommets from the gear housing.

COMPONENTS

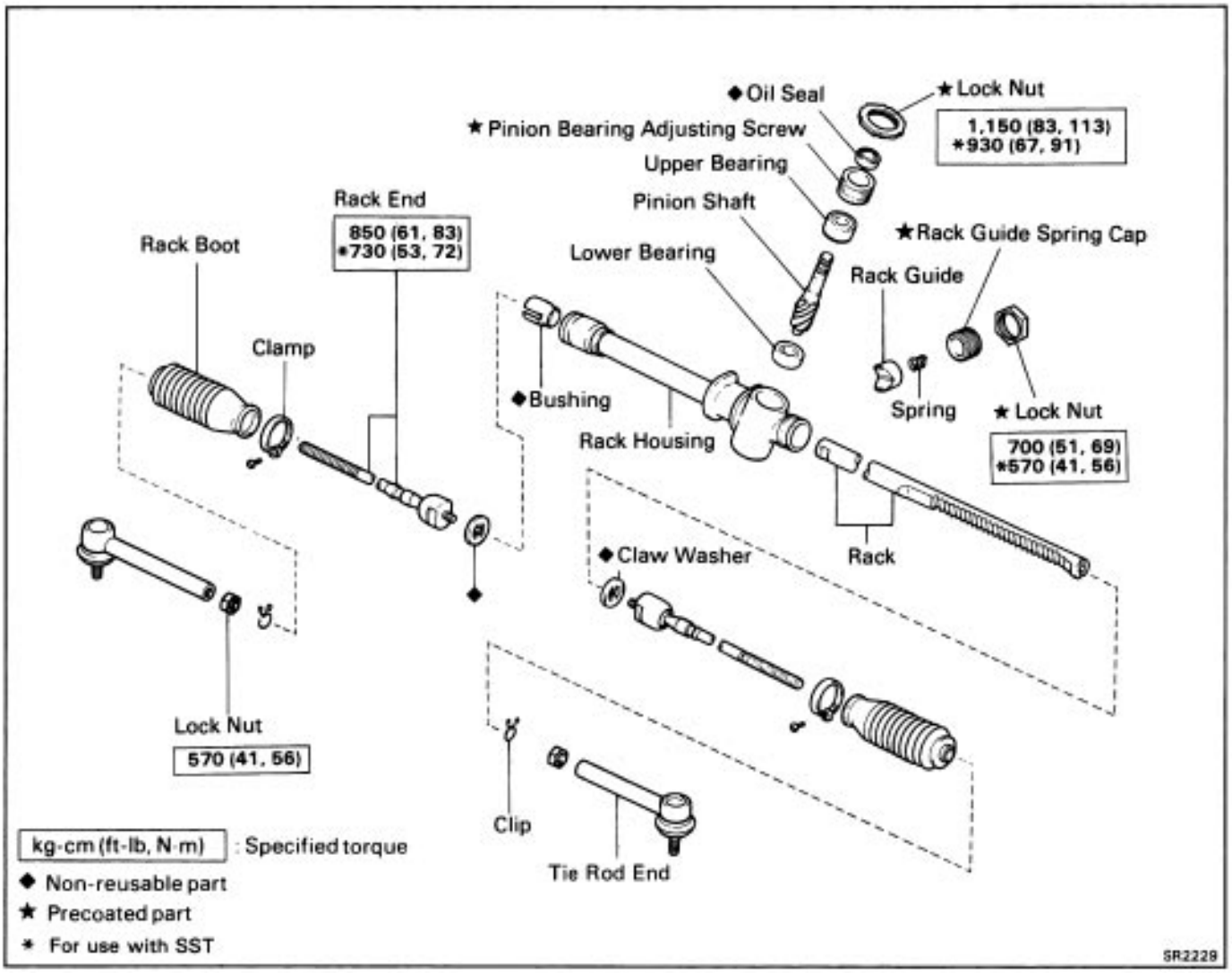

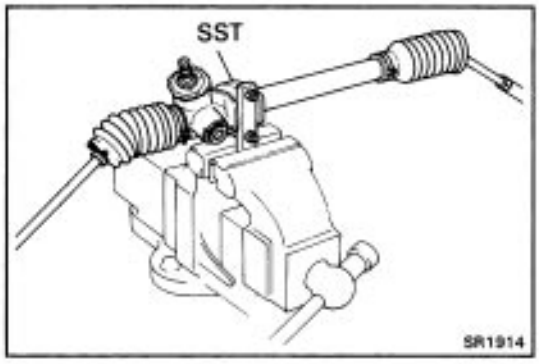

DISASSEMBLY OF GEAR HOUSING

1. CLAMP GEAR HOUSING IN VISE

Using SST, secure the steering gear in a vise.
SST 09612–00012

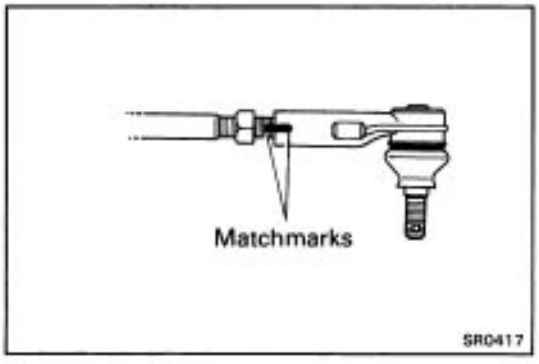

2. REMOVE TIE ROD ENDS

(a) Loosen the lock nut and place the matchmarks on the tie rod end and rack end.
(b) Remove the tie rod ends and lock nuts.

3. REMOVE RACK BOOTS

(a) Remove the clips and clamps.
(b) Remove the rack boots.
(c) Mark the left and right boots accordingly.

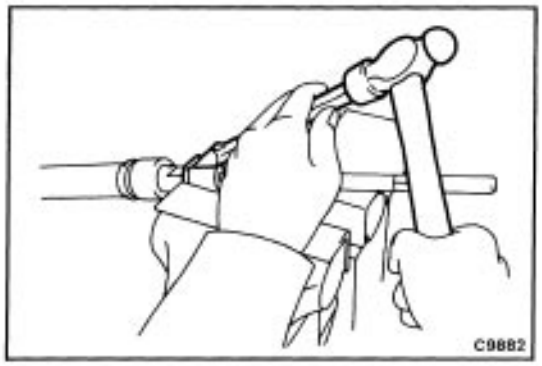

4. REMOVE RACK ENDS AND CLAW WASHERS

(a) Unstake the claw washer.

NOTICE: Avoid any impact to the rack.

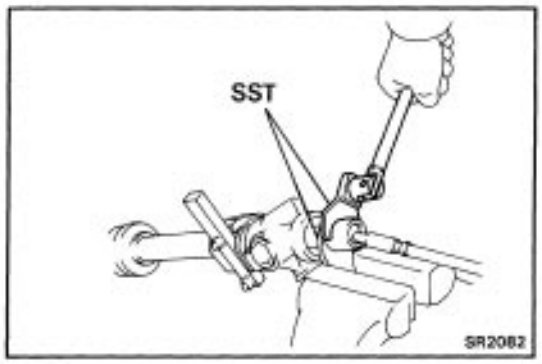

(b) Using SST, remove the rack end.
SST 09612–10093 (09628–10020) and 09612–24014 (09617–24011)

(c) Mark the left and right rack ends.

(d) Remove the claw washer.

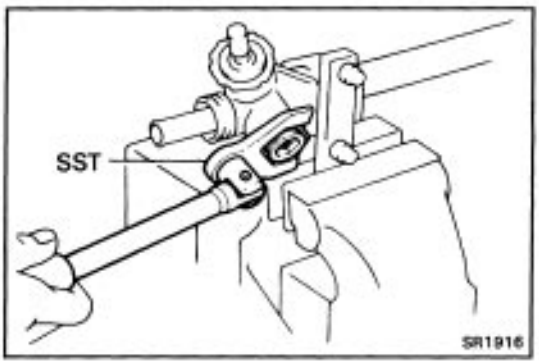

5. REMOVE RACK GUIDE SPRING CAP LOCK NUT

Using SST, remove the rack guide spring cap lock nut.
SST 09612–24014 (09617–24020)

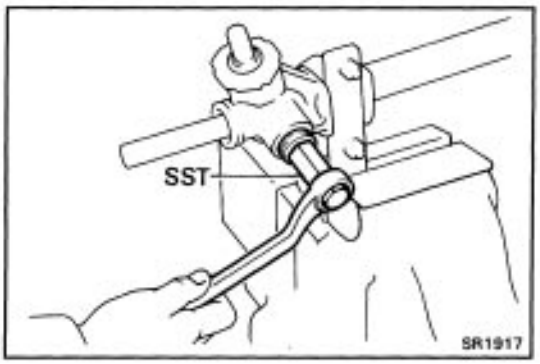

6. REMOVE RACK GUIDE SPRING CAP

Using SST, remove the rack guide spring cap.
SST 09612–24014 (09612–10022)

7. REMOVE SPRING AND RACK GUIDE

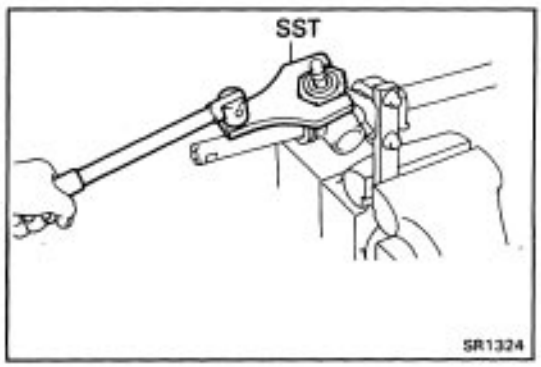

8. REMOVE PINION BEARING ADJUSTING SCREW LOCK NUT

Using SST, remove the pinion bearing adjusting screw lock nut.
SST 09612–10093 (09617–10010)

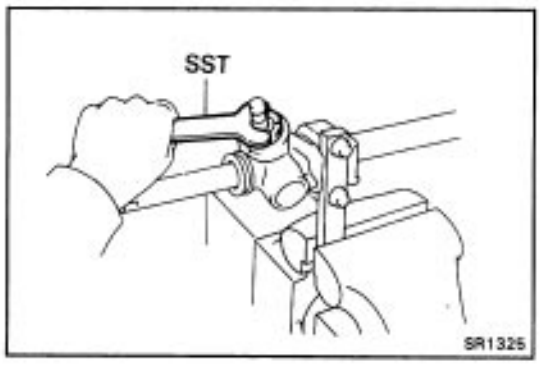

9. REMOVE PINION BEARING ADJUSTING SCREW

Using SST, remove the pinion bearing adjusting screw.
SST 09612–24014 (09616–10020)

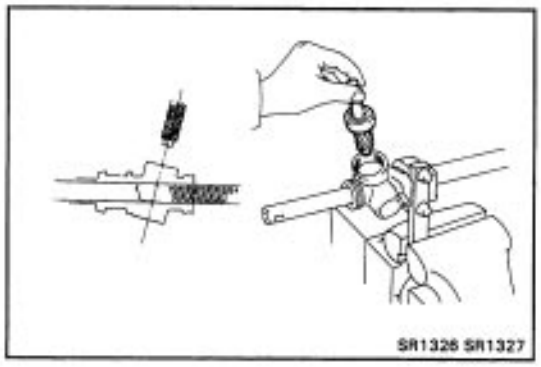

10. REMOVE PINION WITH UPPER BEARING

HINT: Be careful not to damage the serrations.
(a) Fully pull the rack from the housing side and align the rack notched portion with the pinion.
(b) Remove the pinion together with the upper bearing.

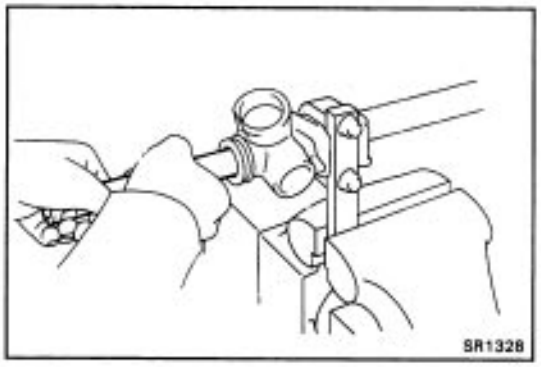

11. REMOVE RACK

Remove the rack from the pinion side without revolving it.
HINT: If the rack is pulled from the tube side, there is a possibility of damaging the bushing with the rack teeth surface.

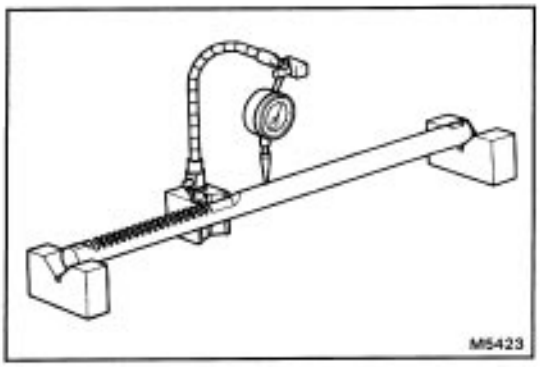

INSPECTION AND REPAIR OF GEAR HOUSING COMPONENTS

1. INSPECT RACK

(a) Check the rack for runout and for teeth wear or damage.

Maximum runout: 0.3 mm (0.012 in.)

(b) Check the back surface for wear or damage.

If faulty, replace it.

NOTICE: Do not use a wire brush when cleaning.

2. IF NECESSARY, REPLACE PINION UPPER BEARING

(a) Using SST, remove the upper bearing.

SST 09950–20017

(b) Using SST, install a new upper bearing.

SST 09612–24014 (09612–10061)

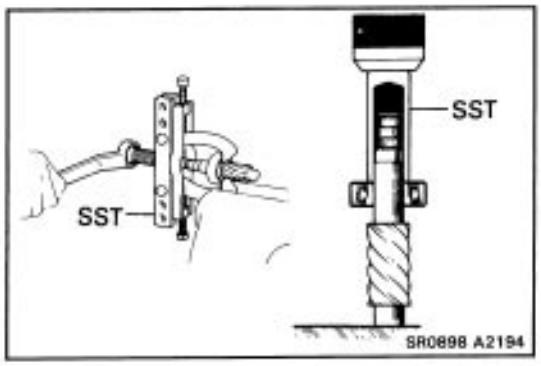

3. IF NECESSARY, REPLACE PINION LOWER BEARING

(a) Heat the rack housing to above 80˚C (1 760F).

(b) Tap the rack housing with a plastic hammer or such to remove the lower bearing by recoil.

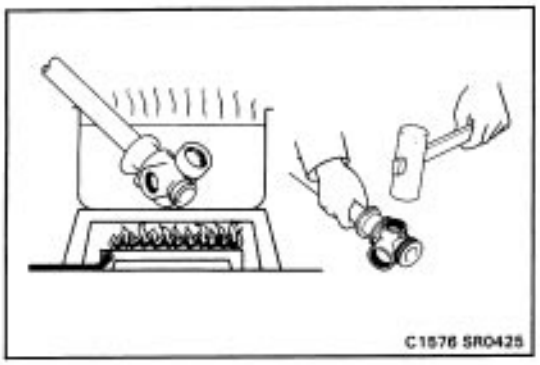

(c) Heat the rack housing to above 80˚C (176˚F).

(d) Using SST, install a new lower bearing.

SST 09631–10010 and 09631–12020

HINT: Observe the correct bearing direction.

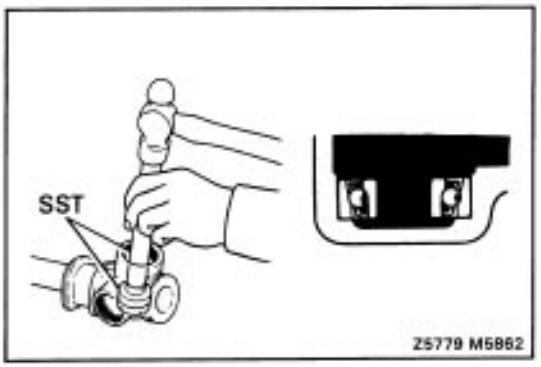

4. IF NECESSARY, REPLACE RACK BUSHING

(a) Using a screwdriver, loosen the three bushing claws and remove the rack bushing from the rack housing.

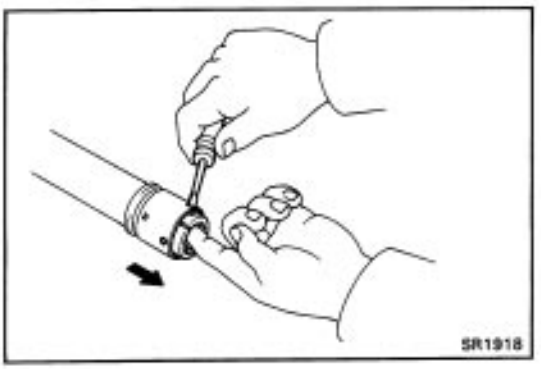

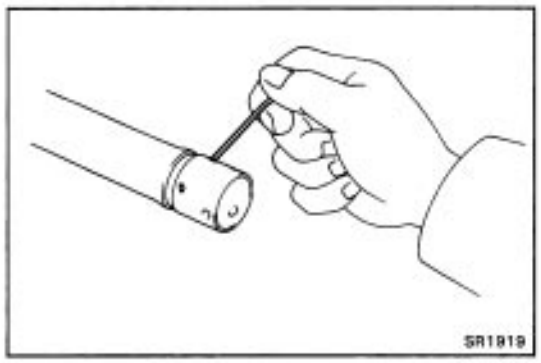

(b) Insure that the tube hole is not clogged with grease.
HINT: If the tube hole is clogged, the pressure inside the boot will change after it is assembled and the handle turned.

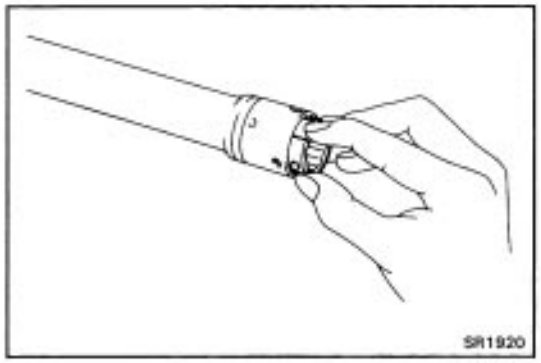

(c) Install a new bushing into the rack housing, making sure to align into the three holes.

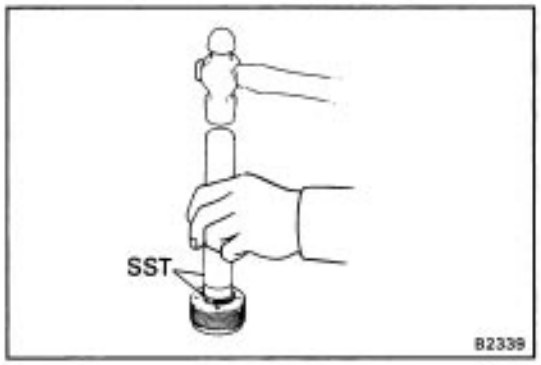

5. IF NECESSARY, REPLACE PINION OIL SEAL

(a) Using SST, remove the pinion oil seal.
SST 09631–10010 and 09631–12020

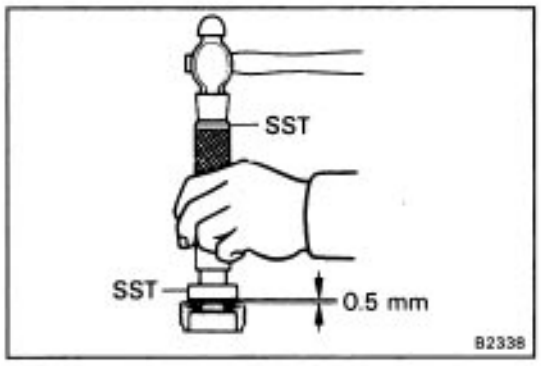

(b) Using SST, drive in a new oil seal until it is protruding 0.5 mm(0.020 in.).
SST 09631–10010 and 09631–12020

ASSEMBLY OF GEAR HOUSING

(See page SR–20)

1. PACK MOLYBDENUM DISULPHIDE LITHIUM BASE GREASE AS SHOWN:

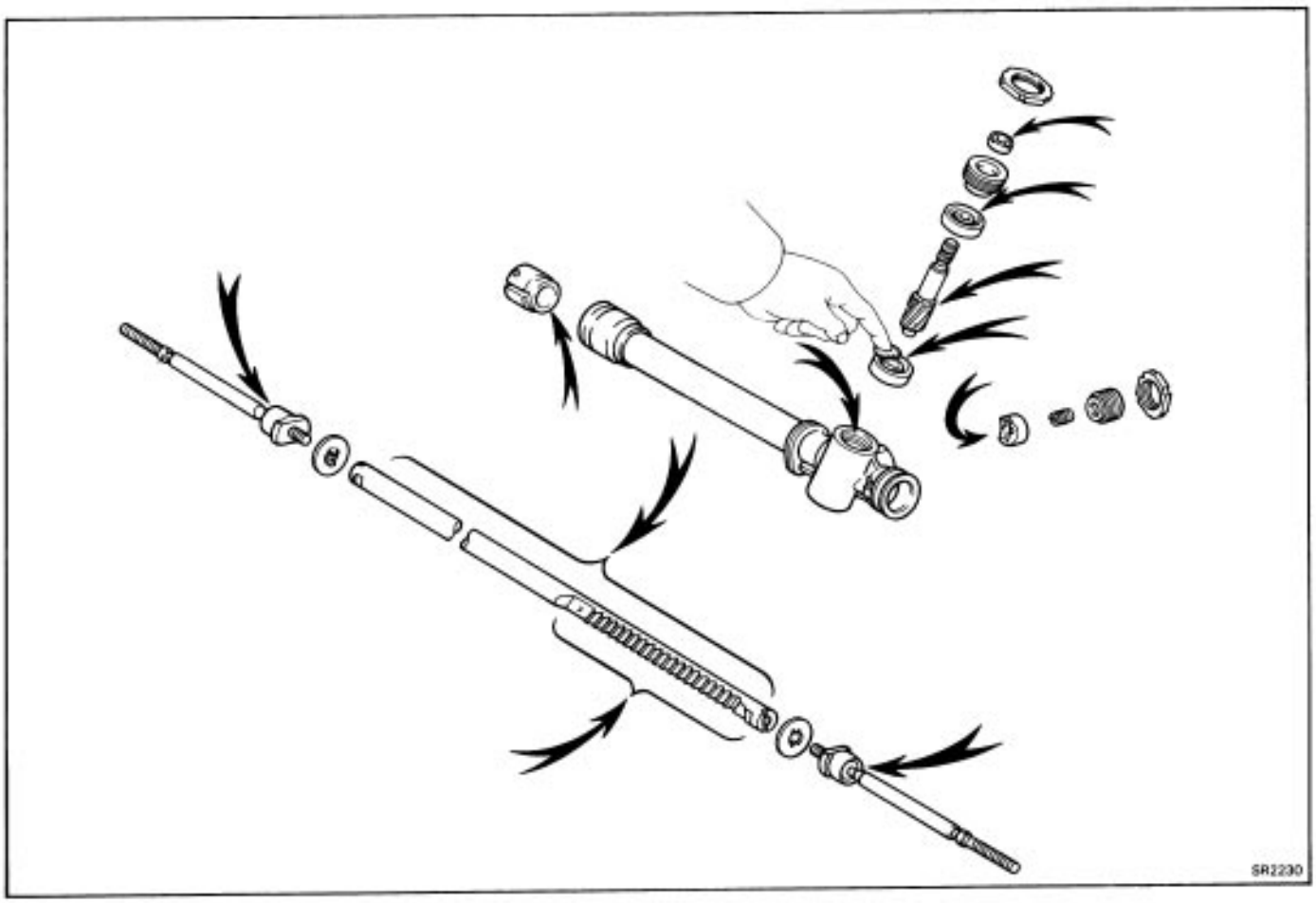

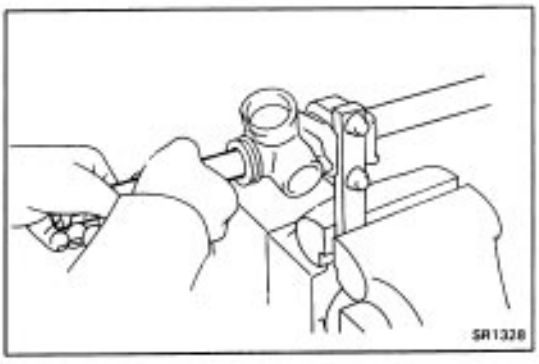

2. INSTALL RACK INTO RACK HOUSING

(a) From the pinion side, install the rack into the rack housing.

(b) Set the rack notched side so that the pinion can be positioned inside.

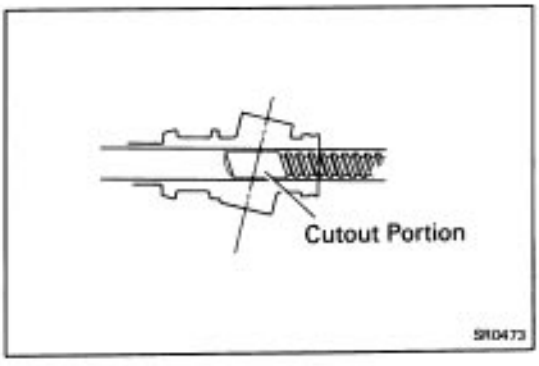

(c) Line up the cutout portion of the rack with the pinion.

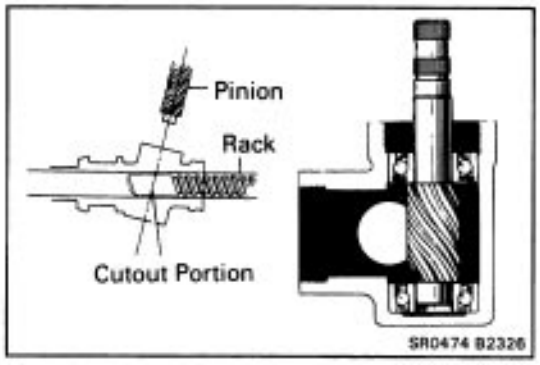

3. INSTALL PINION INTO HOUSING

Insure that the pinion end is securely in the lower bearing.

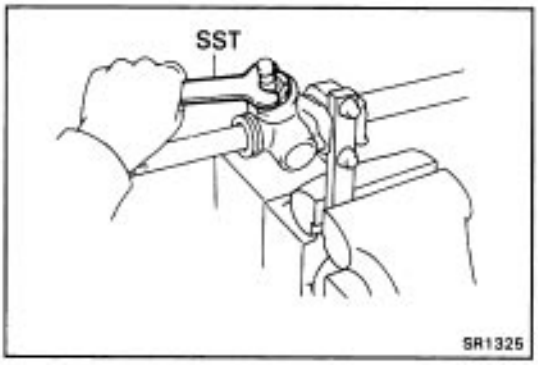

4. INSTALL PINION BEARING ADJUSTING SCREW

(a) Apply sealant to 2 or 3 threads of the screw.

Sealant: Part No. 08833–00080, THREE BOND 1344, LOCTITE 242 or equivalent

(b) Using SST, install the pinion bearing adjusting screw.

SST 09612–24014 (09616–10020)

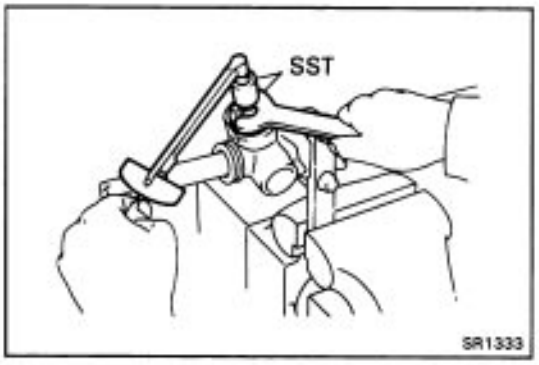

5. ADJUST PINION PRELOAD

(a) Line up the cutout portion of the rack with the pinion.

(b) Using SST, tighten the pinion bearing adjusting screw to the point where the turning torque of the pinion is 3.7 kg–cm (3.2 in.–lb, 0.4 N–m).

SST 09612–24014 109616–10010, 09616–10020Y

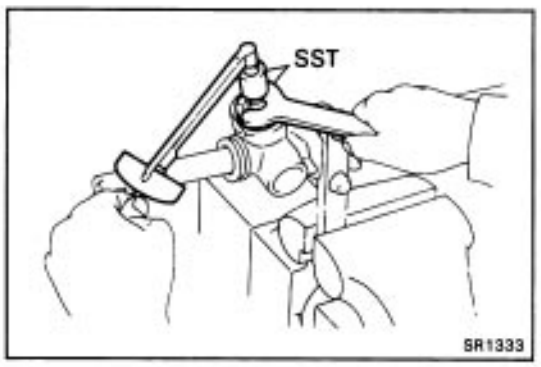

(c) Using SST, loosen the pinion bearing adjusting screw to the point where the turning torque of the pinion is 2.3–3.3 kg–cm (2.0–2.9 in.–lb, 0.2–0.3 N–m).

SST 09612–24014 (09616–10010, 09616–10020)

Preload (turning): 2.3–3.3 kg–cm (2.0–2.9 in.–lb, 0.2–0.3 N–m)

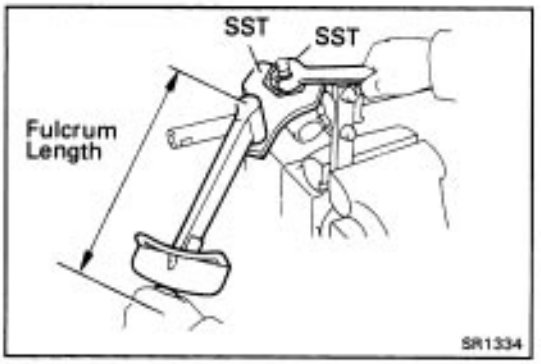

6. INSTALL PINION BEARING ADJUSTING SCREW LOCK NUT

(a) Apply sealant to 2 or 3 threads of the lock nut.

Sealant: Part No. 08833–00080, THREE BOND 1344, LOCTITE 242 or equivalent

(b) Using SST, install the lock nut.

SST 09612–10093 (09617–10010, 09616–10020)

Torque: 930 kg–cm (67 ft–lb, 91 N–m)

HINT: Use a torque wrench with a fulcrum length of 425 mm (16.73 in.).

(c) Recheck the pinion preload.

If incorrect, readjust.

Preload (turning): 2.3–3.3 kg–cm (2.0–2.9 in.–lb, 0.2–0.3 N–m)

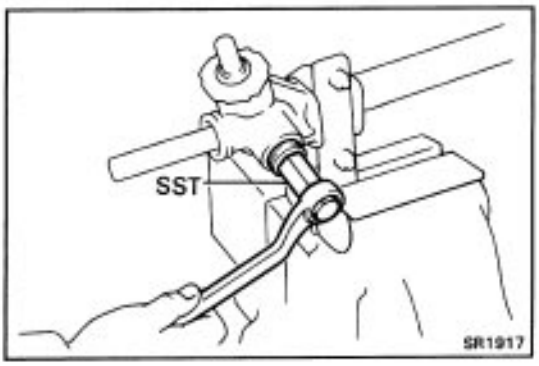

7. INSTALL RACK GUIDE AND SPRING

8. INSTALL RACK GUIDE SPRING CAP

(a) Apply sealant to 2 or– 3 threads of the cap.

Sealant: Part No. 08833–00080, THREE BOND 1344, LOCTITE 242 or equivalent

(b) Mesh the rack with the pinion.

(c) Using SST, temporarily install the rack guide spring cap.

SST 09612–24014 (09612–10022)

9. ADJUST TOTAL PRELOAD

(a) Using SST, tighten the rack guide spring cap.

SST 09612–24014 (09612–10022)

Torque: 50 kg–cm (43 in.–lb, 4.9 N–m)

(b) Turn the pinion shaft right and left one or two times.

(c) Using SST, count the total pinion rotations and turn the pinion back half of that number.

SST 09612–24014 (09616–10010)

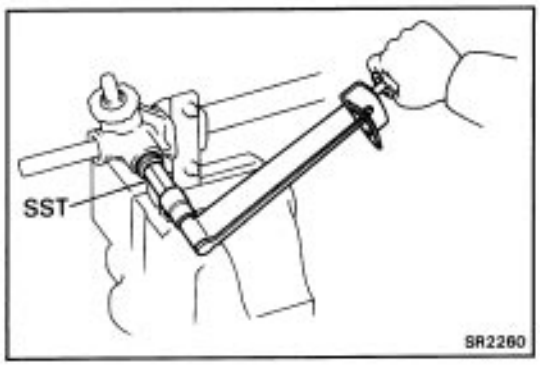

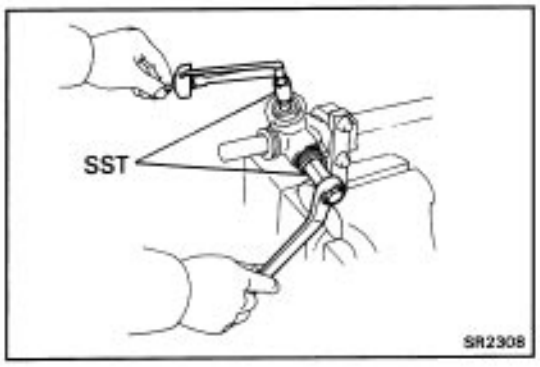

(d) Using SST, while gradually loosening the rack guide spring cap, measure and adjust the preload.

SST 09612–24014 (09612–10022, 09616–10010)

Preload (Turning): 10 –13 kg–cm (8.7–11.3 in.–lb, 1.0–1.3 N–m)

HINT: When measuring the preload, measure within one rotation from the neutral position in both directions.

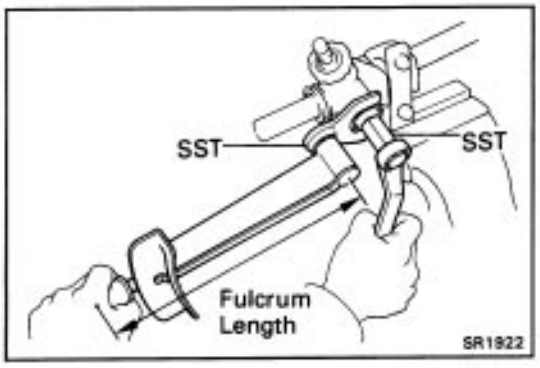

10. INSTALL RACK GUIDE SPRING CAP LOCK NUT

(a) Apply sealant to 2 or 3 threads of the lock nut.

Sealant: Part No. 08833–00080, THREE BOND 1344, LOCTITE 242 or equivalent

(b) Using SST, torque the lock nut.

SST 09612–24014 (09612–10022, 09617–24020)

Torque: 570 kg–cm (41 ft–lb, 56 N–m)

HINT: Use a torque wrench with a fulcrum length of 340 mm (13.39 in.).

(c) Recheck the total preload.

11. INSTALL RACK ENDS AND CLAW WASHERS

(a) Install new claw washers.

HINT: Align the claws of the claw washer with the rack grooves.

(b) Using SST, install and torque the rack end.

SST 09612–10093 (09628–10020) and 09612–24014 (09617–24011)

Torque: 730 kg–cm (53 ft–lb, 72 N–m)

HINT: Use a torque wrench with a fulcrum length of 340 mm (13.39 in.).

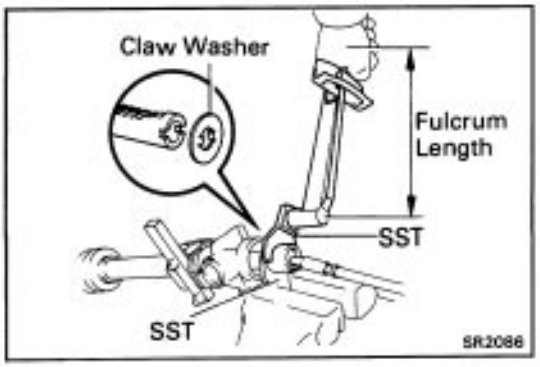

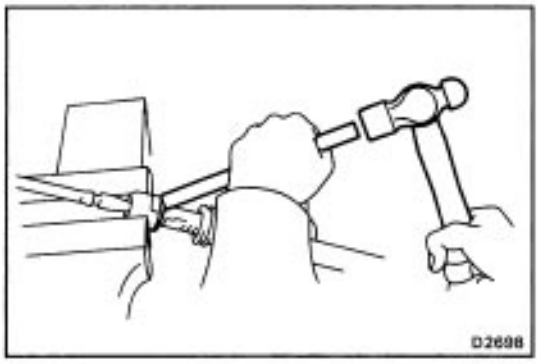

(c) Stake the claw washer.

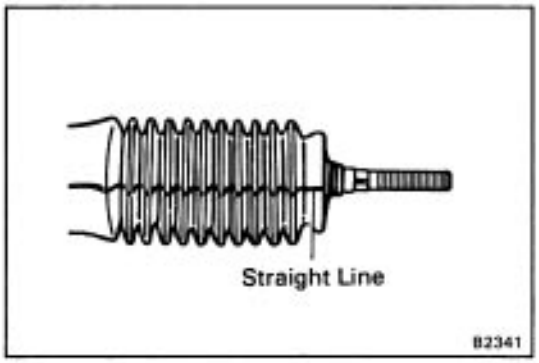

12. INSTALL RACK BOOTS

(a) Install the rack boot.

HINT: Be careful not to damage or twist the boot.

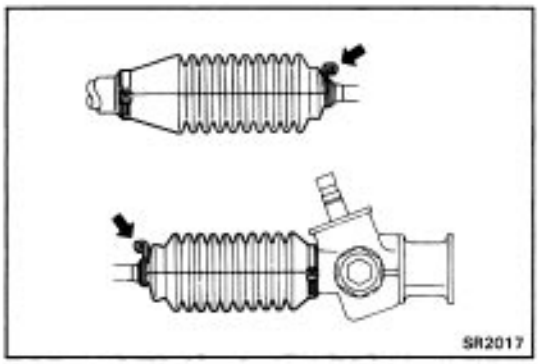

(b) Install the clamp and clip.

HINT: Face the open ends of the clip outward, as shown, to avoid damage to the boot.

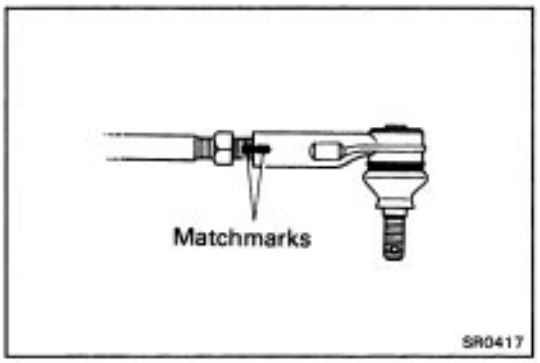

13. INSTALL TIE ROD ENDS

(a) Screw the lock nut and tie rod end onto the rack end until the matchmarks are aligned.

(b) After adjusting toe–in, torque the lock nut.

Torque: 570 kg–cm (41 ft–lb, 56 N–m)

POWER STEERING

Description

PRINCIPLES OF POWER STEERING

Power steering is one type of hydraulic device for utilizing engine power to reduce steering effort. Consequently, the engine is used to drive a pump to develop fluid pressure, and this pressure acts on a piston within the power cylinder so that the piston assists the rack effort. The amount of this assistance depends on the extent of pressure acting on the piston. Therefore, if more steering force is required, the pressure must be raised. The variation in the fluid pressure is accomplished by a control valve which is linked to the steering main shaft.

NEUTRAL (STRAIGHT–AHEAD) POSITION

Fluid from the pump is sent to the control valve. If the control valve is in the neutral position, all the fluid will flow through the control valve into the relief port and back to the pump. At this time, hardly any pressure is created and because the pressure on the cylinder piston is equal on both sides, the piston will not move in either direction.

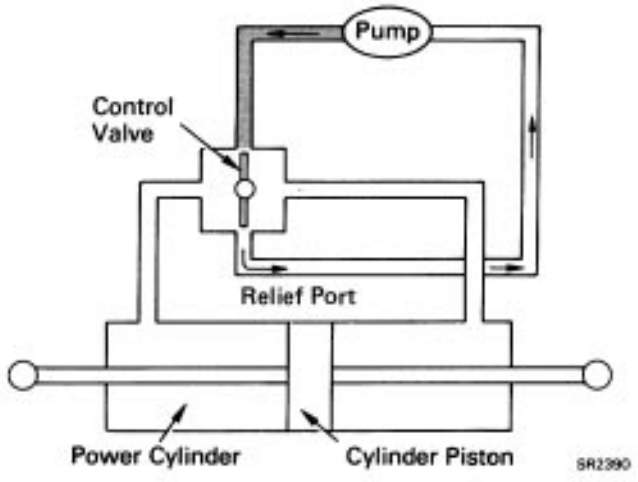

WHEN TURNING

When the steering main shaft is turned in either direction, the control valve also moves, closing one of the fluid passages. The other passage then opens wider, causing a change in fluid flow volume and, at the same time, pressure is created. Consequently,
3 pressure difference occurs between both sides of the piston and the piston moves in the direction of the lower pressure so that the fluid in the cylinder s forced back to the pump through the control valve.

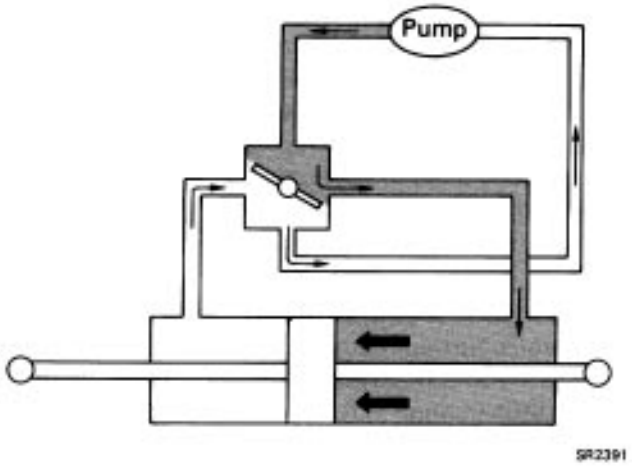

SERVICE HINT

Troubles with the power steering system are usually concerned with hard steering due to the fact that there is no assist. In such cases, before attempting to make repairs, it is necessary to determine whether the trouble lies with the pump or with the gear housing. To do this, an on–vehicle inspection can be made by using a pressure gauge.

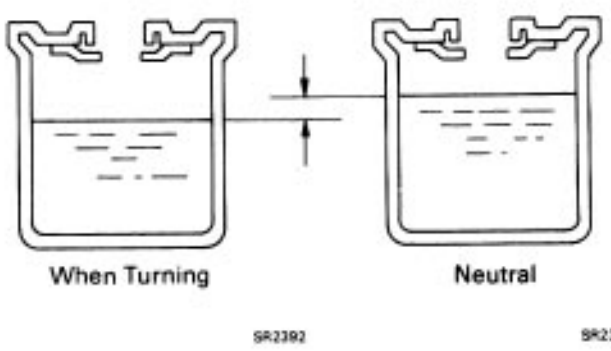

ON–VEHICLE INSPECTION

Power steering is a hydraulic device and problems are normally due to insufficient fluid pressure acting on the piston. This could be caused by either the pump not producing the specified fluid pressure or the control valve in the gear housing not functioning properly so that the proper fluid pressure can not be obtained.

If the fault lies with the pump, the same symptoms will generally occur whether the steering wheel is turned fully to the right or left. On the other hand, if the fault lies with the control valve, there will generally be a difference between the amount of assist when the steering wheel is turned to the left and right, causing harder steering. However, if the piston seal of the power cylinder is worn, there will be a loss of fluid pressure whether the steering wheel is turned to the right or left and the symptoms will be the same for both.

Before performing an on–vehicle inspection, a check must first be made to confirm that the power steering system is completely free of any air. If there is any air in the system, the volume of this air will change when the fluid pressure is raised, causing a fluctuation in the fluid pressure so that the power steering will not function properly. To determine if there is any air in the system, check to see if there is a change of fluid level in the reservoir tank when the steering wheel is turned fully to the right or left.

For example, if there is air in the system, it will be compressed to a smaller volume when the steering wheel is turned, causing a considerable drop in the fluid level. If the system is free of air, there will be very little change in the level even when the fluid pressure is raised. This is because the fluid, being a liquid, does not change volume when compressed.

The little change in the fluid level is due to expansion of the hoses between the pump and gear housing when pressure rises.

Also, air in the system will sometimes result in an abnormal noise occurring from the pump or gear housing when the steering wheel is fully turned in either direction.

This on–vehicle inspection must be performed every time to ensure that the power steering system is working properly after overhauling or repairing the pump or gear housing.

VANE PUMP

The main component parts of the vane pump, such as the cam ring, rotor, vanes and flow control valve are high precision parts and must be handled carefully. Also, because this pump produces a very high fluid pressure, O–rings are used for sealing each part. When reassembling the pump, always use new 0–rings.

In the flow control valve, there is a relief valve which controls the maximum pressure of the pump.

The amount of this maximum pressure is very important; if it is too low, there will be insufficient power steering assist and if too high, it will have an adverse effect on the pressure hoses, oil seals, etc. If the maximum pressure is either too high or too low due to a faulty relief valve, do not disassemble or adjust the relief valve, but replace the flow control valve as an assembly.

The clearance between the flow control valve and pump body installation hole is very important. After manufacture, the factory measures the size of the installation hole and outer circumference of the flow control valve, and punches a mark accordingly.
Therefore, when replacing the flow control valve, be sure to do so with one having the same mark in order to insure the proper clearance.

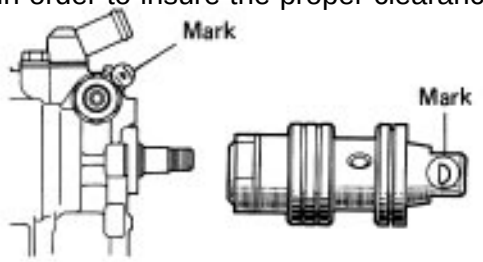

SR2307 SR0555

The functional parts of the pump which produce fluid pressure are the cam ring, rotor and vanes, and these should be checked for wear. If the clearance between each is not within standard when reassembling, any worn parts should be replaced.
In this case, the replaced cam ring and rotor should be of the same length (have the same mark), and the vanes should be replaced with those having a length corresponding to that mark, otherwise the proper thrust clearance cannot be obtained. If there is too much thrust clearance, there will be insufficient fluid pressure at low speeds. If there is too little thrust clearance, it may result in seizure of the vanes.


SR3191

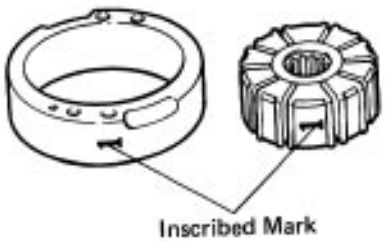

SR2673

GEAR HOUSING

If the gear housing is secured directly in a vise during overhaul; there is danger of deforming it, so always first secure it in the SST provided (rack & pinion steering rack housing stand) before placing it in the vise.

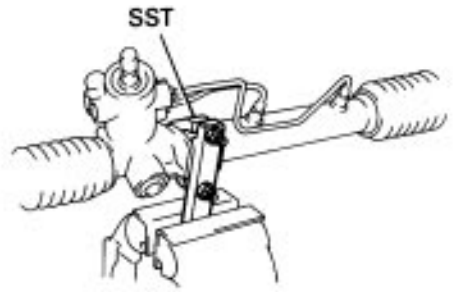

The oil seals on both sides of the power cylinder are for the prevention of leakage of the high pressure fluid which acts on the piston. Always use new oil seals when reassembling and be very careful not to scratch or damage them. Because of the high pressure, even the slightest scratch will cause fluid leakage, resulting in an inoperative power steering system.
Also, be very careful not to scratch the sliding portion of the rack which makes contact with the oil seals. When removing the rack ends from the rack, it is very easy to cause a burr when holding the tip of the rack with a wrench. Therefore, before assembling the rack, first check the tip for burrs and remove any with an oil stone.
Teflon rings are used for the piston and control valve. These teflon rings are highly durable against wear, but if it is necessary to replace them, be careful not to stretch the new ones. After installing a teflon ring into its groove, snug it down into the groove before assembly of the cylinder or housing to prevent possible damage.

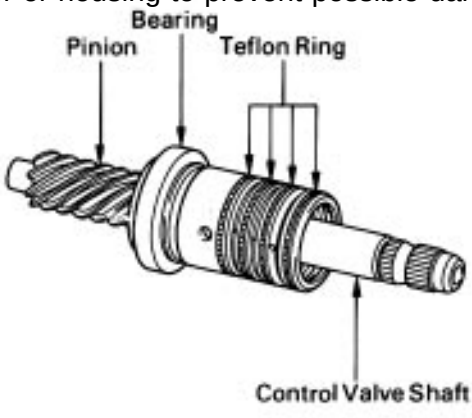

SR2400

As with the rack and pinion type steering, preload is very important. If the preload is not correct, it could result in such trouble as steering wheel play or shimmy or lack of durability, so always make sure that it is correct.

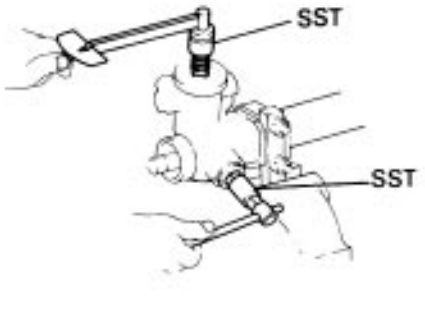

IDLE–UP DEVICE

The pump produces the maximum fluid pressure when the steering wheel is turned fully to the right or left and, at this time, there is a maximum load on the pump which causes a decrease in engine idle rpm. To solve this problem, vehicles are equipped with an idle–up device which acts to raise the engine idle rpm whenever there is a heavy load on the pump.

On EFI engines, when the piston of the air control valve is pushed by fluid pressure, the air valve opens and the volume of air by–passing the throttle valve is increased to regulate engine rpm. (4A–FE Engine)

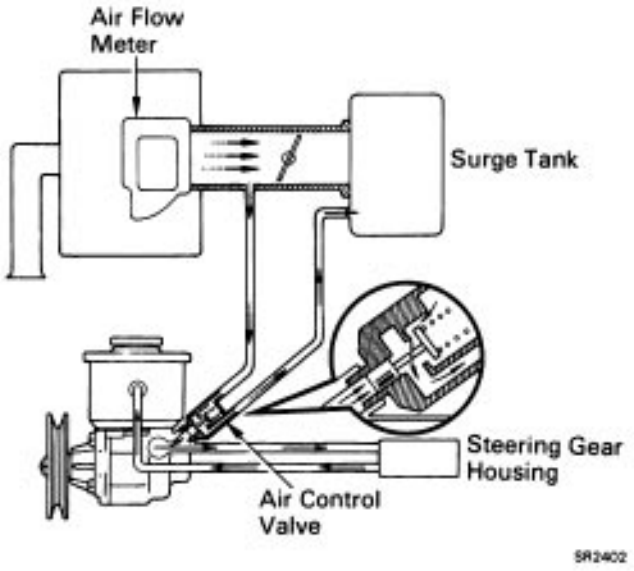

The idle–up device functions to raise engine idle rpm when pump fluid pressure acts on the air control valve, installed to the pump body or gear housing, to control the flow of air.

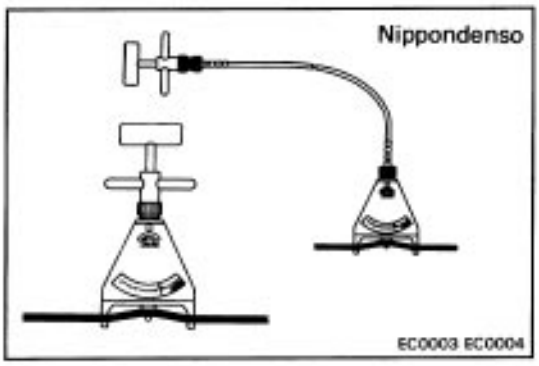

On–Vehicle Inspection

CHECK DRIVE BELT TENSION

Using a belt tension gauge, check the drive belt tension.

Belt tension gauge:

Nippondenso	**BTG–20 (95506–00020) or**
Borroughs	**No.BT–33–73F**

Drive belt tension:

[4A–FE Engine]

New belt	**125 ± 25 lb .**
Used belt	**80 ± 20 lb**

[4A–GE Engine]

New belt	**175 ± 5 lb**
Used belt	**115 ± 20 lb**

HINT:

- ”New belt” refers to a belt which has been less than 5 minutes on a running engine.
- ”Used belt” refers to a belt which has been used on a running engine for 5 minutes or more.
- After installing the drive belt, check that it fits properly in the ribbed grooves.

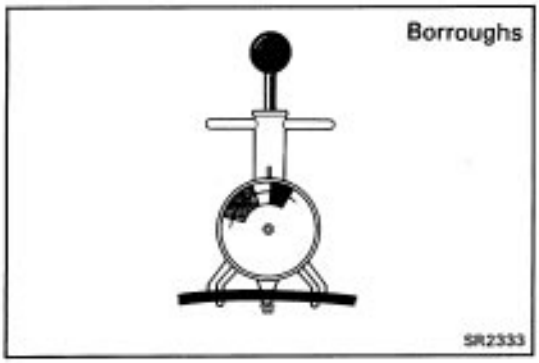

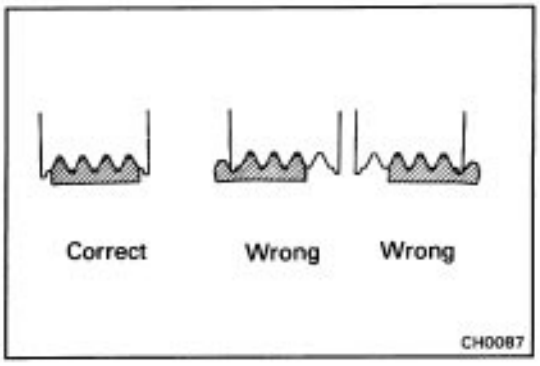

FLUID LEVEL CHECK

1. KEEP VEHICLE LEVEL

2. BOOST FLUID TEMPERATURE

With the engine idling at 1,000 rpm or less, turn the steering wheel from lock to lock several times to boost fluid temperature.

Fluid temperature: 80°C (176˚F)

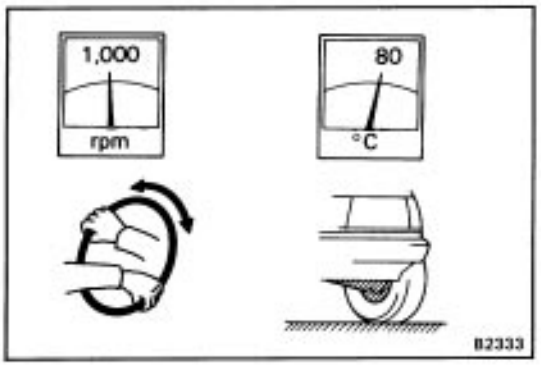

3. CHECK FOR FOAMING OR EMULSIFICATION

HINT: Foaming and emulsification indicate either the existence of air in the system or that the fluid level is too low.

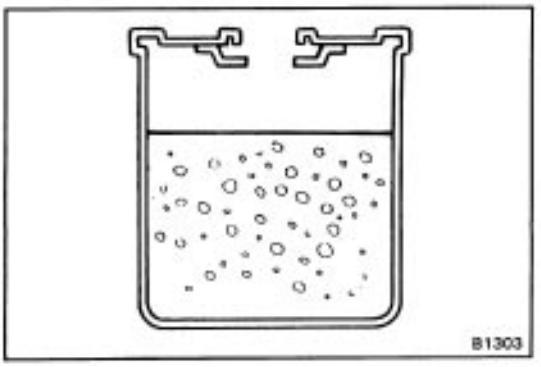

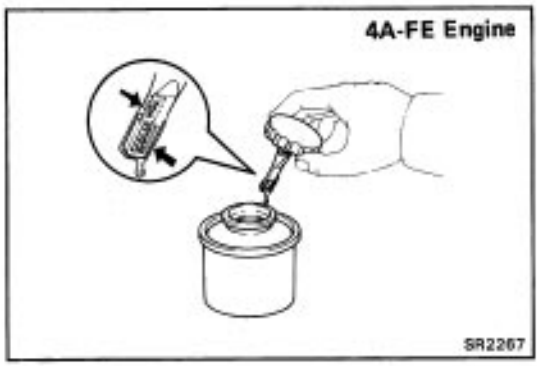

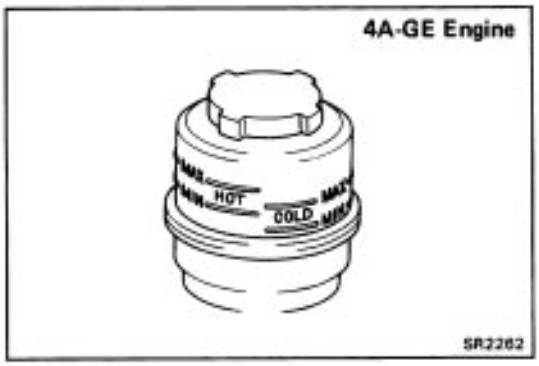

4. CHECK FLUID LEVEL IN RESERVOIR

Check the fluid level and add fluid if necessary.

Fluid: ATF DEXRON® II

HINT: Check that the fluid level is within the HOT LEVEL of the dipstick or tank. If the fluid is cold, check that it is within the COLD LEVEL of the dipstick or tank.

CHECK IDLE–UP

1. WARM UP ENGINE

2. TURN AIR CONDITIONER SWITCH OFF

3. CHECK IDLE–UP

(a) Fully turn the steering wheel.

(b) Check that the engine rpm decreases when the air control valve hose is pinched.

(c) Check that the engine rpm increases when the air control valve hose is released.

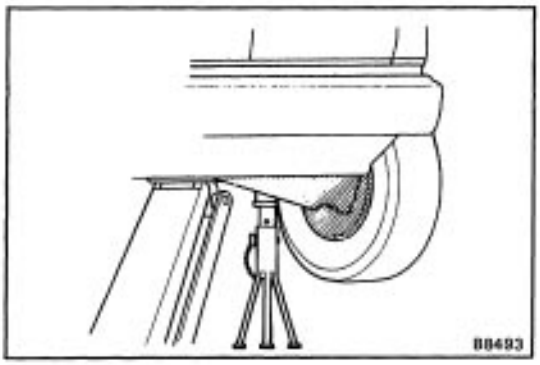

REPLACEMENT OF POWER STEERING FLUID

1. JACK UP FRONT OF VEHICLE AND SUPPORT IT WITH STANDS

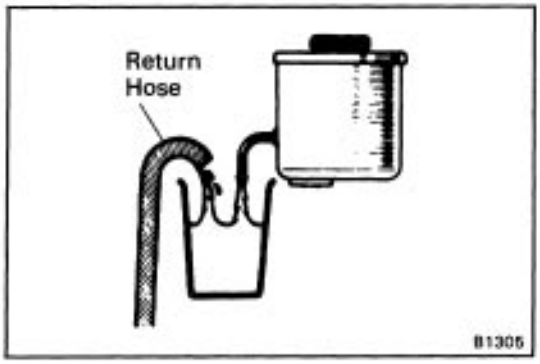

2. REMOVE FLUID RETURN HOSE FROM RESERVOIR TANK AND DRAIN FLUID INTO CONTAINER

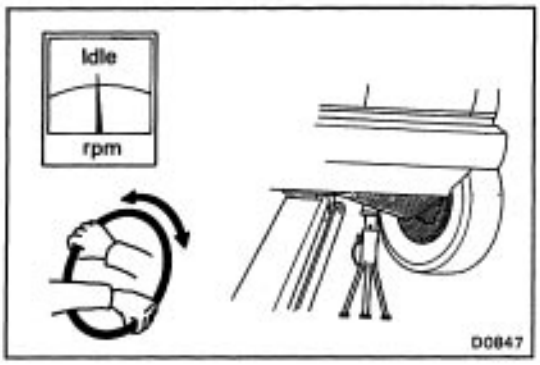

3. WITH ENGINE IDLING, TURN STEERING WHEEL FROM LOCK TO LOCK WHILE DRAINING FLUID

4. STOP ENGINE

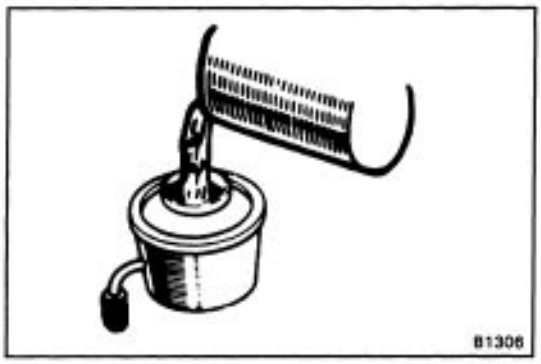

5. FILL RESERVOIR TANK WITH FRESH FLUID
Fluid: ATF DEXRON® II

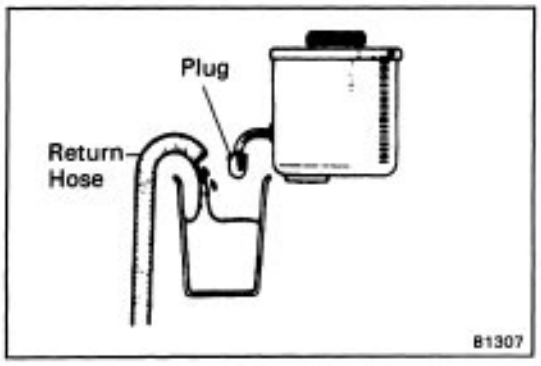

6. START ENGINE AND RUN IT AT 1,000 RPM

After 1 or 2 seconds, fluid will begin to discharge from the return hose. Stop the engine immediately at this time.

NOTICE: Take care that some fluid remains left in the reservoir tank.

7. REPEAT STEPS 5 AND 6 FOUR OR FIVE TIMES UNTIL THERE IS NO MORE AIR IN FLUID

8. CONNECT RETURN HOSE TO RESERVOIR TANK

9. BLEED POWER STEERING SYSTEM

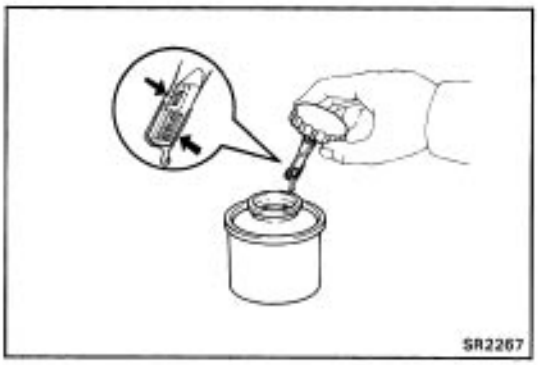

BLEEDING OF POWER STEERING SYSTEM

1. CHECK FLUID LEVEL IN RESERVOIR TANK

Check the fluid level and add fluid if necessary.

Fluid: ATF DEXRONO® II

HINT: Check that the fluid level is within the HOT LEVEL of the tank or dipstick. If the fluid is cold, check that it is within the COLD LEVEL of the tank or dipstick.

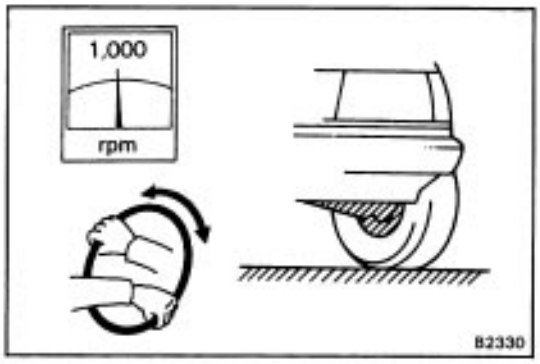

2. START ENGINE AND TURN STEERING WHEEL FROM LOCK TO LOCK THREE OR FOUR TIMES

With the engine speed below 1,000 rpm, turn the steering wheel to left or right full lock and keep it there for 2 – 3 seconds, then turn wheel to the reverse full lock and keep it there for 2 – 3 seconds.

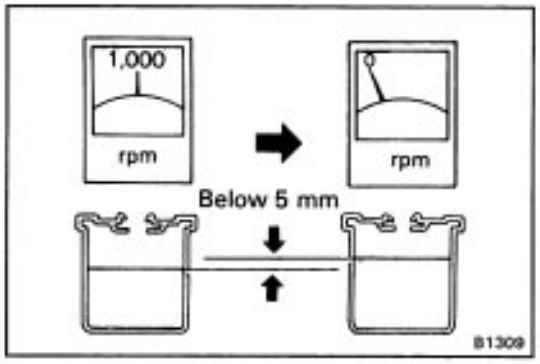

3. CHECK THAT FLUID IN RESERVOIR IS NOT FOAMY OR CLOUDY AND DOES NOT RISE OVER MAXIMUM WHEN ENGINE IS STOPPED

Measure the fluid level with the engine running. Stop the engine and measure the fluid level.

Maximum rise: 5 mm (0.20 in.)

If a problem is found, repeat steps 7 and 8 on page SR–35. Repair the PS if the problem persists.

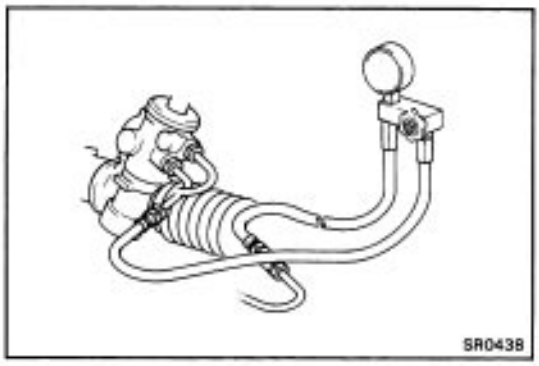

OIL PRESSURE CHECK

1. CONNECT PRESSURE GAUGE

(a) Disconnect the pressure line from the gear housing.
SST 09631–22020

(b) Connect the gauge side of the pressure gauge to the pressure line and the valve side to the gear housing.

(e) Bleed the system. Start the engine and turn the steering wheel from lock to lock two or three times.

(d) Check that the fluid level is correct.

2. CHECK THAT FLUID TEMPERATURE IS AT LEAST 80˚C (176˚F)

3. START ENGINE AND RUN IT AT IDLE

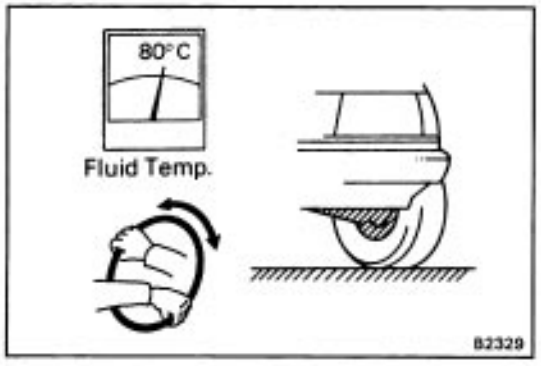

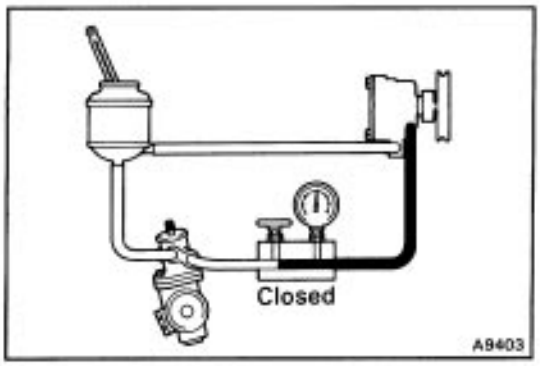

4. CHECK FLUID PRESSURE READING WITH VALVE CLOSED

Close the pressure gauge valve and observe the reading on the gauge.

Minimum pressure: 65 kg /cm2 (924 psi, 6,374 kPa)

NOTICE:

- Do not keep the valve closed for more than 10 seconds.
- Do not let the fluid temperature become too high.

If pressure is low, repair or replace the PS pump.

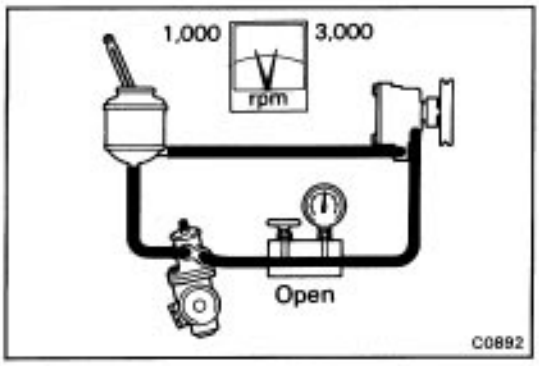

5. OPEN VALVE FULLY

6. CHECK AND RECORD PRESSURE READING AT 1,000 RPM

7. CHECK AND RECORD PRESSURE READING AT 3,000 RPM

Check that there is 5 kg/cm2 (71 psi, 490 kPa) or less difference in pressure between the 1,000 rpm and 3,000 rpm checks.

If the difference is excessive, repair or replace the flow control valve of the PS pump.

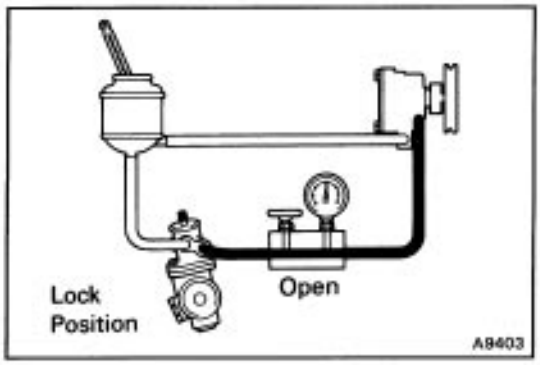

8. CHECK PRESSURE READING WITH STEERING WHEEL TURNED TO FULL LOCK

Be sure the pressure gauge valve is fully opened and the engine idling.

Minimum pressure: 65 kg /cm2 (924 psi, 6,374 kPa)

NOTICE:

- Do not maintain lock position for more than 10 seconds.
- Do not let the fluid temperature become too high.

If pressure is low, the gear housing has an internal leak and must be repaired or replaced.

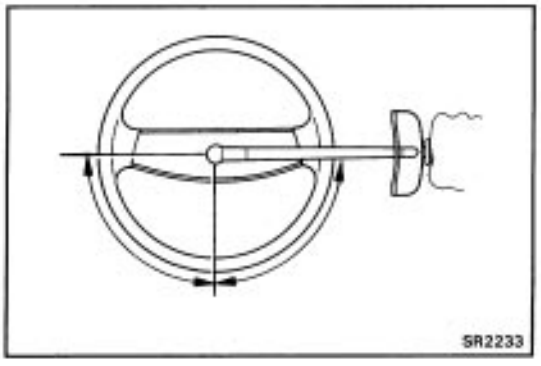

9. MEASURE STEERING EFFORT

Center the steering wheel and run the engine at idle.

Using a torque meter, measure the steering effort in both directions.

Maximum steering effort: 60 kg–cm (52 in.–lb, 5.9 N–m)

If steering effort is excessive, repair the power steering unit.

HINT: Be sure to consider the tire type, pressure and contact surface before making your diagnosis.

Power Steering Pump

REMOVAL AND INSTALLATION OF POWER STEERING PUMP

Remove and install the parts as shown.

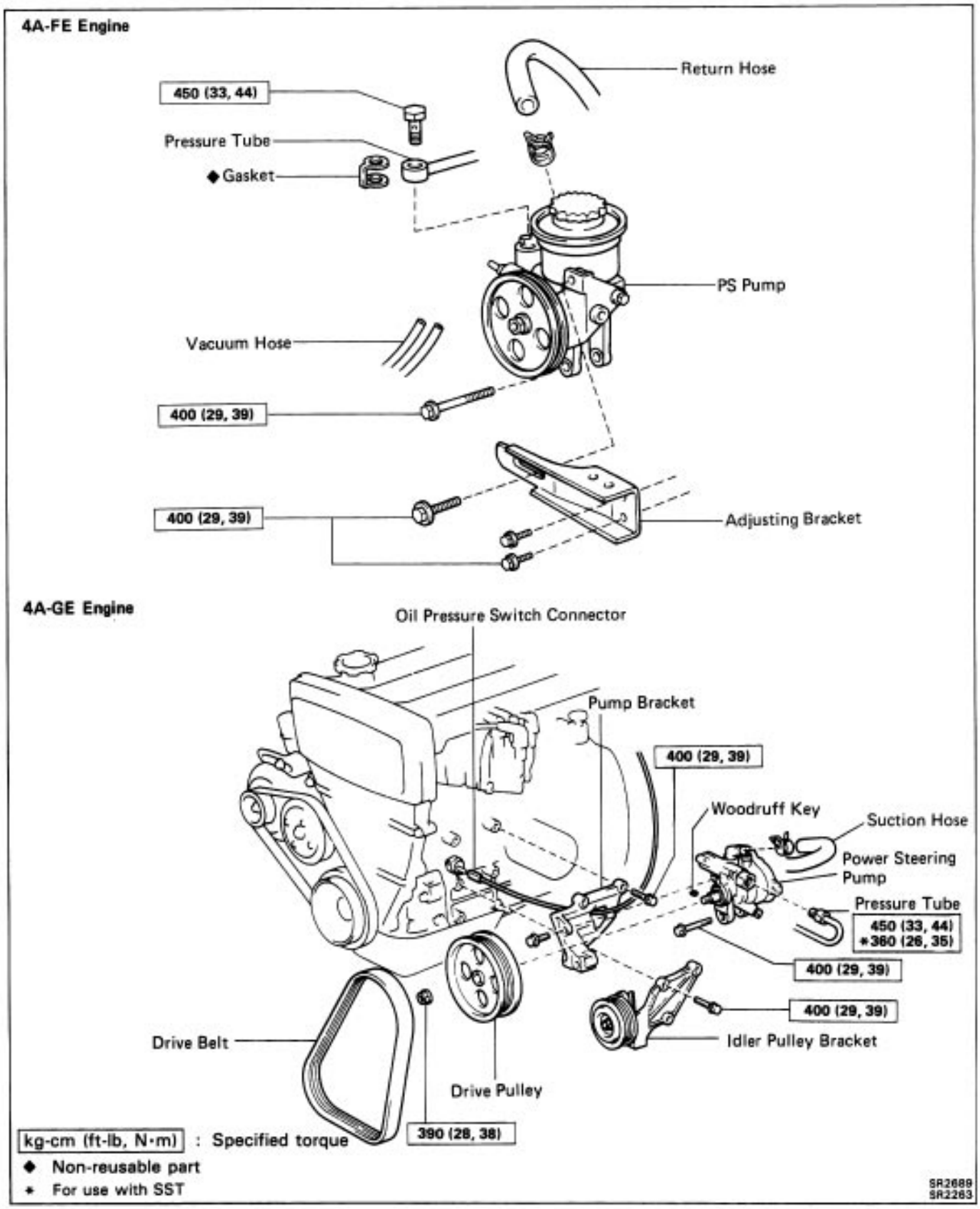

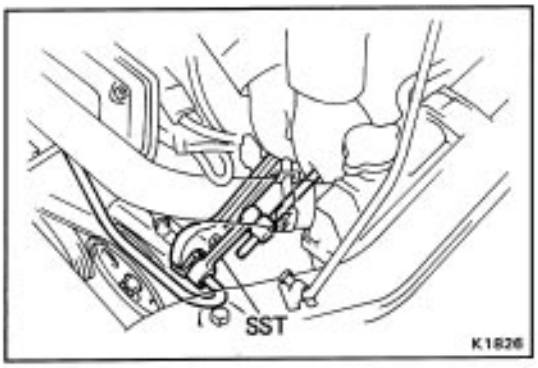

(MAIN POINTS OF REMOVAL AND INSTALLATION)

1. (4A–GE Engine)

DISCONNECT AND CONNECT PRESSURE TUBE

Using SST, disconnect and connect the pressure tube from/to the PS pump.

SST 09631–22020

Torque: 360 kg–cm (26 ft–lb, 35 N–m)

HINT: Use a torque wrench with a fulcrum length of 300 mm (11.81 in.).

2. ADJUST DRIVE BELT TENSION AFTER INSTALLING PS PUMP

(See page SR–33)

COMPONENTS

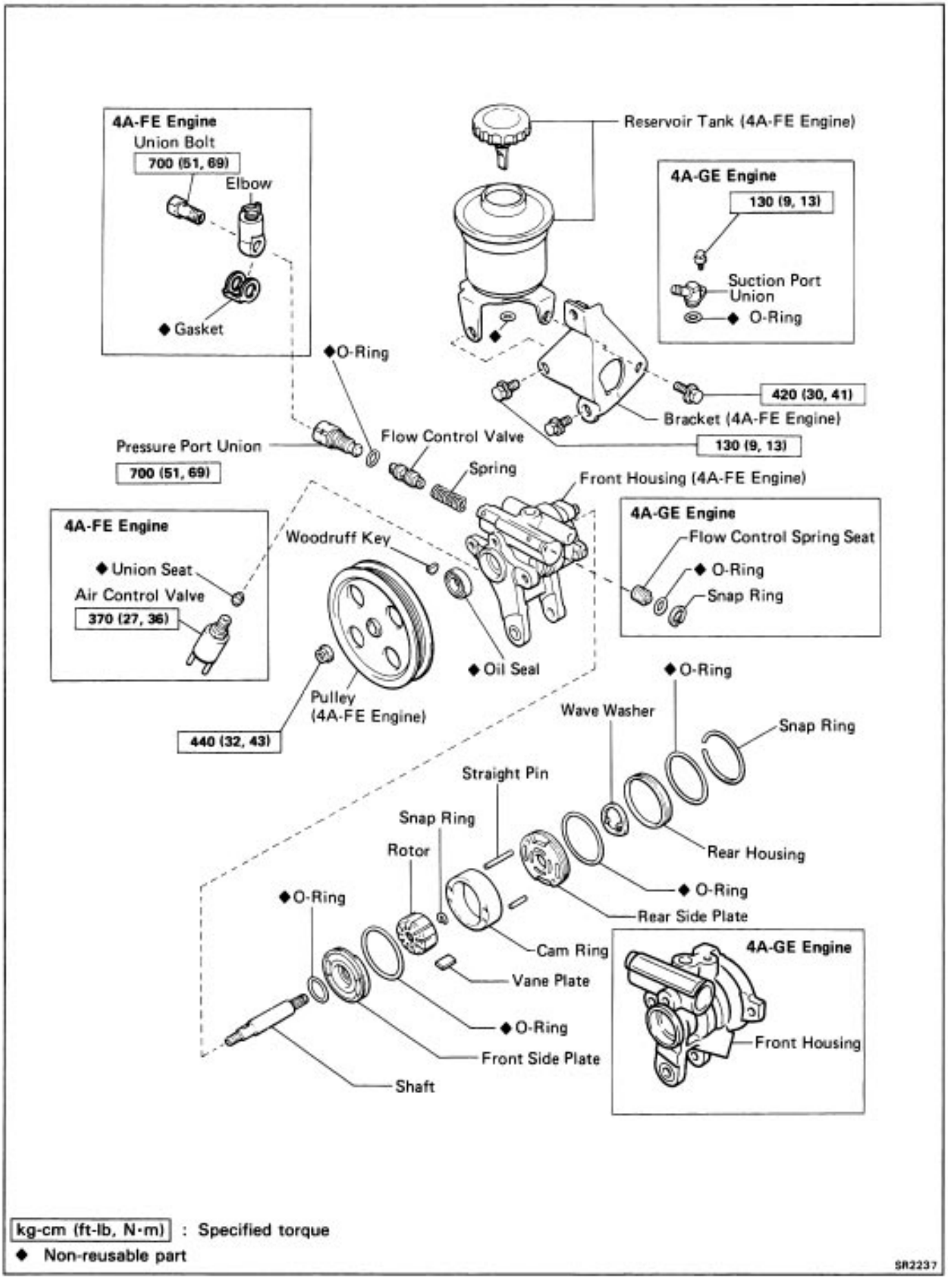
4A-FE Engine
Union Bolt
700 (51, 69)
Elbow
◆ Gasket
Reservoir Tank (4A-FE Engine)
4A-GE Engine
130 (9, 13)
Suction Port Union
◆ O-Ring
◆O-Ring
420 (30, 41)
Bracket (4A-FE Engine)
130 (9, 13)
Pressure Port Union
700 (51, 69)
Flow Control Valve
Spring
Front Housing (4A-FE Engine)
4A-FE Engine
◆ Union Seat
Air Control Valve
370 (27, 36)
Woodruff Key
4A-GE Engine
Flow Control Spring Seat
◆ O-Ring
Snap Ring
◆ Oil Seal
Pulley (4A-FE Engine)
440 (32, 43)
◆ O-Ring
Wave Washer
Snap Ring
Straight Pin
Snap Ring
Rotor
Rear Housing
◆ O-Ring
◆O-Ring
Rear Side Plate
Cam Ring
Vane Plate
◆ O-Ring
Front Side Plate
Shaft
4A-GE Engine
Front Housing
kg-cm (ft-lb, N·m) : Specified torque
◆ Non-reusable part
SR2237

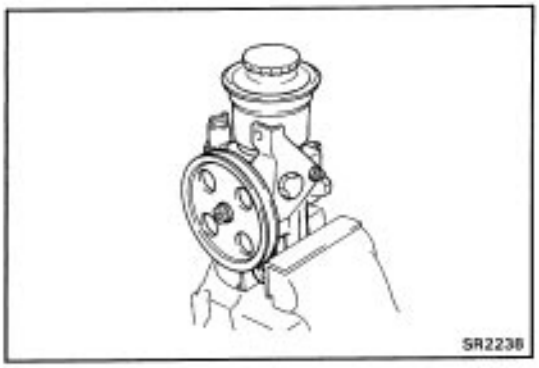

DISASSEMBLY OF POWER STEERING PUMP

1. MOUNT POWER STEERING PUMP IN VISE

NOTICE: Do not tighten the vise too tight.

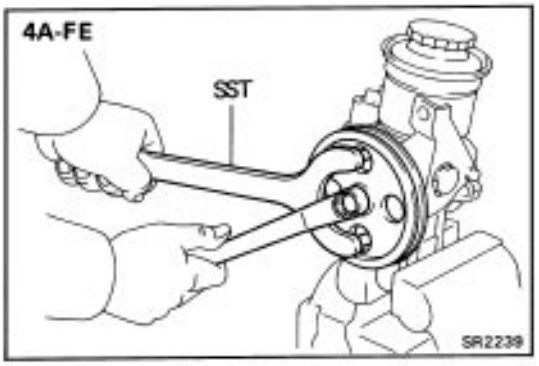

2. .(4A–FE Engine)

REMOVE DRIVE PULLEY

(a) Using SST to hold the pulley, remove the pulley set nut.

SST 09616–22010

(b) Remove the pulley and woodruff key.

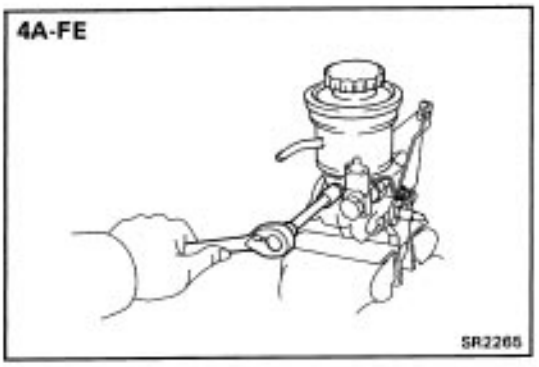

3. (4A–FE Engine)

REMOVE RESERVOIR TANK, BRACKET AND O–RING

(a) Remove the three bolts and bracket.

(b) Remove the bolt, reservoir tank and 0–ring.

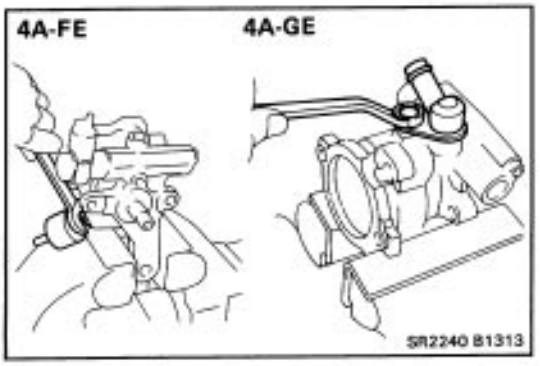

4. (4A–FE Engine)

REMOVE AIR CONTROL VALVE

(a) Remove the air control valve.

(b) Remove the union seat.

5. (4A–GE Engine)

REMOVE SUCTION PORT UNION AND O–RING

Remove the set bolt, suction port union and 0–ring.

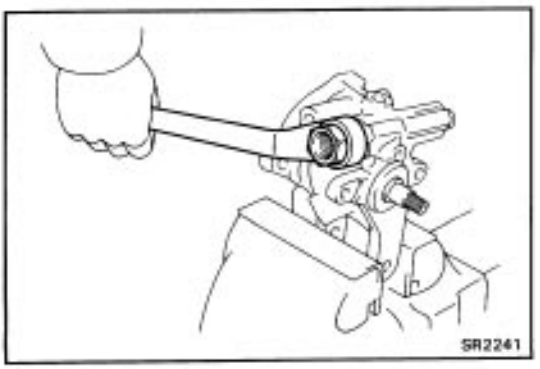

6. REMOVE FLOW CONTROL VALVE

(a) (4A–FE Engine)

Remove the union bolt, gasket and elbow.

(b) Remove the pressure port union.

(c) Remove the O–ring from the union.

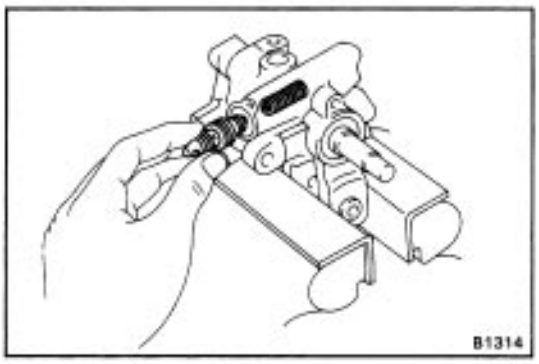

(c) Remove the flow control valve and spring.

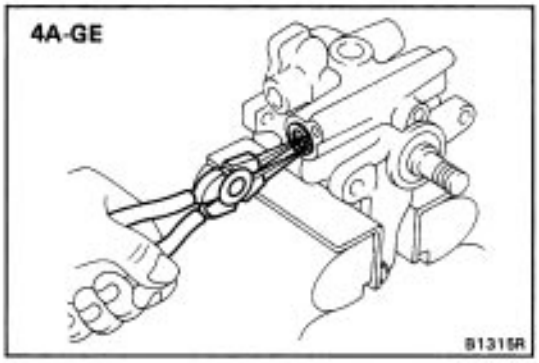

7. (4A–GE Engine)

REMOVE FLOW CONTROL SPRING SEAT

(a) Using snap ring pliers, remove the snap ring.

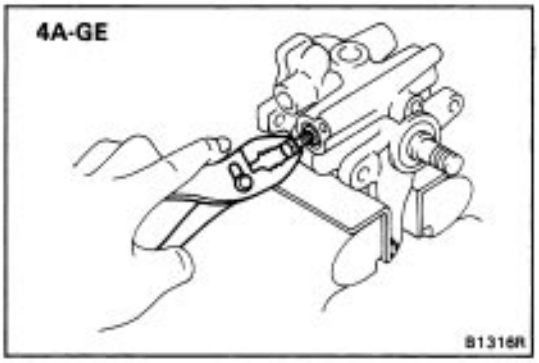

(b) Temporarily install a 10–mm bolt to the seat and pull out the seat.

(c) Remove the O–ring from the seat.

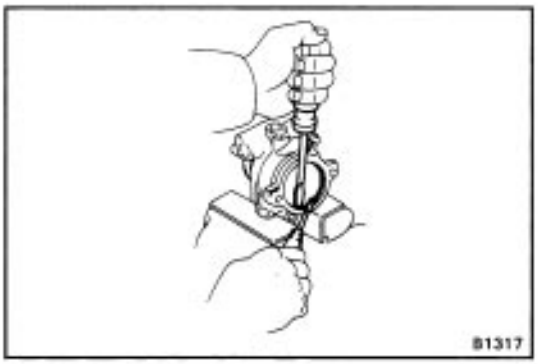

8. REMOVE REAR HOUSING

(a) Using two screwdrivers, remove the snap ring.

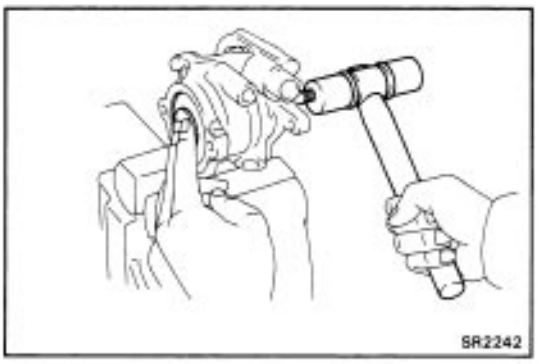

(b) Using a plastic hammer, tap out the rear housing and wave washer.

(c) Remove the O–ring from the rear housing.

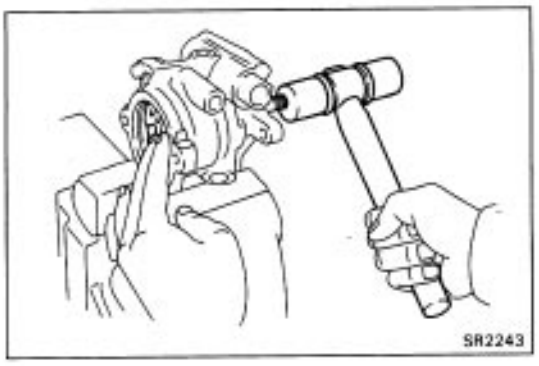

9. REMOVE REAR SIDE PLATE

(a) Using a plastic hammer, tap the shaft end and remove the rear plate.

(b) Remove the 0–ring from the rear plate.

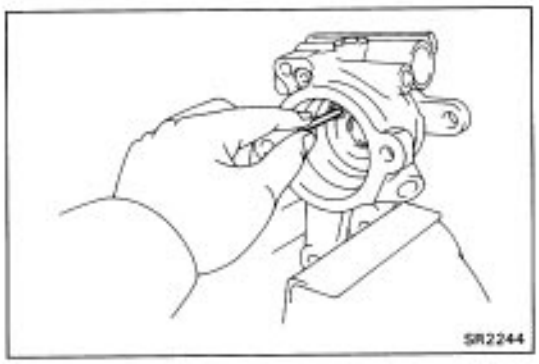

10. REMOVE VANE PUMP SHAFT, CAM RING AND VANE PLATES

(a) Remove the pump shaft with cam ring, vane. plates from the front housing.

(b) Remove the cam ring and ten vane plates from the pump shaft.

(c) Remove the longer straight pin from the front housing.

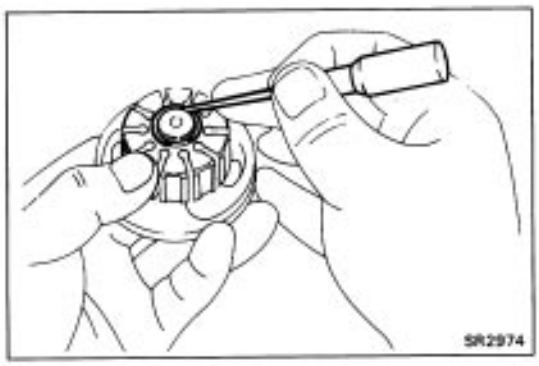

11. REMOVE ROTOR AND FRONT SIDE PLATE

(a) Using a screwdriver, remove the snap ring.

(b) Remove the rotor and front plate from the pump shaft.

(c) Remove the two 0–rings from the front plate.

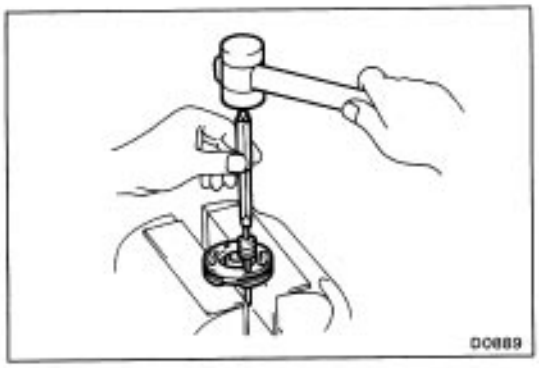

(d) Using a pin punch and hammer, drive out the straight pin.

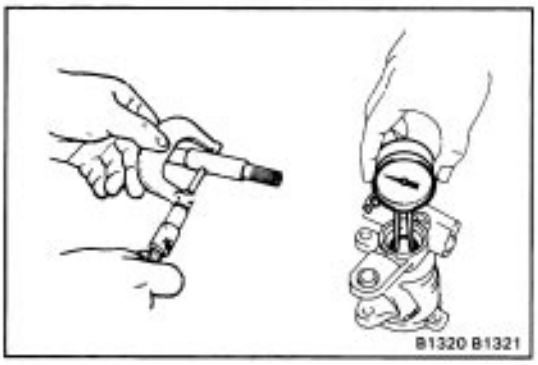

INSPECTION OF POWER STEERING PUMP

1. MEASURE OIL CLEARANCE OF SHAFT AND BUSHING

Using a micrometer and calipers, measure the oil clearance.

Standard clearance: 0.01–0.03 mm (0.0004–0.0012 in.)

Maximum clearance: 0.07 mm (0.0028 in.)

If more than maximum, replace the entire power steering pump.

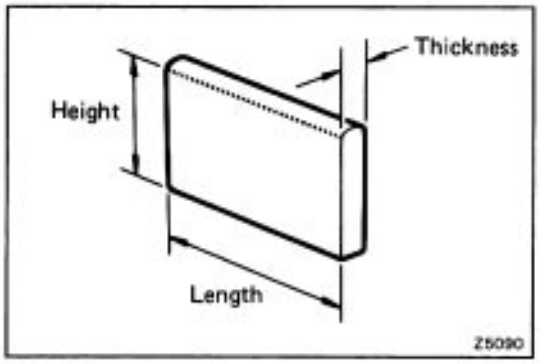

2. INSPECT ROTOR AND VANE PLATES

(a) Using a micrometer, measure the height, thickness and length of the vane plates.

Minimum height: 8.00 mm (0.3150 in.)

Minimum thickness: 1.77 mm (0.0697 in.)

Minimum length: 14.97 mm (0.5894 in.)

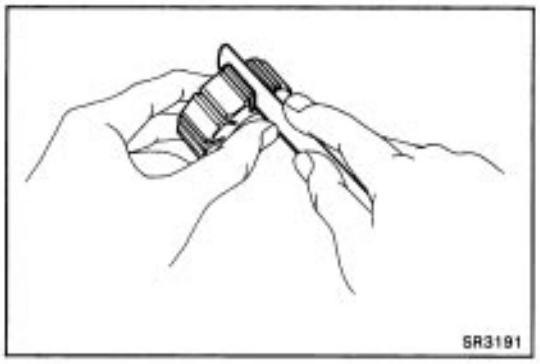

(b) Using a feeler gauge, measure the clearance between the rotor groove and vane plate.

Maximum clearance: 0.03 mm (0.0012 in.)

If more than maximum, replace the pump plate and/or rotor with one having the same mark stamped on the cam ring.

Inscribed mark: 1,2,3,4 or None

HINT: There are five vane lengths with the following rotor and cam ring marks:

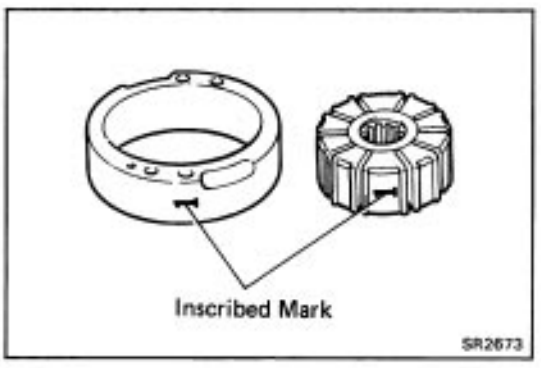

Rotor and cam ring mark	Vane length mm (in.)
None	14.996 – 14.998 (0.5904 – 0.5905)
1	14.994 – 14.996 (0.5903 – 0.5904)
2	14.992 – 14.994 (0.5902 – 0.5903)
3	14.990 – 14.992 (0.59016 – 0.59024)
4	14.988 – 14.990 (0.5901 – 0.5902)

3. INSPECT FLOW CONTROL VALVE

(a) Coat the valve with power steering fluid and check that it falls smoothly into the valve hole by its own weight.

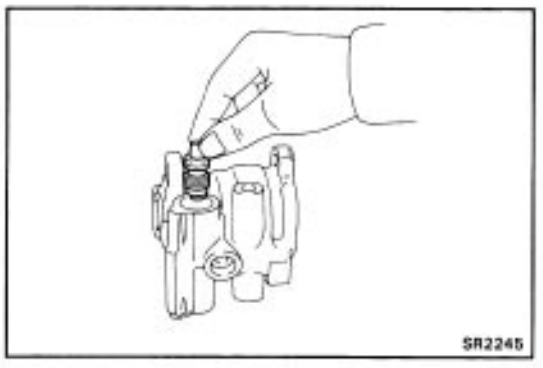

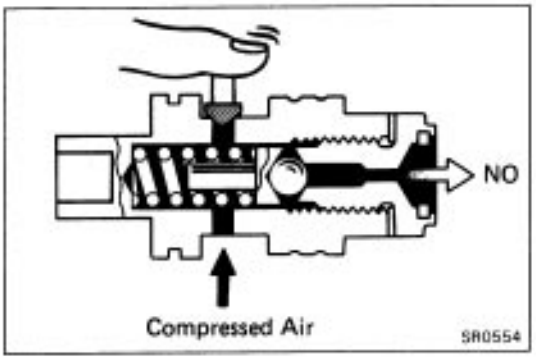

(b) Check the flow control valve for leakage.
Close one of the holes and apply compressed air [4– 5 kg/cm2 (57–71 psi, 392–490 kPa)] into the opposite side, and confirm that air does not come out from the end hole.

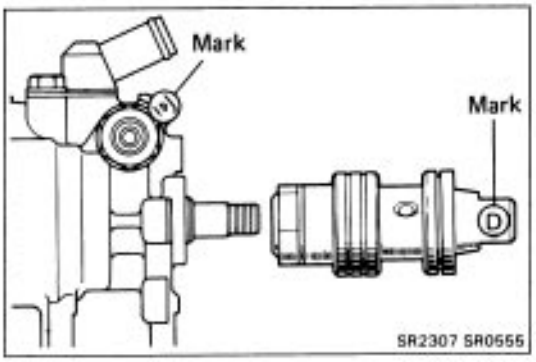

If necessary, replace the valve with one having the same letter as inscribed on the front housing.
Inscribed mark: A,B,C,D,E or F

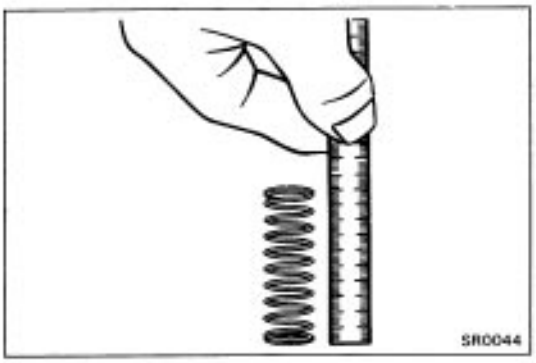

4. INSPECT FLOW CONTROL SPRING

Using a scale, measure the free length of the spring.
Spring length: 36–38 mm (1.42–1.49 in.)
If not within specification, replace the spring.

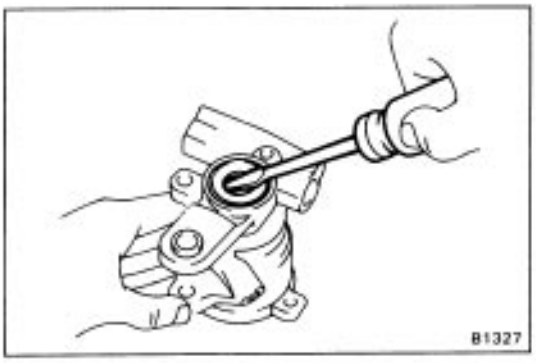

5. IF NECESSARY, REPLACE OIL SEAL

(a) Using a screwdriver, pry out the seal.

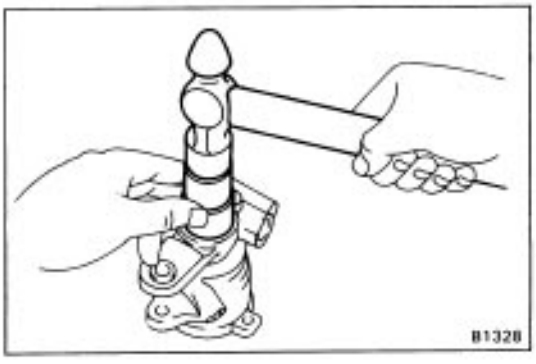

(b) Using a socket wrench and hammer, drive in a new oil seal.

ASSEMBLY OF POWER STEERING PUMP

(See page SR–40)

1. COAT ALL SLIDING SURFACES WITH POWER STEERING FLUID BEFORE ASSEMBLY

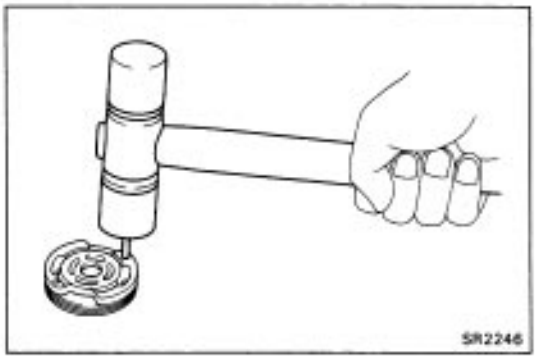

2. INSTALL FRONT SIDE PLATE AND ROTOR TO PUMP SHAFT

(a) Install the shorter straight pin to the front plate.

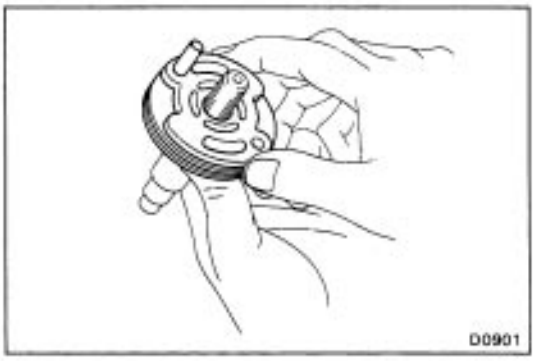

(b) Install two new 4–rings to the front plate.
(c) Install the front plate to the pump shaft.

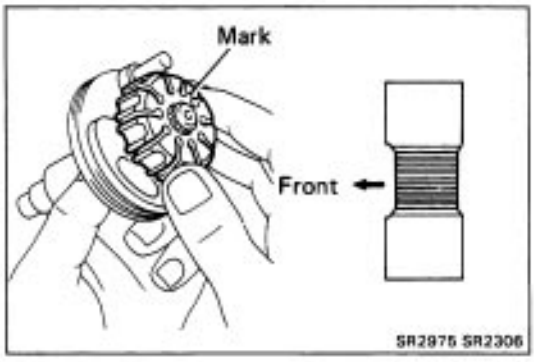

(d) Install the rotor to the pump shaft.
(e) Install the snap ring.

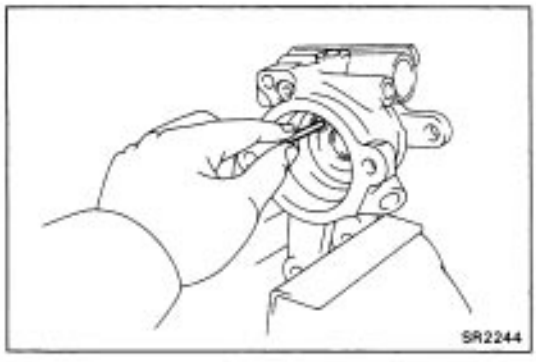

3. INSTALL PS PUMP SHAFT TO FRONT HOUSING

(a) Coat the oil seal lip with MP grease.
(b) Install the longer straight pin to the front housing.

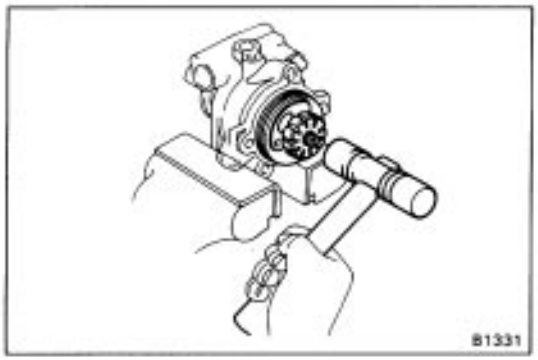

(c) Align the hole of the front plate and straight pin and tap in the pump shaft with a plastic hammer.
NOTICE: Be careful not to damage the oil seal and O–rings.

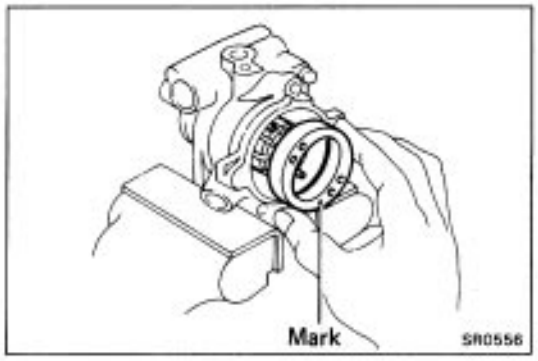

4. INSTALL CAM RING

Align the holes of the cam ring and straight pins, and insert the cam ring with the inscribed mark facing outward.

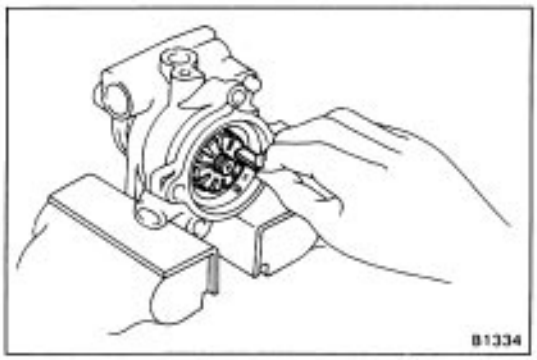

5. INSTALL VANE PLATES

Install the vane plates with the round end facing outward.

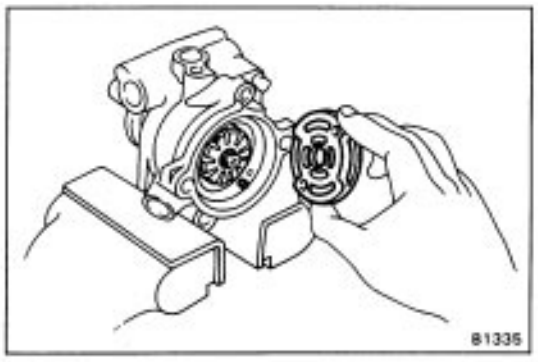

6. INSTALL REAR SIDE PLATE AND O–RING

(a) Install a new O–ring to the side plate.
(b) Align the holes of the side plate with the pins, and install the plate.

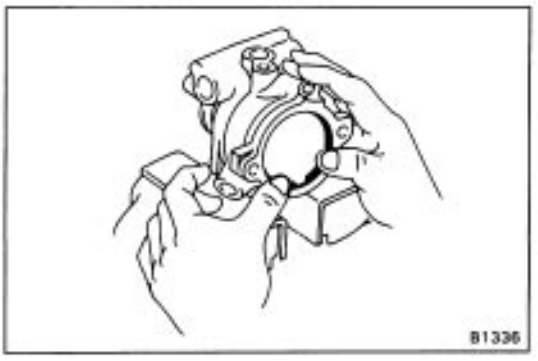

7. INSTALL REAR HOUSING

(a) Install the wave washer.
(b) Install a new 0–ring to the rear housing:
(c) Using a plastic hammer, tap in the rear housing.
(d) Install the snap ring.

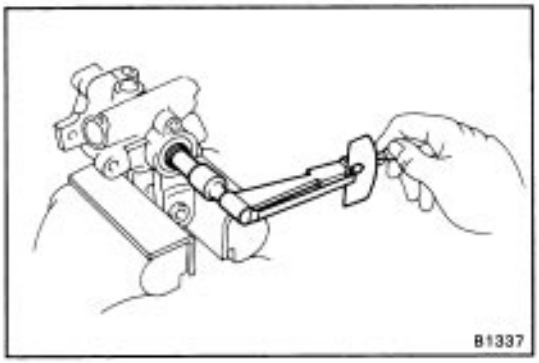

8. MEASURE PUMP SHAFT PRELOAD

(a) Check that the shaft rotates smoothly without abnormal noise.

(b) Temporarily install the pulley nut and check the rotating torque.

Rotating torque: 2.8 kg–cm (2.4 in.–lb, 0.3 N–m) or less

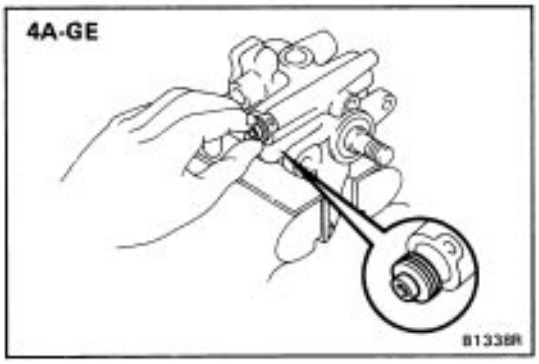

9. (4A–GE Engine)

INSTALL FLOW CONTROL SPRING SEAT

(a) Install a new O–ring in the spring seat.

(b) Insert the spring seat with the bolt hole facing outward to the housing.

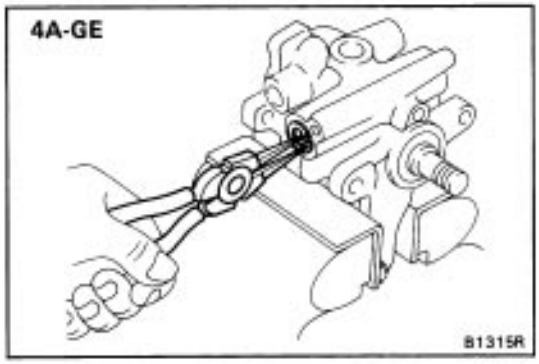

(c) Using snap ring pliers, install the snap ring.

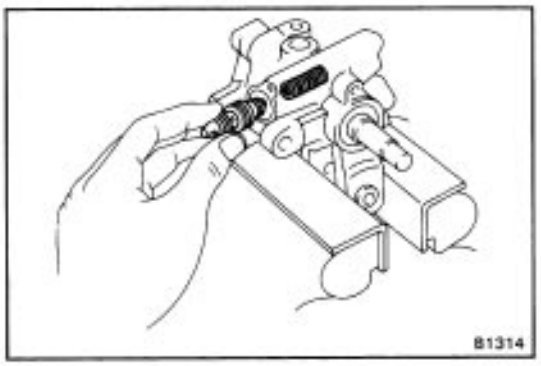

10. INSTALL SPRING, FLOW CONTROL VALVE, O–RING AND PRESSURE PORT UNION

(a) Install the spring and the valve into the housing.

(b) Install a new 0–ring in the groove of the pressure port union.

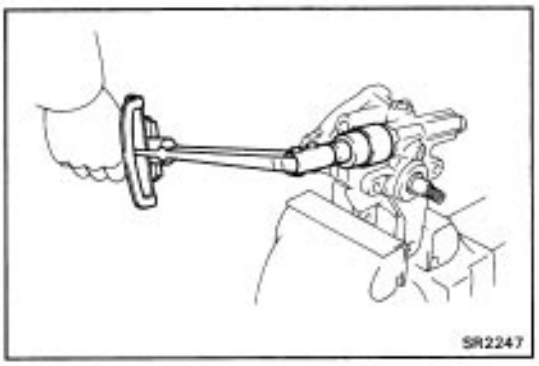

(c) Install and torque the pressure port union.

Torque: 700 kg–cm (51 ft–lb, 69 N–m)

(d) (4A–FE Engine)

Install the elbow, new gasket and union bolt.

Torque: 700 kg–cm (51 ft–lb, 69 N–m)

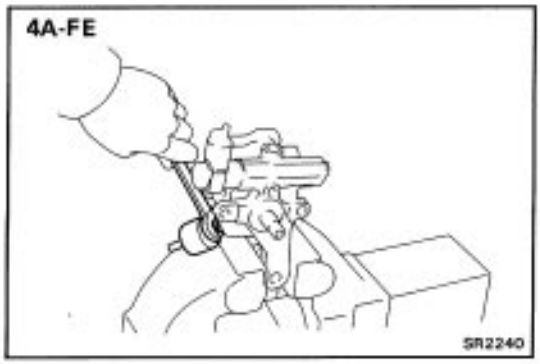

11. (4A–FE Engine)

INSTALL AIR CONTROL VALVE

Install a new union seat and tighten the valve.

Torque: 370 kg–cm (27 ft–lb, 36 N–m)

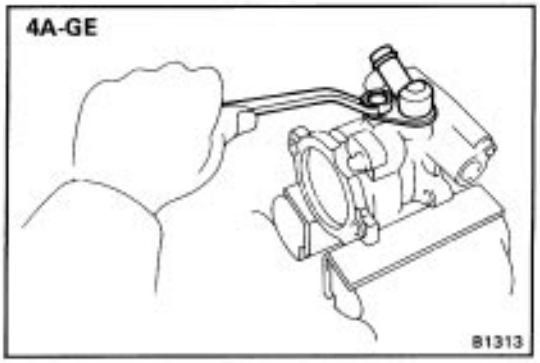

12. (4A–GE Engine)

INSTALL SUCTION PORT UNION

(a) Install a new O–ring to the suction port union.

(b) Install the suction port union into the housing.

(c) Install and torque the bolt.

Torque: 130 kg–cm (9 ft–lb, 13 N–m)

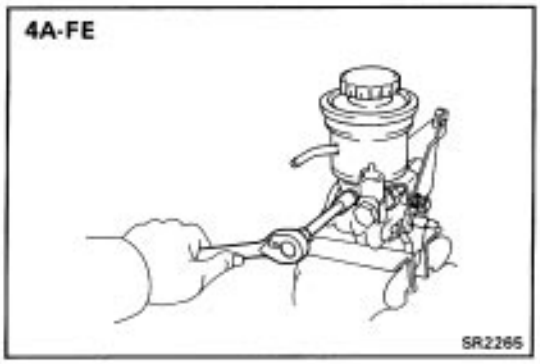

13. (4A–FE Engine)

INSTALL RESERVOIR TANK AND BRACKET

(a) Install a new O–ring to the reservoir tank.

(b) Install the reservoir tank and bracket and torque the bolts.

Torque:

12 mm head bolt 130 kg–cm (9 ft–lb, 13 N–m)

14 mm head bolt 420 kg–cm (30 ft–lb, 41 N–m)

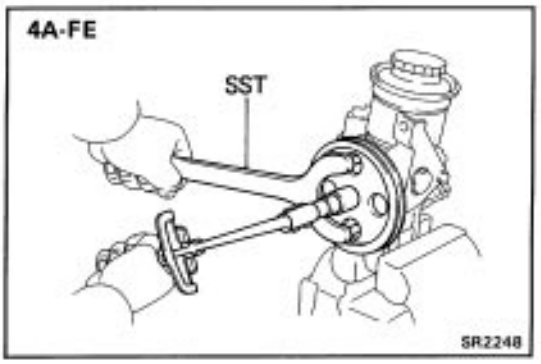

14. (4A–FE Engine)

INSTALL DRIVE PULLEY

(a) Install the woodruff key to the shaft.

(b) Install the pulley and nut to the shaft.

icy Using SST to hold the pulley, torque the nut.

SST 09616–22010

Torque: 440 kg–cm (32 ft–lb, 43 N–m)

Gear Housing

REMOVAL AND INSTALLATION OF GEAR HOUSING (2WD)

Remove and install the parts as shown.

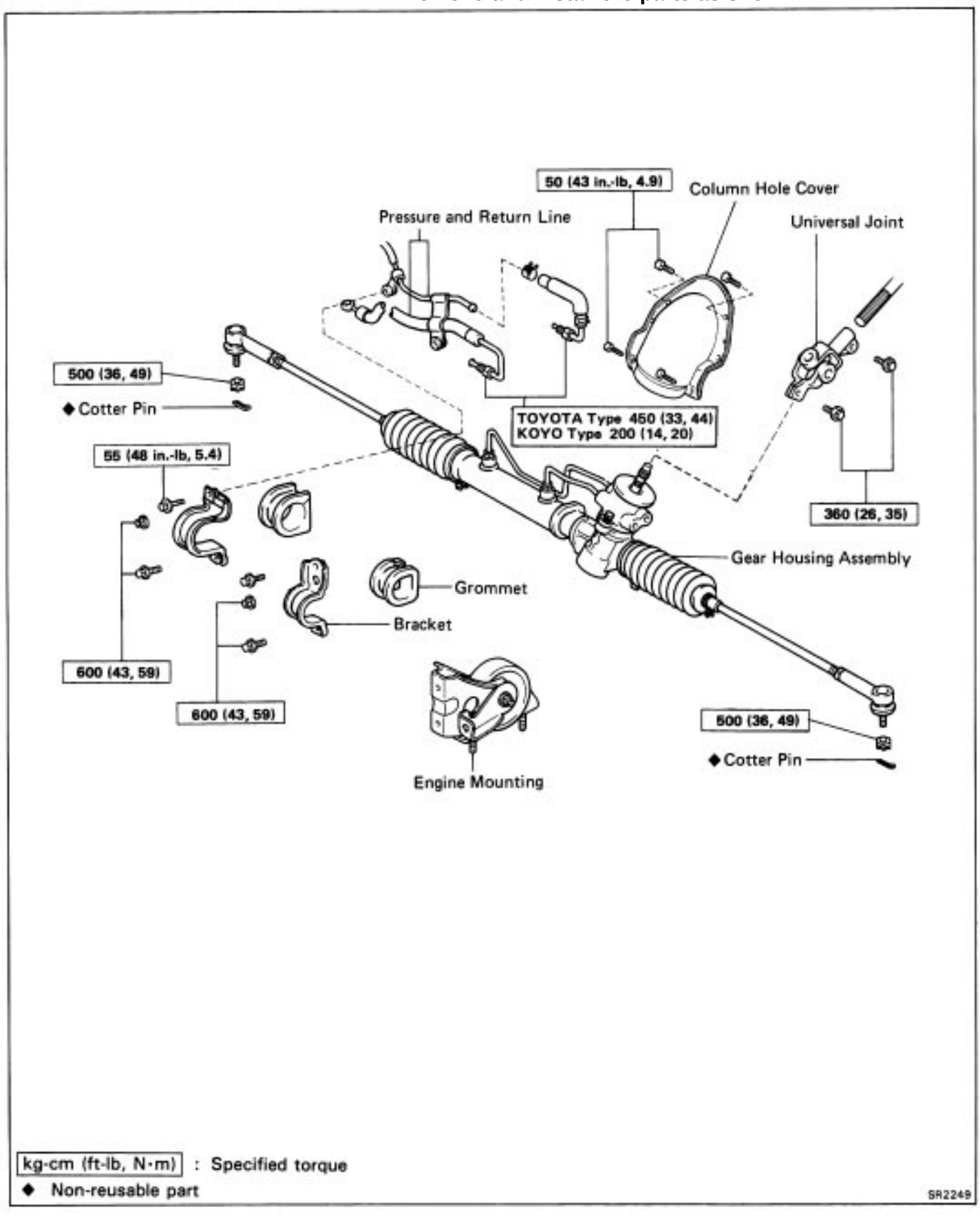

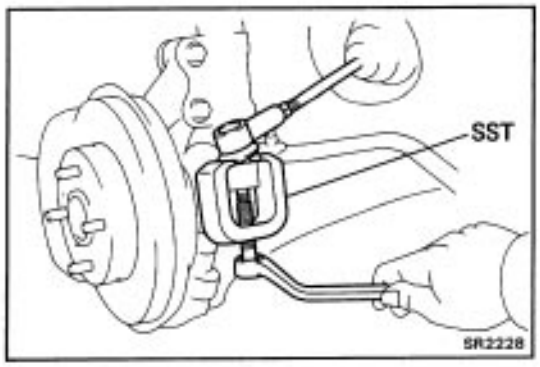

(MAIN POINTS OF REMOVAL AND INSTALLATION)

1. DISCONNECT TIE ROD END

(a) Remove the cotter pin and nut.,

(b) Using SST, disconnect the tie rod end from the knuckle arm.
SST 09610–55012

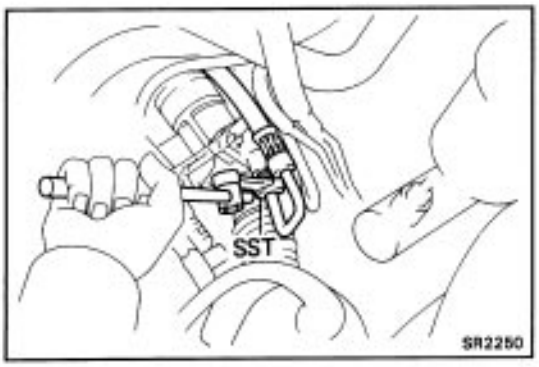

2. DISCONNECT AND CONNECT PRESSURE AND RETURN TUBES

Using SST, disconnect and connect the pressure and return tubes from/to the gear housing.
SST 09631–22020
Torque: 450 kg–cm (33 ft–lb, 44 N–m)

3. CHECK TOE–IN AFTER INSTALLING GEAR HOUSING

REMOVAL AND INSTALLATION OF GEAR HOUSING (4WD)

Remove and install the parts as shown.

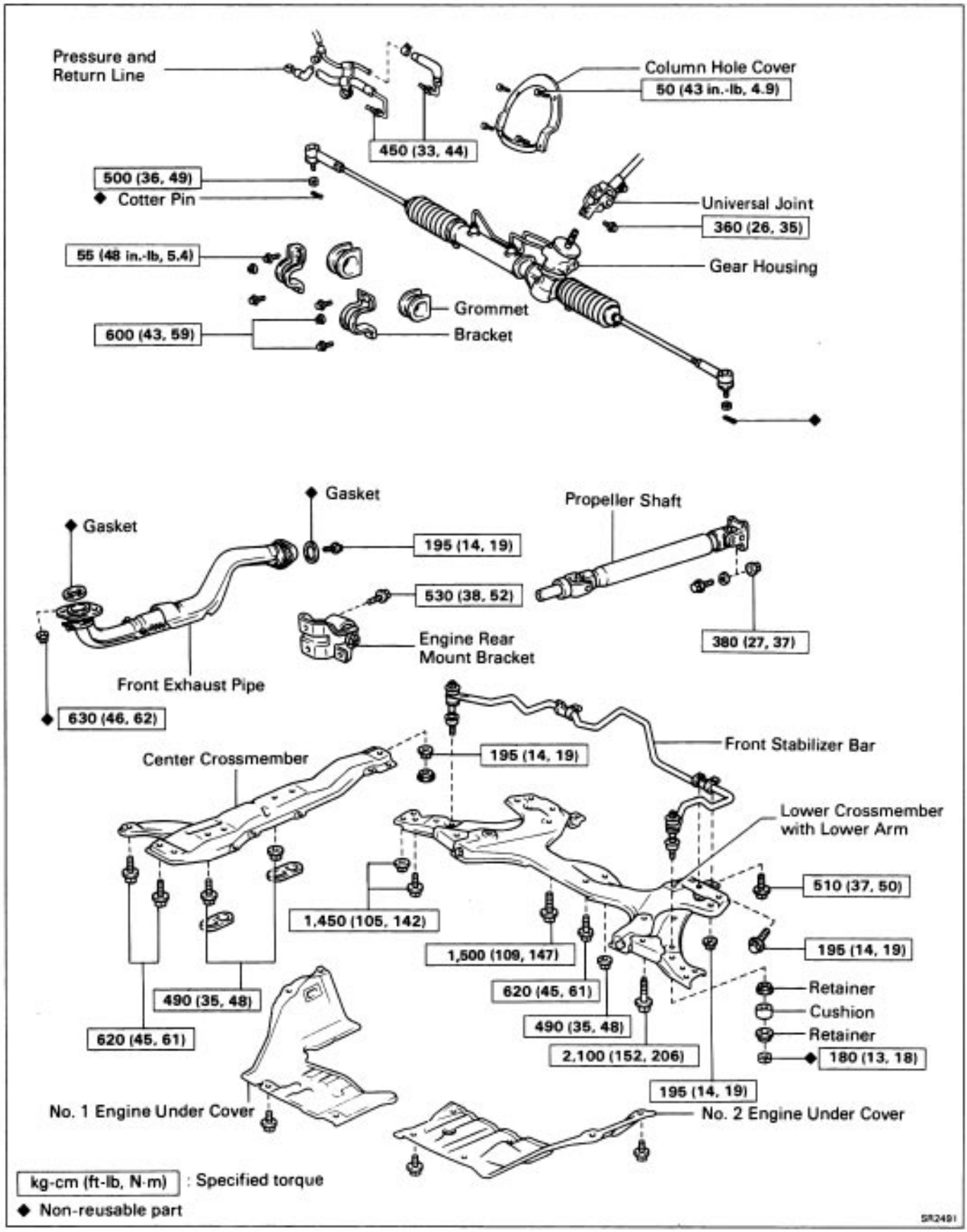

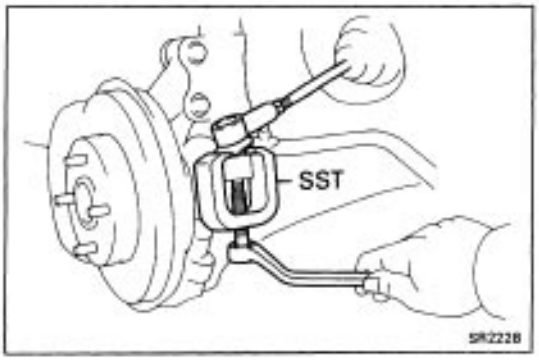

(MAIN POINTS OF REMOVAL AND INSTALLATION)

1. DISCONNECT TIE ROD ENDS

(a) Remove the cotter pins and nuts.

(b) Using SST, disconnect the tie rod ends from the knuckle arms.
SST 09610–55012

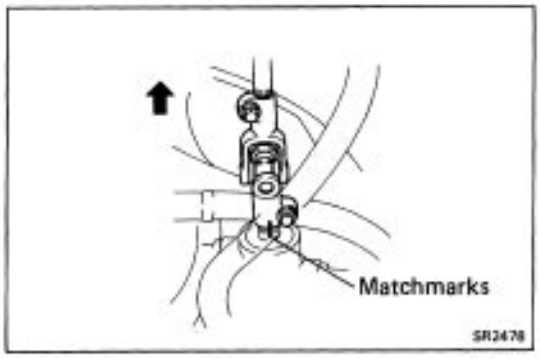

2. DISCONNECT UNIVERSAL JOINT

(a) Place matchmarks on the universal joint and control valve shaft.

(b) Loosen the upper side of universal joint set bolt.

(c) Remove the lower side of universal joint set bolt.

(d) Pull the universal joint upward from the control valve shaft.

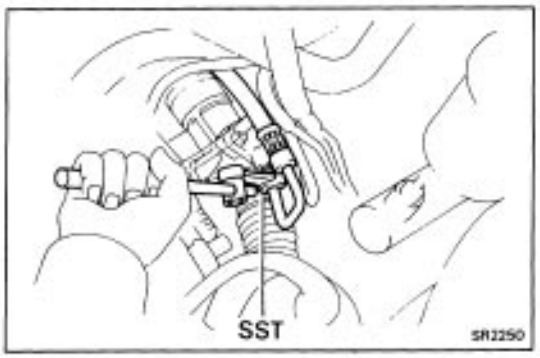

3. DISCONNECT AND CONNECT PRESSURE AND RETURN LINE

(a) Using SST, disconnect and connect the pressure and return line.
SST 09631–22020

Torque: 450 kg–cm (33 ft–lb, 44 N–m)

(b) Remove two bolts from the bracket.

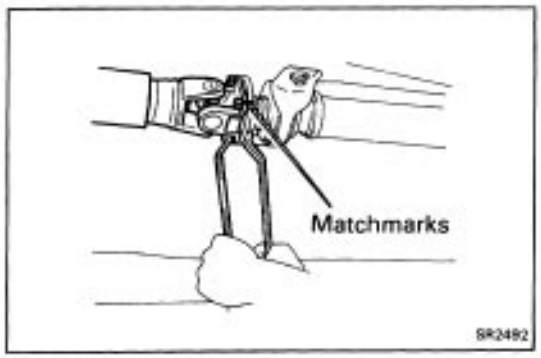

4. REMOVE PROPELLER SHAFT

(a) Place matchmarks to the propeller shaft flange and intermediate shaft flange.

(b) Remove the four bolts and nuts.

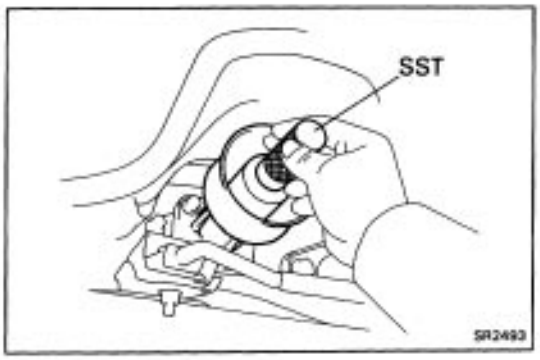

(c) Pull out the propeller shaft and insert SST.
SST 09325–20010

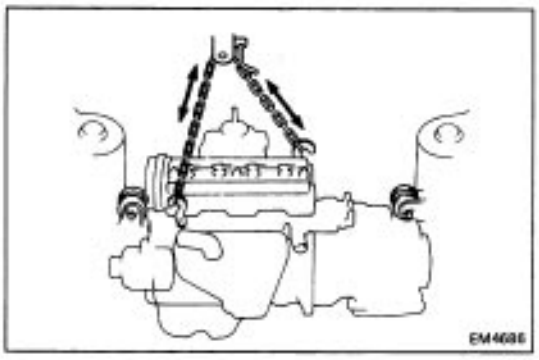

5. SUPPORT ENGINE

Before remove the lower crossmember, attach the engine hoist chain to the engine hangers to support the engine.

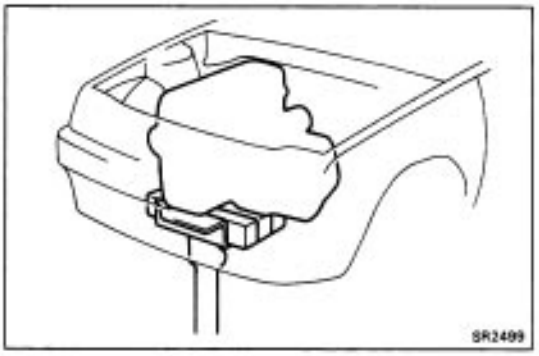

6. REMOVE GEAR HOUSING

(a) Jack up the front of the engine.

NOTICE: Do not overtilt the engine.

(b) Remove the two bolts, two nuts and the two bracket.

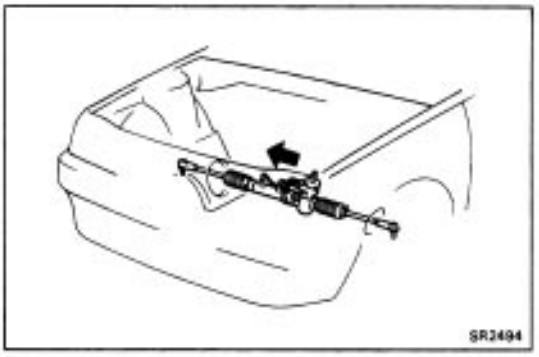

(c) Slide the gear housing to the RH side to put the LH tie rod end in the body panel.

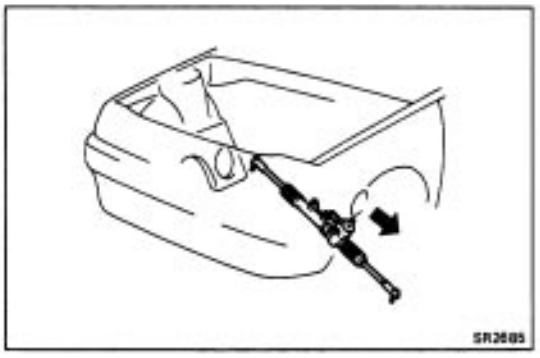

(d) Pull the gear housing out through the opening in the LH lower side of vehicle body.

NOTICE: Do not damage the turn pressure tube.

(e) Remove two grommets from the gear housing.

COMPONENTS (KOYO Type)

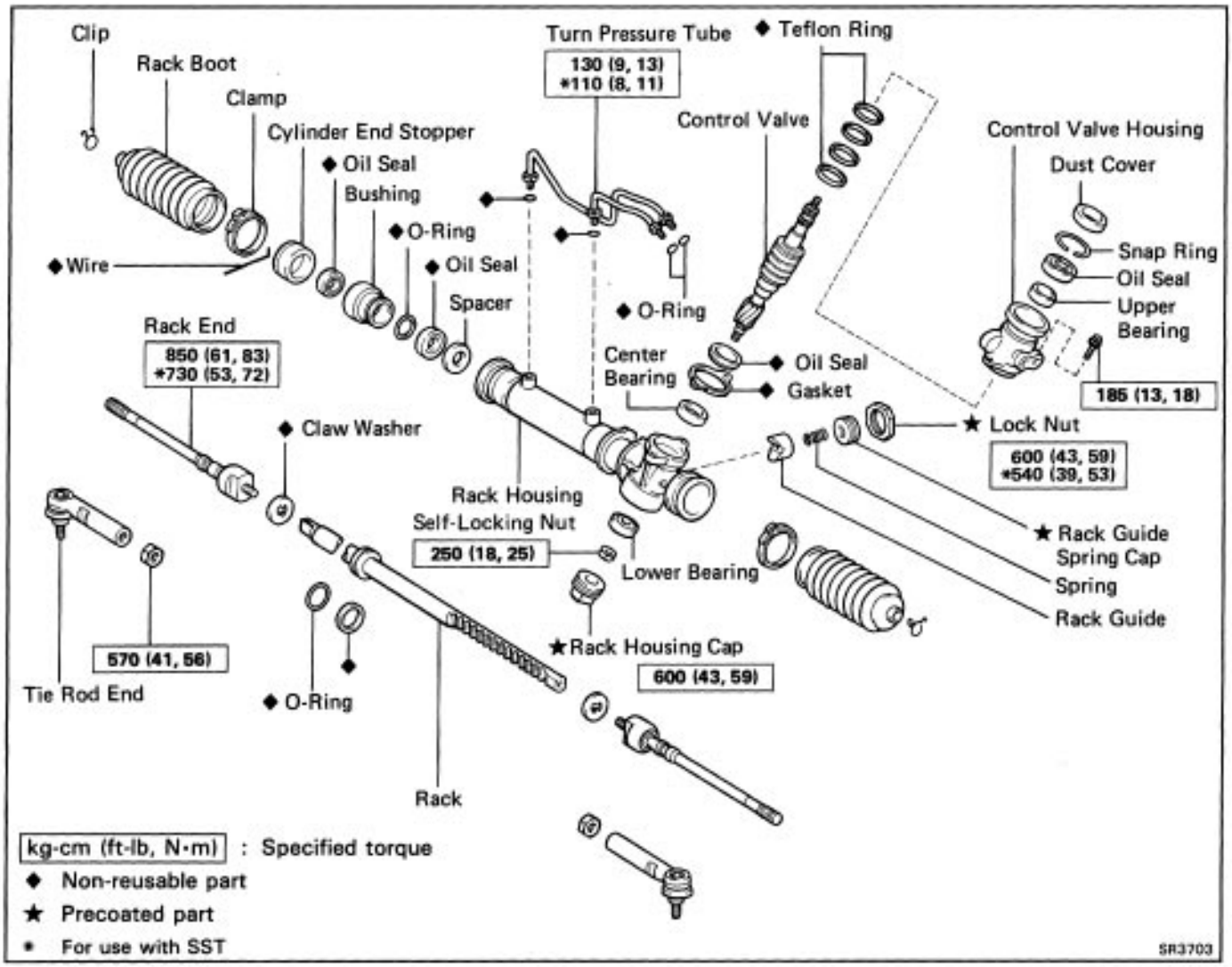

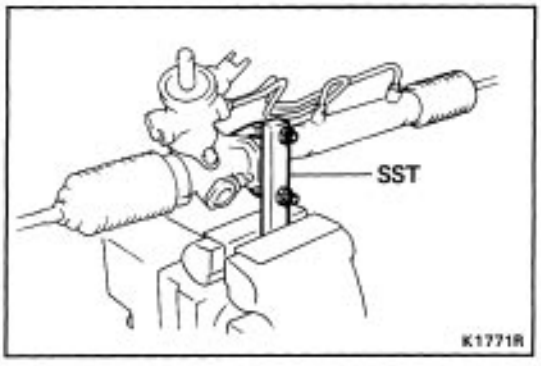

DISASSEMBLY OF STEERING GEAR HOUSING

1. CLAMP GEAR HOUSING IN VISE

Using SST, secure the steering gear in a vise.
SST 09612–00012

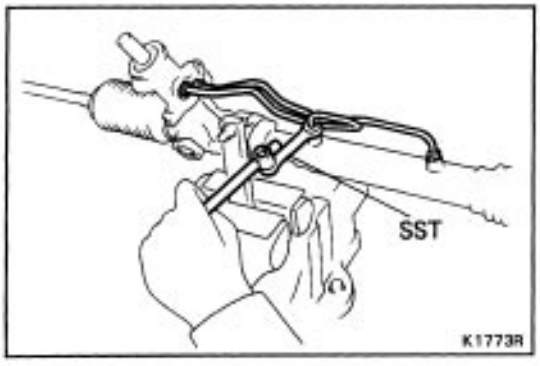

2. REMOVE RIGHT AND LEFT TURN PRESSURE TUBES

Using SST, remove the pressure tubes.
SST 09633–00020

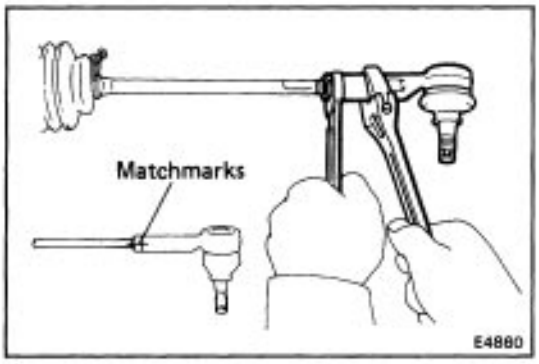

3. REMOVE TIE ROD ENDS

(a) Loosen the lock nut and place matchmarks on the tie rod end and rack end.

(b) Remove the tie rod ends and lock nuts.

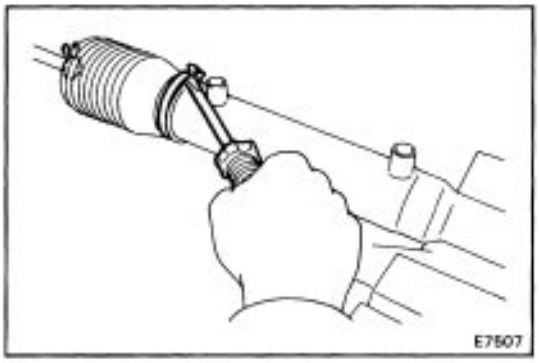

4. REMOVE RACK BOOTS

(a) Using a screwdriver, remove the clips and clamps.

(b) Remove the rack boots.

NOTICE: Be careful not to damage the rack boots and rack housing.

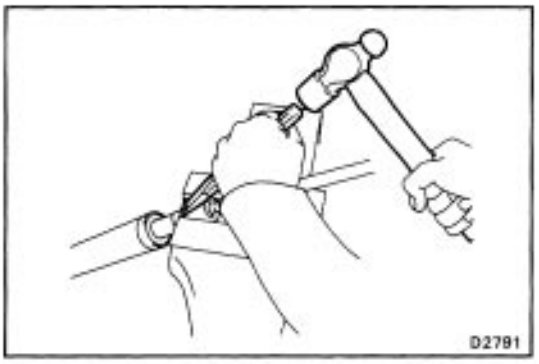

5. REMOVE RACK ENDS AND CLAW WASHERS

(a) Unstake the claw washers.

NOTICE: Avoid any impact to the rack.

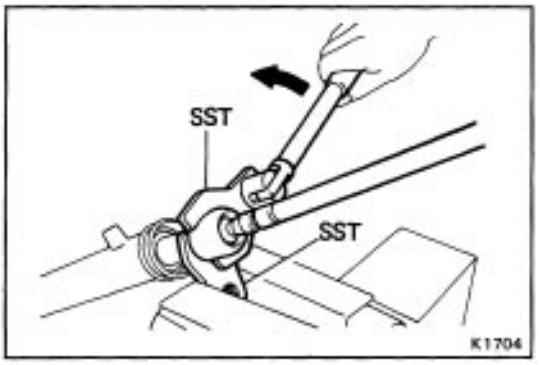

(b) Using SST, remove the rack ends.
SST 09612–10093 (09628–10020)
09612–24014 (09617–24011)

(c) Mark the left and right rack ends accordingly.

(d) Remove the claw washers.

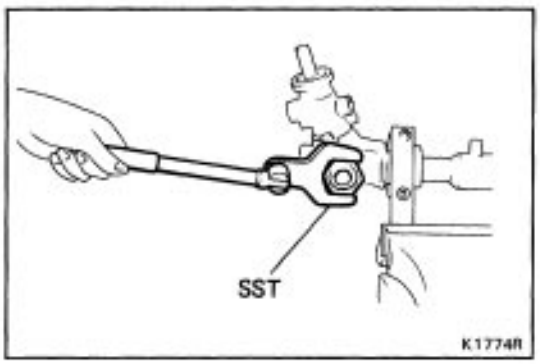

6. REMOVE RACK GUIDE SPRING CAP LOCK NUT

Using SST, remove the rack guide spring cap lock nut.
SST 09617–12030

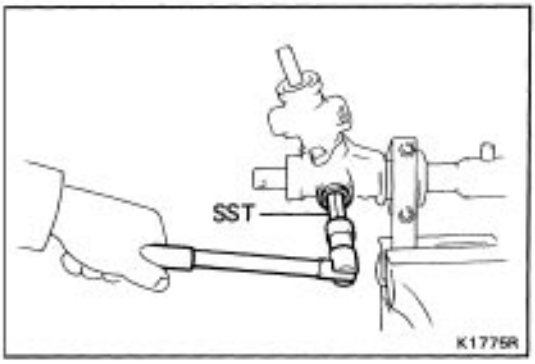

7. REMOVE RACK GUIDE SPRING CAP

Using SST, remove the rack guide spring cap.

SST 09612–10131

8. REMOVE RACK GUIDE SPRING AND RACK GUIDE

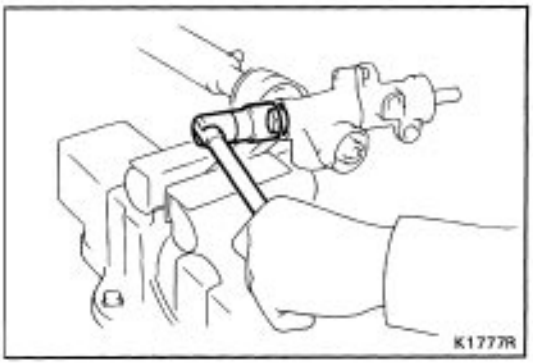

9. REMOVE RACK HOUSING CAP

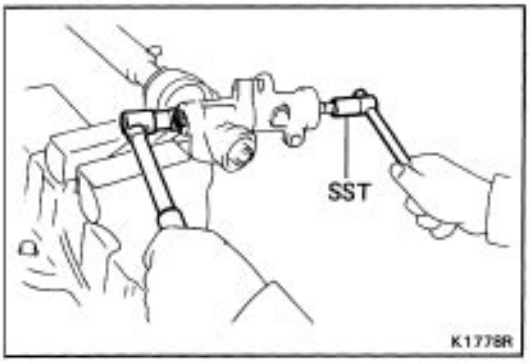

10. REMOVE SELF–LOCKING NUT

Using SST to hold the control valve, remove the self–locking nut.

SST 09616–00010

11. REMOVE DUST COVER

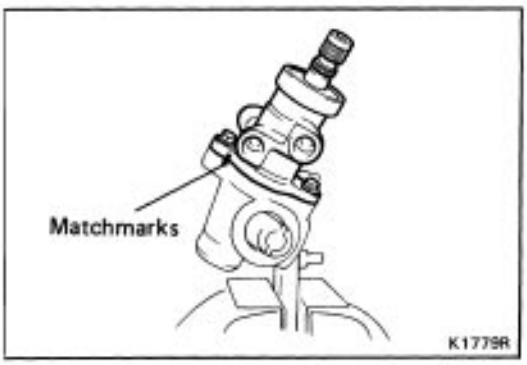

12. REMOVE CONTROL VALVE HOUSING

(a) Place matchmarks on the valve housing and rack housing.

(b) Remove the two bolts.

(c) Pull out the valve with the valve housing.

(d) Remove the gasket from the rack housing.

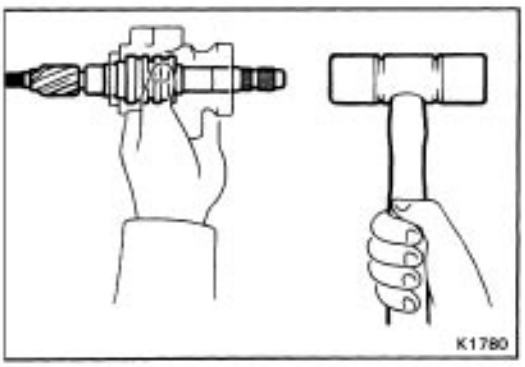

13. REMOVE CONTROL VALVE FROM HOUSING

(a) Tap out the control valve with the oil seal.

(b) Remove the oil seal from the control valve.

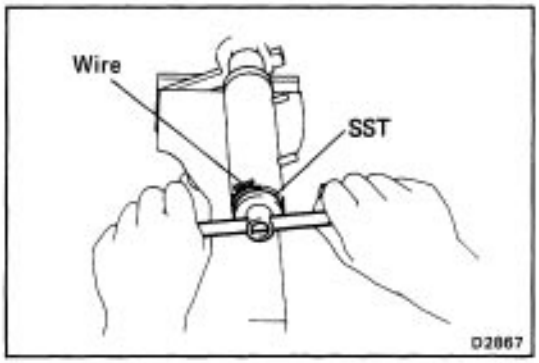

14. REMOVE CYLINDER END STOPPER

(a) Using SST, turn the cylinder end stopper clockwise until the wire end comes out.
SST 09631–10021

(b) Using SST, turn the cylinder end stopper counter-clockwise, and remove the wire.
SST 09631–10021

(c) Pull out the cylinder end stopper.

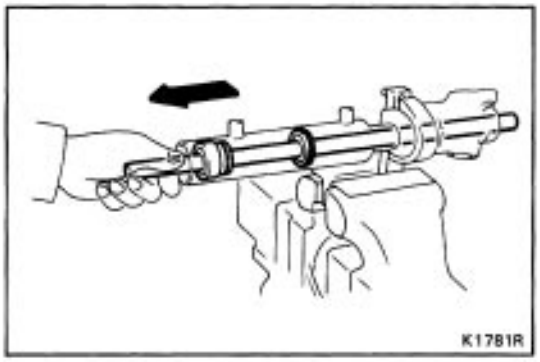

15. REMOVE RACK BUSHING AND RACK

(a) Remove the rack with the rack bushing.

(b) Remove the bushing from the rack.

(c) Remove the O–ring from the bushing.

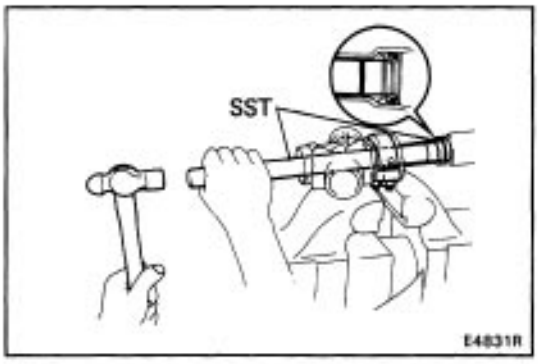

16. REMOVE CYLINDER HOUSING OIL SEAL AND SPACER

Using SST, drive out the spacer and oil seal.
SST 09631–12020 and 09631–12031

NOTICE: Do not damage the rack housing.

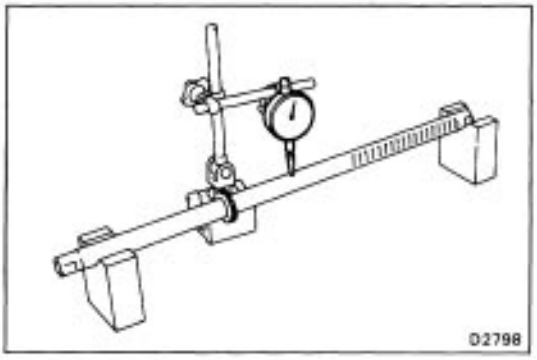

INSPECTION AND REPAIR OF GEAR HOUSING COMPONENTS

1. INSPECT RACK

(a) Check the rack for runout and for tooth wear or damage.

(b) Check the back surface for wear or damage.

If faulty, replace it.

Maximum runout: 0.3 mm (0.012 in.)

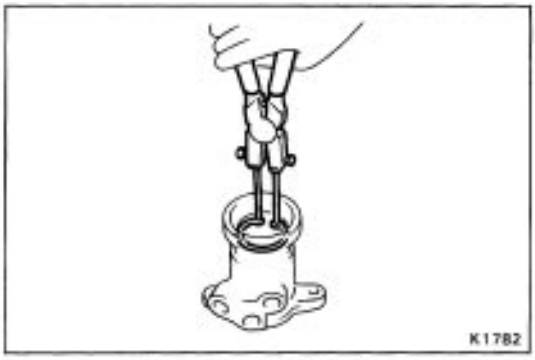

2. IF NECESSARY, REPLACE CONTROL VALVE HOUSING OIL SEAL AND UPPER BEARING

(a) Using snap ring pliers, remove the snap ring.

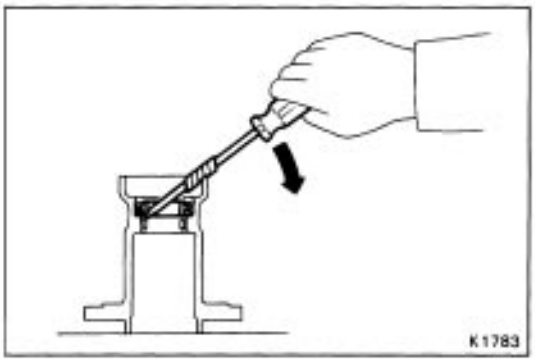

(b) Using a screwdriver, pry out the oil seal.

NOTICE: Be careful not to damage the control valve housing.

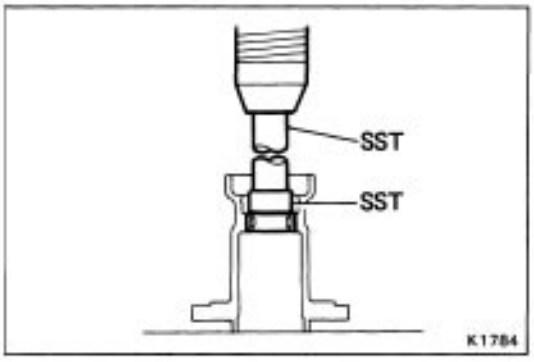

(c) Using SST, press out the upper bearing.

SST 09630–24013 (09620–24010)
09620–30010 (09631–00020)

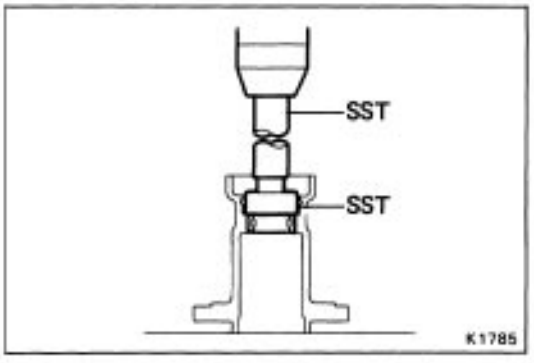

(d) Using SST, press in a new upper bearing as shown.

SST 09630–24013 (09620–24020)
09620–30010 (09631–00020)

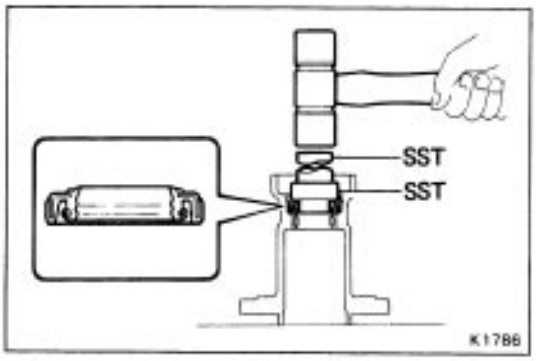

(e) Using SST and plastic hammer, tap in a new oil seal.
SST 09620–30010 (09631–00020)
09630–24013 (09620–24020)
(f) Coat the oil seal lip with power steering fluid.
(g) Using snap ring pliers, install the snap ring.

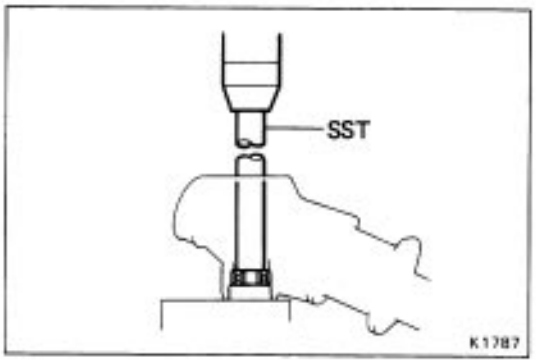

3. IF NECESSARY, REPLACE CONTROL VALVE LOWER BEARING AND CENTER BEARING

(a) Using SST, press out the lower bearing.
SST 09620–30010 (09631–00020)

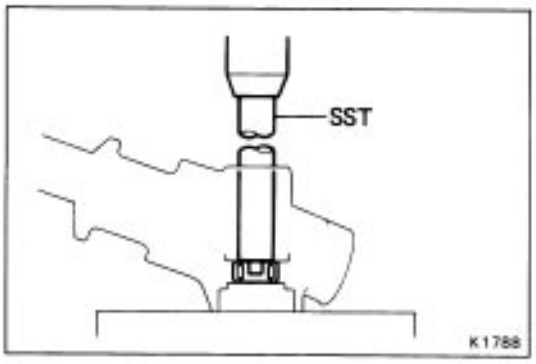

(b) Using SST, press out the center bearing.
SST 09631–12020

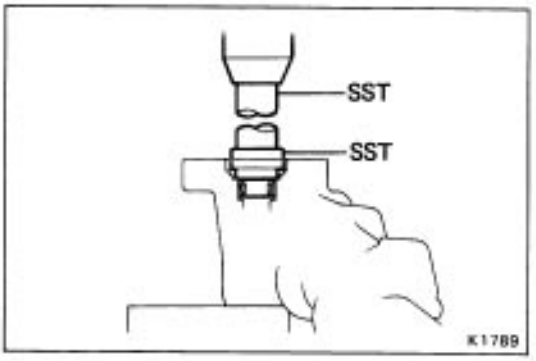

(c) Using SST, press in a new center bearing as shown.
SST 09630–24013 (09620–24020)
09631–12020

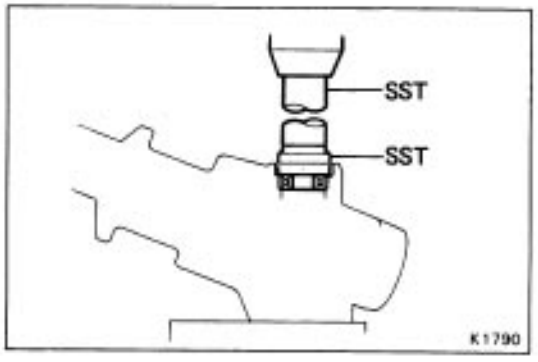

(d) Using SST, press in a new lower bearing.
SST 09620–30010 (09631–00020)
09631–20031

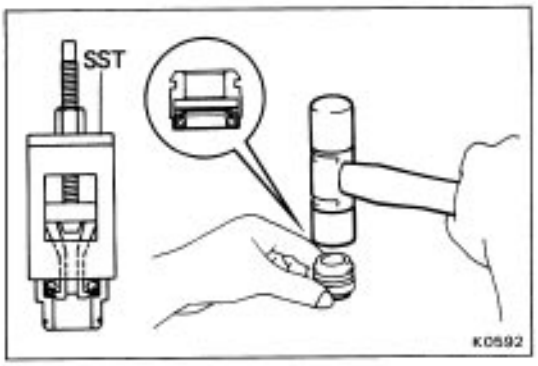

4. IF NECESSARY, REPLACE RACK BUSHING OIL SEAL

(a) Using SST, remove the oil seal.
SST 09612–24014 (09613–22011)

(b) Coat a new oil seal with the power steering fluid.

(c) Using a plastic hammer, tap in a new oil seal as shown.

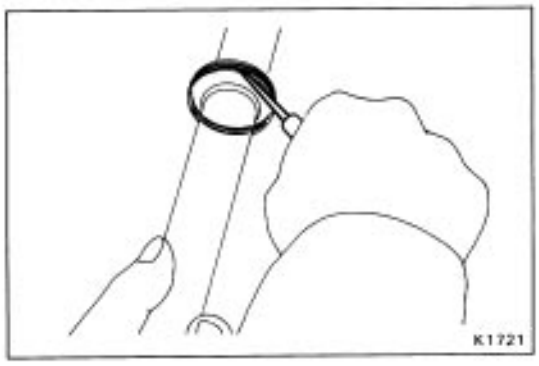

5. IF NECESSARY, REPLACE TEFLON RING AND O–RING

(a) Remove the teflon ring and 0–ring.

NOTICE: Be careful not to damage the steering rack.

(b) Coat the O–ring with power steering fluid and install it.

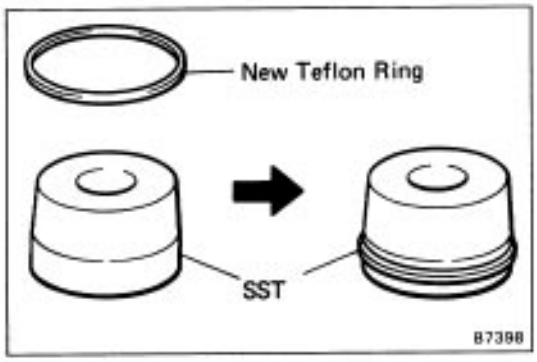

(c) Coat a new teflon ring with power steering fluid.

(d) Install the teflon ring to SST and expand.
SST 09630–24013 (09631–24020)

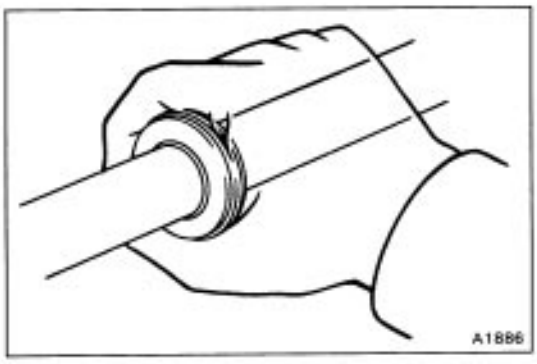

(e) Install the expanded teflon ring to the steering rack and snug it down with your fingers.

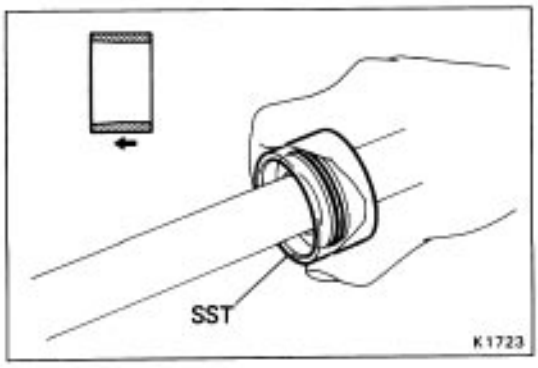

(f) Coat the teflon ring with power steering fluid, and carefully slide the tapered end of SST over the teflon ring to seat the ring.
SST 09630–24013 (09631–24030)

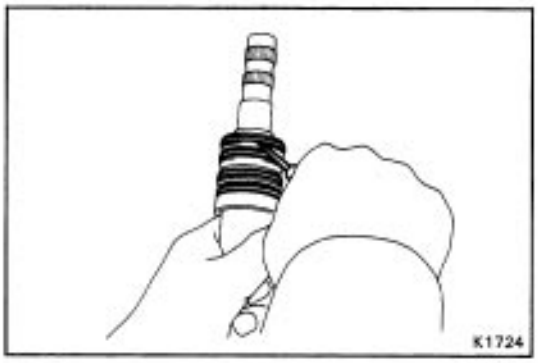

6. IF NECESSARY, REPLACE CONTROL VALVE TEFLON RINGS

(a) Using a screwdriver, remove the teflon rings.

NOTICE: Be careful not to damage the control valve.

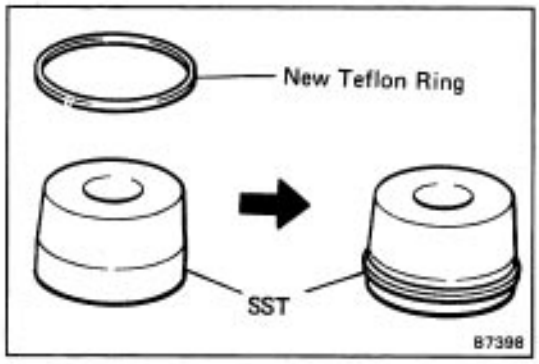

(b) Install new teflon rings to SST and expand them.
SST 09631–20070

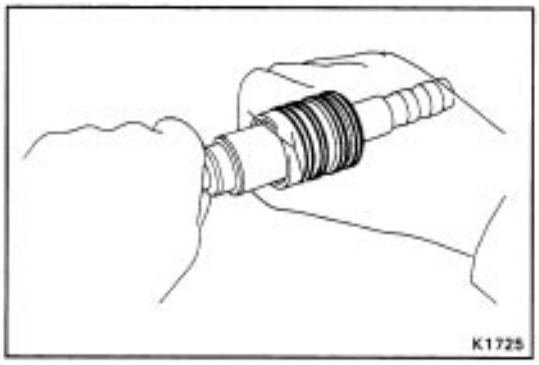

(c) Install the expanded teflon rings to the control valve and snug them down with your fingers.

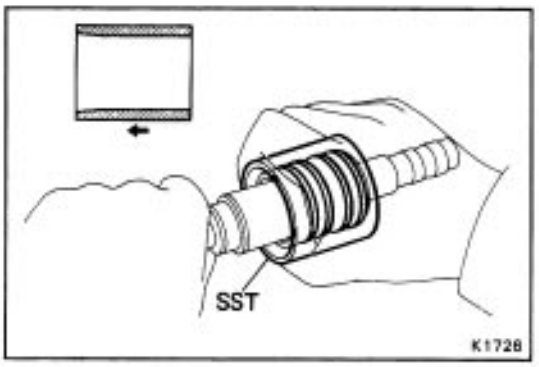

(d) Coat the teflon rings with power steering fluid, and carefully slide the tapered end of SST over the teflon rings to seat the rings.
SST 09631–20081

ASSEMBLY OF STEERING GEAR HOUSING

(See page SR–55)

1. COAT POWER STEERING FLUID OR GREASE ON FOLLOWING PARTS:

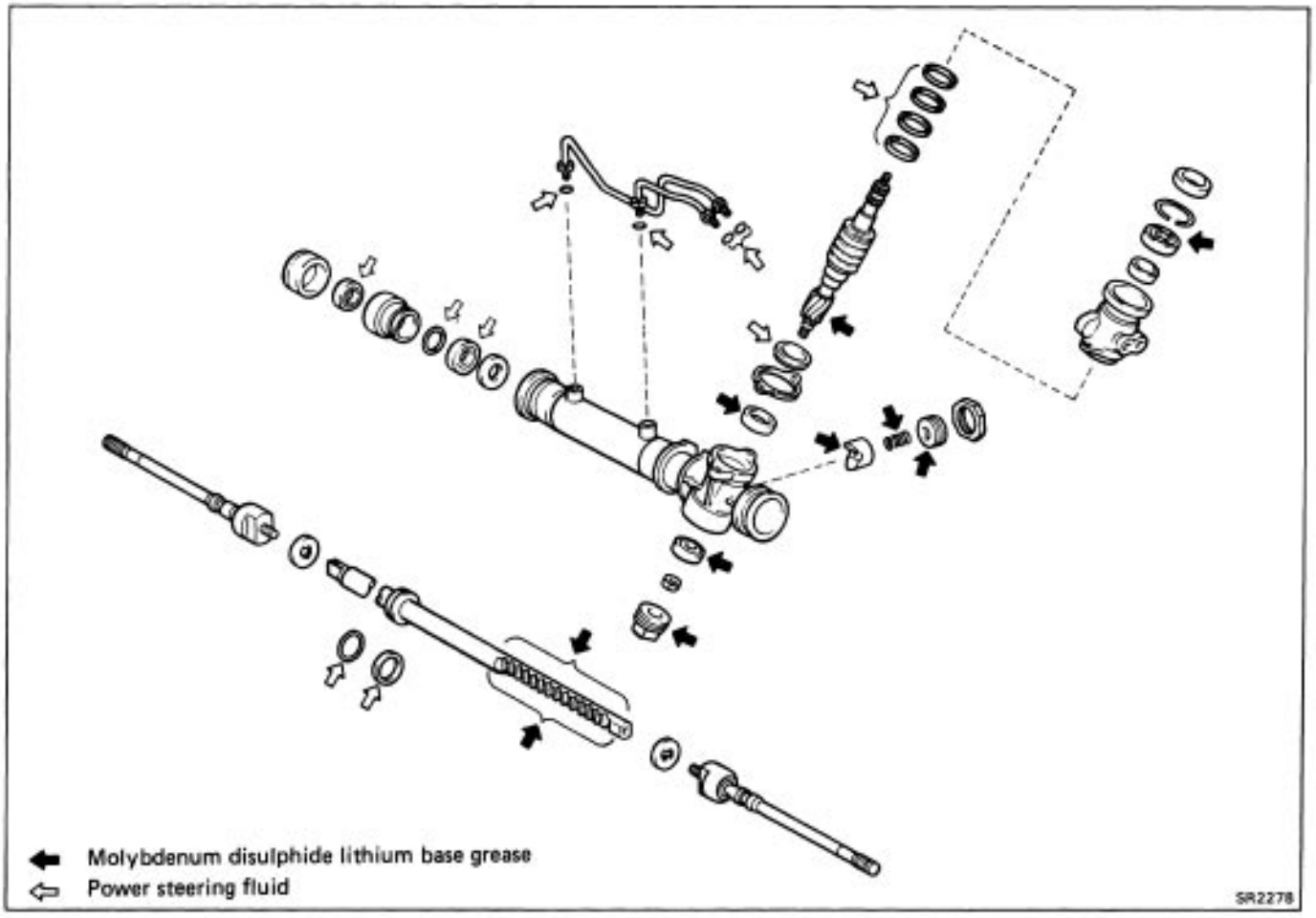

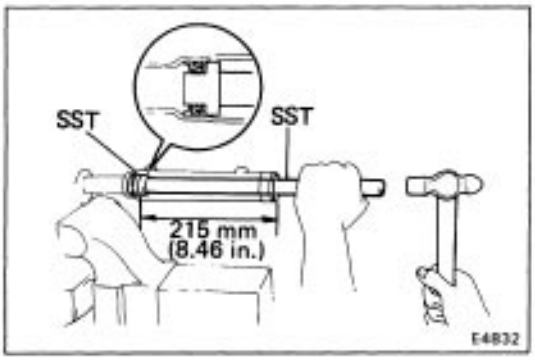

2. INSTALL CYLINDER HOUSING OIL SEAL AND SPACER

Install a new oil seal and spacer to SST, and drive in them with a plastic hammer.

SST 09631–12020 and 09631–12040

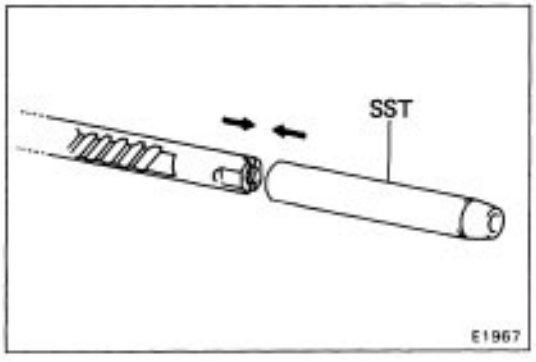

3. INSTALL RACK

(a) Install SST to the rack.

HINT: If necessary, scrape the burrs off the rack teeth end and burnish.

SST 09631–16020

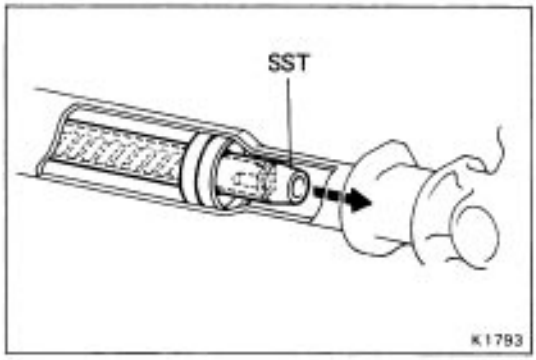

(b) Coat SST with power steering fluid.
(c) Insert the rack into the cylinder.
(d) Remove SST.
SST 09631–16020

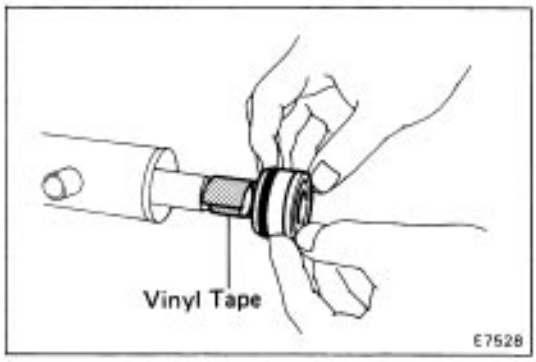

4. INSTALL RACK BUSHING

(a) Coat a new O–ring with power steering fluid and install it to the bushing.
(b) To prevent oil seal lip damage, wind vinyl tape on the steering rack end, and apply power steering fluid.

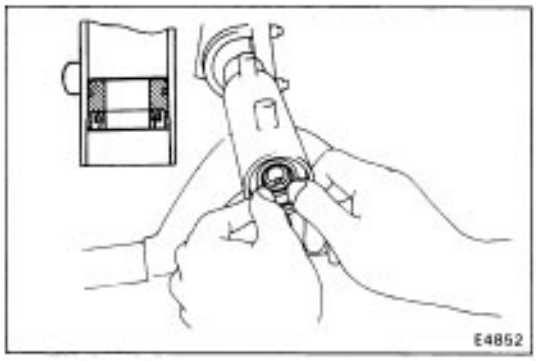

(e) Install the bushing by pushing it into the cylinder in the direction shown in drawing, without tilting.

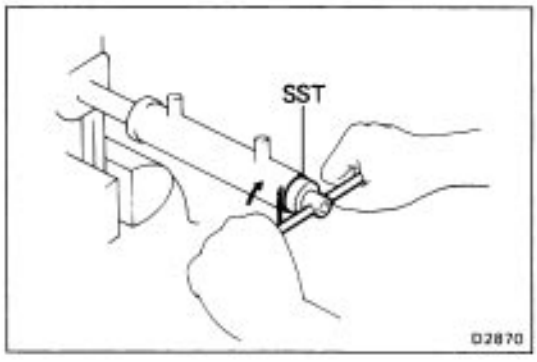

5. INSTALL CYLINDER END STOPPER

(a) Push in the cylinder end stopper until the wire installation hole appears.
(b) Insert a new wire end into the hole.
(c) Using SST, turn the cylinder end stopper clockwise until the wire end disappears.
SST 09631–10021

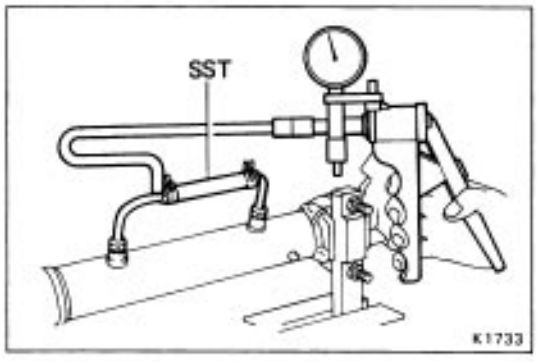

6. AIR TIGHTNESS TEST

(a) Install SST to the union of the cylinder housing.
SST 09631–12070
(b) Apply 400 mmHg (15.75 in.Hg, 53.3 kPa) of vacuum for about 30 seconds.
(c) Check that there is no change in the vacuum.

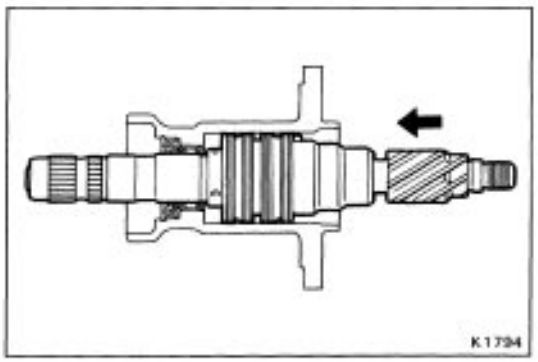

7. INSTALL CONTROL VALVE

(a) Coat the teflon rings with power steering fluid.

(b) Install the control valve into the housing.

NOTICE: Be careful not to damage the teflon rings and oil seal.

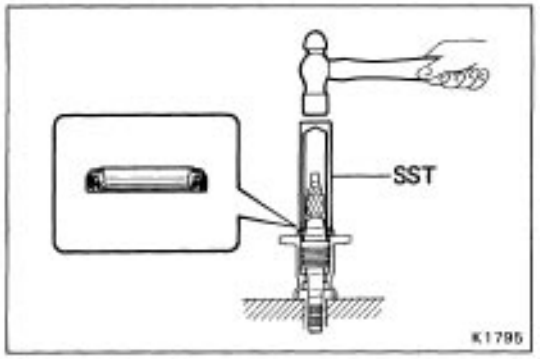

8. INSTALL OIL SEAL

(a) Coat a new oil seal with power steering fluid.

(b) Using SST, install the oil seal as shown.

SST 09612–22011

9. INSTALL DUST COVER

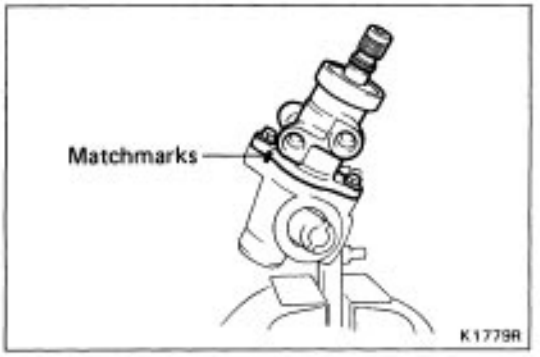

10. INSTALL CONTROL VALVE HOUSING

(a) Place a new gasket on the rack housing.

(b) Align the marks on the valve housing and rack housing.

(c) Torque the two bolts.

Torque: 185 kg–cm (13 ft–lb, 18 N–m)

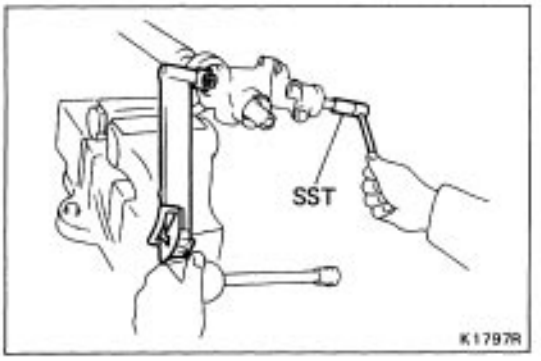

11. INSTALL SELF–LOCKING NUT

Using SST to hold the control valve, install a new self-locking nut.

SST 09616–00010

Torque: 250 kg–cm (18 ft–lb, 25 N–m)

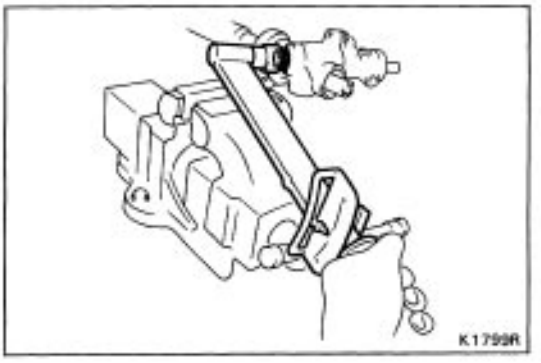

12. INSTALL RACK HOUSING CAP

(a) Apply sealant to 2 or 3 threads of the bolt end.

Sealant: Part No.08833–00080, THREE BOND 1344, LOCTITE 242 or equivalent

(b) Install the rack housing cap.

Torque: 600 kg–cm (43 ft–lb, 59 N–m)

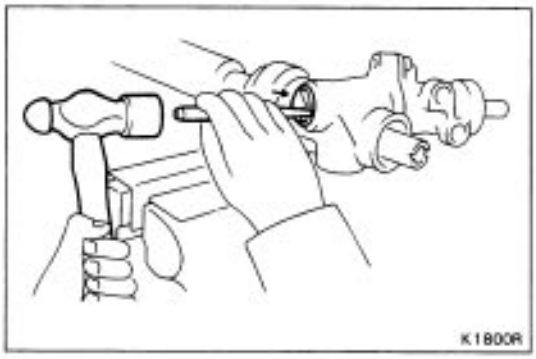

(c) Using a center punch, stake the housing at two place.

13. INSTALL RACK GUIDE AND RACK GUIDE SPRING

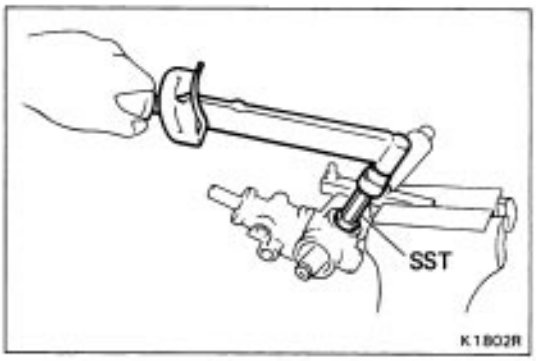

14. ADJUST TOTAL PRELOAD

(a) Apply sealant to 2 or 3 threads of the spring cap.
Sealant: Part No.08833–00080, THREE BOND 1344, LOCTITE 242 or equivalent

(b) Using SST, install and torque the spring cap.
SST 09612–10131
Torque: 250 kg–cm (18 ft–lb, 25 N–m)

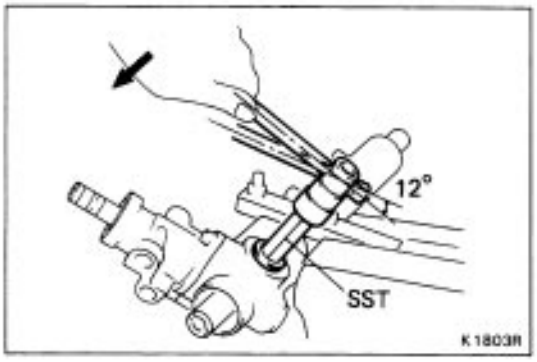

(c) Using SST, return the rack guide spring cap 121.
SST 09612–10131

(d) Turn the control valve shaft right and left one or two times.

(e) Loosen the spring cap until the rack guide compression spring is not functioning.

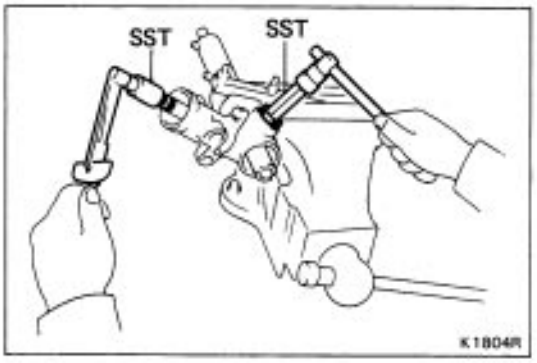

(f) Using SST and a torque meter, tighten the rack guide spring cap until the preload is within specification.
SST 09612–10131 and 09616–00010
Preload (turning): 9–12 kg–cm (7.8–10.4 in. –lb, 0.9–1.2 N–m)

15. INSTALL RACK GUIDE SPRING CAP LOCK NUT

(a) Apply sealant to 2 or 3 threads of the lock nut.
Sealant: Part No.08833–00080, THREE BOND 1344, LOCTITE 242 or equivalent

(b) Using SST, install and torque the lock nut.
SST 09612–10131 and 09617–12030
Torque: 540 kg–cm (39 ft–lb, 53 N–m)
HINT: Use a torque wrench with a fulcrum length of 425 mm (16.73 in.).

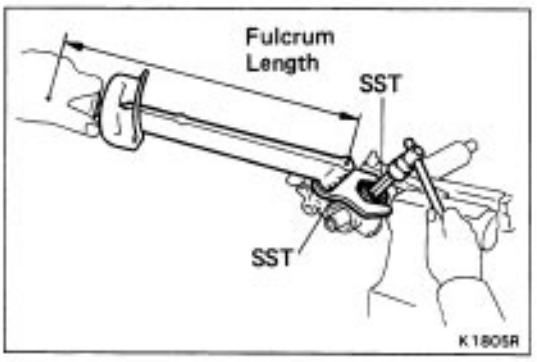

(c) Recheck the total preload.

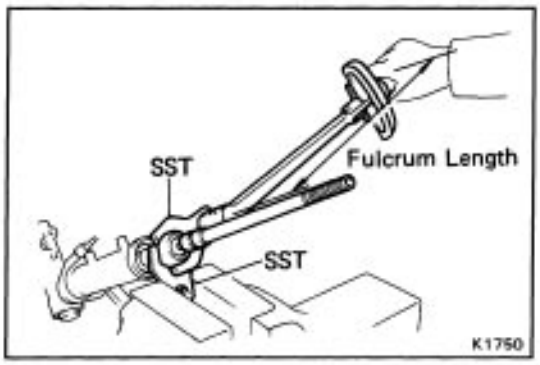

16. INSTALL CLAW WASHERS AND RACK ENDS

(a) Install a new claw washer.

(b) Using SST, install and torque the rack end.

SST 09612–10093 t09628–10020y
09612–24014 (09617–24011)

Torque: 730 kg–cm (53 ft–lb, 72 N–m)

HINT: Use a torque wrench with a fulcrum length of 340 mm (13. 39 in.).

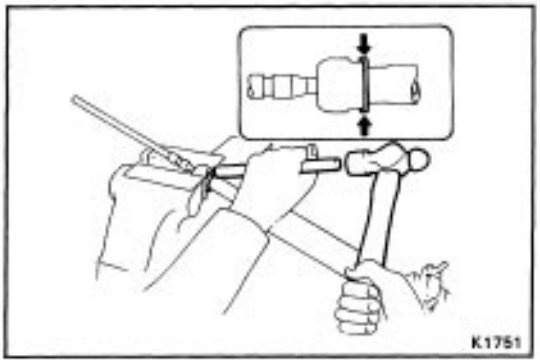

(c) Using a brass bar and hammer, stake the claw washer.

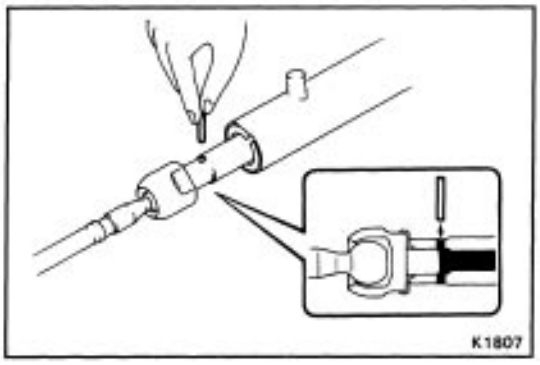

17. INSTALL RACK BOOTS

(a) Insure that the tube hole is not clogged with grease.

HINT: If the tube hole is clogged, the pressure inside the boot will change after it is assembled and the steering wheel turned.

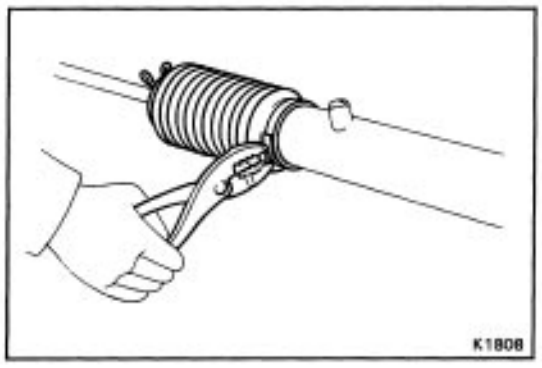

(b) Install the boots.

HINT: Be careful not to damage or twist the boots.

(c) Install the clamps.

(d) Install the clips with the ends facing outward.

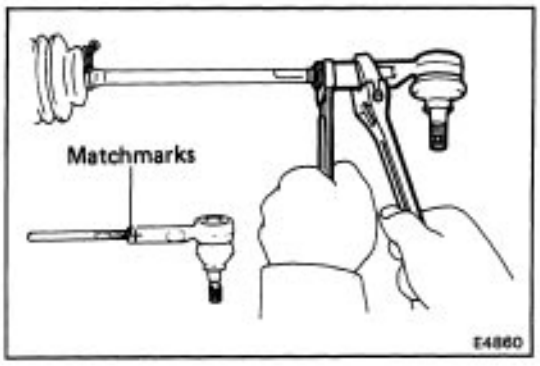

18. INSTALL TIE ROD ENDS

(a) Screw the lock nuts and tie rod ends onto the rack ends until the matchmarks are aligned.

(b) After adjusting toe–in, torque the lock nut.

Torque: 570 kg–cm (41 ft–lb, 56 N–m)

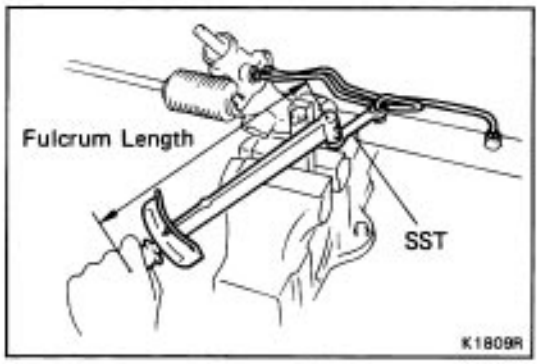

19. INSTALL RIGHT AND LEFT TURN PRESSURE TUBES

(a) Install four new O–rings to the tubes.

(b) Using SST, install the tubes.

SST 09633–00020

Torque: 110 kg–cm (8 ft–lb, 11 N–m)

HINT: Use a torque wrench with a fulcrum length of 300 mm (11.81 in.).

COMPONENTS (TOYOTA Type)

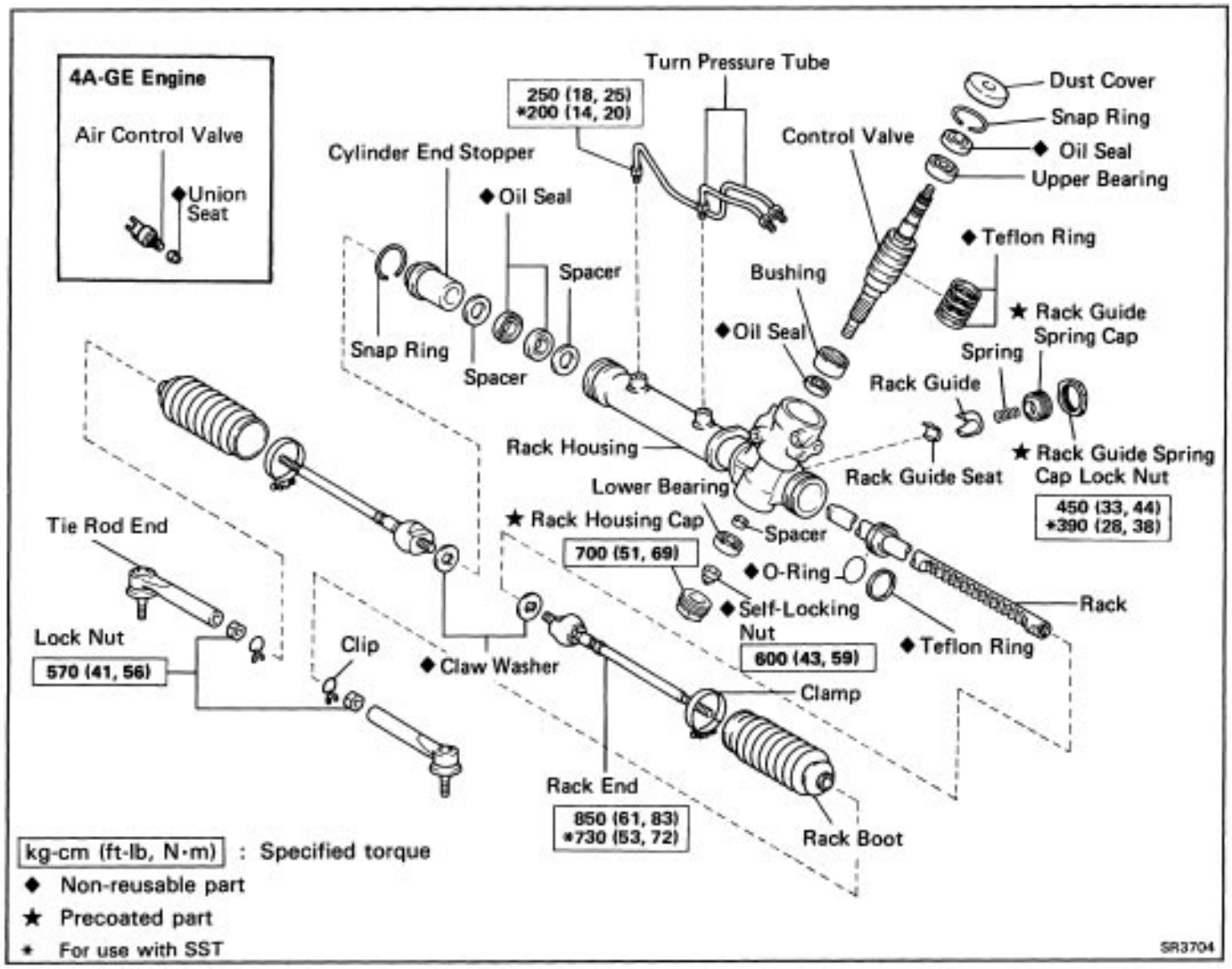

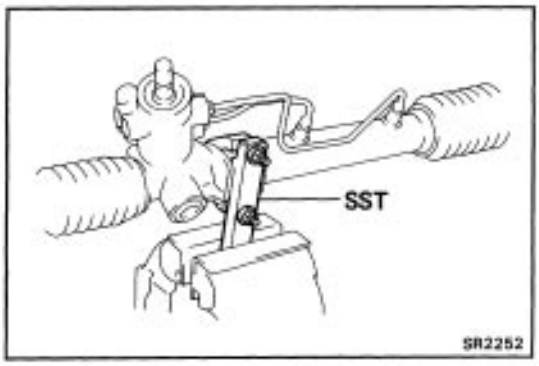

DISASSEMBLY OF STEERING GEAR HOUSING

1. CLAMP GEAR HOUSING IN VISE

Using SST, secure the steering gear in a vise.
SST 09612–00012

2. (4A–GE Engine)

REMOVE AIR CONTROL VALVE

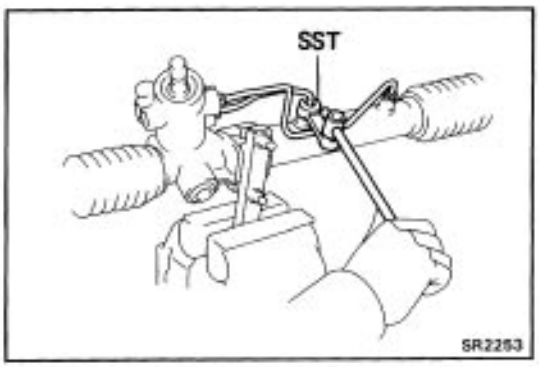

3. REMOVE RIGHT AND LEFT TURN PRESSURE TUBES

Using SST, remove the pressure tubes.
SST 09633–00020

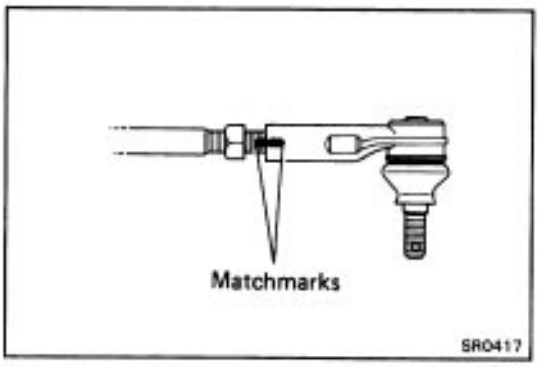

4. REMOVE TIE ROD ENDS

(a) Loosen the lock nut and place matchmarks on the tie rod end and rack end.

(b) Remove the tie rod ends and lock nuts.

5. REMOVE RACK BOOTS

(a) Remove the clips and clamps.

(b) Remove the rack boots.

6. REMOVE RACK ENDS AND CLAW WASHERS

(See step 5 on page SR–56)

7. REMOVE RACK GUIDE SPRING CAP LOCK NUT

Using SST, remove the rack guide spring cap lock nut.

SST 09617–12020

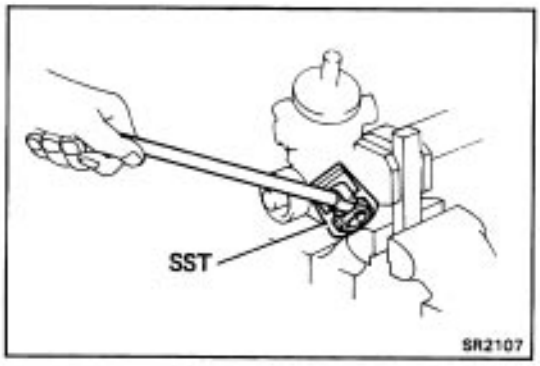

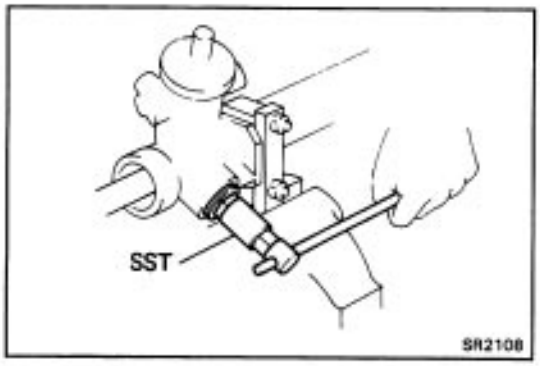

8. REMOVE RACK GUIDE SPRING CAP

Using SST, remove the rack guide spring cap.

SST 09612–24014 (09612–10022)

9. REMOVE RACK GUIDE SPRING, RACK GUIDE AND SEAT

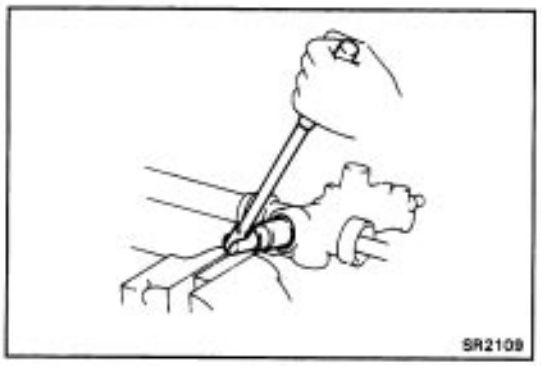

10. REMOVE RACK HOUSING CAP

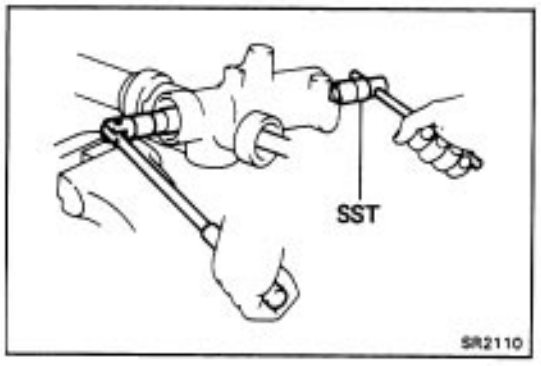

11. REMOVE SELF–LOCKING NUT AND LOWER BEARING

(a) Using SST to hold the control valve, remove the self-locking nut.

SST 09616–00010

(b) Remove the lower bearing and spacer.

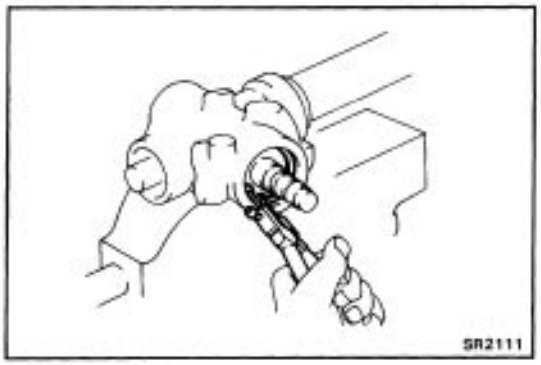

12. REMOVE CONTROL VALVE

(a) Using snap ring pliers, remove the snap ring.

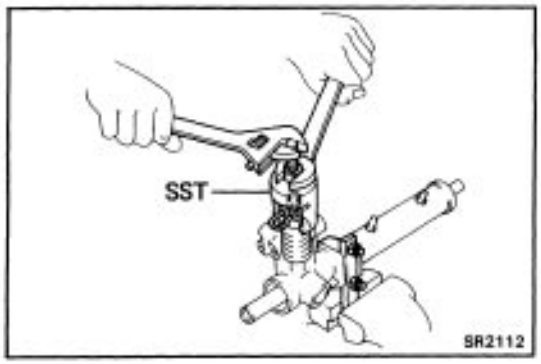

(b) Using SST, remove the control valve with the upper bearing and oil seal.
SST 09613–12010
NOTICE: Never attempt to tap out the control valve as this would damage it.

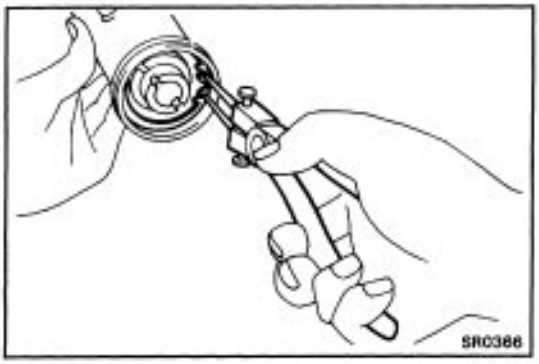

13. REMOVE CYLINDER END STOPPER

(a) Using snap ring pliers, remove the snap ring.
(b) Remove the cylinder end stopper and spacer.

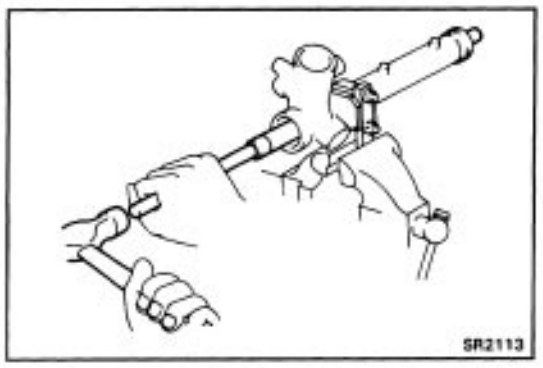

14. REMOVE RACK WITH OIL SEAL

Slightly tap the rack end with a brass bar and hammer. Tap out the rack and the oil seal.

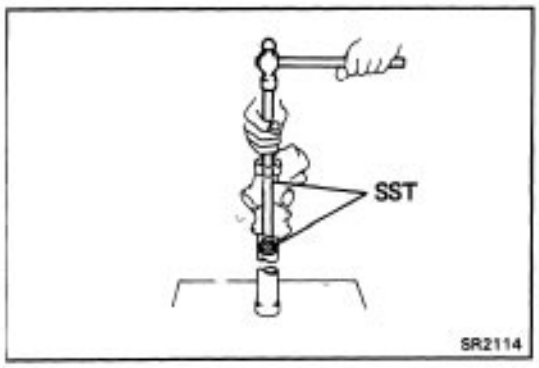

15. REMOVE CYLINDER OIL SEAL AND SPACER

Using SST, remove the oil seal with the spacer.
SST 09631–12020 and 09631–12031

.

HINT: Extension may be required to the SST 09631–12020 to completely remove the seal from the housing.

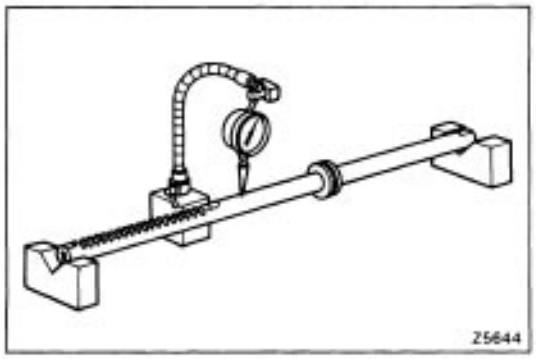

INSPECTION AND REPAIR OF GEAR HOUSING

COMPONENTS

1. INSPECT RACK

(a) Check the rack for runout and for teeth wear or damage.
Maximum runout: 0.3 mm (0.012 in.)

(b) Check the back surface for wear or damage.
If faulty, replace it.

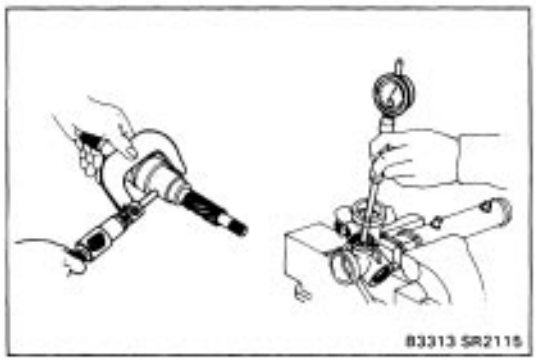

2. MEASURE OIL CLEARANCE OF SHAFT AND BUSHING

Using a micrometer and cylinder gauge, measure the oil clearance.

Standard clearance: 0.021–0.083 mm (0.0008–0.0033 in.)
Maximum clearance: 0.125 mm (0.0049 in.)

If more than maximum, replace the bushing.

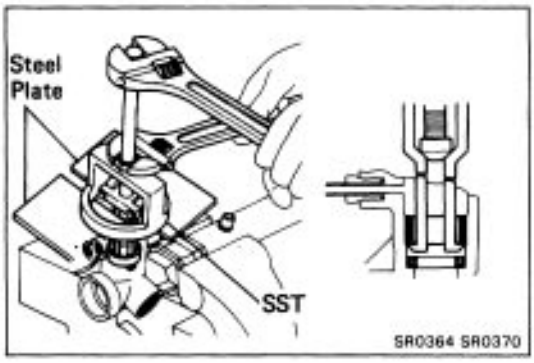

3. IF NECESSARY, REPLACE BUSHING AND OIL SEAL

(a) Using SST, remove the bushing.
SST 09612–65014 (09612–01030)

NOTICE: As shown, from the opposite side of SST confirm that its claw is firmly caught on the bushing.

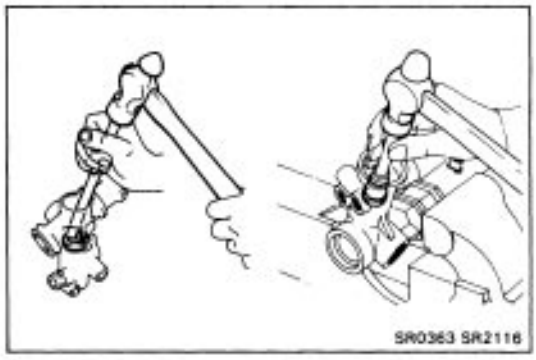

(b) Using a brass bar, remove the oil seal.

(c) Coat a new oil seal lip with power steering fluid.

(d) Using a 24–mm socket wrench and extension bar, tap the oil seal in the housing.

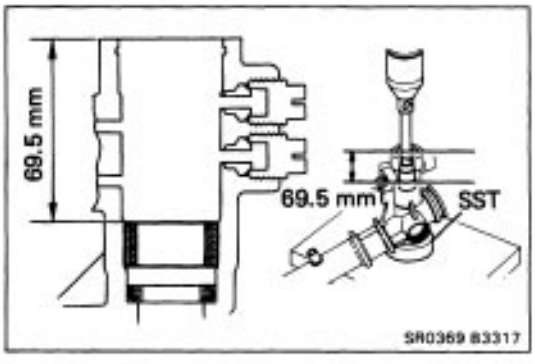

(e) Using SST, 24–mm socket wrench and extension bar, carefully press in a new bushing to a depth of 69.5 mm (2.736 in.).
SST 09515–21010

NOTICE: If the bushing is pushed in too far, it will cause deformation of the housing. If it is not pushed in far enough, it will interfere with the control valve. Therefore, always use a press and install the bushing to the proper depth. Then, install the control valve and insure that it rotates smoothly.

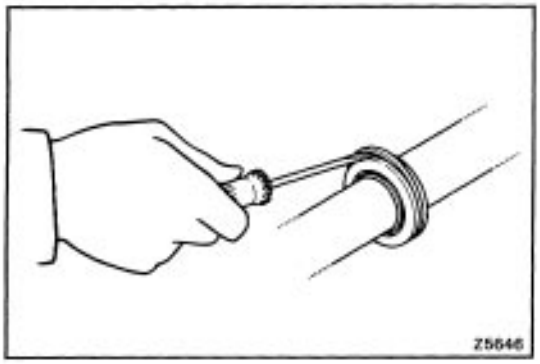

4. IF NECESSARY, REPLACE TEFLON RING AND O–RING

(a) Remove the teflon ring and 0–ring.

NOTICE: Be careful not to damage the rack.

(b) Install a new 0–ring.

(c) Expand a new teflon ring with your fingers.

NOTICE: Be careful not to over–expand the teflon ring.

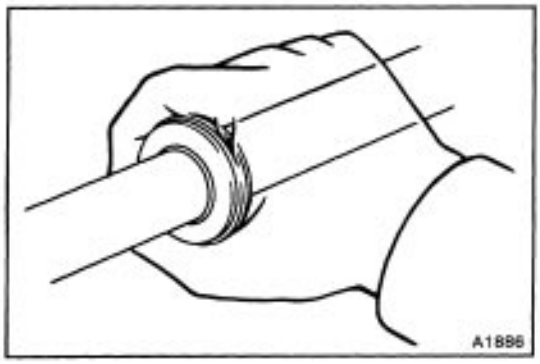

(d) Install the teflon ring to the steering rack.

(e) Coat the teflon ring with power steering fluid and snug it down with your fingers.

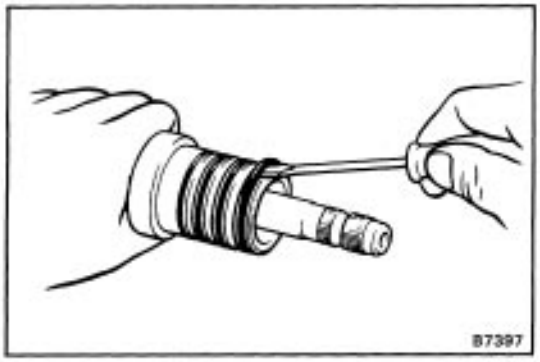

5. IF NECESSARY, REPLACE CONTROL VALVE TEFLON RINGS

(a) Using a screwdriver, remove the teflon rings.

NOTICE: Be careful not to damage the control valve.

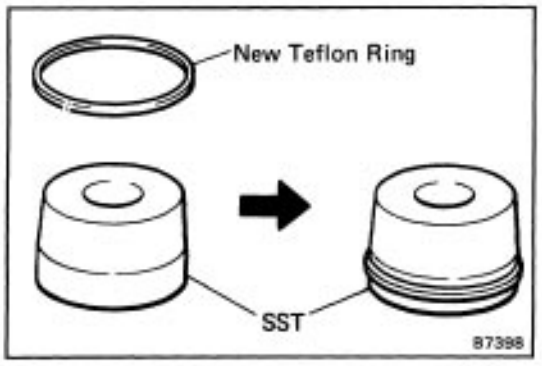

(b) Install new teflon rings to SST and expand them.
SST 09631–20070

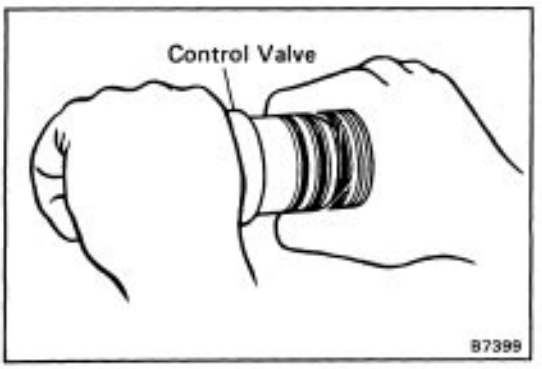

(c) Install the expanded teflon rings to the control valve and snug them down with your fingers.

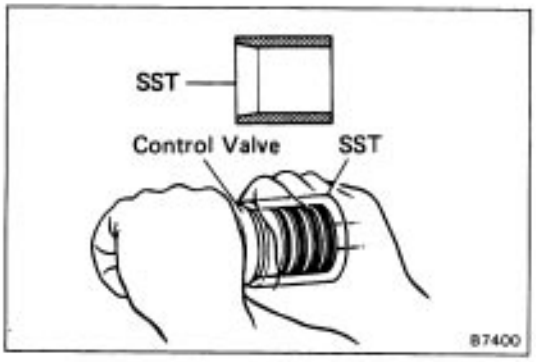

(d) Coat the teflon rings with power steering fluid, and carefully slide the tapered end of SST over the teflon rings to seat the rings.
SST 09631–20081

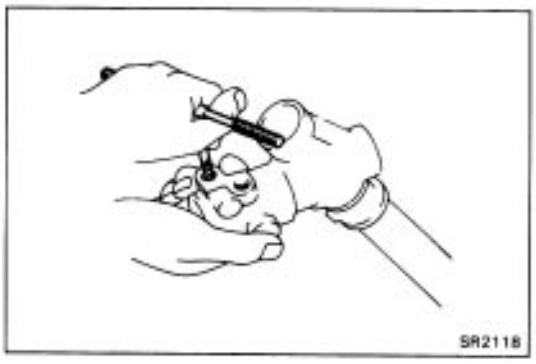

6. IF NECESSARY, REPLACE UNION SEAT

(a) Using a screw extractor, remove the union seat.

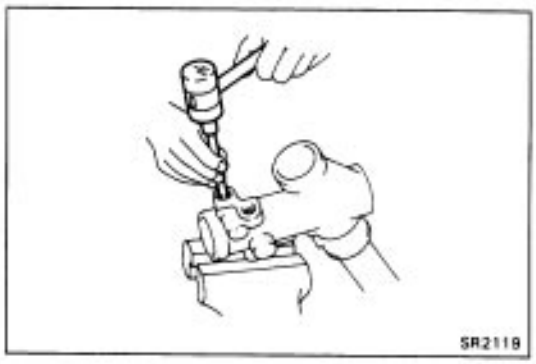

(b) Using a plastic hammer and extension bar, tap in a new union seat.

ASSEMBLY OF STEERING GEAR HOUSING

(See page SR–69)

1. COAT POWER STEERING FLUID OR GREASE ON FOLLOWING PARTS:

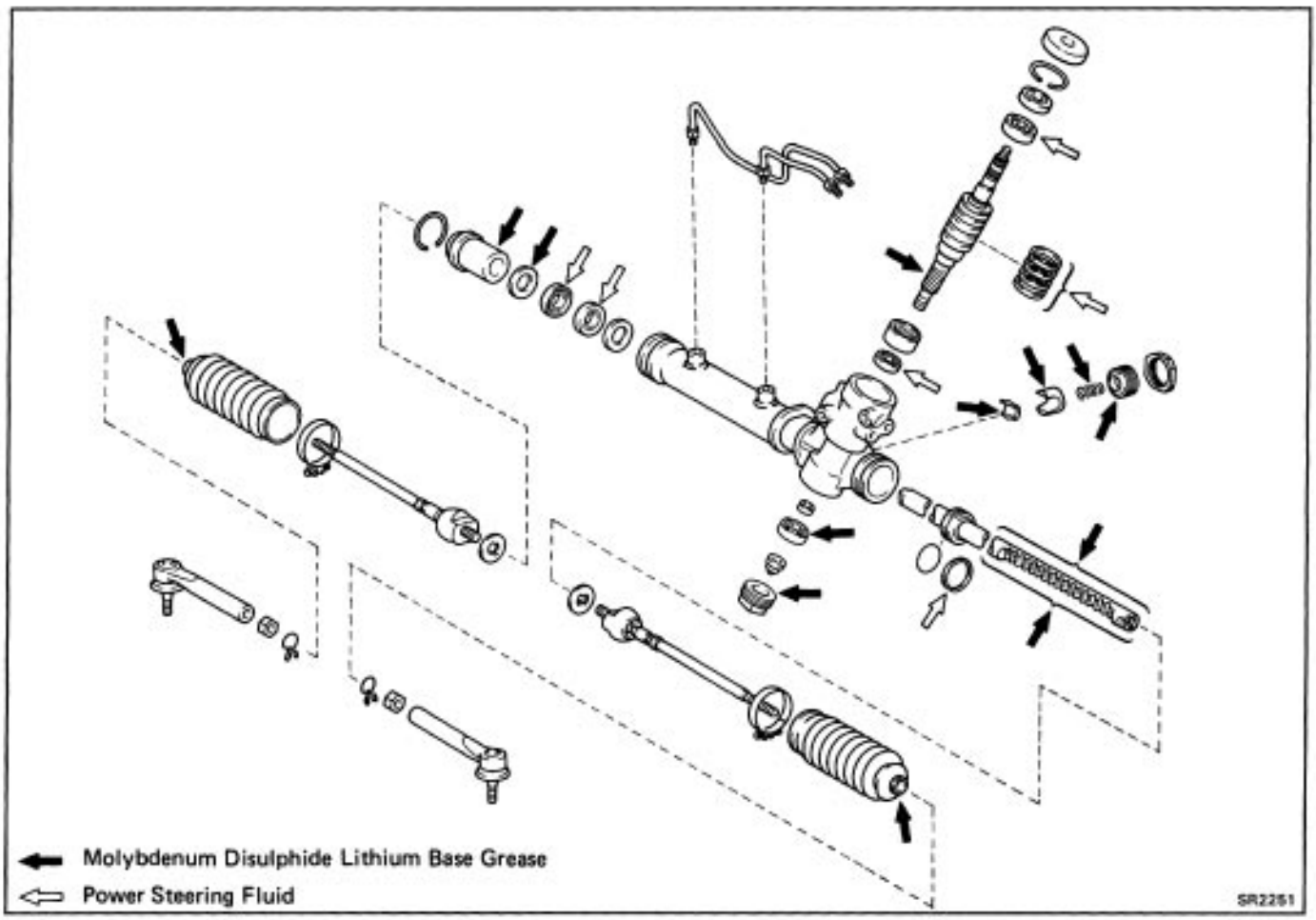

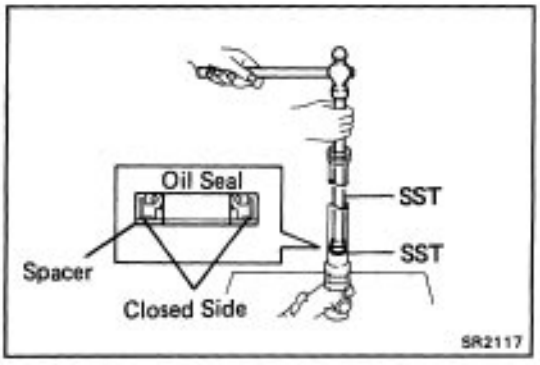

2. INSTALL CYLINDER HOUSING OIL SEAL AND SPACER

Install a new oil seal and spacer to SST, and drive them in with a plastic hammer.

SST 09631–12020 and 09631–12040

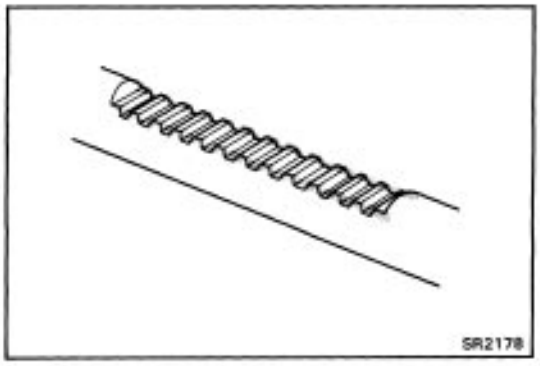

3. INSTALL RACK

(a) Install SST to the rack.

HINT: If necessary, scrape the burrs off the rack teeth end and burnish.

SST 09631–16020

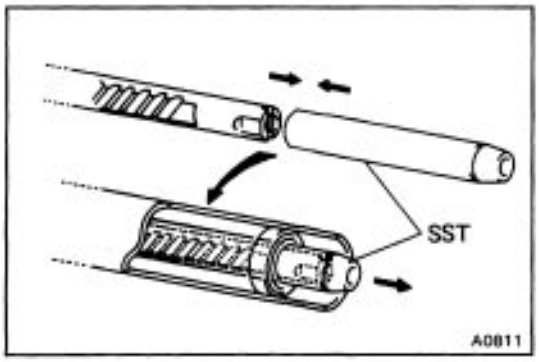

(b) Coat SST with power steering fluid.
(c) Insert the rack into the cylinder.
(d) Remove SST.
SST 09631–16020

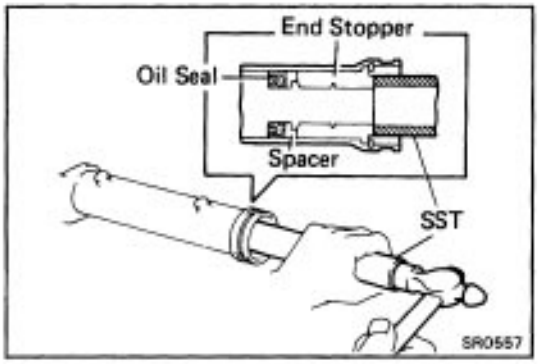

4. INSTALL CYLINDER END STOPPER, OIL SEAL AND SPACER

NOTICE: See illustration for proper installation of the parts.

(a) To prevent oil seal lip damage, install SST to the rack's other end.
SST 09631–16020
(b) Coat SST with power steering fluid.
(c) Install a new oil seal to the rack.
(d) Remove SST.
(e) Using SST, tap in the oil seal, spacer and end stopper into the cylinder.
SST 09612–22011
(f) Using snap ring pliers, install the snap ring.

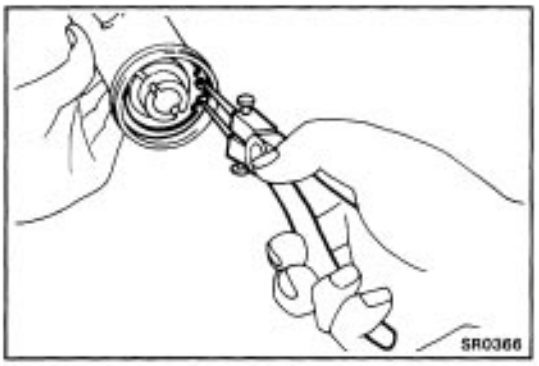

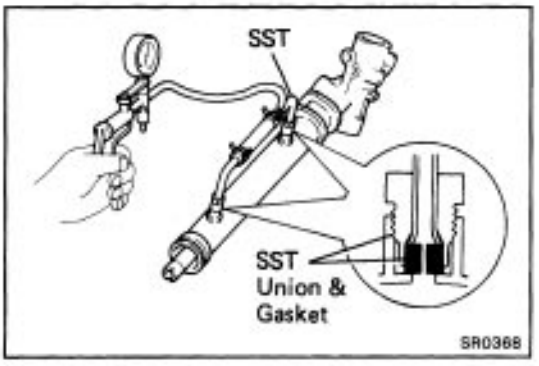

5. AIR TIGHTNESS TEST

(a) Install SST to the union of the cylinder housing.
SST 09631–12070
(b) Apply 400 mmHg (15.75 in.Hg, 53.3 kPa) of vacuum for about 30 seconds.
(c) Check that there is no change in the vacuum.

6. INSTALL CONTROL VALVE INTO HOUSING

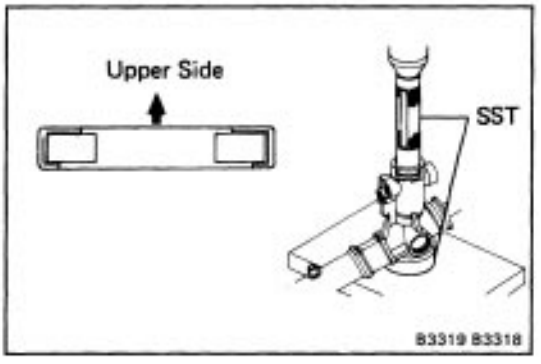

7. INSTALL UPPER BEARING

Using SST and a press, install the upper bearing as shown.
SST 09515–21010 and 09612–22011

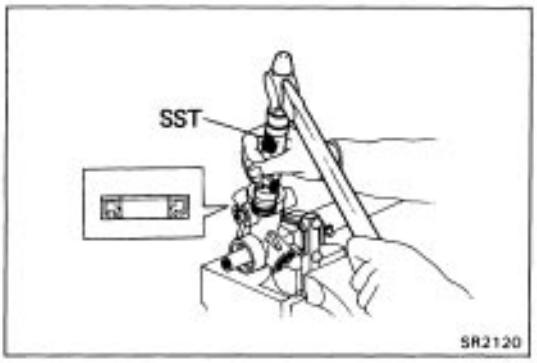

8. INSTALL OIL SEAL AND SNAP RING

(a) Using SST, install a new oil seal.
SST 09612–22011

(b) Using snap ring pliers, install the snap ring.

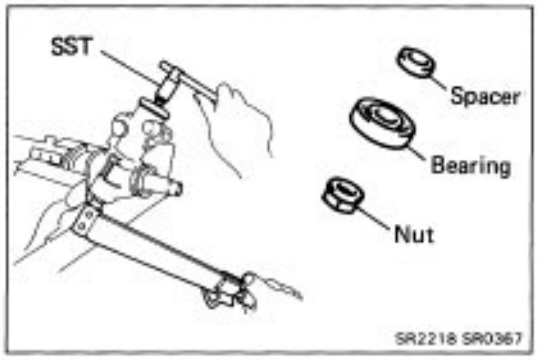

9. INSTALL SPACER, LOWER BEARING AND SELF–LOCKING NUT ON CONTROL VALVE SHAFT

(a) Install the spacer and bearing to the control valve shaft.

(b) Using SST to hold the control valve, install and torque a new self–locking nut.
SST 09616–00010

Torque: 600 kg–cm (43 ft–lb, 59 N–m)

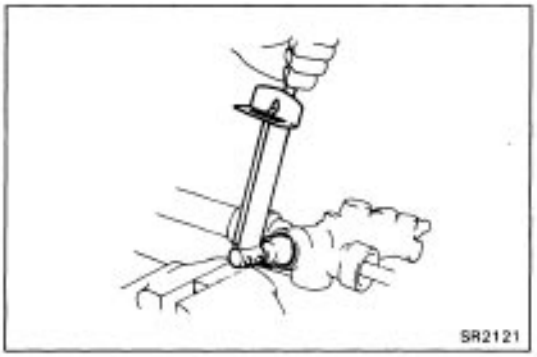

10. INSTALL RACK HOUSING CAP

(a) Apply sealant to the screws of the housing cap.
Sealant: Part No.08833–00080, THREE BOND 1344, LOCTITE 242 or equivalent

(b) Install and torque the housing cap.

Torque: 700 kg–cm (51 ft–lb, 69 N–m)

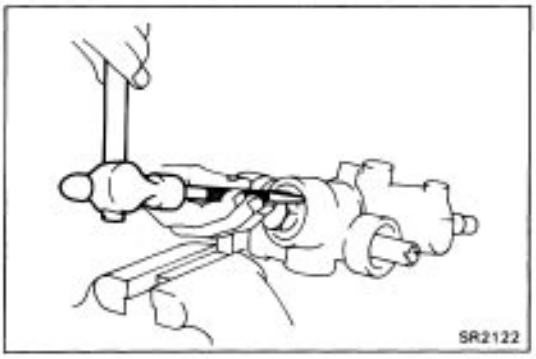

(c) Using a hammer and chisel, stake the two parts of the housing cap.

11. INSTALL RACK GUIDE SEAT, RACK GUIDE AND RACK GUIDE SPRING

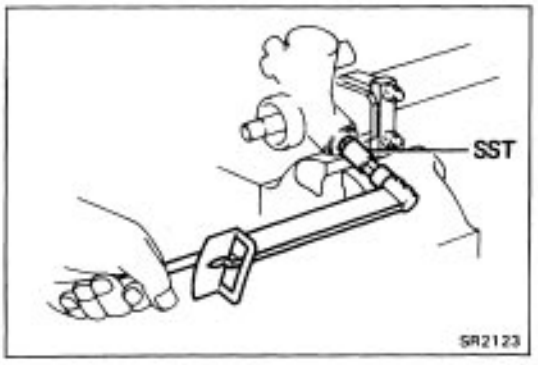

12. ADJUST TOTAL PRELOAD

(a) Apply sealant to 2 or 3 threads of the spring cap.
Sealant: Part No.08833–00080, THREE BOND 1344, LOCTITE 242 or equivalent

(b) Using SST, install and torque the spring cap.
SST 09612–24014 (09612–10022)

Torque: 250 kg–cm (18 ft–lb, 25 N–m)

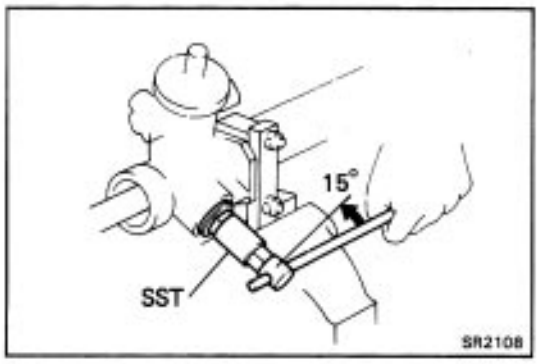

(c) Using SST, return the rack guide spring cap 150.
SST 09612–24014 (09612–10022)
(d) Turn the control valve shaft right and left one or two times.
(e) Loosen the spring cap until the rack guide compression spring is not functioning.

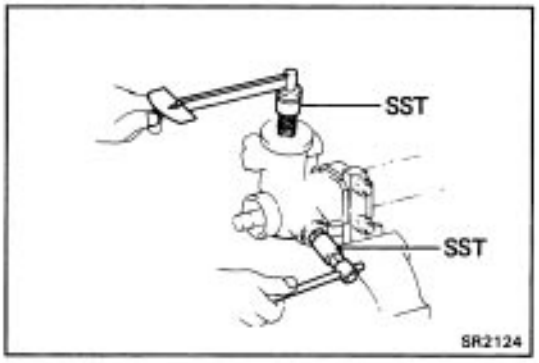

(f) Using SST and a torque meter, tighten the rack guide spring cap until the preload is within specification.
SST 09612–24014 (09612–10022) and 09616–00010
Preload (turning): 8–13 kg–cm
(6.9–11.3 in.–lb, 0.8–1.3 N–m)

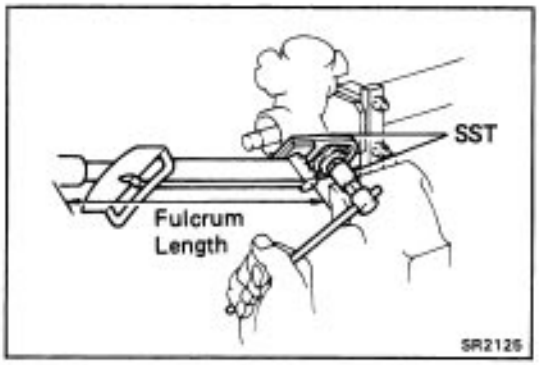

13. INSTALL RACK GUIDE SPRING CAP LOCK NUT
(a) Apply sealant to 2 or 3 threads of the lock nut.
Sealant: Part No.08833–00080, THREE BOND 1344, LOCTITE 242 or equivalent
(b) Using SST, install and torque the lock nut.
SST 09612–24014 (09612–10022) and 09617–12020
Torque: 390 kg–cm (28 ft–lb, 38 N–m)
HINT: Use a torque wrench with a fulcrum length of 300 mm (11.81 in.).
(c) Recheck the total preload.

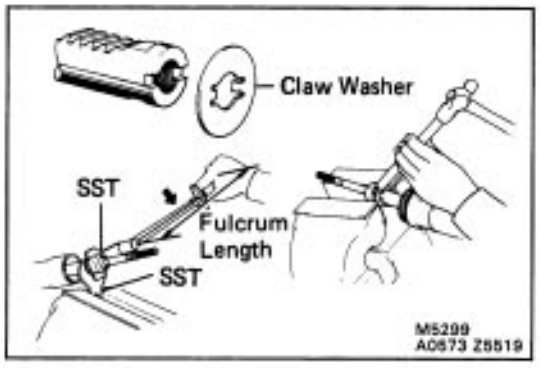

14. INSTALL CLAW WASHERS AND RACK ENDS
(a) Install a new claw washer.
(b) Using SST, install and torque the rack end.
SST 09612–10093 (09628–10020)
09612–24014 (09617–24011)
Torque: 730 kg–cm (53 ft–lb, 72 N–m)
HINT: Use a torque wrench with a fulcrum length of 340 mm (13.39 in.).
(c) Using a brass bar and hammer, stake the claw washer.

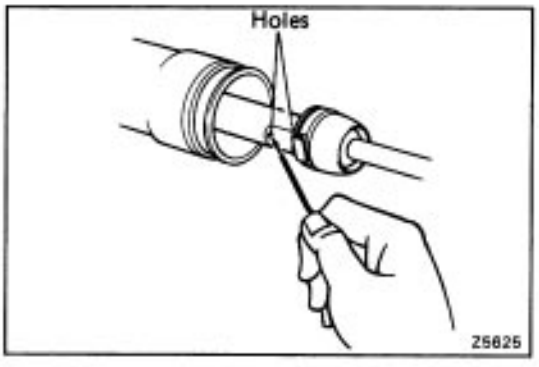

15. INSTALL RACK BOOTS, CLAMPS AND CLIPS
(a) Insure that the tube hole is not clogged with grease.
HINT: If the tube hole is clogged, the pressure inside the boot will change after it is assembled and the steering wheel turned.

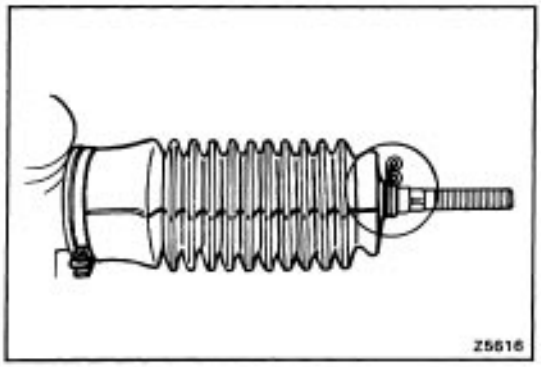

(b) Install the boots.
HINT: Be careful not to damage or twist the boots.
(c) Install the clamps.
(d) Install the clips with the ends facing outward.

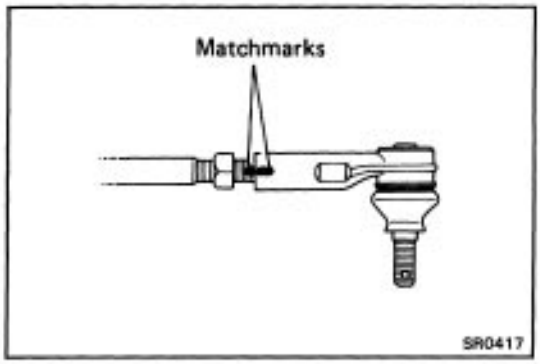

16. INSTALL TIE ROD ENDS

(a) Screw the lock nuts and tie rod ends onto the rack ends until the matchmarks are aligned.
(b) After adjusting toe–in, torque the lock nut.
Torque: 570 kg–cm (41 ft–lb, 56 N–m)

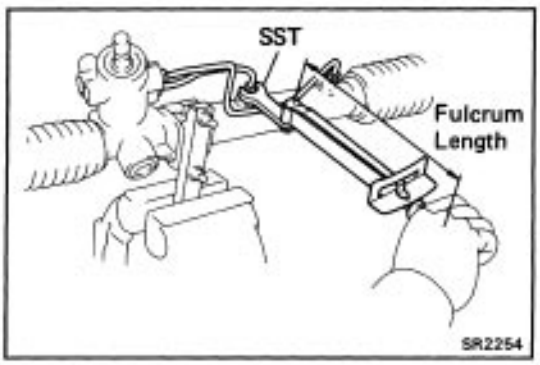

17. INSTALL RIGHT AND LEFT TURN PRESSURE TUBES

Using SST, install and torque the tubes.
SST 09633–00020
Torque: 200 kg–cm (14 ft–lb, 20 N–m)
HINT: Use a torque wrench with a fulcrum length of 300 mm (11.81 in.).

18. (4A–GE Engine)
INSTALL AIR CONTROL VALVE

STARTING SYSTEM

TROUBLESHOOTING

Problem	Possible cause	Remedy	Page
Engine will not crank	Battery charge low	Check battery specific gravity Charge or replace battery	CH–3
	Battery cables loose, corroded or worn	Repair or replace cables	
	Clutch start switch faulty (M/T)	Adjust or replace clutch start switch	
	Clutch starter relay faulty (M/T)	Replace starter relay	
	Neutral start switch faulty (A/T)	Replace switch	
	Fusible link blown	Replace fusible link	
	Starter faulty	Repair starter	ST–3, 4
	Ignition switch faulty	Replace ignition switch	
Engine cranks slowly	Battery charge low	Check battery specific gravity Charge or replace battery	CH–3
	Battery cables loose, corroded or worn	Repair or replace cables	
	Starter faulty	Repair starter	ST–3, 4
Starter keeps running	Starter faulty	Repair starter	ST–3, 4
	Ignition switch faulty	Replace ignition switch	
	Short in wiring	Repair wiring	
Starter spins – engine will not crank	Pinion gear teeth broken or faulty starter	Repair starter	ST–3, 4
	Flywheel teeth broken	Replace flywheel	

STARTER

COMPONENTS

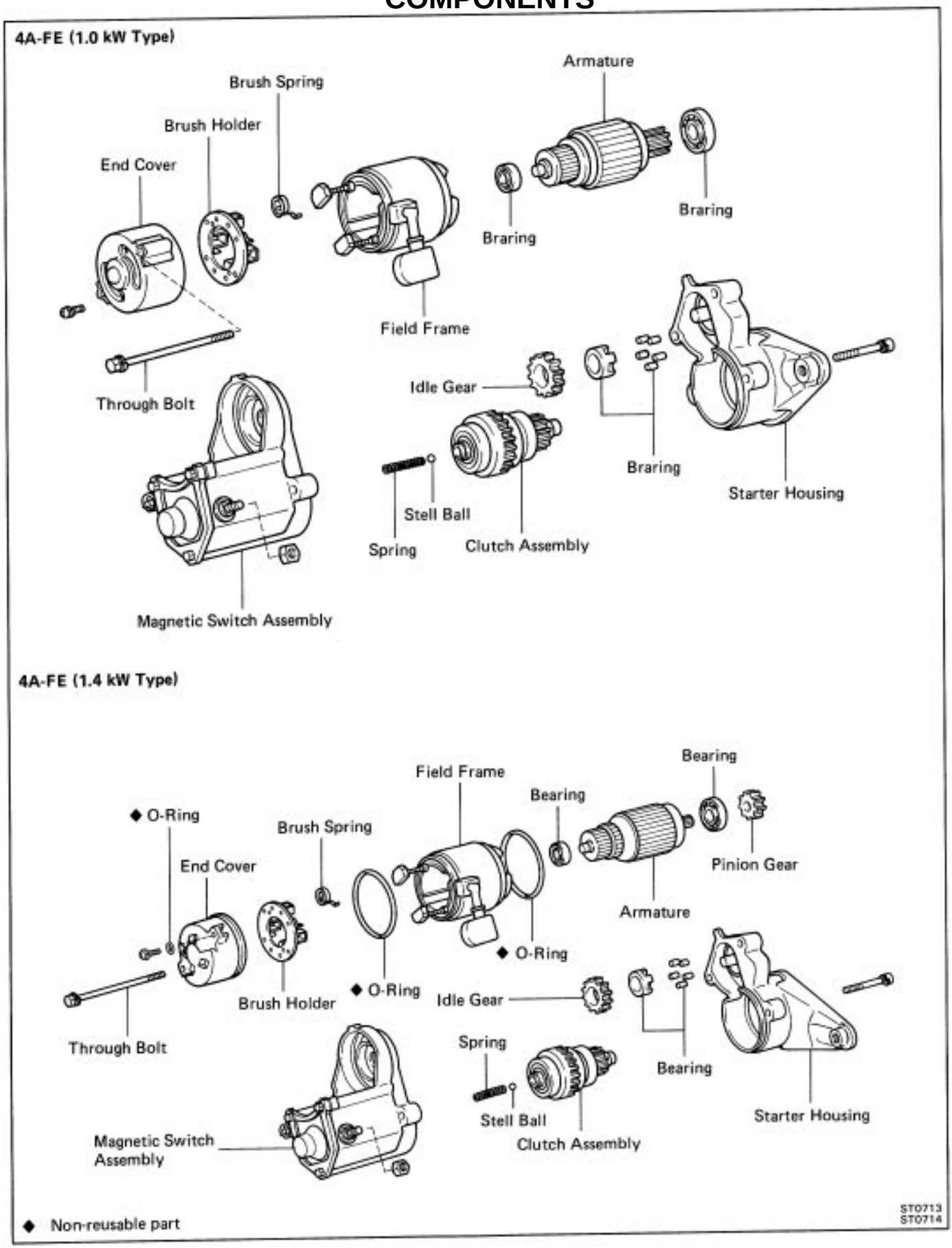

COMPONENTS (Cont'd)

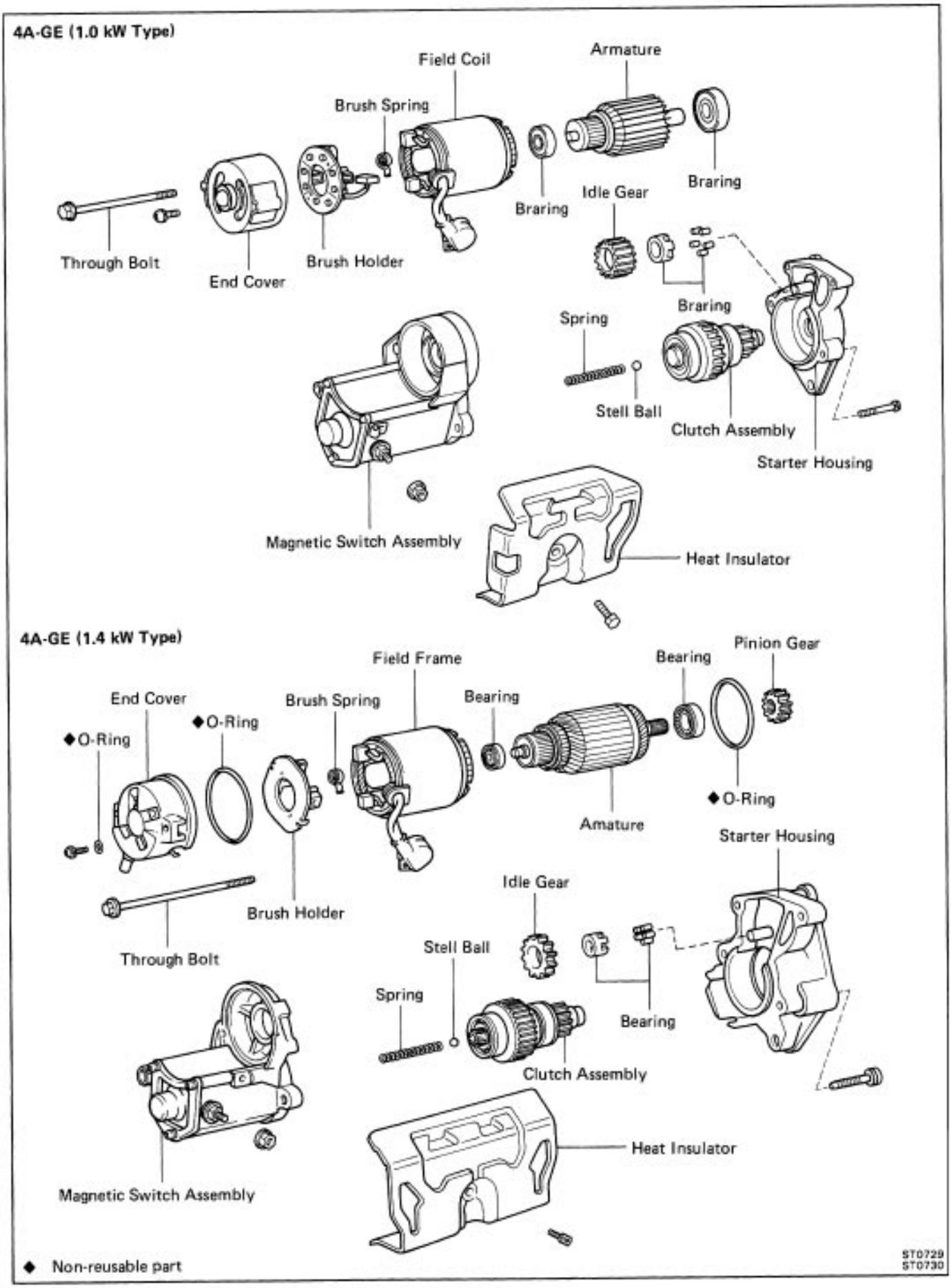

REMOVAL OF STARTER

(4A–FE)

1. DISCONNECT CABLE FROM NEGATIVE TERMINAL OF BATTERY

2. REMOVE AIR CLEANER ASSEMBLY

(See step 10 on page EM–118)

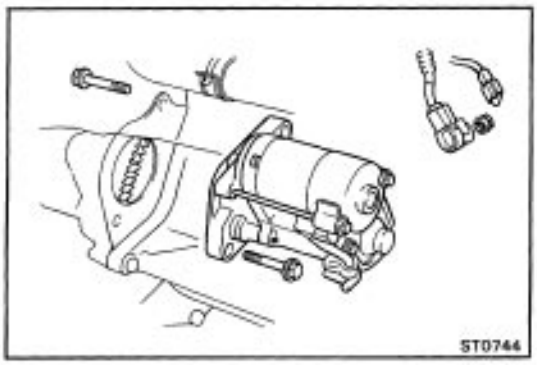

3. REMOVE STARTER

(a) Remove the two bolts.

(b) Remove the nut and disconnect the battery cable from the magnetic switch on the starter motor. Disconnect the other wire from terminal 50.

(4A–GE)

1. DISCONNECT CABLE FROM NEGATIVE TERMINAL OF BATTERY

2. REMOVE RH AND LH ENGINE UNDER COVERS

3. REMOVE FRONT EXHAUST PIPE

(See step 24 on page EM–127)

4. REMOVE ELECTRIC COOLING FAN (See page CO–23)

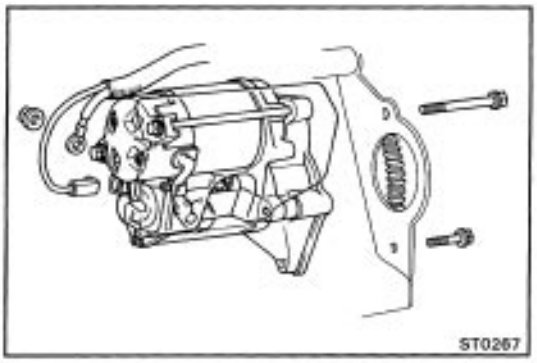

5. REMOVE STARTER

(a) Remove the two bolts.

(b) Remove the nut and disconnect the battery cable from the magnetic switch on the starter. Disconnect the connector from terminal 50.

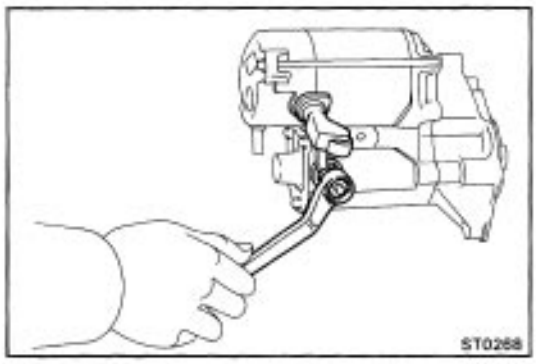

DISASSEMBLY OF STARTER

(See page ST–4, 5)

1. (4A–GE)

REMOVE HEAT INSULATOR

2. REMOVE FIELD FRAME WITH ARMATURE FROM MAGNETIC SWITCH ASSEMBLY

(a) Remove the nut and lead wire from the magnetic switch terminal.

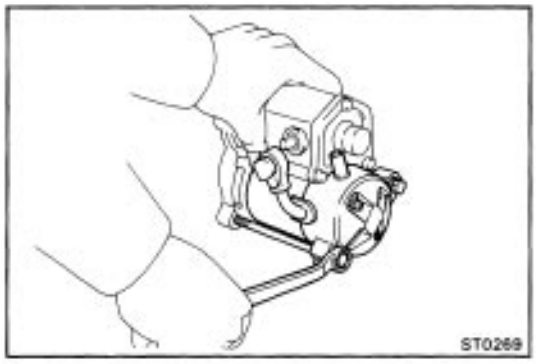

(b) Remove the two through bolts. Pull out the field frame with the amateur from the magnetic switch assembly.

(c) (1.4 kW type)
Remove the O–ring.

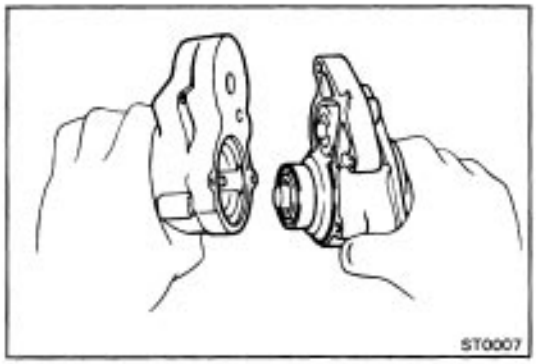

3. REMOVE STARTER HOUSING FROM MAGNETIC SWITCH ASSEMBLY

[1.0 kW type]

Remove the two screws and remove the starter housing with the idler gear and clutch assembly.

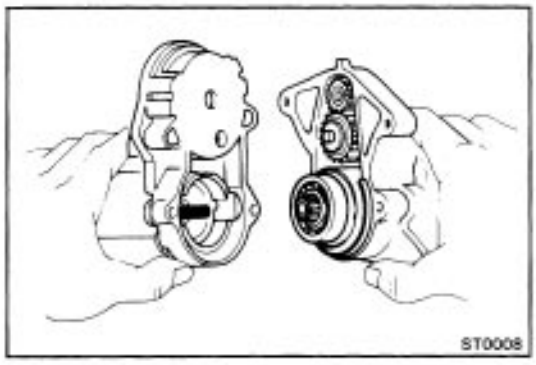

[1.4 kW type]

Remove the two screws and remove the starter housing with the pinion gear, idler gear and clutch assembly.

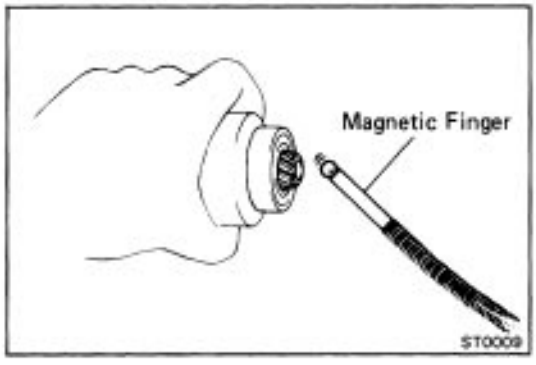

4. REMOVE CLUTCH ASSEMBLY AND GEARS FROM STARTER HOUSING

5. REMOVE STEEL BALL AND SPRING

Using a magnetic finger, remove the spring and steel ball from the clutch shaft hole.

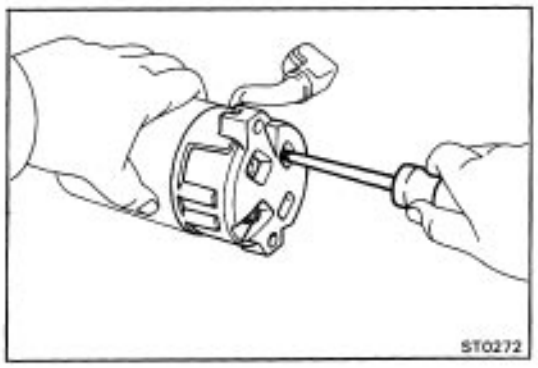

6. REMOVE BRUSHES AND BRUSH HOLDER

(a) Remove the two screws and end cover from the field frame.

(b) (1.4 kW type)
Remove the O–ring.

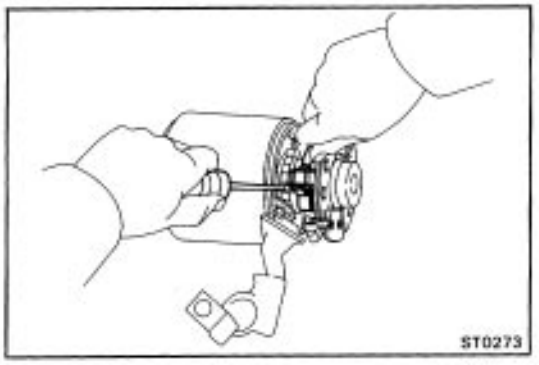

(c) Using a screwdriver or steel wire, separate the brush springs, and remove the brushes from the brush holder.

(b) Pull the brush holder off the field frame.

7. REMOVE ARMATURE FROM FIELD FRAME

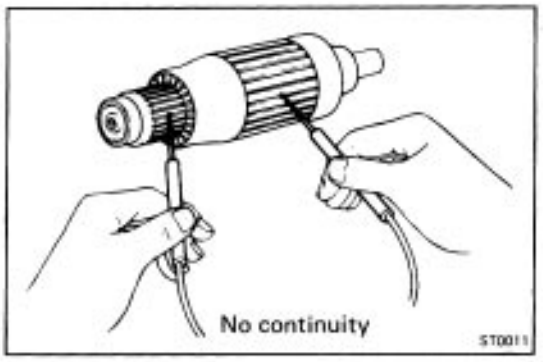

INSPECTION OF STARTER

Armature Coil

1. INSPECT THAT COMMUTATOR IS NOT GROUNDED

Using an ohmmeter, check that there is no continuity between the commutator and armature coil core.

If there is continuity, replace the armature.

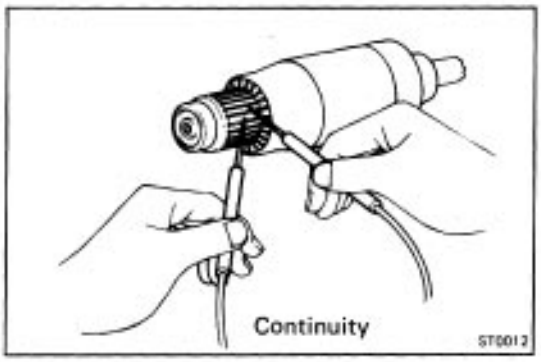

2. INSPECT COMMUTATOR FOR OPEN CIRCUIT

Using an ohmmeter, check for continuity between the segments of the commutator.

If there is no continuity between any segment, replace the armature.

Commutator

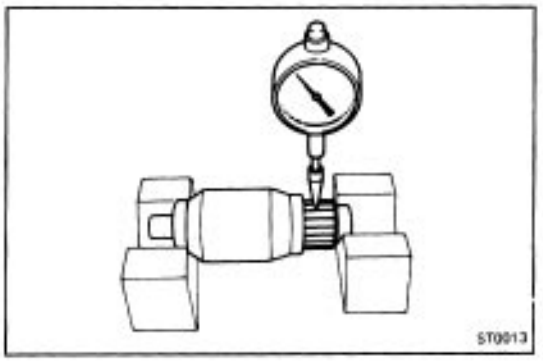

1. INSPECT COMMUTATOR FOR DIRTY AND BURNT SURFACES

If the surface is dirty or burnt, correct with sandpaper (No. 400) or a lathe.

2. INSPECT COMMUTATOR CIRCLE RUNOUT

Maximum circle runout: 0.05 mm (0.0020 in.)

If the circle runout is greater than the maximum, correct with a lathe.

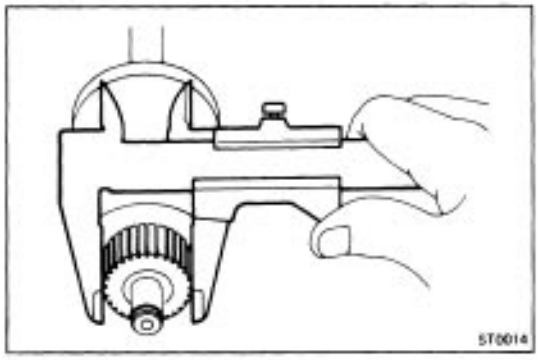

3. MEASURE DIAMETER OF COMMUTATOR

Standard diameter: 30 mm (1.18 in.)

Minimum diameter: 29 mm (1.14 in.)

If the diameter of the commutator is less than the minimum, replace the armature.

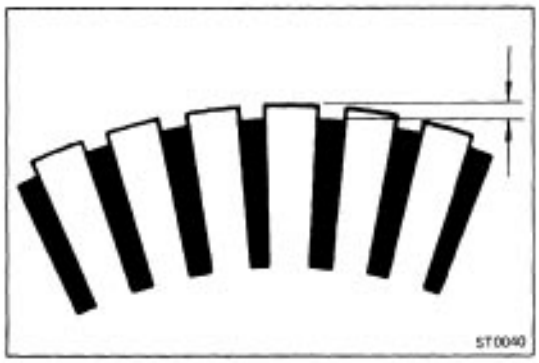

4. INSPECT UNDERCUT DEPTH

Check that the undercut depth is clean and free of foreign material. Smooth out the edge.

Standard undercut depth: 0.6 mm (0.024 in.)

Minimum undercut depth: 0.2 mm (0.008 in.)

If the undercut depth is less than the minimum, correct it with a hacksaw blade.

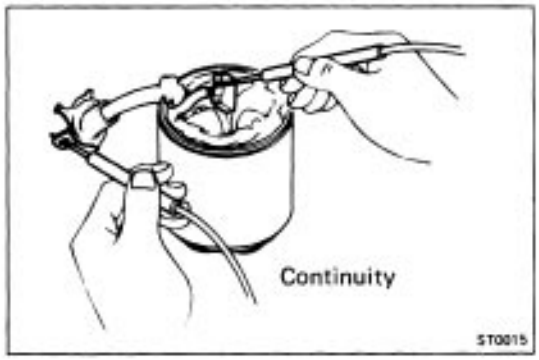

Field Frame (Field Coil)

1. INSPECT FIELD COIL FOR OPEN CIRCUIT

Using an ohmmeter, check for continuity between the lead wire and field coil brush lead.

If there is no continuity, replace the field frame.

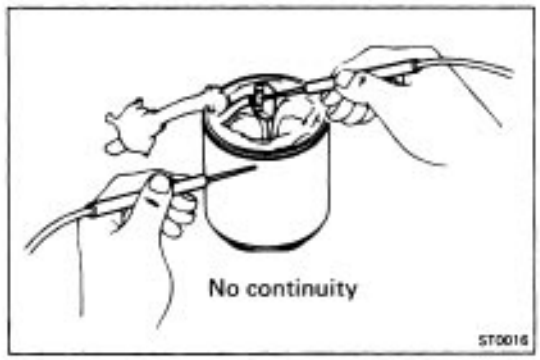

2. INSPECT THAT FIELD COIL IS NOT GROUNDED

Using an ohmmeter, check for no continuity between the field coil end and field frame.

If there is continuity, replace the field frame.

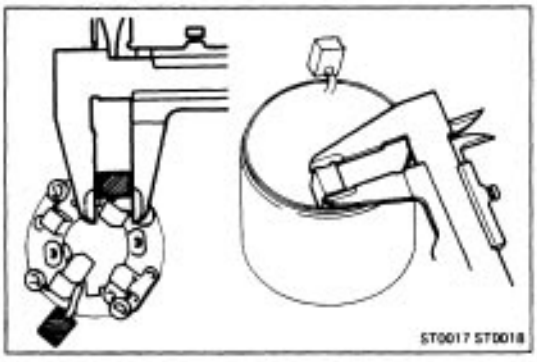

Brushes

MEASURE BRUSH LENGTH

If length is less than minimum, replace the brush and dress with an emery cloth.

Standard length: 1.0 kW 13.5 mm (0.531 in.)

1.4 kW 15.5 mm (0.610 in.)

Minimum length: 1.0 kW 8.5 mm (0.335 in.)

1.4 kW 8.5 mm (0.335 in.)

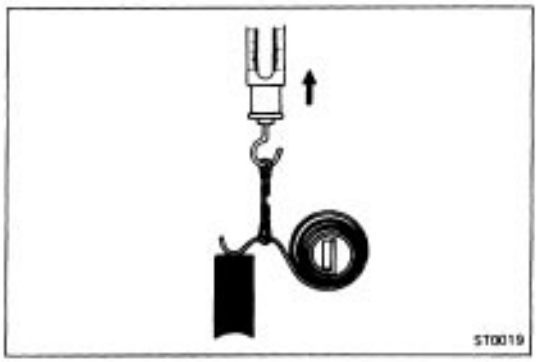

Brush Spring

MEASURE BRUSH SPRING LOAD WITH A PULL SCALE

Spring installed load: 1,785 – 2,415 g

(3.9–5.31b, 18–24N)

If the reading is below standard, replace the brush spring.

HINT: Take the pull scale reading the instant the brush spring separates from the brush.

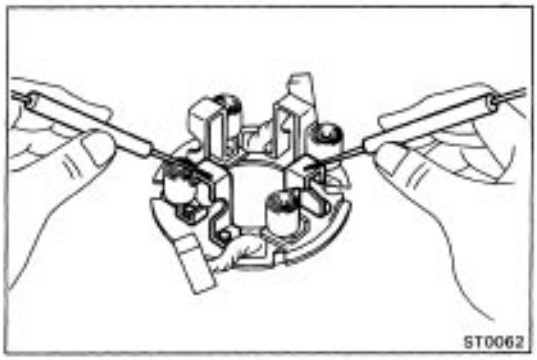

Brush Holder

INSPECT INSULATION OF BRUSH HOLDER

Using an ohmmeter, check for continuity between the positive and negative brush holders.

If there is continuity, repair or replace the brush holder.

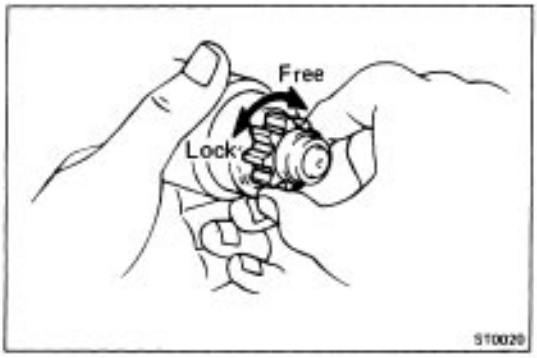

Clutch and Gears

1. INSPECT GEAR TEETH

Check the gear teeth on the pinion gear, idler gear and clutch assembly for wear or damage. Replace if damaged.

If damaged, also check the flywheel ring gear for wear or damage.

2. INSPECT CLUTCH

Rotate the pinion clockwise and check that it turns freely:

Try to rotate the pinion counterclockwise and check that it locks.

Bearings

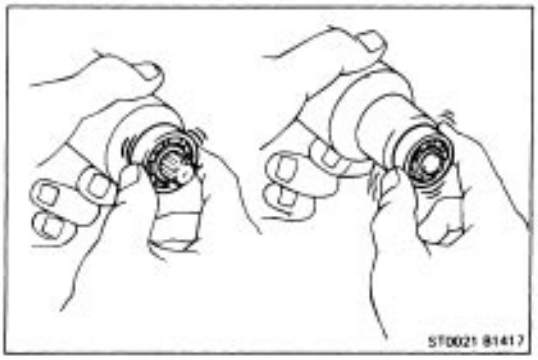

1. INSPECT BEARINGS

Turn each bearing by hand while applying inward force.

If resistance is felt or if the bearing sticks, replace the bearing.

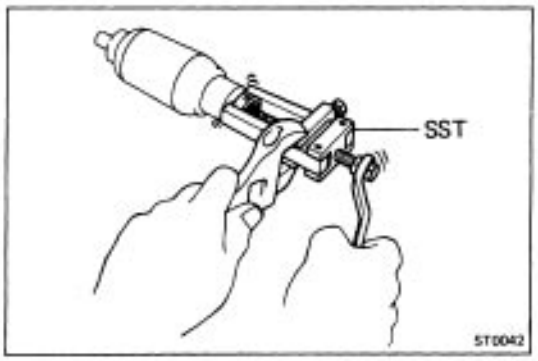

2. IF NECESSARY, REPLACE BEARINGS

(a) Using SST, remove the bearing from the armature shaft.

(b) Using SST, remove the other bearing on the opposite side.

SST 09286–46011

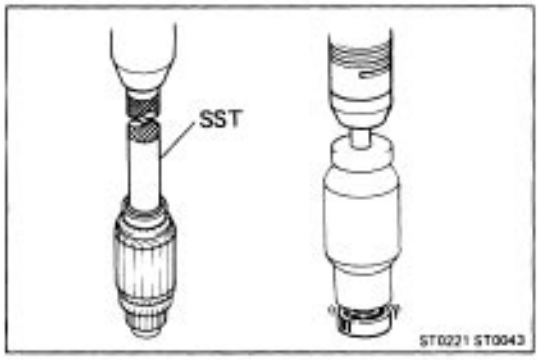

(c) Using SST and a press, press a new large bearing onto the shaft.
SST 1.0 kW 09285–76010
1.4 kW 09201–41020
(d) Using a press, install a new small bearing onto the shaft.

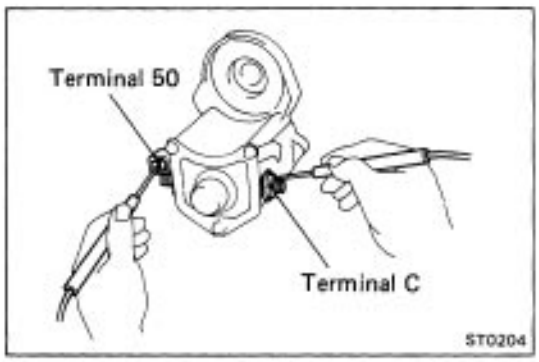

Magnetic Switch

1. PERFORM PULL–IN COIL OPEN CIRCUIT TEST

Using an ohmmeter, check for continuity between terminal 50 and terminal C.
If there is no continuity, replace the magnetic switch.

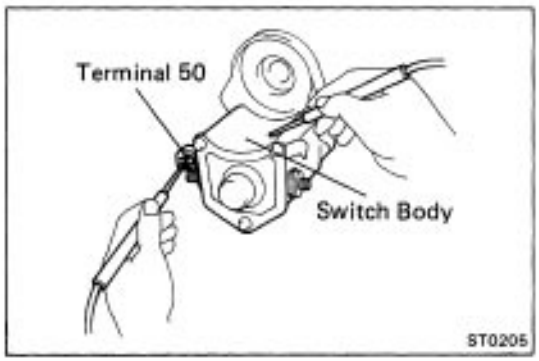

2. PERFORM HOLD–IN COIL OPEN CIRCUIT TEST

Using an ohmmeter, check for continuity between terminal 50 and the switch body.
If there is no continuity, replace the magnetic switch.

ASSEMBLY OF STARTER

(See page ST–4, 5)

HINT: Use high–temperature grease to lubricate the bearings and gears when assembling the starter.

1. PLACE ARMATURE INTO FIELD FRAME

Apply grease to the armature bearings and insert the armature into the field frame.

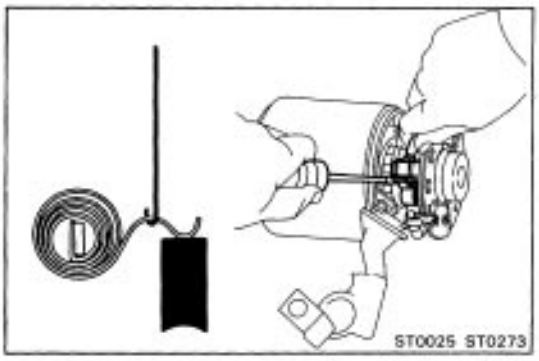

2. INSTALL BRUSH HOLDER AND BRUSHES

(a) Using a screwdriver or steel wire, hold the brush spring back, and install the brush into the brush holder. Install four brushes.

HINT: Make sure that the positive lead wires are not grounded.

(b) Place the O–ring on the field frame (1.4 kW type only).

(c) Install the end cover to the field frame.

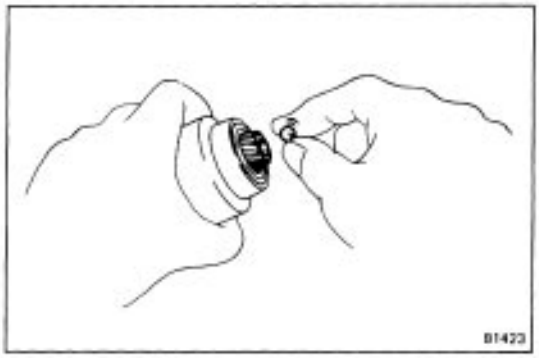

3. INSERT STEEL BALL INTO CLUTCH SHAFT HOLE

Apply grease to the ball and spring, and insert them into the clutch shaft hole.

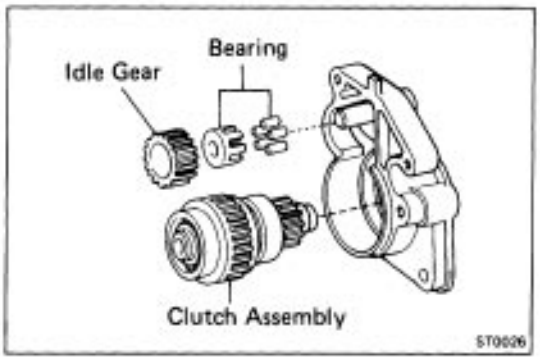

4. INSTALL GEARS AND CLUTCH ASSEMBLY TO STARTER HOUSING

[1.0 kW type]

(a) Apply grease to the gear and clutch assembly.

(b) Place the clutch assembly, idler gear and bearing in the starter housing.

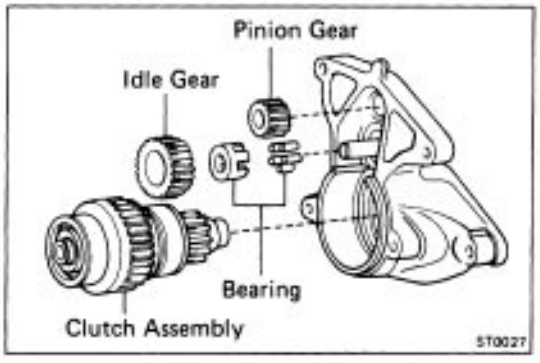

[1.4 kW type]

(a) Apply grease to the gears and clutch assembly.

(b) Place the clutch assembly, idler gear, bearing and pinion gear in the starter housing.

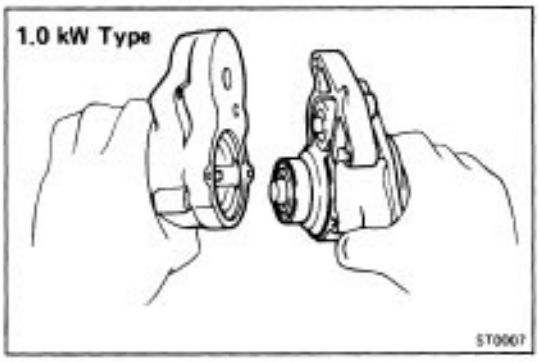

5. INSTALL STARTER HOUSING

(a) Insert the spring into the clutch shaft hole.

(b) Place the starter housing on the magnetic switch and install the two screws.

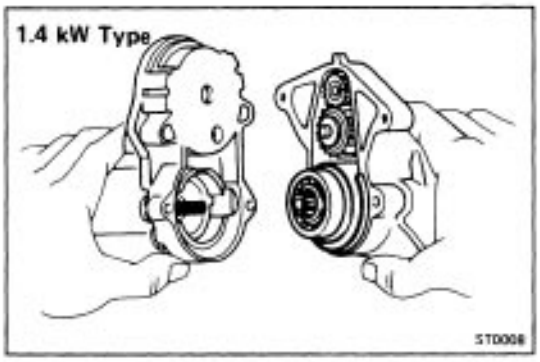

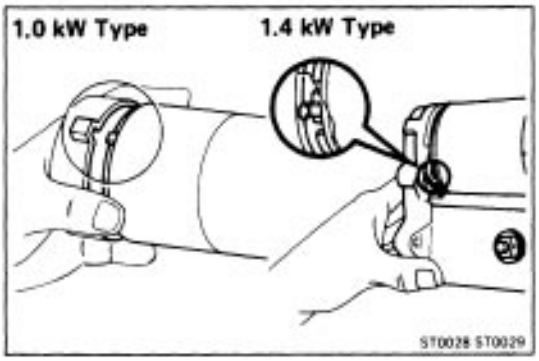

6. INSTALL FIELD FRAME WITH ARMATURE IN MAGNETIC SWITCH ASSEMBLY

(a) (1.4 kW type)

Place the O–ring on the field frame.

(b) Match the protrusion of the field frame with the magnetic switch assembly.

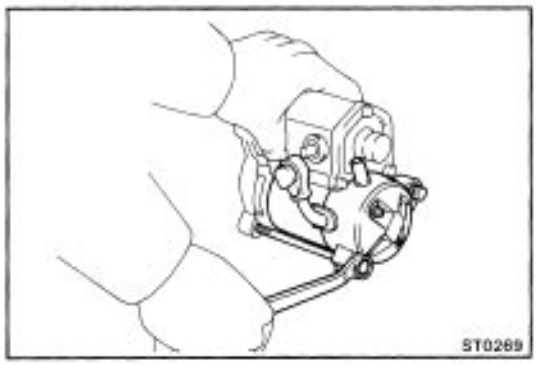

(c) Install the two through bolts.

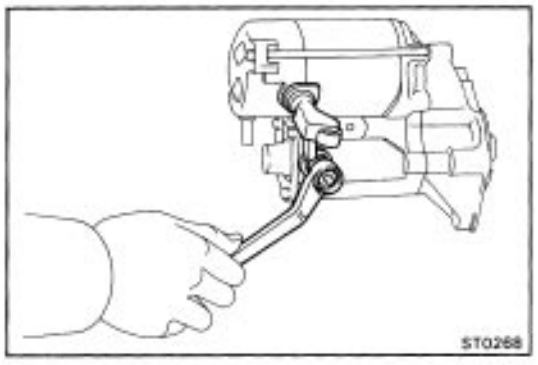

(b) Connect the lead wire to the terminal on the magnetic switch assembly with the nut.

7. (4A–GE)

INSTALL HEAT INSULATOR

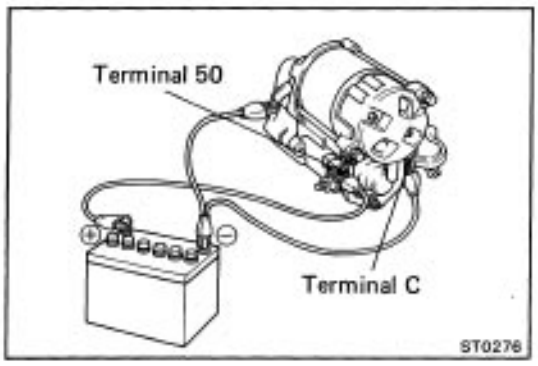

PERFORMANCE TEST OF STARTER

NOTICE: These tests must be performed within 3 to 5 seconds to avoid burning out the coil.

1. PERFORM PULL–IN TEST

(a) Disconnect the field coil lead from terminal C.

(b) Connect the battery to the magnetic switch as shown.

Check that the plunger moves outward.

If the plunger does not move, replace the magnetic switch.

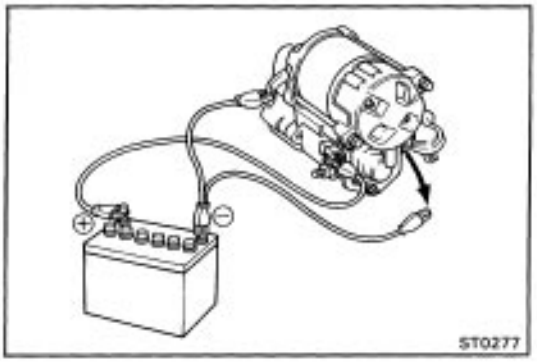

2. PERFORM HOLD–IN TEST

While connected as above with the plunger out, disconnect the negative lead from terminal C. Check that the plunger remains out.

If the plunger returns inward, replace the magnetic switch.

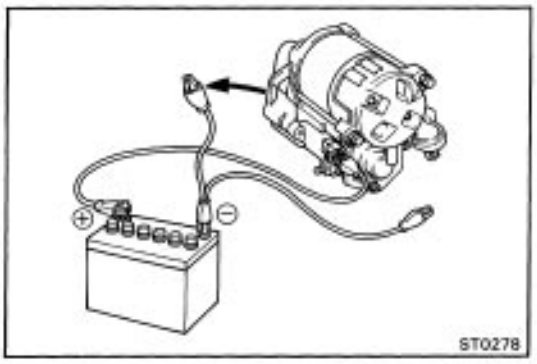

3. INSPECT PLUNGER RETURN

Disconnect the negative lead from the switch body.

Check that the plunger returns inward.

If the plunger does not return, replace the magnetic switch.

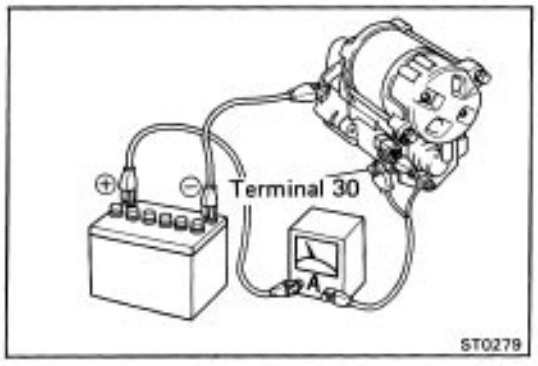

4. PERFORM NO–LOAD PERFORMANCE TEST

(a) Connect the battery and ammeter to the starter as shown.

(b) Check that the starter rotates smoothly and steadily with the pinion moving out. Check that the ammeter reads the specified current. (At more than 3,000 rpm (1.0 kW) or 3,500 rpm (1.4 kW))

Specified current: Less than 90 A at 11.5 V

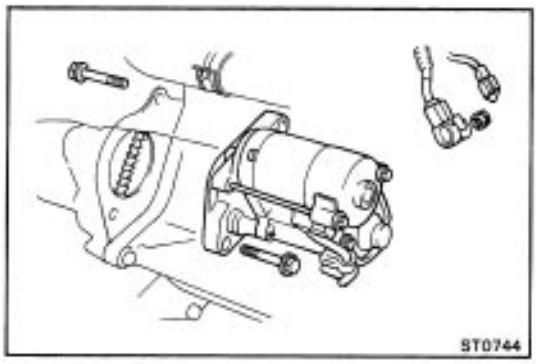

INSTALLATION OF STARTER

(4A–FE)

1. INSTALL STARTER

(a) Connect the connector to the terminal on the magnetic switch. Connect the cable from the battery to the terminal on the switch, and install the nut.

(b) Place the starter in the flywheel bellhousing. Install and torque the two bolts.

Torque: 400 kg–cm (29 ft–lb, 39 N–m)

2. INSTALL AIR CLEANER ASSEMBLY

(See step 27 on page EM–169**)**

3. CONNECT CABLE TO NEGATIVE TERMINAL OF BATTERY

Check that the engine starts.

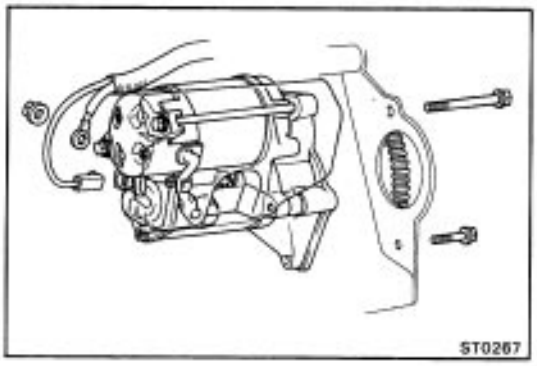

(4A–GE)

1. INSTALL STARTER

(a) Connect the connector to the terminal on the magnetic switch. Connect the cable from the battery to the terminal on the switch, and install the nut.

(b) Place the starter in the flywheel bellhousing. Install and torque the two bolts.

Torque: 400 kg–cm (29 ft–lb, 39 N–m)

2. INSTALL ELECTRIC COOLING FAN (See page CO–23)

3. INSTALL FRONT EXHAUST PIPE

(See step 11 on page EM–166**)**

4. INSTALL RH AND LH ENGINE UNDER COVERS

5. CONNECT CABLE TO NEGATIVE TERMINAL OF BATTERY

Check that the engine starts.

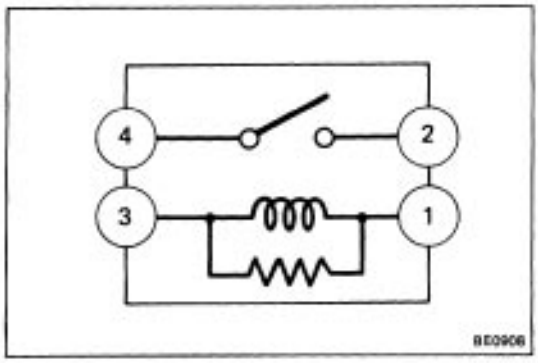

CLUTCH STARTER RELAY (M T)

INSPECTION OF CLUTCH STARTER RELAY

INSPECT CLUTCH STARTER RELAY

HINT: The relay located in the No.2 junction block of the engine compartment.

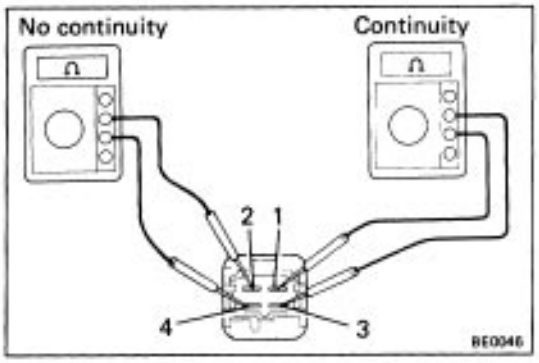

Inspect Relay Continuity

(a)Using an ohmmeter, check that there is continuity between terminals 1 and 3.

(b) Check that there is no continuity between terminals 2 and 4.

If continuity is not as specified, replace the relay.

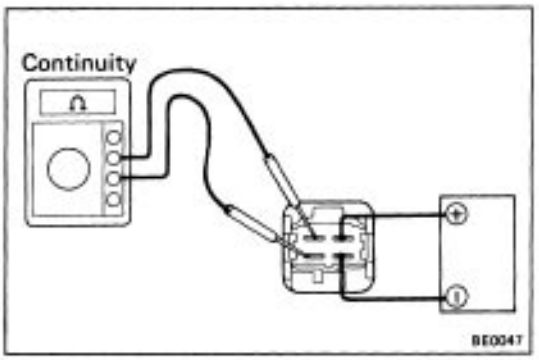

Inspect Relay Operation

(a) Apply battery voltage across terminals 1 and 3.

(b) Check that there is continuity between terminals 2 and 4.

If operation is not as specified, replace the relay.

CLUTCH START SWITCH (M T)

(See page CL–4**)**